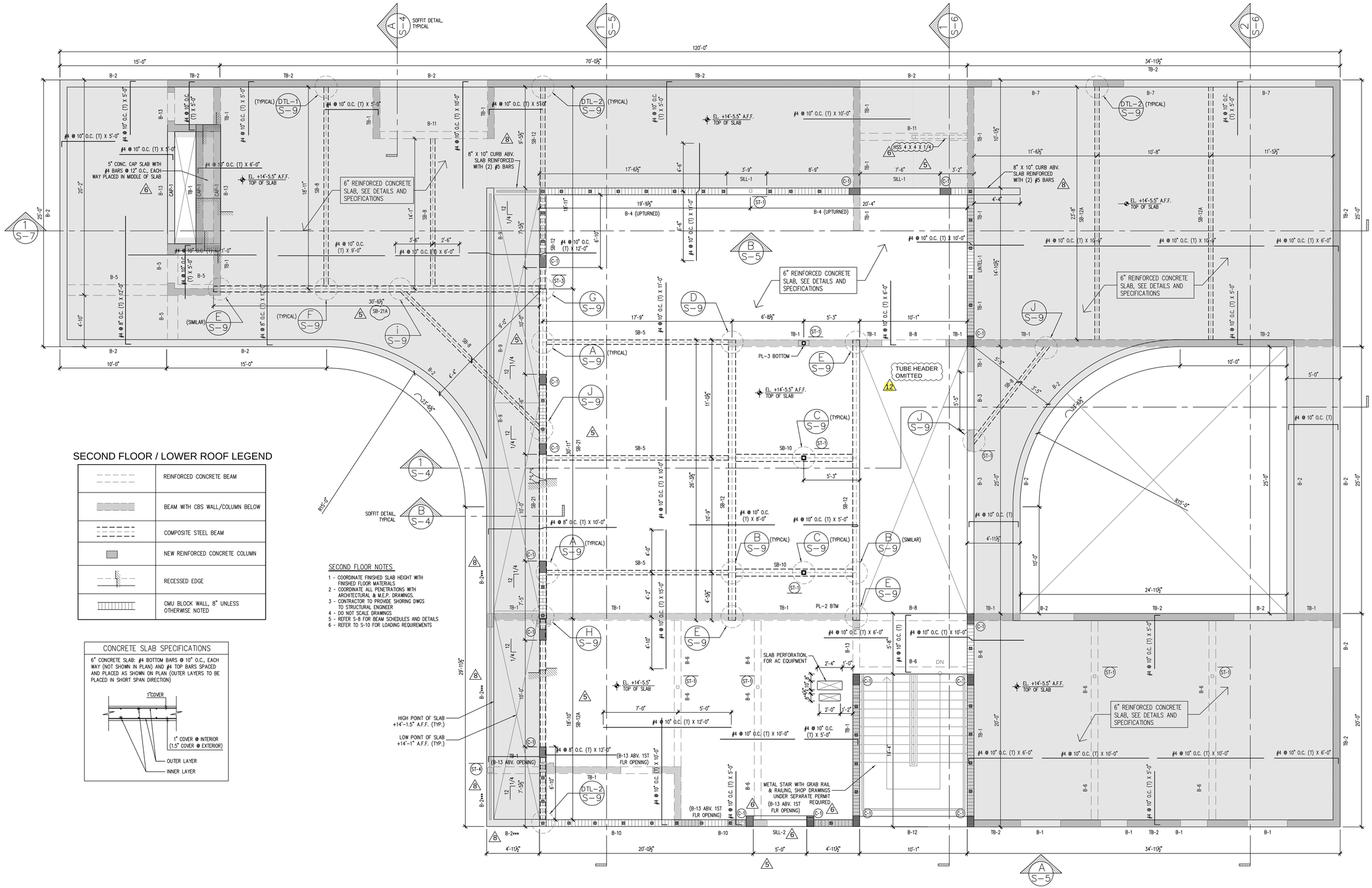

SECOND FLOOR / LOWER ROOF LEGEND

	REINFORCED CONCRETE BEAM
	BEAM WITH CBS WALL/COLUMN BELOW
	COMPOSITE STEEL BEAM
	NEW REINFORCED CONCRETE COLUMN
	RECESSED EDGE
	CMU BLOCK WALL, 8" UNLESS OTHERWISE NOTED

CONCRETE SLAB SPECIFICATIONS

6" CONCRETE SLAB: #4 BOTTOM BARS @ 10" O.C., EACH WAY (NOT SHOWN IN PLAN) AND #4 TOP BARS SPACED AND PLACED AS SHOWN ON PLAN (OUTER LAYERS TO BE PLACED IN SHORT SPAN DIRECTION)

SECOND FLOOR NOTES

1 - COORDINATE FINISHED SLAB HEIGHT WITH FINISHED FLOOR MATERIALS
2 - COORDINATE ALL PENETRATIONS WITH ARCHITECTURAL & M.E.P. DRAWINGS.
3 - CONTRACTOR TO PROVIDE SHORING DWGS TO STRUCTURAL ENGINEER
4 - DO NOT SCALE DRAWINGS
5 - REFER S-8 FOR BEAM SCHEDULES AND DETAILS
6 - REFER TO S-10 FOR LOADING REQUIREMENTS

NORTH

SECOND FLOOR PLAN

SCALE: 1/4" = 1'-0"

AlexAllen Studio

AlexAllen Studio Architects PLLC

302 3rd Avenue
Brooklyn, NY 11215
T: (919) 909-0405

info@alexallenstudio.com
www.alexallenstudio.com

PHASE:	REVISION No.	DATE:
100% Issued for Permit		03/18/2022
Owner Revision	1	12/12/2022
Owner Revision	2	05/04/2023
Owner Revision Beam Adjustment	3	08/23/2023
Owner Revision Beam Adjustment	4	08/23/2023
Owner Front Door Rev.	5	04/10/2026

100% ISSUED FOR PERMIT

THE STRUCTURAL CONSULTING
9719 South Dixie Hwy. #2
Miami, FL 33156
Ph: 305.609.3652
CA 28548

This item has been digitally signed and sealed by:

THOMAS MOE

on the date below to the seal. Printed copies of this document are not considered signed and sealed and the signature must be verified on any electronic copies.

THOMAS HUGO MOE
LICENSE
No. 63863
STATE OF FLORIDA
PROFESSIONAL ENGINEER

PROJECT
PINECREST RESIDENCE
12020 SW 77th Avenue
Pinecrest, FL 33156

OWNER
KEVIN HUBER & MILA KHOMIAK
12020 SW 77th Avenue
Pinecrest, FL 33156

TITLE
SECOND FLOOR PLAN

SCALE | PROJECT NUMBER

SHEET
S-2

DATE
03/18/2022

DRAWING NUMBER

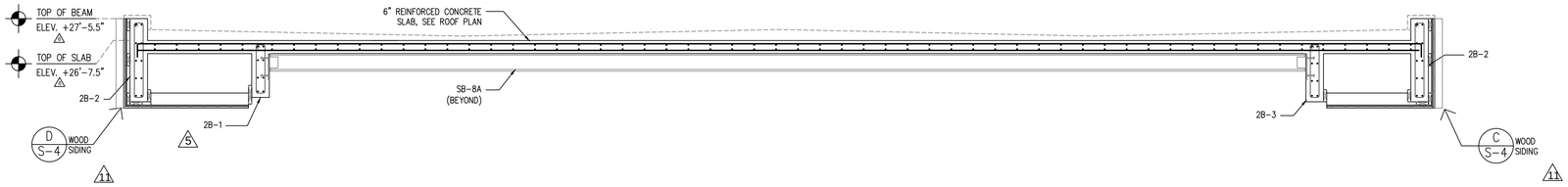

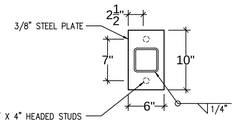

E S-4 TUBE CONNNECTION DETAIL
SCALE: 1" = 1'-0"

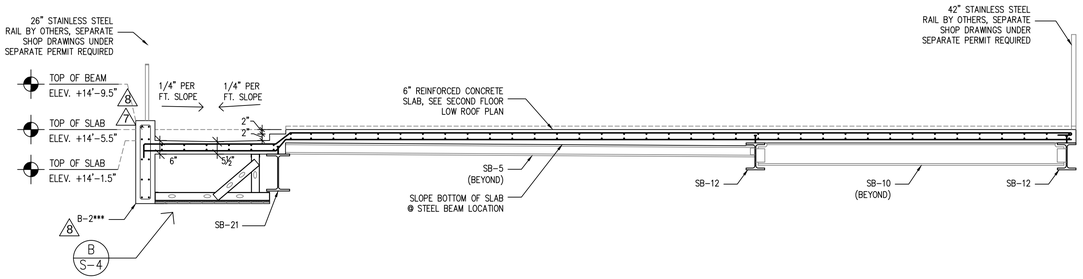

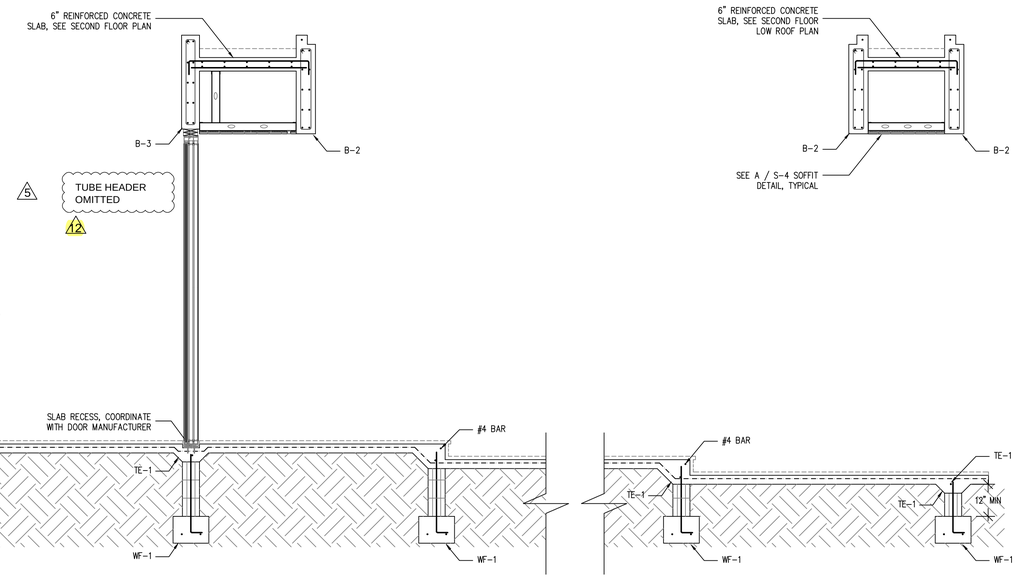

1 S-4 BUILDING SECTION
SCALE: 3/8" = 1'-0"

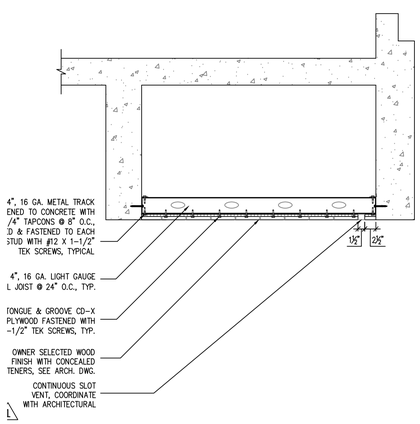

A S-4 SOFFIT DETAIL @ FIRST FLOOR, TYPICAL
SCALE: 3/4" = 1'-0"

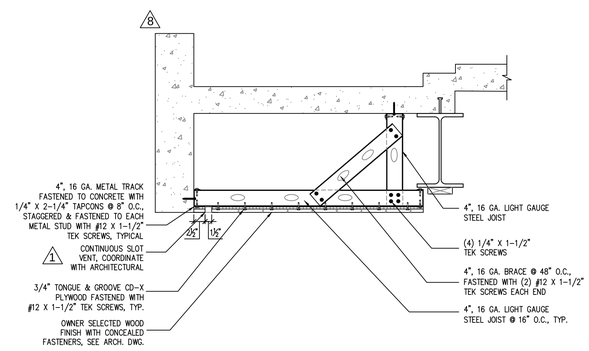

B S-4 SOFFIT DETAIL @ SLIDING GLASS DOOR, TYPICAL
SCALE: 3/4" = 1'-0"

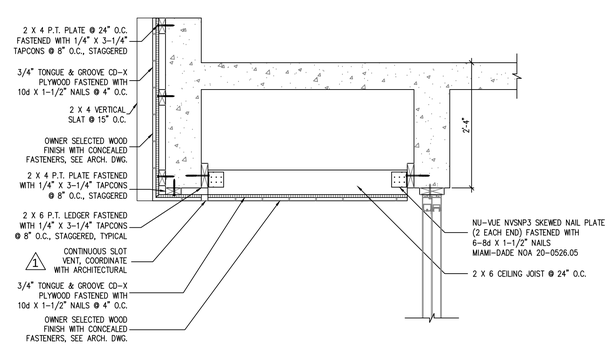

C S-4 UPPER ROOF SOFFIT DETAIL @ WINDOW, TYPICAL
SCALE: 3/4" = 1'-0"

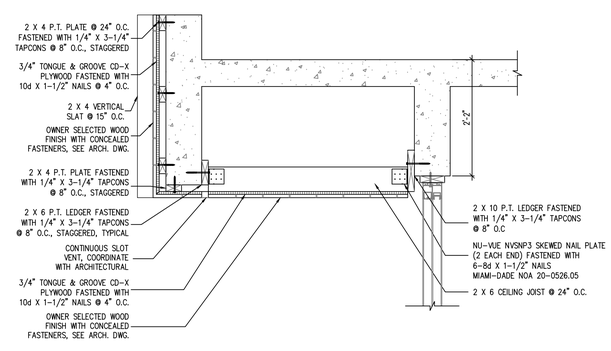

5
D S-4 ROOF SOFFIT & WOOD SIDING DETAIL
SCALE: 3/4" = 1'-0"

AlexAllen Studio

AlexAllen Studio Architects PLLC

302 3rd Avenue
Brooklyn, NY 11215
T: (919) 909-0405

info@alexallenstudio.com
www.alexallenstudio.com

PHASE:	REVISION No.	DATE:
100% Issued for Permit		03/18/2022
Revision #1	1	05/02/2022
Owner Revision	2	12/12/2022
Owner Revision	3	05/04/2023
Owner Revision Beam Adjustment	4	07/24/2023
Owner Revision Beam Adjustment	5	08/23/2023
Bldg Dept Comments	6	01/21/2026
Owner Front Door Rev.	7	04/13/2026

100% ISSUED FOR PERMIT

THE STRUCTURAL CONSULTING
9719 South Dixie Hwy. #2
Miami, FL 33156
Ph: 305.609.3652
CA 28548

This item has been digitally signed and sealed by:
THOMAS MOE
Digitally signed by THOMAS MOE
DN: C=US, E=TMOE@THECONSULTINGSTUDIO.COM, O=THE STRUCTURAL CONSULTING, CN=THOMAS MOE
Reason: I am the author of this document
Date: 2026.04.14 12:00:15-04'00'
on the date below to the seal. Printed copies of this document are not considered signed and sealed and the signature must be verified on any electronic copies.

THOMAS HUGO MOE
LICENSE
No. 63863
STATE OF
FLORIDA
PROFESSIONAL ENGINEER

PROJECT

PINECREST RESIDENCE
12020 SW 77th Avenue
Pinecrest, FL 33156

OWNER

KEVIN HUBER & MILA KHOMIAK
12020 SW 77th Avenue
Pinecrest, FL 33156

TITLE

BUILDING SECTION & SOFFIT DETAILS

SCALE	PROJECT NUMBER

SHEET

S-4

DATE	DRAWING NUMBER
03/18/2022	