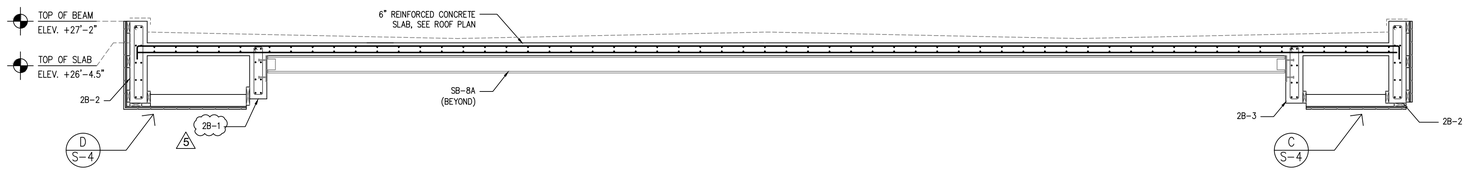

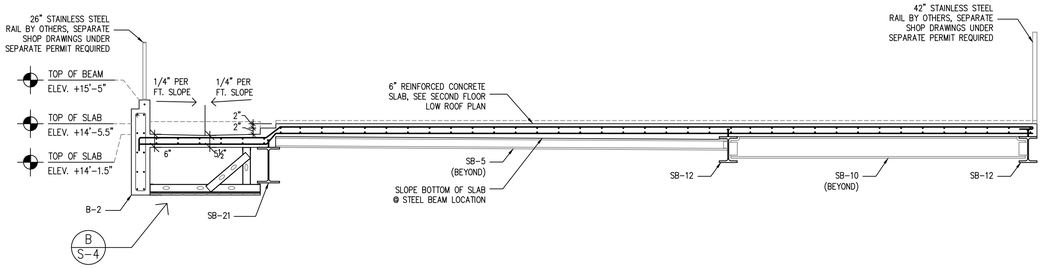

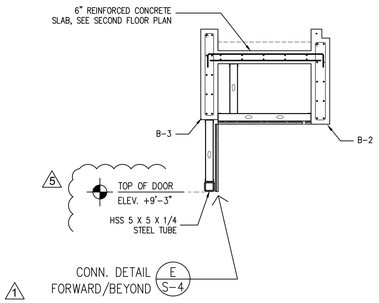

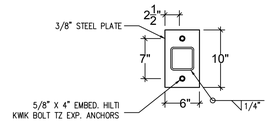

E
S-4 TUBE CONNNECTION DETAIL
SCALE: 1" = 1'-0"

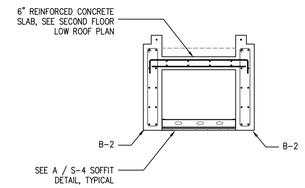

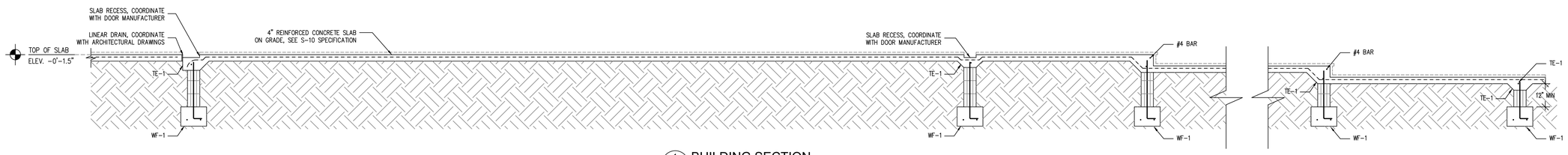

1
S-4 BUILDING SECTION
SCALE: 3/8" = 1'-0"

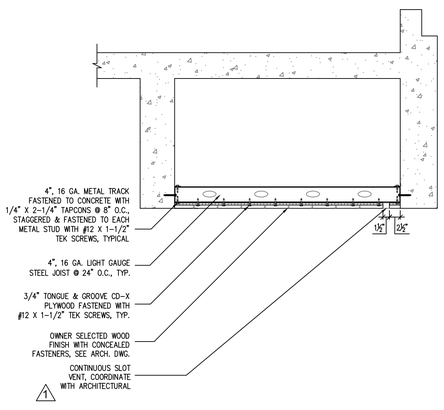

A
S-4 SOFFIT DETAIL @ FIRST FLOOR, TYPICAL
SCALE: 3/4" = 1'-0"

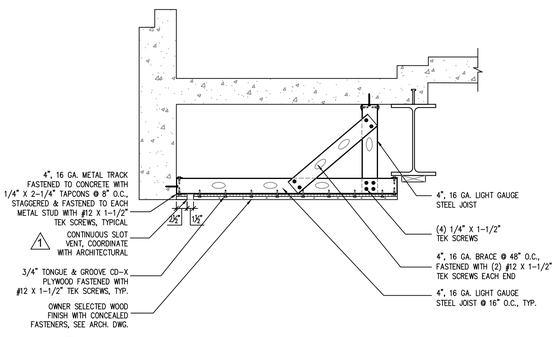

B
S-4 SOFFIT DETAIL @ SLIDING GLASS DOOR, TYPICAL
SCALE: 3/4" = 1'-0"

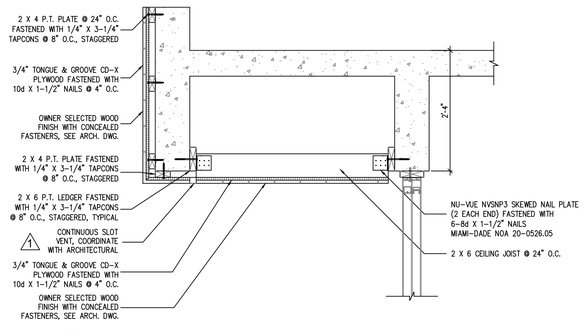

C
S-4 UPPER ROOF SOFFIT DETAIL @ WINDOW, TYPICAL
SCALE: 3/4" = 1'-0"

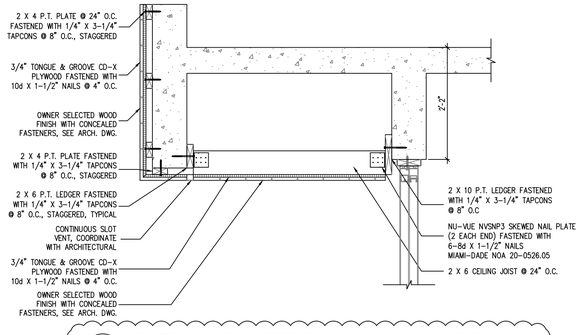

5
D
S-4 UPPER ROOF SOFFIT DETAIL @ DOOR, TYPICAL
SCALE: 3/4" = 1'-0"

AlexAllen Studio

AlexAllen Studio Architects PLLC

302 3rd Avenue
Brooklyn, NY 11215
T: (919) 909-0405

info@alexallenstudio.com
www.alexallenstudio.com

PHASE:	REVISION No.	DATE:
100% Issued for Permit	-	03/18/2022
Revision #1	1	05/02/2022
Owner Revision	2	12/12/2022
-	-	-
-	-	-

100% ISSUED FOR PERMIT

THE STRUCTURAL CONSULTING
9719 South Dixie Hwy, #2
Miami, FL 33156
Ph: 305.609.3652
CA 28548

THOMAS MOE
Digitally signed by THOMAS MOE
Date: 2023.01.04 13:04:54 -05'00'

SEAL

THOMAS HUGO MOE
LICENSE
No. 63863
STATE OF FLORIDA
PROFESSIONAL ENGINEER

PROJECT

PINECREST RESIDENCE
12020 SW 77th Avenue
Pinecrest, FL 33156

OWNER

KEVIN HUBER & MILA KHOMIAK
12020 SW 77th Avenue
Pinecrest, FL 33156

TITLE

BUILDING SECTION
& SOFFIT DETAILS

SCALE	PROJECT NUMBER

SHEET

S-4

DATE	DRAWING NUMBER
03/18/2022	