GARY MATZNER PARK

ENGINEERING PLANS
6610 N. KENDALL DR.
VILLAGE OF PINECREST
MIAMI-DADE COUNTY, FLORIDA

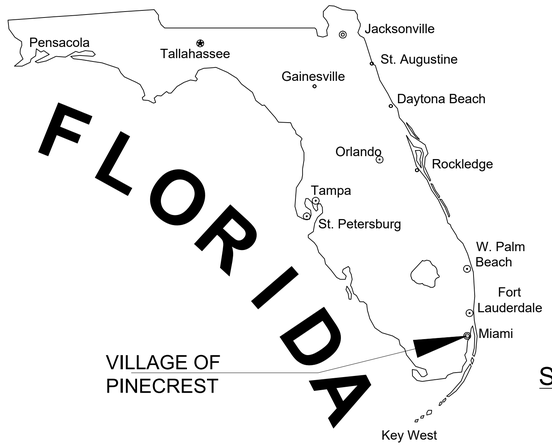

SITE LOCATION

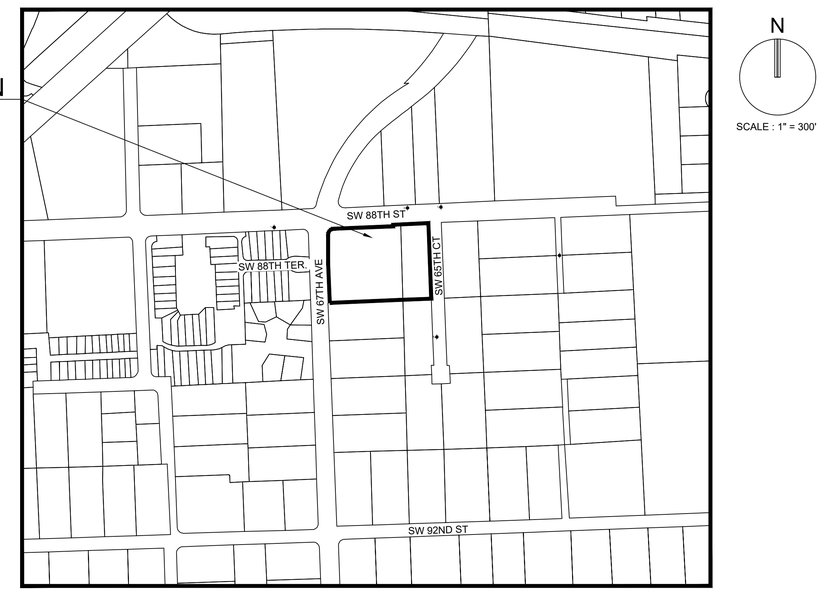

LOCATION MAP
SECTION 01, TOWNSHIP 55S, RANGE 40E
FOLIO #20-5001-000-0780, #20-5001-000-1180

SHEET IDENTIFICATON	SHEET TITLE
GI-000	COVER SHEET
GI-001	LEGEND AND ABBREVIATIONS
GI-002	GENERAL CONSTRUCTION NOTES
GI-003	CONSTRUCTION SPECIFICATIONS
~~V-0XX~~	~~TOPOGRAPHIC SURVEY~~
CG-101	EROSION CONTROL PLAN
CG-501	EROSION CONTROL DETAILS
CD-101	DEMOLITON PLAN
CP-101	PAVING, GRADING, AND DRAINAGE PLAN
CP-201	PAVING, GRADING, AND DRAINAGE PROFILES
CP-301	PAVING AND GRADING SECTIONS
CP-501 & CP-502	PAVING, GRADING, AND DRAINAGE DETAILS
CU-101	WATER AND SEWER PLAN
CU-201	WATER AND SEWER PROFILES
CU-501 & CU-502	WATER AND SEWER DETAILS
CM-101	PAVEMENT MARKING AND SIGNAGE PLAN
CM-501	PAVEMENT MARKING AND SIGNAGE DETAILS

LAND DESCRIPTION:

PARCEL 1:

THE NORTHWEST QUARTER (NW ¼) OF THE NORTHWEST QUARTER (NW ¼) OF THE NORTHWEST QUARTER (NW ¼) OF THE NORTHWEST QUARTER (NW ¼) OF SECTION ONE (1), TOWNSHIP 55 SOUTH, RANGE 40 EAST, LESS THE NORTH 40 FEET THEREOF AND LESS THE WEST 40 FEET THEREOF, LYING AND BEING IN MIAMI-DADE COUNTY, FLORIDA,

PARCEL 2:

THE WEST ½ OF THE NORTHEAST QUARTER (NE ¼) OF THE NORTHWEST QUARTER (NW ¼) OF THE NORTHWEST QUARTER (NW ¼) OF THE NORTHWEST QUARTER (NW ¼) OF SECTION 1, TOWNSHIP 55 SOUTH, RANGE 40 EAST, LESS THE EAST 25 FEET OF SAID TRACT AND LESS THE NORTH 35 FEET THEREOF, LYING AND BEING IN MIAMI-DADE COUNTY, FLORIDA.

ALL ELEVATIONS SHOWN ON THESE PLANS ARE BASED ON NGVD 1929 DATUM

FEMA FLOOD ZONE:

THE PROPERTY IS LOCATED WITHIN FLOOD ZONE X WITH NO BASE FLOOD ELEVATION, AS SHOWN ON F.I.R.M. NUM. 12086C0458L, BEARING A MAP EFFECTIVE DATE OF 09/11/2009.

This item has been digitally signed and sealed by **Thomas F. Donahue**, P.E. on the date adjacent to the seal.

THOMAS F. DONAHUE
LICENSE
No. 60529
STATE OF
FLORIDA
PROFESSIONAL ENGINEER

Signature must be verified on any electronic copies.

2026.03.04 08:26:07-05'00'
THOMAS F. DONAHUE, P.E.
FLORIDA REG. NO. 60529
(FOR THE FIRM)

KEITH
301 East Atlantic Boulevard
Pompano Beach, Florida 33060-6643
(954) 788-3400
Florida Engineering Business License: CA7928
Florida Surveyor and Mapper Business License: LB6860
Florida Landscape Architecture Business License: LC26000457

THESE PLANS MAY HAVE BEEN REDUCED IN SIZE BY REPRODUCTION. THIS MUST BE CONSIDERED WHEN OBTAINING SCALED DATA.

811 TICKET No. 349305403

Sunshine811
Call 811 or visit sunshine811.com two full business days before digging to have buried facilities located and marked.
Check positive response codes before you dig!

PREPARED FOR: VILLAGE OF PINECREST
PARKS & RECREATION
12645 PINECREST PARKWAY
PINECREST, FL 33156

PROJECT No. 13861.00 MARCH, 2026

Drawing name: K:\13861.00 - Gary Matzner Park Design - Village of Pinecrest\Engineering\Cadd\13861.00-GI-000.dwg Layout Name: GI-000 Plotted by: hsilva Plotted on: Mar 03, 2026 - 3:37pm

GENERAL SYMBOLS

SYMBOL	DESCRIPTION
A / CP-301	PROPOSED SECTION MARKER INDICATING THE SECTION LETTER AND THE SHEET ON WHICH THE SECTION VIEW APPEARS.
22 / C-05	DETAIL REFERENCE CALL OUT INDICATING THE DETAIL NUMBER AND THE SHEET ON WHICH THE DETAIL VIEW APPEARS.
1	REVISION TRIANGLE NUMBER
	MISC BREAK LINES
PIC#	PHOTO LOCATION AND CORRESPONDING PICTURE NUMBER.
N: 623025.4322 E: 850262.1786	COORDINATE VALUES SHOWN ON PROPOSED IMPROVEMENTS ARE RELATIVE TO THE COORDINATE VALUES INDICATED ON THE RIGHT-OF-WAY, PROPERTY CORNERS OR REFERENCE MONUMENT

GEN SITE & PMS

SYMBOL	DESCRIPTION
	PAVEMENT MARKING ARROWS
	STOP BAR
	ADA PARKING
	CONCRETE CAR STOP
	BICYCLE
	BICYCLE RACK
	AUTOMOBILE
	POST MOUNTED SIGNS 1,2, DOUBLE POST & 4 WAY
33	PARKING SPACE NUMBER
BL CL PL FL ML	BASELINE, CENTER, PROPERTY, FLOW & MONUMENT LINE
	BUILDING ACCESS (ADA) / (NON-ADA)

PAVING & GRADING

SYMBOL	DESCRIPTION
0.04% 0.04%	FLOW DIRECTIONAL ARROW
6"	ELEVATION CHANGE
5.00 5.00	MAJOR / MINOR CONTOUR ELEVATION
13.56	GRADE ELEVATION
13.56 22.00	TOP OF CURB / PAVEMENT ELEVATION
MEG	MATCH EXISTING GRADE
	SLOPE BANK
A-1 24'	DRIVEWAY TURNOUT IDENTIFICATION (FDOT INDEX 522-003) W/ DRIVE WIDTH
CR-?	SIDEWALK CURB RAMP (PER FDOT INDEX 522-002)
	SEAWALL

UTILITY PIPES

SYMBOL	DESCRIPTION
	PIPE FITTINGS: TEE, 90, 45, 22.5, 11.2, CAP,
	CAP W/FVO, REDUCER, VERTICAL, PLUG
	VALVES: GATE, BUTTERFLY, DOUBLE BTRFLY, BFP, DDCV, VACUUM BREAKER
MBO ABO ARV	MAN/AUTO BLOWOFF, ARV, PIV, FLUSH VLV, CORP STOP
SP# HYD FDC WW	SAMPLE PNT, HYDRANT, FDC, WATER WELL
	TAPPING SADDLE
SD	EXFILTRATION TRENCH
W	PIPE CASING
V	VENT PIPE BOX
C-X 22	UTILITY CROSSING

HATCH PATTERNS

SYM	DESCRIPTION	SYM	DESCRIPTION
	CONCRETE AREA		BRICK PAVERS
	JOGGING PATH		SOIL TRACKING PREVENTION DEVICE
	PAVEMENT AREA		SAND (DETAIL / ELEVATION)
	BUILDING HATCH		EARTH (DETAIL / ELEVATION)
	MILLING AND RESURFACING		GRAVEL (DETAIL / ELEVATION)
	DETECTABLE WARNING PER FLORIDA CODE		GRASS AREA
	DEMOLITION AREA		ADA STRIPING

UTILITY STRUCTURES

SYMBOL	DESCRIPTION
CB	FDOT C,D,E,F,G & FABRIC CATCH BASIN
CB D S	NON-FDOT ROUND CB'S & MANHOLES, MDC STRUCTURE
	FDOT CURB INLETS TYPE1-TYPE10
	TRENCH DRAIN
	PIPE CULVERT - MITERED END SECTION
	STRAIGHT ENDWALL
PS#	PUMP STATION LOCATION AND NUMBER
	GREASE TRAP SINGLE AND DOUBLE
	SEPTIC TANK
	SEPTIC DRAIN FIELD
	DRAINAGE WELL, DRAIN C.B., CONTROL STRUCTURE
MW	MONITORING WELL
WELL	WATER WELL
M	METER BOX WATER AND IRRIGATION
YD DD DD	YARD DRAIN / 9" DECK DRAIN ROUND & SQUARE
CO CO	CLEAN OUT 6", 4" & BOX
22	STORM STRUCTURE TABLE REFERENCE NUMBER
22	SEWER STRUCTURE TABLE REFERENCE NUMBER

XX CONST. 4' Ø MAS RIM EL. = 10.00 N INV. EL. = 4.00 - XX" DIP E INV. EL. = 4.00 - XX" DIP S INV. EL. = 4.00 - XX" DIP W INV. EL. = 4.00 - XX" DIP	SEWER STRUCTURE CALLOUT (SHOWN AS A CIRCLE CIRCUMSCRIBING THE STRUCTURE NUMBER.)	INDICATES STRUCTURE NUMBER, STATION & OFFSET, STRUCTURE SIZE & TYPE, RIM/GRATE ELEVATION, PIPE INVERT ELEVATIONS & DIRECTION, PIPE SIZE & MATERIAL AS WELL AS ANY SPECIAL NOTES.
XX CONST. 4' Ø CB RIM EL. = 10.50 (N) INV. EL. = 4.50 - XX" HDPE (E) INV. EL. = 4.50 - XX" HDPE (S) INV. EL. = 4.50 - XX" HDPE (W) INV. EL. = 4.50 - XX" HDPE	STORM STRUCTURE CALLOUT (SHOWN AS A HEXAGON CIRCUMSCRIBING THE STRUCTURE NUMBER.)	

LINE TYPES

PROPOSED UTILITIES

W	WATER LINE
SAN	SANITARY SEWER
FM	FORCE MAIN
LFM	LOW PRESSURE FM
SD	STORM DRAIN
PSD	PRESSURE STORM
IRR	IRRIGATION
RAW	RAW WATER
RCW	RECLAIMED WATER
G	GAS LINE

PAVEMENT MARKING

	STRIPE SKIP 2-4
	STRIPE SKIP 3-9
	STRIPE SKIP 6-10
	STRIPE SKIP 10-30
	STRIPE SKIP 10-10-20
	STRIPE SKIP 2-2-2

TOPO

	BREAKLINE
	MAJOR CONTOUR
	MINOR CONTOUR
	TOP OF BANK
	TOE OF SLOPE
	EDGE OF WATER
CLS	CENTERLINE OF SWALE

GENERAL SITE

	DEMOLITION
	TURBIDITY BARRIER
	PARKING STRIPING (SINGLE)
	FIRE TRUCK PATH
	SIGHT TRIANGLE
	BUILDING FOOTPRINT
	VEHICLE OVERHANG
O	CONSTRUCTION LIMITS
SF SF	SILT FENCE
SSF SSF	SUPER SILT FENCE
X X	CHAIN LINK FENCE
H H	HANDRAIL
	PARKING STRIPING (DOUBLE)

PROPOSED ENCUMBRANCES

	PROPERTY LINE
	ROW LINE
	BUILDING SETBACK LINE
	BUFFER LINE
	EASEMENT LINE

DESCRIPTION	ABBREVIATION
AADT	ANNUAL AVERAGE DAILY TRAFFIC
ABAN	ABANDON
ADJ	ADJUST
APPROX.	APPROXIMATE
A.C.	ASPHALT CONCRETE
ACCM PIPE	ASPHALT COATED CORRUGATED METAL
BIT.	BITUMINOUS
BC	BACK OF CURB
BD.	BOUND
BL	BASELINE
BLDG	BUILDING
BM	BENCHMARK
BO	BY OTHERS
BOS	BOTTOM OF SLOPE
BR.	BRIDGE
CAP	CORRUGATED ALUMINUM PIPE
CB	CATCH BASIN
CBCI	CATCH BASIN WITH CURB INLET
CC	CEMENT CONCRETE
CCM	CEMENT CONCRETE MASONRY
CEM	CEMENT
CI	CURB INLET
CIP	CAST IRON PIPE
CLF	CHAIN LINK FENCE
CL	CENTERLINE
CMP	CORRUGATED METAL PIPE
CO.	COUNTY
CONC	CONCRETE
CONT	CONTINUOUS
CONST	CONSTRUCTION
CR GR	CROWN GRADE
DDCV	DOUBLE DETECTOR CHECK VALVE
DDCVA	DOUBLE DETECTOR CHECK VALVE ASSEMBLY
DHV	DESIGN HOURLY VOLUME
DI	DROP INLET
DIA	DIAMETER
DIP	DUCTILE IRON PIPE
DWY	DRIVEWAY
ELEV (OR EL.)	ELEVATION
EMB	EMBANKMENT
EOP	EDGE OF PAVEMENT
EOW	EDGE OF WATER
EXIST (OR EX)	EXISTING
EXC	EXCAVATION
F&C	FRAME AND COVER
F&G	FRAME AND GRATE
FDC	FIRE DEPARTMENT CONNECTION
FDN.	FOUNDATION
FH	FIRE HYDRANT
FLDSTN	FIELDSTONE
GAR	GARAGE
GD	GROUND
GI	GUTTER INLET
GIP	GALVANIZED IRON PIPE
GRAN	GRANITE
GRAV	GRAVEL
GRD	GUARD
GV	GATE VALVE
HDPE	HIGH DENSITY POLYETHYLENE
HDW	HEADWALL
HMA	HOT MIX ASPHALT
HOR	HORIZONTAL
HYD	HYDRANT
INV	INVERT
JCT	JUNCTION
L	LENGTH OF CURVE
LB	LEACH BASIN
LP	LIGHT POLE
LT	LEFT
MAX	MAXIMUM
MB	MAILBOX
MEG	MATCH EXISTING GRADE
MH	MANHOLE
MIN	MINIMUM
NIC	NOT IN CONTRACT

DESCRIPTION	ABBREVIATION
NO.	NO. NUMBER
O/S or OFF	O/S or OFF OFFSET
PB	PB PLAT BOOK
PC	PC POINT OF CURVATURE
PCC	POINT OF COMPOUND CURVATURE
P.G.L.	PROFILE GRADE LINE
PI	POINT OF INTERSECTION
PIV	POST INDICATOR VALVE
POC	POINT ON CURVE
POT	POINT ON TANGENT
PRC	POINT OF REVERSE CURVATURE
PROJ	PROJECT
PROP	PROPOSED
PT	POINT OF TANGENCY
PVC	POINT OF VERTICAL CURVATURE
PVI	POINT OF VERTICAL INTERSECTION
PVT	POINT OF VERTICAL TANGENCY
PVMT	PAVEMENT
PWW	PAVED WATER WAY
R	RADIUS OF CURVATURE
R&D	REMOVE AND DISPOSE
RCP	REINFORCED CONCRETE PIPE
RD	ROAD
RDWY	ROADWAY
REM	REMOVE
RET	RETAIN
RET WALL	RETAINING WALL
ROW	RIGHT OF WAY
RR	RAILROAD
R&R	REMOVE AND RESET
RSGV	RESILIENT SEAT GATE VALVE
RT	RIGHT
R/W	RIGHT OF WAY
SHLD	SHOULDER
SMH	SEWER MANHOLE
ST	STREET
STA	STATION
SSD	STOPPING SIGHT DISTANCE
SW	SIDEWALK
T	TANGENT DISTANCE OF CURVE/TRUCK %
TAN	TANGENT
TEMP	TEMPORARY
TC	TOP OF CURB
TOB	TOP OF BANK
TOS	TOP OF SLOPE
TSV	TAPPING SLEEVE AND VALVE
TYP	TYPICAL
UP	UTILITY POLE
VAR	VARIES
VERT	VERTICAL
VC	VERTICAL CURVE
WCR	WHEEL CHAIR RAMP
WIP	WROUGHT IRON PIPE
WM	WATER METER/WATER MAIN
X-SECT	CROSS SECTION

LINE WEIGHTS

EXISTING	SHADED LINES & TEXT DENOTE EXISTING EQUIPMENT AND STRUCTURES.
FUTURE	NON-SHADED DASHED LINES & TEXT DENOTE FUTURE EQUIPMENT, STRUCTURES AND WORK.
PROPOSED / CONSTRUCT	NON-SHADED, BOLD, SOLID LINES & TEXT DENOTE PROPOSED EQUIPMENT, STRUCTURES AND WORK.

NOTE: THIS IS A STANDARD LEGEND SHEET. NOT ALL ITEMS ARE PERTINENT TO THIS SET OF DRAWINGS

PROJECT LEAD & CIVIL ENGINEERING:

KEITH
301 EAST ATLANTIC BLVD.
POMPANO BEACH, FL 33060
PH: (954) 788-3400
Florida Engineering Business License: CA7928
Florida Surveyor and Mapper Business License: LB6860
Florida Landscape Architecture Business License: LC26000457

LANDSCAPE ARCHITECT:

MKSK
801 INTERNATIONAL PARKWAY
LAKE MARY, FL 32746
407.871.9607
MKSKSTUDIOS.COM

ARCHITECT:

WANNEMACHER JENSEN ARCHITECTS
815 NORTHWEST 57 AVE. SUITE 219
MIAMI, FLORIDA 33126
727-822-5566
WJARC.COM AA0002277

MECHANICAL, PLUMBING, & ELECTRICAL ENGINEERING:

SGM ENGINEERING
5301 WATERFORD DISTRICT DR.
SUITE 750
954-421-1944
SGMENGINEERING.COM CA-00006208

REVISIONS

NO.	DESCRIPTION	DATE
	ISSUED FOR BUILDING PERMIT	11/21/2024
	REVISED FOR BUILDING PERMIT	01/10/2025

ISSUE DATE:	03/02/2025
DESIGNED BY:	BB, NW
DRAWN BY:	CD, BB
CHECKED BY:	TD

This item has been digitally signed and sealed by **Thomas F. Donahue**, P.E. on the date adjacent to the seal. Signature must be verified on any electronic copies.

THOMAS F. DONAHUE LICENSE No. 60529 STATE OF FLORIDA PROFESSIONAL ENGINEER

2026.03.04 08:26:29-05'00'

THOMAS F. DONAHUE, P.E.
FLORIDA REG. NO. 60529
(FOR THE FIRM)

CLIENT

VILLAGE OF PINECREST
PINECREST PARKS & RECREATION

PROJECT

GARY MATZNER PARK

SHEET TITLE

LEGEND AND ABBREVIATIONS

SHEET NUMBER **GI-001**

KEITH PROJECT NUMBER **13861.00**

STATUS: CONSTRUCTION DOCUMENTS

Plotted by: haiba On 3/3/2026 3:39 PM

Drawing-name: K:\13861.00 - Gary Matzner Park Design - Village of Pinecrest\Engineering\Cadd\13861.00-GI-000.dwg

GENERAL NOTES

THIS CONSTRUCTION PROJECT MAY OR MAY NOT INCLUDE ALL ITEMS COVERED BY THESE NOTES AND SPECIFICATIONS, I.E. PAVING, GRADING, DRAINAGE LINES, WATER LINES, OR SANITARY SEWER LINES. SEE PLANS FOR DETAILED PROJECT SCOPE. NOTES AND SPECIFICATIONS ON THIS SHEET REFER TO PAVING, GRADING, DRAINAGE, WATER, AND SANITARY SEWER, AND ARE INTENDED FOR THIS PROJECTS SCOPE OF WORK AND FOR REFERENCE PURPOSES FOR OTHER WORK ITEMS THAT MAY BE REQUIRED DUE TO UNFORESEEN EXISTING CONDITIONS OR REQUIRED REMEDIAL WORK.

1. SPECIFIC SITE NOTES

1.1. COUNTY AND "CITY" IN THESE NOTES REFERS TO COUNTY AND CITY IN WHICH PROJECT RESIDES.

1.2. STATE IN THESE NOTES REFERS TO THE STATE OF FLORIDA.

1.3. EXISTING TOPOGRAPHIC INFORMATION IN THE PLANS IS BASED ON SURVEY DATA AND BEST AVAILABLE INFORMATION. SEE PROJECT SURVEY AND NOTES ON PLAN SHEETS REGARDING THE SOURCE OF THE TOPOGRAPHIC INFORMATION.

2. APPLICABLE CODES

2.1. ALL CONSTRUCTION AND MATERIALS SHALL CONFORM TO THE STANDARDS AND SPECIFICATIONS OF THE CITY, COUNTY, AND ALL OTHER JURISDICTIONAL, STATE AND NATIONAL CODES WHERE APPLICABLE.

2.2. IN THE EVENT OF A CONFLICT BETWEEN THE GENERAL NOTES AND CONSTRUCTION SPECIFICATIONS IN THESE PLANS, AND THE CONTRACT DOCUMENTS AND SPECIFICATIONS IN THE SPECIFICATION BOOKLET, THE CONTRACTOR SHALL SUBMIT WRITTEN REQUEST FOR CLARIFICATION.

2.3. ALL CONSTRUCTION SHALL BE DONE IN A SAFE MANNER AND IN STRICT COMPLIANCE WITH ALL THE REQUIREMENTS OF THE FEDERAL OCCUPATIONAL SAFETY AND HEALTH ACT OF 1970, AND ALL STATE AND JURISDICTIONAL SAFETY AND HEALTH REGULATIONS.

2.4. THE CONTRACTOR SHALL BE REQUIRED TO COMPLY WITH FEDERAL, STATE, COUNTY, AND CITY LAWS, CODES, AND REGULATIONS.

2.5. ALL HANDICAP ACCESSIBLE AREAS TO CONFORM TO THE REQUIREMENTS OF THE AMERICANS WITH DISABILITIES ACT (ADA), STATE ADA CODES, AND FLORIDA BUILDING CODE ADA CODES LATEST EDITION.

2.6. TRENCH SAFETY ACT

2.6.1. ALL TRENCH EXCAVATION SHALL BE PERFORMED IN ACCORDANCE WITH CHAPTER 90-96 OF THE LAWS OF FLORIDA (THE TRENCH SAFETY ACT).

2.6.2. ALL TRENCH EXCAVATION IN EXCESS OF 5 FEET IN DEPTH SHALL BE UNDERTAKEN IN ACCORDANCE WITH O.S.H.A. STANDARD 29 CFR. SECTION 1926.650 SUBPART P.

2.6.3. THE CONTRACTOR SHALL SUBMIT WITH HIS CONTRACT A COMPLETED, SIGNED, AND NOTARIZED COPY OF THE TRENCH SAFETY ACT COMPLIANCE STATEMENT. THE CONTRACTOR SHALL ALSO SUBMIT A SEPARATE COST ITEM IDENTIFYING THE COST OF COMPLIANCE WITH THE APPLICABLE TRENCH SAFETY CODES.

2.6.4. A TRENCH SAFETY SYSTEM, IF REQUIRED, SHALL BE DESIGNED BY THE EXCAVATION CONTRACTOR UTILIZING A SPECIALTY ENGINEER AS REQUIRED.

3. CONSTRUCTION NOTES:

3.1. CONTRACTOR SHALL TIE TO EXISTING GRADE BY EVENLY SLOPING FROM CLOSEST PROPOSED GRADE PROVIDED TO EXISTING GRADE AT LIMITS OF CONSTRUCTION, UNLESS OTHERWISE NOTED ON THE PLANS. IF NO LIMIT OF WORK LINE IS INDICATED, SLOPE TO ADJACENT PROPERTY LINE OR RIGHT-OF-WAY LINE, AS APPLICABLE.

3.2. UNLESS OTHERWISE INDICATED ON THE PLANS, ALL EXISTING MANHOLES, CATCH BASINS, METERS AND OTHER STRUCTURES, WHETHER INDICATED ON THE PLANS OR NOT SHALL BE ADJUSTED TO MATCH THE NEW GRADE, BY THE CONTRACTOR.

3.3. THE CURB SHALL BE SLOPED TO ACCOMMODATE THE NEW PAVEMENT, CATCH BASIN AND GRATE, AND THE SURFACE FLOW PATTERN.

3.4. THE CONTRACTOR SHALL USE CARE WHEN CUTTING THE EXISTING ASPHALT PAVEMENT AND DURING EXCAVATIONS, SO THAT THE EXISTING CATCH BASINS AND GRATES THAT ARE TO REMAIN WILL NOT BE DAMAGED.

3.5. THE CONTRACTOR SHALL MAINTAIN THE ROADWAY SLOPE WHEN RESURFACING THE ROADWAY. THE EDGE OF PAVEMENT SHALL MATCH THE NEW GUTTER LIP PER FDOT INDEX 520-001.

3.6. THE NEW SIDEWALK SHALL BE CONSTRUCTED IN ACCORDANCE WITH THE GIVEN ELEVATIONS AND AT THE PROPER SLOPES DEPICTED IN THE SPECIFICATIONS, DETAILS AND STANDARDS. EXISTING DRIVEWAYS AND OTHER FEATURES SHALL BE MATCHED WHEN POSSIBLE AS DIRECTED BY THE ENGINEER.

3.7. RADII SHOWN ARE TO THE EDGE OF PAVEMENT.

3.8. ALL BENCH MARK MONUMENTS WITHIN THE LIMITS OF CONSTRUCTION SHALL BE PROTECTED AND REFERENCED BY THE CONTRACTOR IN THE SAME WAY AS PUBLIC LAND CORNERS.

3.9. ALL EXCESS MATERIAL IS TO BE DISPOSED BY THE CONTRACTOR WITHIN 72 HOURS.

3.10. IN AREAS WHERE THE BASE IS EXPOSED BY THE MILLING OPERATION, THE CONTRACTOR SHALL RESTORE THE BASE TO ITS ORIGINAL THICKNESS AND STRUCTURAL CAPACITY BEFORE PAVING OVER SUCH AREAS. THIS INCLUDES BUT IS NOT LIMITED TO RESTORING ORIGINAL DEGREE OF COMPACTION, MOISTURE CONTENT, COMPOSITION, STABILITY, AND INTENDED SLOPE. IF PAVING WILL NOT TAKE PLACE THE SAME DAY THE BASE IS EXPOSED AND REWORKED, THE BASE SHALL BE SEALED ACCORDING TO THE GOVERNING STANDARDS AND SPECIFICATIONS. ANY ADDITIONAL WORK RESULTING FROM THE CONTRACTOR'S FAILURE TO PROTECT THE EXPOSED BASE AS STATED ABOVE IN ORDER TO RESTORE THE ORIGINAL STRUCTURAL CAPACITY SHALL BE THE CONTRACTOR'S COST.

3.11. THE CONTRACTOR IS TO MAINTAIN EXISTING SIGNAGE DURING CONSTRUCTION OPERATIONS, IN ORDER TO FACILITATE EMERGENCY VEHICLE TRAFFIC.

3.12. THE TOPOGRAPHIC SURVEY INCLUDED WITH THIS SET OF PLANS REFLECTS PRE-DEMOLITION CONDITIONS AND DOES NOT REFLECT THE SITE CONDITIONS AFTER DEMOLITION. THE CONTRACTOR IS FULLY AND SOLELY RESPONSIBLE IN DETERMINING THE REQUIRED EARTHWORK FOR THE PROPOSED DEVELOPMENT OF THE SITE. THIS INCLUDES, BUT IS NOT LIMITED TO, ANY EXCAVATION/DREDGE AND FILL ACTIVITIES REQUIRED AT ANY PHASE OF THE PROJECT. THE CONTRACTOR SHALL USE THE FINAL APPROVED (RELEASED FOR CONSTRUCTION) PLANS, SURVEYS, GEOTECHNICAL REPORTS, AND ANY OTHER AVAILABLE INFORMATION FOR DETERMINING THE AMOUNT OF EXCAVATION/DREDGING AND FILLING REQUIRED. ANY QUANTITIES INCLUDED IN THE APPROVED PERMITS WERE ESTIMATED BY THE ENGINEER FOR PURPOSES OF OBTAINING THE PERMIT AND UNDER NO CIRCUMSTANCES SHALL BE USED BY THE CONTRACTOR IN LIEU OF PERFORMING THEIR OWN EARTHWORK CALCULATIONS REQUIRED FOR COST ESTIMATING AND BIDDING THE PROJECT.

3.13. THE CONTRACTOR SHALL BE RESPONSIBLE FOR READING AND FAMILIARIZING THEMSELVES WITH ANY AND ALL AVAILABLE GEOTECHNICAL REPORTS PREPARED BY OTHERS AND/OR ANY RECOMMENDATIONS WRITTEN OR IMPLIED BY THE GEOTECHNICAL ENGINEER FOR THIS PROJECT. THE GEOTECHNICAL CONDITIONS AND RECOMMENDATIONS OUTLINED IN THESE REPORTS ARE IN FORCE AND IN FULL EFFECT AS PART OF THE PROPOSED IMPROVEMENTS. THE CONTRACTOR IS RESPONSIBLE FOR ENSURING THAT ALL THE WORK ASSOCIATED WITH THIS PROJECT IS IN COMPLIANCE WITH THE GEOTECHNICAL ENGINEER'S RECOMMENDATIONS. KEITH AND ASSOCIATES, INC. IS NOT RESPONSIBLE FOR THE SUITABILITY OR UNSUITABILITY OF THE SOILS ENCOUNTERED. IT IS THE CONTRACTOR'S RESPONSIBILITY TO ENSURE THAT THE MEANS AND METHODS OF CONSTRUCTION USED CAN AND WILL ALLOW FOR THE SUCCESSFUL COMPLETION OF THE REQUIRED SITE IMPROVEMENTS.

3.14. THE CONTRACTOR SHALL ENSURE THAT THE AVAILABLE GEOTECHNICAL INFORMATION IS SUFFICIENT FOR HIS COMPLETE UNDERSTANDING OF THE SOIL CONDITIONS FOR THE SITE. IF ADDITIONAL GEOTECHNICAL INVESTIGATION IS REQUIRED BY THE CONTRACTOR, THIS ADDITIONAL WORK SHALL BE CONSIDERED INCIDENTAL TO THE CONTRACT AND NO ADDITIONAL COMPENSATION SHALL BE ALLOWED.

3.15. THE CONTRACTOR SHALL BE RESPONSIBLE FOR THE REPAIR AND RESTORATION OF EXISTING PAVEMENT, PIPES, CONDUITS, SPRINKLER HEADS, CABLES, ETC., AND LANDSCAPED AREAS DAMAGED AS A RESULT OF THE CONTRACTOR'S OPERATIONS AND/OR THOSE OF HIS SUBCONTRACTORS AND SHALL RESTORE AT NO ADDITIONAL COST.

3.16. THE CONTRACTOR SHALL NOT BRING ANY HAZARDOUS MATERIALS ONTO THE PROJECT. SHOULD THE CONTRACTOR REQUIRE SUCH FOR PERFORMING THE CONTRACTED WORK, THE CONTRACTOR SHALL REQUEST, IN WRITING, PERMISSION FROM THE OWNER, CITY AND ENGINEER. THE CONTRACTOR SHALL PROVIDE THE OWNER, CITY AND ENGINEER WITH A COPY OF THE MATERIAL SAFETY DATA SHEET (MSDS) FOR EACH HAZARDOUS MATERIAL PROPOSED FOR USE. THE PROJECT ENGINEER SHALL COORDINATE WITH THE OWNER AND CITY PRIOR TO ISSUING WRITTEN APPROVAL TO THE CONTRACTOR.

3.17. ANY KNOWN OR SUSPECTED HAZARDOUS MATERIAL FOUND ON THE PROJECT BY THE CONTRACTOR SHALL BE IMMEDIATELY REPORTED TO THE CITY AND/OR ENGINEER, WHO SHALL DIRECT THE CONTRACTOR TO PROTECT THE AREA OF KNOWN OR SUSPECTED CONTAMINATION FROM FURTHER ACCESS. THE CITY AND/OR ENGINEER ARE TO NOTIFY THE OWNER/ENGINEER OF THE DISCOVERY. THE OWNER/ENGINEER WILL ARRANGE FOR INVESTIGATION, IDENTIFICATION, AND REMEDIATION OF THE HAZARDOUS MATERIAL. THE CONTRACTOR SHALL NOT RETURN TO THE AREA OF CONTAMINATION UNTIL APPROVAL IS PROVIDED BY THE ENGINEER.

3.18. THE CONTRACTOR SHALL CONTACT THE APPROPRIATE CITY, COUNTY, OR STATE ENGINEERING INSPECTOR AND ENGINEER 48 HOURS IN ADVANCE OF THE EVENT TO NOTIFY THE CITY OF CONSTRUCTION START UP, OR TO SCHEDULE ALL REQUIRED TESTS AND INSPECTIONS INCLUDING FINAL WALK-THROUGHS.

4. PRECONSTRUCTION RESPONSIBILITIES

4.1. ALL UTILITY / ACCESS EASEMENTS TO BE SECURED PRIOR TO CONSTRUCTION.

4.2. NO CONSTRUCTION MAY COMMENCE UNTIL THE APPROPRIATE PERMITS HAVE BEEN OBTAINED FROM ALL MUNICIPAL, STATE, COUNTY, AND FEDERAL AGENCIES AND A PRE-CONSTRUCTION MEETING HAS BEEN CONDUCTED.

4.3. ALL REQUIRED GOVERNMENTAL AGENCY BUILDING PERMITS TO BE OBTAINED BY THE CONTRACTOR PRIOR TO ANY CONSTRUCTION ACTIVITY.

4.4. CONTRACTOR TO COORDINATE CONSTRUCTION SCHEDULING FOR CONNECTION TO THE EXISTING WATER AND SEWER LINES WITH THE UTILITY DEPARTMENT THAT OWNS AND/OR MAINTAINS THE WATER AND SEWER LINES.

4.5. PRIOR TO THE START OF CONSTRUCTION, THE OWNER SHALL SUBMIT AN NPDES CONSTRUCTION GENERAL PERMIT (CGP) "NOTICE OF INTENT (N.O.I.) TO USE GENERIC PERMIT FOR STORM WATER DISCHARGE FROM CONSTRUCTION ACTIVITIES FORM (DEP FORM 62-621.300(4)(B)) TO FDEP NOTICES CENTER. THE CONTRACTOR WILL BE RESPONSIBLE FOR (1) IMPLEMENTATION OF THE STORM WATER POLLUTION PREVENTION PLAN (SWPPP) THAT WAS REQUIRED TO BE DEVELOPED PRIOR TO NOI SUBMITTAL, AND (2) RETENTION OF RECORDS REQUIRED BY THE PERMIT, INCLUDING RETENTION OF A COPY OF THE SWPPP AT THE CONSTRUCTION SITE FROM THE DATE OF PROJECT INITIATION TO THE DATE OF FINAL SITE STABILIZATION. A "NOTICE OF TERMINATION (N.O.T.) OF GENERIC PERMIT COVERAGE" FORM (DEP FORM 62-621.300(6)) MUST BE SUBMITTED TO FDEP TO DISCONTINUE PERMIT COVERAGE, SUBSEQUENT TO COMPLETION OF CONSTRUCTION. FOR ADDITIONAL INFORMATION SEE FDEP WEBSITE: HTTP://FLORIDADEP.GOV/WATER/STORMWATER.

4.6. PRIOR TO CONSTRUCTION OR INSTALLATION, SHOP DRAWINGS SHALL BE SUBMITTED FOR REVIEW AS REQUIRED FOR THE FOLLOWING ITEMS LISTED BELOW, BUT NOT LIMITED TO:

- DRAINAGE: CATCH BASINS, MANHOLES, HEADWALLS, GRATES/TOPS, YARD DRAINS.
- WATER: FIRE HYDRANTS, VALVES, BACKFLOW PREVENTER, DDCV, METER BOX.
- SEWER: MANHOLES, LIFT STATIONS (WETWELL, HATCHES, VALVES, PUMP DATA, ELECTRICAL PANEL)

4.6.1 CATALOGUE LITERATURE SHALL BE SUBMITTED FOR DRAINAGE, WATER AND SEWER PIPES, FITTINGS, AND APPURTENANCES.

4.6.2 PRIOR TO SUBMITTING SHOP DRAWINGS TO THE ENGINEER, THE CONTRACTOR SHALL REVIEW AND APPROVE THE DRAWINGS, AND SHALL NOTE IN RED ANY DEVIATIONS FROM THE ENGINEER'S PLANS OR SPECIFICATIONS.

4.6.3 INDIVIDUAL SHOP DRAWINGS FOR ALL PRECAST STRUCTURES ARE REQUIRED. CATALOGUE LITERATURE WILL NOT BE ACCEPTED FOR PRECAST STRUCTURES.

4.7 CONTRACTOR TO SUBMIT MAINTENANCE OF TRAFFIC PLAN(S) IN ACCORDANCE WITH APPROPRIATE CITY, COUNTY, OR STATE REQUIREMENTS, AND SUBMIT FOR APPROVAL PRIOR TO BEGINNING CONSTRUCTION.

5. INSPECTIONS / TESTING:

5.1. THE CONTRACTOR SHALL NOTIFY IN WRITING THE OWNER, CITY, COUNTY, ENGINEER OF RECORD, AND ANY OTHER GOVERNMENTAL AGENCIES HAVING JURISDICTION AT LEAST 48 HOURS PRIOR TO BEGINNING CONSTRUCTION AND PRIOR TO REQUIRED INSPECTIONS OF THE FOLLOWING ITEMS, WHERE APPLICABLE:

- CLEARING AND EARTHWORK
- STORM DRAINAGE SYSTEMS
- SANITARY SEWER SYSTEMS
- WATER DISTRIBUTION SYSTEMS
- SUBGRADE
- LIMEROCK BASE
- ASPHALT OR CONCRETE PAVEMENT
- SIDEWALKS, CONCRETE FLATWORK/CURBING
- LANDSCAPING
- PAVEMENT MARKING AND SIGNAGE
- SIGNALIZATION
- SITE LIGHTING
- ELECTRICAL AND COMMUNICATION LINES
- UTILITY CONDUITS
- IRRIGATION
- FINAL

5.2 THE OWNER, ENGINEER, AND JURISDICTIONAL PERMITTING AGENCIES MAY MAKE INSPECTIONS OF THE WORK AT ANY TIME. THE CONTRACTOR SHALL COOPERATE FULLY WITH ALL INSPECTIONS.

5.3 TESTING - ALL TESTING REQUIRED BY THE PLANS AND SPECIFICATIONS SHALL BE PERFORMED BY A LICENSED / FDOT QUALIFIED TESTING COMPANY. REQUIRED TEST FOR ASPHALT AND LIMEROCK SHALL BE TAKEN AT THE DIRECTION OF THE ENGINEER OR THE JURISDICTIONAL GOVERNMENTAL AGENCY IN ACCORDANCE WITH THE PLANS AND SPECIFICATIONS.

6. TEMPORARY FACILITIES

6.1. IT SHALL BE THE CONTRACTOR'S RESPONSIBILITY TO ARRANGE FOR OR SUPPLY TEMPORARY WATER SERVICE, SANITARY FACILITIES, COMMUNICATIONS, AND ELECTRICITY, FOR HIS OPERATIONS AND WORKS, COST INCLUDED UNDER MOBILIZATION.

6.2. CONTRACTOR SHALL CONSTRUCT TEMPORARY FENCING TO SECURE CONSTRUCTION AREAS AT ALL TIMES, COST INCLUDED IN MOBILIZATION.

6.3. CONTRACTOR TO OBTAIN A SECURE STAGING AREA AND OBTAIN ALL NECESSARY APPROVALS FROM THE OWNER.

6.4. CONTRACTOR SHALL CONSTRUCT AND MAINTAIN TEMPORARY LIGHTING AS REQUIRED TO LIGHT THE CONSTRUCTION PROJECT LIMITS AT ALL TIMES, TO AT LEAST THE SAME LIGHTING INTENSITY LEVELS AS THE EXISTING CONDITIONS.

6.5. THE CONTRACTOR SHALL MAINTAIN ACCESS TO ADJACENT PROPERTIES AT ALL TIMES.

7. PROJECT PROGRESS AND CLOSEOUT

7.1. DURING CONSTRUCTION, THE PROJECT SITE AND ALL ADJACENT AREAS SHALL BE MAINTAINED IN A NEAT AND CLEAN MANNER, AND UPON FINAL CLEAN-UP, THE PROJECT SITE SHALL BE LEFT CLEAR OF ALL SURPLUS MATERIAL OR TRASH. THE PAVED AREAS SHALL BE BROOM SWEPT CLEAN.

7.2. THE CONTRACTOR SHALL RESTORE OR REPLACE ANY PUBLIC OR PRIVATE PROPERTY (SUCH AS HIGHWAY, DRIVEWAY, WALKWAY, AND LANDSCAPING), DAMAGED BY HIS WORK, EQUIPMENT, OR EMPLOYEES, TO A CONDITION AT LEAST EQUAL TO THAT EXISTING IMMEDIATELY PRIOR TO THE BEGINNING OF CONSTRUCTION. SUITABLE MATERIALS AND METHODS SHALL BE USED FOR SUCH RESTORATION.

7.3. MATERIAL OR DEBRIS SHALL BE HAULED IN ACCORDANCE WITH NPDES PERMIT AND JURISDICTIONAL LAWS.

7.4. ALL LAND SURVEY PROPERTY MONUMENTS OR PERMANENT REFERENCE MARKERS, REMOVED OR DESTROYED BY THE CONTRACTOR DURING CONSTRUCTION SHALL BE RESTORED BY A STATE OF FLORIDA REGISTERED LAND SURVEYOR AT THE CONTRACTOR'S EXPENSE.

7.5. ALL UNPAVED SURFACES DISTURBED AS A RESULT OF CONSTRUCTION ACTIVITIES SHALL BE GRADED, SODDED, & RESTORED TO A CONDITION EQUAL TO OR BETTER THAN THAT WHICH EXISTED BEFORE THE CONSTRUCTION.

8. PROJECT RECORD DOCUMENTS:

8.1. DURING THE DAILY PROGRESS OF THE JOB, THE CONTRACTOR SHALL RECORD ON HIS SET OF CONSTRUCTION DRAWINGS THE LOCATION, LENGTH, MATERIAL AND ELEVATION OF ANY FACILITY NOT BUILT ACCORDING TO PLANS. THIS COPY OF THE "AS-BUILT" SHALL BE SUBMITTED TO ENGINEER FOR PROJECT RECORD.

8.2. UPON COMPLETION OF DRAINAGE IMPROVEMENTS AND LIMEROCK BASE CONSTRUCTION (AT LEAST 48 HOURS BEFORE PLACING ASPHALT PAVEMENT) THE CONTRACTOR SHALL FURNISH THE ENGINEER OF RECORD "AS-BUILT" PLANS FOR THESE IMPROVEMENTS, SHOWING THE LOCATIONS AND PERTINENT GRADES OF ALL DRAINAGE INSTALLATIONS AND THE FINISHED ROCK GRADES OF THE ROAD CROWN AND EDGES OF PAVEMENT AT 50 FOOT INTERVALS, INCLUDING LOCATIONS AND ELEVATIONS OF ALL HIGH AND LOW POINTS.

8.3. UPON COMPLETION OF CONSTRUCTION, AND PRIOR TO FINAL ACCEPTANCE, THE CONTRACTOR SHALL SUBMIT TO THE ENGINEER OF RECORD ONE COMPLETE SET OF ALL "AS-BUILT" CONTRACT DRAWINGS. THESE DRAWINGS SHALL BE MARKED TO SHOW "AS-BUILT" CONSTRUCTION CHANGES, DIMENSIONS, LOCATIONS, AND ELEVATIONS OF ALL IMPROVEMENTS.

8.4. "AS-BUILT" DRAWINGS OF WATER LINES AND FORCE MAINS SHALL INCLUDE THE FOLLOWING INFORMATION:

8.4.1. TOP OF PIPE ELEVATIONS EVERY 100 LF.

8.4.2. LOCATIONS AND ELEVATIONS OF ALL FITTINGS INCLUDING BENDS, TEES, GATE VALVES, DOUBLE DETECTOR CHECK VALVES, FIRE HYDRANTS, AND APPURTENANCES.

8.4.3. ALL CONNECTIONS TO EXISTING LINES.

8.4.4. ENDS OF ALL WATER SERVICES AT THE BUILDINGS WHERE THE WATER SERVICE TERMINATES.

8.5. "AS-BUILT" DRAWINGS OF GRAVITY SANITARY SEWER LINES SHALL INCLUDE THE FOLLOWING INFORMATION:

8.5.1. RIM ELEVATIONS, INVERT ELEVATIONS, LENGTH OF PIPING BETWEEN STRUCTURES, AND SLOPES.

8.5.2. THE STUB ENDS AND CLEANOUTS OF ALL SEWER LATERALS SHALL BE LOCATED HORIZONTALLY AND VERTICALLY.

8.6. "AS-BUILT" DRAWINGS OF ALL DRAINAGE LINES SHALL INCLUDE THE FOLLOWING INFORMATION:

8.6.1. RIM ELEVATION, INVERT ELEVATION, LENGTH OF PIPING BETWEEN STRUCTURES, AND CONTROL STRUCTURE ELEVATIONS IF APPLICABLE.

8.6.2. THE SIZE OF THE LINES.

8.6.3. DRAINAGE WELL STRUCTURE SHALL INCLUDE, BUT NOT BE LIMITED TO, TOP OF CASING ELEVATION, TOP AND BOTTOM ELEVATIONS OF THE STRUCTURE AND BAFFLE WALLS, RIM ELEVATIONS AND PIPE INVERTS.

8.7. "AS-BUILT" DRAWINGS OF CONSTRUCTION AREAS SHALL INCLUDE THE FOLLOWING:

8.7.1. ROCK ELEVATIONS AT ALL HIGH, AND LOW POINTS, AND AT ENOUGH INTERMEDIATE POINTS TO CONFIRM SLOPE CONSISTENCY.

8.7.2. ROCK ELEVATIONS AND CONCRETE BASE ELEVATIONS SHALL BE TAKEN AT ALL LOCATIONS WHERE THERE IS A FINISH GRADE ELEVATION SHOWN ON THE DESIGN PLANS.

8.7.3. ALL CATCH BASIN AND MANHOLE RIM ELEVATIONS.

8.7.4. FINISH GRADE ELEVATIONS IN ISLAND AREAS.

8.7.5. "AS-BUILT" ELEVATIONS SHALL BE TAKEN ON ALL PAVED AND UNPAVED SWALES, AT ENOUGH INTERMEDIATE POINTS TO CONFIRM SLOPE CONSISTENCY AND CONFORMANCE TO THE PLAN DETAILS.

8.7.6. LAKE AND CANAL BANK "AS-BUILT" DRAWINGS SHALL INCLUDE A KEY SHEET OF THE LAKE FOR THE LOCATION OF CROSS SECTIONS. LAKE AND CANAL BANK CROSS SECTIONS SHALL BE PLOTTED AT A MINIMUM OF EVERY 100 LF, UNLESS OTHERWISE SPECIFIED. "AS-BUILT" DRAWINGS SHALL CONSIST OF THE LOCATION AND ELEVATION OF THE TOP OF BANK, EDGE OF WATER, AND THE DEEP CUT LINE, WITH THE DISTANCE BETWEEN EACH SHOWN ON THE DRAWING.

8.7.7. RETENTION AREA "AS-BUILT" ELEVATIONS SHALL BE TAKEN AT THE BOTTOM OF THE RETENTION AREA AND AT THE TOP OF BANK. IF THERE ARE CONTOURS INDICATED ON THE DESIGN PLANS, THEN THEY SHALL BE INCLUDED IN "AS-BUILT" DRAWINGS AS WELL.

8.8. UPON COMPLETION OF THE WORK, THE CONTRACTOR SHALL PREPARE "AS-BUILT" DRAWINGS ON FULL SIZE, 24" X 36" SHEETS. ALL "AS-BUILT" INFORMATION SHALL BE PUT ON THE LATEST ENGINEERING DRAWINGS. A FULL SET OF PDF "AS-BUILT" DRAWINGS SHALL BE SUBMITTED. THESE DRAWINGS SHALL BE SIGNED AND SEALED BY A FLORIDA REGISTERED PROFESSIONAL ENGINEER OR LAND SURVEYOR.

8.9. AN ELECTRONIC COPY OF THESE "AS-BUILT" DRAWINGS SHALL BE SUBMITTED TO THE ENGINEER OF RECORD IN AUTOCAD, VERSION 2008 OR LATER.

9. UTILITY NOTES

9.1. CONTRACTOR IS RESPONSIBLE FOR UTILITY VERIFICATION PRIOR TO FABRICATION.

9.2. THE CONTRACTOR IS ADVISED THAT PROPERTIES ADJACENT TO THE PROJECT HAVE ELECTRIC, TELEPHONE, GAS, WATER AND/OR SEWER SERVICE LATERALS WHICH MAY NOT BE SHOWN IN PLANS. THE CONTRACTOR MUST REQUEST THE LOCATION OF THESE LATERAL SERVICES FROM THE UTILITY COMPANIES.

9.3. THE CONTRACTOR SHALL USE HAND DIGGING WHEN EXCAVATING NEAR EXISTING UTILITIES. EXTREME CAUTION SHALL BE EXERCISED BY THE CONTRACTOR WHILE EXCAVATING, INSTALLING, BACKFILLING OR COMPACTING AROUND THE UTILITIES.

9.4. THE CONTRACTOR SHALL NOTIFY AND OBTAIN AN UNDERGROUND CLEARANCE FROM ALL UTILITY COMPANIES AND GOVERNMENTAL AGENCIES AT LEAST 48 HOURS PRIOR TO BEGINNING ANY CONSTRUCTION. THE CONTRACTOR SHALL OBTAIN A SUNSHINE811.COM CERTIFICATION CLEARANCE NUMBER AND FIELD MARKINGS AT LEAST 48 HOURS PRIOR TO BEGINNING ANY EXCAVATION.

- PRIOR TO COMMENCEMENT OF ANY EXCAVATION, THE CONTRACTOR SHALL COMPLY WITH FLORIDA STATUTE 553.851 FOR THE PROTECTION OF UNDERGROUND GAS PIPELINES.

9.5 FOR STREET EXCAVATION OR CLOSING OR FOR ALTERATION OF ACCESS TO PUBLIC OR PRIVATE PROPERTY, THE CONTRACTOR SHALL NOTIFY:

- ROADWAY JURISDICTIONAL ENGINEERING / PUBLIC WORKS AUTHORITY.
- COUNTY TRANSIT AUTHORITY
- SCHOOL BOARD TRANSPORTATION AUTHORITY
- JURISDICTIONAL FIRE DEPARTMENT DISPATCH
- JURISDICTIONAL POLICE DEPARTMENT(S)

9.6 THE CONTRACTOR SHALL USE EXTREME CAUTION WORKING UNDER, OVER, AND AROUND EXISTING ELECTRIC LINES. THE CONTRACTOR SHALL CONTACT THE ELECTRIC PROVIDER COMPANY TO VERIFY LOCATIONS, VOLTAGE, AND REQUIRED CLEARANCES, ONSITE, IN RIGHT-OF-WAYS, AND IN EASEMENTS, PRIOR TO ANY CONSTRUCTION IN THE VICINITY OF EXISTING LINES.

9.7 LOCATION AND SIZE OF ALL EXISTING UTILITIES AND TOPOGRAPHY (FACILITIES) AS SHOWN ON CONSTRUCTION DRAWINGS ARE DRAWN FROM AVAILABLE RECORDS. THE ENGINEER ASSUMES NO RESPONSIBILITY FOR THE ACCURACY OF THE FACILITIES SHOWN OR FOR ANY FACILITY NOT SHOWN. IT IS THE CONTRACTOR'S RESPONSIBILITY TO DETERMINE THE EXACT LOCATION (VERTICAL & HORIZONTAL) OF ANY EXISTING UTILITIES AND TOPOGRAPHY PRIOR TO CONSTRUCTION. THE CONTRACTOR SHALL VERIFY THE ELEVATIONS AND LOCATIONS OF ALL EXISTING FACILITIES, IN COORDINATION WITH ALL UTILITY COMPANIES, PRIOR TO BEGINNING ANY CONSTRUCTION OPERATIONS. IF AN EXISTING FACILITY IS FOUND TO CONFLICT WITH THE PROPOSED CONSTRUCTION, THE CONTRACTOR SHALL IMMEDIATELY NOTIFY THE ENGINEER SO THAT APPROPRIATE MEASURES CAN BE TAKEN TO RESOLVE THE CONFLICT.

9.8 THE CONTRACTOR SHALL COORDINATE THE WORK WITH OTHER CONTRACTORS IN THE AREA AND ANY OTHER UNDERGROUND UTILITY COMPANIES REQUIRED. THE CONTRACTOR SHALL COORDINATE RELOCATION OF ALL EXISTING UTILITIES WITH APPLICABLE UTILITY COMPANIES.

10. SIGNING AND PAVEMENT MARKINGS

10.1. ALL SIGNING AND PAVEMENT MARKINGS INSTALLED AS PART OF THESE PLANS SHALL CONFORM TO THE FEDERAL HIGHWAY ADMINISTRATION (FHWA) "MANUAL ON UNIFORM TRAFFIC CONTROL DEVICES" (MUTCD), COUNTY TRAFFIC DESIGN STANDARDS AND FDOT DESIGN STANDARDS AS A MINIMUM CRITERIA.

10.2. MATCH EXISTING PAVEMENT MARKINGS AT THE LIMITS OF CONSTRUCTION.

10.3. REMOVAL OF THE EXISTING PAVEMENT MARKINGS SHALL BE ACCOMPLISHED BY WATER BLASTING OR OTHER APPROVED METHODS DETERMINED BY THE ENGINEER.

10.4. INCORRECTLY PLACED PAINT OR THERMOPLASTIC PAVEMENT MARKINGS OVER FRICTION COURSE WILL BE REMOVED BY MILLING AND REPLACING THE FRICTION COURSE A MINIMUM WIDTH OF 18 IN AT THE CONTRACTOR'S EXPENSE. THE ENGINEER MAY APPROVE AN ALTERNATIVE METHOD IF IT CAN BE DEMONSTRATED TO COMPLETELY REMOVE THE MARKINGS WITHOUT DAMAGING THE ASPHALT.

10.5. PLACE ALL RETRO-REFLECTIVE PAVEMENT MARKERS IN ACCORDANCE WITH FDOT STANDARD INDEX 706-001 AND / OR AS SHOWN IN THE PLANS.

10.6. CAUTION SHOULD BE EXERCISED WHILE RELOCATING EXISTING SIGNS TO PREVENT UNNECESSARY DAMAGE TO SIGNS. IF THE SIGN IS DAMAGED BEYOND USE, AS DETERMINED BY THE ENGINEER, SIGNS SHALL BE REPLACED BY THE CONTRACTOR AT HIS EXPENSE.

10.7. ALL EXISTING SIGNS THAT CONFLICT WITH CONSTRUCTION OPERATIONS SHALL BE REMOVED, STOCKPILED, AND RELOCATED BY THE CONTRACTOR. SIGN REMOVAL SHALL BE DIRECTED BY THE ENGINEER.

10.8. RELOCATED SIGN SUPPORT SYSTEM MUST MEET THE CURRENT DESIGN STANDARD.

10.9. THE CONTRACTOR SHALL PROVIDE AN INVENTORY OF EXISTING SIGNS TO REMAIN OR TO BE RELOCATED PRIOR TO STARTING THE JOB AND FORWARD THIS LIST TO THE ENGINEER. CONTRACTOR SHALL NOTIFY IF THERE ARE ANY MISSING OR DAMAGE SIGNS THAT THE PLANS SHOW TO REMAIN OR TO BE RELOCATED.

10.10. ALL ROADWAY PAVEMENT MARKINGS SHALL BE THERMOPLASTIC IN ACCORDANCE WITH FDOT SPECIFICATIONS SECTION 711.

10.11. HAND DIG THE FIRST FOUR FEET OF SIGN FOUNDATION.

10.12. ALL SIGNS SHALL MEET ALL OF THE FOLLOWING:

- MEET THE CRITERIA OUTLINED IN SECTION 2A.08 OF THE 2009 MUTCD
- MEET THE SPECIFICATIONS OUTLINED IN SECTION 700 AND 994 OF THE LATEST FDOT STANDARD SPECIFICATIONS.
- CONSIST OF MATERIALS CERTIFIED TO MEET THE RETROREFLECTIVE SHEETING REQUIREMENTS OUTLINED IN THE CURRENT VERSION OF ASTM D4956 FOR TYPE-XI RETROREFLECTIVE SHEETING MATERIALS MADE WITH PRISIMS, EXCEPT FOR SCHOOL ZONE AND PEDESTRIAN SIGNS WHICH SHALL BE COMPRISED OF RETROREFLECTIVE FLUORESCENT YELLOW-GREEN SHEETING CERTIFIED TO MEET ASTM D4956 TYPE IV RETROREFLECTIVE SHEETING MATERIALS.
- CONSIST OF RETROREFLECTIVE SHEETING MATERIALS THAT HAVE A VALID FDOT APPROVED PRODUCT LIST (APL) CERTIFICATION FOR SPECIFICATION 700 HIGHWAY SIGNING FOR FDOT SHEETING TYPE XI (OR TYPE IV FOR SCHOOL AND PEDESTRIAN SIGNS).

10.13 PATCH ATTACHMENT HARDWARE, SUCH AS COUNTERSUNK SCREWS OR RIVET HEADS, WITH RETRO REFLECTIVE BUTTONS THAT MATCH THE COLOR AND SHEETING MATERIAL OF THE FINISHED SIGN PANEL INCLUDING THE BACKGROUND, LEGEND OR BORDER.

10.14 ENSURE THE OUTSIDE CORNER OF SIGN IS CONCENTRIC WITH BORDER. ENSURE WHITE BORDERS ARE MOUNTED PARALLEL TO THE EDGE OF THE SIGN. ENSURE BLACK BORDERS ARE RECESSED FROM THE EDGE OF THE SIGN.

10.15 LAYOUT PERMANENT FINAL STRIPING THAT LEAVES NO VISIBLE MARKS AT TIME OF FINAL ACCEPTANCE.

PROJECT LEAD & CIVIL ENGINEERING:

KEITH
301 EAST ATLANTIC BLVD.
POMPANO BEACH, FL 33060
PH: (954) 788-3400
Florida Engineering Business License: CA7928
Florida Surveyor and Mapper Business License: LB6860
Florida Landscape Architecture Business License: LC26000457

LANDSCAPE ARCHITECT:

MKSK
801 INTERNATIONAL PARKWAY
LAKE MARY, FL 32746
407.871.9607
MKSKSTUDIOS.COM

ARCHITECT:

WANNEMACHER JENSEN ARCHITECTS
815 NORTHWEST 57 AVE. SUITE 219
MIAMI, FLORIDA 33126
727-822-5566
WJARC.COM AA0002277

MECHANICAL, PLUMBING, & ELECTRICAL ENGINEERING:

SGM ENGINEERING
5301 WATERFORD DISTRICT DR.
SUITE 750
954-421-1944
SGMENGINEERING.COM CA-00006208

REVISIONS		
NO.	DESCRIPTION	DATE
	ISSUED FOR BUILDING PERMIT	11/21/2024
	REVISED FOR BUILDING PERMIT	01/10/2025

ISSUE DATE:	03/02/2025
DESIGNED BY:	BB, NW
DRAWN BY:	CD, BB
CHECKED BY:	TD

This item has been digitally signed and sealed by **Thomas F. Donahue**, P.E. on the date adjacent to the seal.

THOMAS F. DONAHUE LICENSE No. 60529 STATE OF FLORIDA PROFESSIONAL ENGINEER

Signature must be verified on any electronic copies.

2026.03.04 08:26:48-05'00'

THOMAS F. DONAHUE, P.E.
FLORIDA REG. NO. 60529
(FOR THE FIRM)

CLIENT

VILLAGE OF PINECREST

PINECREST PARKS & RECREATION

PROJECT

GARY MATZNER PARK

SHEET TITLE

GENERAL CONSTRUCTION NOTES

SHEET NUMBER **GI-002**

KEITH PROJECT NUMBER **13861.00**

Plotted by: halba On 3/3/2026 3:39 PM

Drawing name: K:\13861.00 - Gary Matzner Park Design - Village of Pinecrest\Engineering\Cadd\13861.00-GI-000.dwg

STATUS: CONSTRUCTION DOCUMENTS

CONSTRUCTION SPECIFICATIONS

SECTION 20 - GENERAL SPECIFICATIONS PAVING GRADING DRAINAGE AND EARTHWORK

20. GENERAL

20.1. IT IS THE INTENT OF THESE SPECIFICATIONS TO DESCRIBE THE MINIMUM ACCEPTABLE TECHNICAL REQUIREMENTS FOR THE MATERIALS AND WORKMANSHIP FOR CONSTRUCTION OF SITE IMPROVEMENTS FOR THIS PROJECT. SUCH IMPROVEMENTS MAY GENERALLY INCLUDE, BUT NOT TO BE LIMITED TO, CLEARING, GRADING, PAVING, REMOVAL OF EXISTING PAVEMENT STORM DRAINAGE, WATER LINES AND SANITARY SEWERS.

20.2. IT IS THE INTENT THAT THE FLORIDA DEPARTMENT OF TRANSPORTATION (FDOT) "STANDARD SPECIFICATIONS FOR ROAD AND BRIDGE CONSTRUCTION: (CURRENT EDITION) TOGETHER WITH "SUPPLEMENTAL SPECIFICATIONS TO THE STANDARD SPECIFICATIONS FOR ROAD AND BRIDGE CONSTRUCTION" (CURRENT EDITION), AND THE FDOT STANDARD PLANS FOR ROAD CONSTRUCTION (CURRENT EDITION) BE USED WHERE APPLICABLE FOR THE VARIOUS WORK, AND THAT WHERE SUCH WORDING THEREIN REFERS TO THE STATE OF FLORIDA AND ITS DEPARTMENT OF TRANSPORTATION AND PERSONNEL, SUCH WORDING IS INTENDED TO BE REPLACED WITH THE WORDING WHICH WOULD PROVIDE PROPER TERMINOLOGY; THEREBY MAKING SUCH "STANDARD SPECIFICATIONS FOR ROAD AND BRIDGE CONSTRUCTION" TOGETHER WITH THE "FDOT STANDARD PLANS FOR ROAD CONSTRUCTION" AS THE "STANDARD SPECIFICATIONS" FOR THIS PROJECT. IF WITHIN A PARTICULAR SECTION, ANOTHER SECTION, ARTICLE OR PARAGRAPH IS REFERRED TO, IT SHALL BE PART OF THE STANDARD SPECIFICATIONS ALSO. THE CONTRACTOR SHALL ABIDE BY ALL LOCAL AND STATE LAWS, REGULATIONS AND BUILDING CODES WHICH HAVE JURISDICTION IN THE AREA.

20.3. THE CONTRACTOR SHALL FURNISH ALL LABOR, MATERIALS AND EQUIPMENT AND PERFORM ALL OPERATIONS REQUIRED TO COMPLETE THE CONSTRUCTION OF A PAVING AND DRAINAGE SYSTEM AS SHOWN ON THE PLANS, SPECIFIED HEREIN, OR BOTH. IT IS THE INTENT TO PROVIDE A COMPLETE AND OPERATING FACILITY IN ACCORDANCE WITH THESE SPECIFICATIONS AND THE CONSTRUCTION DRAWINGS. THE MATERIAL AND EQUIPMENT SHOWN OR SPECIFIED SHALL NOT BE TAKEN TO EXCLUDE ANY OTHER INCIDENTALS NECESSARY TO COMPLETE THE WORK.

20.4. ALL LABOR, MATERIALS, AND METHODS OF CONSTRUCTION SHALL BE IN STRICT ACCORDANCE WITH THE PLANS AND CONSTRUCTION SPECIFICATIONS AND THE MINIMUM ENGINEERING AND CONSTRUCTION STANDARDS ADOPTED BY THE UNIT OF GOVERNMENT WHICH HAS JURISDICTION AND RESPONSIBILITY FOR THE CONSTRUCTION. WHERE CONFLICTS OR OMISSIONS EXIST, THE JURISDICTIONAL GOVERNMENT ENGINEERING DEPARTMENT'S STANDARDS SHALL GOVERN. SUBSTITUTIONS AND DEVIATIONS FROM PLANS AND SPECIFICATIONS SHALL BE PERMITTED ONLY WHEN WRITTEN APPROVAL HAS BEEN ISSUED BY THE ENGINEER.

20.5. GUARANTEE - ALL MATERIALS AND EQUIPMENT TO BE FURNISHED AND/OR INSTALLED BY THE CONTRACTOR UNDER THIS CONTRACT, SHALL BE GUARANTEED FOR A PERIOD OF (1) ONE YEAR FROM THE DATE OF FINAL ACCEPTANCE THEREOF, AGAINST DEFECTIVE MATERIALS, DESIGN AND WORKMANSHIP. UPON RECEIPT OF NOTICE FROM THE OWNER OF FAILURE OF ANY PART OF THE GUARANTEED EQUIPMENT OR MATERIALS, DURING THE GUARANTEE PERIOD, THE AFFECTED PART OR MATERIALS SHALL BE REPLACED PROMPTLY WITH NEW PARTS OR MATERIALS BY THE CONTRACTOR, AT NO EXPENSE TO THE OWNER. IN THE EVENT THE CONTRACTOR FAILS TO MAKE NECESSARY REPLACEMENT OR REPAIRS WITHIN (7) SEVEN DAYS AFTER NOTIFICATION BY THE OWNER, THE OWNER MAY ACCOMPLISH THE WORK AT THE EXPENSE OF THE CONTRACTOR.

21. EARTHWORK

21.1. ALL AREAS WITHIN THE PROJECT LIMITS SHALL BE CLEARED AND GRUBBED PRIOR TO CONSTRUCTION. THIS SHALL CONSIST OF THE COMPLETE REMOVAL AND DISPOSAL OF ALL TREES, BRUSH, STUMPS, ROOTS, GRASS, WEEDS, RUBBISH AND ALL OTHER OBSTRUCTIONS RESTING ON OR PROTRUDING THROUGH THE SURFACE OF THE EXISTING GROUND TO A DEPTH OF 1'. ALL WORK SHALL BE IN ACCORDANCE WITH SECTION 110 OF THE STANDARD SPECIFICATIONS.

21.2. NONE OF THE EXISTING LIMEROCK MATERIAL FROM DEMOLISHED PAVEMENT IS TO BE INCORPORATED IN THE NEW LIMEROCK BASE, UNLESS NOTED IN PLANS. THE EXISTING LIMEROCK MATERIAL FROM DEMOLISHED PAVEMENT MAY BE INCORPORATED INTO THE STABILIZED SUBGRADE / SUBBASE, OR STABILIZED SHOULDER.

21.3. FILL MATERIAL SHALL BE IN ACCORDANCE WITH SECTION 120 AND 125 OF THE STANDARD SPECIFICATIONS.

21.4. ALL FILL MATERIAL IN AREAS NOT TO BE PAVED SHALL BE COMPACTED TO 95% OF THE MAXIMUM DENSITY AS DETERMINED BY AASHTO T-99.

21.5. ALL MATERIAL OF CONSTRUCTION SHALL BE SUBJECT TO INSPECTION AND TESTING TO ESTABLISH CONFORMANCE WITH THE SPECIFICATIONS AND SUITABLY FOR THE USES INTENDED. THE CONTRACTOR SHALL NOTIFY THE ENGINEER AT LEAST 24 HOURS PRIOR TO THE TIME CONTRACTOR WILL BE READY FOR AN INSPECTION OR TEST. THE CONTRACTOR SHALL FOLLOW CITY AND COUNTY INSPECTION PROCEDURES. THE CONTRACTOR SHALL NOT PROCEED WITH ANY PHASE OF WORK DEPENDENT ON AN INSPECTION OR TEST OF AN EARLIER PHASE OF WORK, PRIOR TO THAT TEST OR INSPECTION PASSING. THE CONTRACTOR SHALL BE RESPONSIBLE FOR PROVIDING CERTIFIED MATERIAL TEST RESULTS TO THE ENGINEER OF RECORD PRIOR TO THE RELEASE OF FINAL CERTIFICATION BY THE ENGINEER. TEST RESULTS MUST INCLUDE, BUT MAY NOT BE LIMITED TO, DENSITIES FOR SUBGRADE AND LIMEROCK, UTILITIES, EXCAVATION, ASPHALT GRADATION REPORTS, CONCRETE CYLINDERS, ETC.

21.6. WHEN MUCK, CLAY, ROCK, OR ANY OTHER MATERIAL THAT IS UNSUITABLE IN ITS ORIGINAL POSITION ARE ENCOUNTERED BENEATH PROPOSED PAVEMENT AND SIDEWALK AREAS, THE UNSUITABLE MATERIALS SHALL BE COMPLETELY REMOVED FROM BENEATH THE PAVEMENT AND SIDEWALK AREAS AND (10) TEN FEET BEYOND THE EDGE OF PAVEMENT. ALL SUCH UNSUITABLE MATERIAL REMOVED BY THE SUBSOIL EXCAVATION, SHALL BE REPLACED WITH ACCEPTABLE EMBANKMENT MATERIAL, AS SPECIFIED IN THE STANDARD SPECIFICATIONS.

21.7. WHEN MUCK, CLAY,HARDPAN OR ANY OTHER MATERIAL THAT IS UNSUITABLE IN ITS ORIGINAL POSITION, ARE ENCOUNTERED BENEATH PROPOSED DRAINAGE SWALES OR DRY RETENTION AREAS, THE UNSUITABLE MATERIALS SHALL BE COMPLETELY REMOVED FROM BENEATH THE DRAINAGE SWALES AND DRY RETENTION AREAS. ALL SUCH UNSUITABLE MATERIAL REMOVED BY THE SUBSOIL EXCAVATION, SHALL BE REPLACED WITH COARSE SAND, OR OTHER SUITABLE GRANULAR MATERIAL, AS SPECIFIED IN THE STANDARD SPECIFICATIONS.

21.8. ALL UNDERGROUND UTILITIES AND DRAINAGE INSTALLATIONS SHALL BE IN PLACE PRIOR TO SUBGRADE COMPACTION AND PAVEMENT CONSTRUCTION.

21.9. GROUND ADJACENT TO ROADWAY/PAVEMENT HAVING RUNOFF SHALL BE GRADED (2) TWO INCHES LOWER THAN THE EDGE OF PAVEMENT TO ALLOW FOR THE PLACEMENT OF SOD.

21.10. SITE GRADING ELEVATIONS SHALL BE WITHIN 0.1' OF THE REQUIRED ELEVATION FOR NON PAVED AREAS AND ALL AREAS SHALL BE GRADED TO DRAIN WITHOUT PONDING.

21.11. THE CONTRACTOR SHALL PERFORM ALL EXCAVATION, FILL, EMBANKMENT AND GRADING TO ACHIEVE THE PROPOSED PLAN GRADES INCLUDING TYPICAL ROAD SECTIONS, SIDE SLOPES AND CANAL SECTIONS. ALL WORK SHALL BE IN ACCORDANCE WITH SECTION 120 OF THE STANDARD SPECIFICATIONS. IF FILL MATERIAL IS REQUIRED IN EXCESS OF THAT GENERATED BY THE EXCAVATION, THE CONTRACTOR SHALL SUPPLY THIS MATERIAL AS REQUIRED FROM OFF-SITE.

21.12. A 2" BLANKET OF TOP SOIL SHALL BE PLACED OVER ALL AREAS TO BE SODDED OR SEEDED AND MULCHED WITHIN THE PROJECT LIMITS UNLESS OTHERWISE INDICATED ON THE PLANS.

21.13. SOD SHALL BE ST. AUGUSTINE UNLESS OTHERWISE INDICATED ON THE PLANS, AND SHALL BE PLACED ON THE GRADED TOP SOIL AND WATERED TO INSURE SATISFACTORY CONDITION UPON FINAL ACCEPTANCE OF THE PROJECT.

22. DRAINAGE

22.1. INLETS - ALL INLETS SHALL BE THE TYPE DESIGNATED ON THE PLANS, AND SHALL BE CONSTRUCTED IN ACCORDANCE WITH SECTION 425 OF THE STANDARD SPECIFICATIONS. ALL INLETS AND PIPE SHALL BE PROTECTED DURING CONSTRUCTION TO PREVENT SILTATION IN THE DRAINAGE SYSTEMS BY WAY OF TEMPORARY PLUGS AND PLYWOOD OR PLASTIC COVERS OVER THE INLETS. THE ENTIRE DRAINAGE SYSTEM SHALL BE CLEANED OF ALL DEBRIS PRIOR TO FINAL ACCEPTANCE.

22.2. PIPE SPECIFICATIONS: PIPE MATERIAL SHALL BE IN ACCORDANCE WITH SECTION 430 OF THE STANDARD SPECIFICATIONS, AND AS SHOWN IN THE PLANS.

22.3. PIPE BACKFILL - REQUIREMENTS FOR PIPE BACKFILL CROSSING ROADS OR PARKING AREAS SHALL BE AS DEFINED IN THE SECTION 125-8, OF THE STANDARD SPECIFICATIONS. PIPELINE BACKFILL SHALL BE PLACED IN 6 INCH LIFTS AND COMPACTED TO 100% OF THE STANDARD PROCTOR (AASHTO T-99 SPECIFICATIONS)

22.4. LOCATION OF DRAINAGE STRUCTURES SHALL GOVERN, AND PIPE LENGTH MAY HAVE TO BE ADJUSTED TO ACCOMPLISH CONSTRUCTION AS SHOWN ON THESE PLANS.

22.5. DISTANCE AND LENGTHS SHOWN ON PLANS AND PROFILE DRAWINGS ARE REFERENCED TO THE INNER WALLS OF STRUCTURES.

22.6. FILTER FABRIC SHALL BE MIRAFI, TYPAR OR EQUAL CONFORMING TO SECTION 985 OF THE STANDARD SPECIFICATIONS.

23. ASPHALT PAVING

23.1. WHERE NEW ASPHALT MEETS EXISTING ASPHALT, THE EXISTING ASPHALT SHALL BE SAW CUT TO PROVIDE A STRAIGHT EVEN LINE. PRIOR TO REMOVING CURB OR GUTTER, THE ADJACENT ASPHALT SHALL BE SAW CUT TO PROVIDE A STRAIGHT EVEN LINE.

23.2. INTERNAL ASPHALT PAVING CONSTRUCTED ON EXISTING SANDY SOILS SHALL BE CONSTRUCTED WITH A 12" SUBGRADE, COMPACTED TO A MINIMUM DENSITY OF 100% MAXIMUM DENSITY AS DETERMINED BY AASHTO T-99. THE COMPACTED SUBGRADE SHALL BE CONSTRUCTED IN THE LIMITS SHOWN ON THE PLANS. ALL SUBGRADE SHALL HAVE AN LBR OF 40 UNLESS OTHERWISE NOTED.

23.3. ASPHALTIC CONCRETE SURFACE COURSE SHALL BE CONSTRUCTED TO THE LIMITS SHOWN ON THE PLANS. THE SURFACE COURSE SHALL CONSIST OF THE THICKNESS AND TYPE ASPHALTIC CONCRETE AS SPECIFIED IN THE PLANS. ALL ASPHALTIC CONCRETE SHALL BE IN ACCORDANCE WITH SECTIONS 300, 320, 327, 330, 334, 337, 338, 339 AND 341 OF THE STANDARD SPECIFICATIONS.

23.4. LIMEROCK BASE SHALL BE PREPARED, COMPACTED AND GRADED AND SHALL BE IN ACCORDANCE WITH SECTION 200 OF THE STANDARD SPECIFICATIONS. ALL LIMEROCK SHALL BE COMPACTED TO 98% PER AASHTO T-180 AND HAVE NOT LESS THAN 70% OF CARBONATES OF CALCIUM AND MAGNESIUM UNLESS OTHERWISE DESIGNATED. THE ENGINEER SHALL INSPECT THE COMPLETED BASE COURSE AND THE CONTRACTOR SHALL CORRECT ANY DEFICIENCIES AND CLEAN THE BASE COURSE PRIOR TO THE PLACEMENT OF THE PRIME COAT. A TACK COAT WILL ALSO BE REQUIRED IF THE ENGINEER FINDS THAT THE PRIMED BASE HAS BECOME EXCESSIVELY DIRTY OR THE PRIME COAT HAS CURED TO THE EXTENT OF LOSING BOUNDING EFFECT PRIOR TO PLACEMENT OF THE ASPHALTIC CONCRETE SURFACE COURSE. THE PRIME AND TACK COATS SHALL BE IN ACCORDANCE WITH SECTION 300 OF THE STANDARD SPECIFICATIONS.

23.5. LIMEROCK BASE MATERIAL SHALL BE PLACED IN MAXIMUM 6" LIFTS. BASES GREATER THAN 6" SHALL BE PLACED IN TWO EQUAL LIFTS. IF, THROUGH FIELD TESTS, THE CONTRACTOR CAN DEMONSTRATE THAT THE COMPACTION EQUIPMENT CAN ACHIEVE DENSITY FOR THE FULL DEPTH OF A THICKER LIFT, AND IF APPROVED BY THE ENGINEER, THE BASE MAY BE CONSTRUCTED IN SUCCESSIVE COURSES OF NOT MORE THAN 8 INCHES (200 MM) COMPACTED THICKNESS.

23.6. ASPHALT EDGES THAT ARE NOT CURBED SHALL BE SAW CUT TO PROVIDE A STRAIGHT EVEN LINE TO THE DIMENSIONS SHOWN ON PLANS.

24. CONCRETE CONSTRUCTION

24.1. CONCRETE SIDEWALK AND DRIVEWAYS SHALL BE IN ACCORDANCE WITH SECTION 522 OF THE STANDARD SPECIFICATIONS AND IN ACCORDANCE WITH FDOT STANDARD PLANS FOR ROAD CONSTRUCTION, INDEX NO. 522-001, 522-002, AND 522-003. CONCRETE SIDEWALK SHALL BE 4" THICK, UNLESS OTHERWISE NOTED.

24.2. SIDEWALK CURB RAMPS SHALL BE IN ACCORDANCE WITH FDOT STANDARD PLANS FOR ROAD CONSTRUCTION , INDEX NO. 522-002.

24.3. CONCRETE CURB SHALL BE CONSTRUCTED TO THE LIMITS SHOWN ON THE PLANS. THE CONCRETE SHALL HAVE A MINIMUM COMPRESSIVE STRENGTH OF 2500 PSI AT 28 DAYS AND SHALL BE IN ACCORDANCE WITH SECTION 520 OF THE STANDARD SPECIFICATIONS. CONCRETE CURBING SHALL BE IN ACCORDANCE WITH FDOT STANDARD PLANS FOR ROAD CONSTRUCTION, INDEX NO. 520-001.

SECTION 30 - WATER DISTRIBUTION AND SANITARY SEWER FORCE MAINS.

30. MATERIALS:

NOTE: IF MATERIALS LIST HERE ON ARE IN CONFLICT WITH UTILITY OWNER, MATERIAL OWNER REQUIREMENTS SHALL GOVERN.

30.1. ALL WATER MAIN PIPE, INCLUDING FITTINGS, SHALL BE COLOR CODED OR MARKED USING BLUE AS A PREDOMINANT COLOR TO DIFFERENTIATE DRINKING WATER FROM RECLAIMED OR OTHER WATER. UNDERGROUND PLASTIC PIPE SHALL BE SOLID-WALL BLUE PIPE, SHALL HAVE A CO-EXTRUDED BLUE EXTERNAL SKIN, OR SHALL BE WHITE OR BLACK PIPE WITH BLUE STRIPES INCORPORATED INTO, OR APPLIED TO, THE PIPE WALL; AND UNDERGROUND METAL OR CONCRETE PIPE SHALL HAVE BLUE STRIPES APPLIED TO THE PIPE WALL. PIPE STRIPED DURING MANUFACTURING OF THE PIPE SHALL HAVE CONTINUOUS STRIPES THAT RUN PARALLEL TO THE AXIS OF THE PIPE, THAT ARE LOCATED AT NO GREATER THAN 90-DEGREE INTERVALS AROUND THE PIPE, AND THAT WILL REMAIN INTACT DURING AND AFTER INSTALLATION OF THE PIPE. IF TAPE OR PAINT IS USED TO STRIPE PIPE DURING INSTALLATION OF THE PIPE, THE TAPE OR PAINT SHALL BE APPLIED IN A CONTINUOUS LINE THAT RUNS PARALLEL TO THE AXIS OF THE PIPE AND THAT IS LOCATED ALONG THE TOP OF THE PIPE; FOR PIPES WITH AN INTERNAL DIAMETER OF 24 INCHES OR GREATER, TAPE OR PAINT SHALL BE APPLIED IN CONTINUOUS LINES ALONG EACH SIDE OF THE PIPE AS WELL AS ALONG THE TOP OF THE PIPE.

30.2. DUCTILE IRON PIPE FOR WATER DISTRIBUTION MAINS SHALL CONFORM TO ANSI/AWWA STANDARD C151/A21.51 LATEST REVISION, "DUCTILE IRON PIPE CENTRIFUGALLY CAST IN METAL MOLDS OR SAND-LINED MOLDS" WITH A MINIMUM WALL THICKNESS OF CLASS 51 (PRESSURE CLASS 350) UNLESS OTHERWISE NOTED IN THE PLANS. DUCTILE IRON PIPE SHALL BE CEMENT LINED AND SEAL COATED IN ACCORDANCE WITH ANSI/AWWA STANDARD C104/A21.4 LATEST REVISION. THE PIPE SHALL BE ADAPTED FOR USE WITH CLASS 250 FITTINGS FOR ALL SIZES. WATER MAIN SHALL BE COLORED BLUE IN ACCORDANCE WITH FLORIDA STATE STATUTES.

30.3. DUCTILE IRON PIPE FOR SEWAGE FORCE MAINS SHALL CONFORM TO ANSI/AWWA STANDARD C151/A21.51 LATEST REVISION, "DUCTILE IRON PIPE CENTRIFUGALLY CAST IN METAL MOLDS OR SAND- LINED MOLDS" WITH A MINIMUM WALL THICKNESS OF CLASS 51 (PRESSURE CLASS 350) UNLESS OTHERWISE NOTED IN THE PLANS. DUCTILE IRON PIPE SHALL BE INTERIOR CERAMIC EPOXY LINED AND EXTERIOR COATED WITH THE MANUFACTURER'S COATING SYSTEM (PROTECTO 401 CERAMIC EPOXY WITH A MINIMUM DRY FILM THICKNESS OF 40 MILS AND AN OUTSIDE COATING OF EITHER COAL TAR EPOXY OR ASPHALT). CEMENT MORTARED LININGS ARE NOT APPROPRIATE FOR THIS APPLICATION.

30.4. ALL PIPE & FITTINGS ON THE LIFT STATION SITES SHALL BE DUCTILE IRON CONFORMING TO THE SAME SPECIFICATIONS AS ABOVE FOR SEWAGE FORCE MAINS EXCEPT THAT FLANGED DUCTILE IRON PIPE & FITTINGS SHALL BE USED INSIDE VALVE PITS AND WET WELLS. FLANGED PIPE AND FITTINGS SHALL CONFORM TO ANSI/AWWA C115/A21.15 LATEST REVISION AND ANSI/AWWA C110/A21.10 LATEST REVISION. THE FOLLOWING THICKNESS CLASSES SHALL BE ADHERED TO: 4" - 12" - CLASS 52, 14" & LARGER - CLASS 51.

30.5. PVC PRESSURE PIPE FOR SIZES 4" THROUGH 12" AND SHALL CONFORM TO ANSI/AWWA STANDARD C900 LATEST REVISION. PVC PRESSURE PIPE SHALL BE MADE FROM CLASS 12454-A OR CLASS 12454-B VIRGIN MATERIAL AND CONFORM WITH THE OUTSIDE DIAMETER OF CAST IRON PIPE WITH A MINIMUM WALL THICKNESS OF DR SERIES 18. ULTRA VIOLET DEGRADATION OR SUN BLEACHED PIPE WILL BE CAUSE FOR REJECTION. WATER MAIN SHALL BE COLORED BLUE IN ACCORDANCE WITH FLORIDA STATE STATUTES. FORCE MAIN SHALL BE IMPREGNATED WITH GREEN PIGMENT. REUSE MAIN SHALL BE IMPREGNATED WITH PURPLE PIGMENT.

30.6. DUCTILE IRON FITTINGS FOR WATER DISTRIBUTION MAINS SHALL CONFORM TO ANSI/AWWA STANDARD C110/A21.10 LATEST REVISION. FITTINGS 4" AND LARGER SHALL BE CEMENT LINED AND SEAL COATED IN ACCORDANCE WITH ANSI/AWWA STANDARD C104/A21.4 LATEST REVISION. WATER MAIN FITTING SHALL BE COLORED BLUE IN ACCORDANCE WITH FLORIDA STATE STATUTES.

30.7. CAST IRON AND DUCTILE IRON FITTINGS FOR SEWAGE FORCE MAINS SHALL CONFORM TO ANSI/AWWA STANDARD C110/A21.10 LATEST REVISION. FITTINGS 4" AND LARGER SHALL BE COATED IN ACCORDANCE WITH THE REQUIREMENTS OF DUCTILE IRON PIPE FOR SEWAGE FORCE MAINS.

30.8. JOINTS FOR BELL AND SPIGOT DUCTILE IRON PIPE AND FITTINGS SHALL CONFORM TO ANSI/AWWA STANDARD C111/A21.11 LATEST REVISION. MECHANICAL JOINT OR PUSH-ON JOINT TO BE RUBBER GASKET COMPRESSION-TYPE. SPECIAL FITTINGS AND JOINTS SHALL BE CONSIDERED FOR SPECIFIC INSTALLATION SUBJECT TO THE APPROVAL OF THE ENGINEER.

30.9. JOINTS FOR PVC PRESSURE PIPE SHALL BE BELL AND SPIGOT PUSH-ON RUBBER GASKET TYPE ONLY. NO SOLVENT WELD OR THREADED JOINTS WILL BE PERMITTED.

30.10. WATER DISTRIBUTION SYSTEM RESTRAINT: ALL FITTINGS AND SPECIFIC PIPE JOINTS SHALL BE RESTRAINED AS OUTLINED BELOW:

- JOINT RESTRAINT
- PUSH-ON P.V.C. EBAA IRON SERIES 1600
- PUSH-ON DIP EBAA IRON SERIES 1700
- TR-FLEX BY U.S. PIPE OR
- FLEX RING BY AMERICAN
- FITTINGS W/ DIP EBAA IRON SERIES 1100 MEGALUG
- FITTINGS W/ P.V.C. EBAA IRON SERIES 2000 MEGALUG
- LENGTH OF RESTRAINED PIPE SHALL BE AS INDICATED ON RESTRAINED JOINT PIPE DETAIL. (SEE WATER & SEWER DETAIL SHEET)

30.11. SEWAGE FORCE MAIN SYSTEM RESTRAINT: ALL FITTINGS AND SPECIFIC PIPE JOINTS SHALL BE RESTRAINED AS OUTLINED BELOW

- JOINT RESTRAINT
- PUSH-ON P.V.C. EBAA IRON SERIES 1600
- PUSH-ON DIP EBAA IRON SERIES 1700
- TR-FLEX BY U.S. PIPE OR
- FLEX RING BY AMERICAN
- FITTINGS W/ DIP EBAA IRON SERIES 1100 MEGALUG
- FITTINGS W/ P.V.C. EBAA IRON SERIES 2000 MEGALUG
- LENGTH OF RESTRAINED PIPE SHALL BE AS INDICATED ON RESTRAINED JOINT PIPE DETAIL. (SEE WATER & SEWER DETAIL SHEET)

30.12. WATER DISTRIBUTION VALVES SHALL BE GATE VALVES, IRON BODY, FULLY RESILIENT SEAT BRONZED MOUNTED NON-RISING STEM, RATED AT 200 PSI AND CONFORMING TO ANSI/AWWA C509 LATEST REVISION, AND SHALL HAVE MECHANICAL JOINTS.

30.12.1.1. GATE VALVES 4" AND LARGER SHALL BE MUELLER A-2361/2362, AMERICAN 250 LINE OR CLOW F-6100, CONFORMING TO ANSI/AWWA C500 LATEST REVISION OR APPROVED EQUAL.

30.12.1.2. TAPPING VALVES SHALL BE MUELLER T-2361/2362 OR APPROVED EQUAL.

30.12.1.3. GATE VALVES 3" OR LESS SHALL BE NIBCO T-133 OR T-136 WITH MALLEABLE HAND WHEELS OR APPROVED EQUAL.

30.13. TAPPING SLEEVES SHALL BE MUELLER H615, CLOW F- 2505 OR APPROVED EQUAL.

30.14. VALVE BOXES SHALL BE U.S. FOUNDRY 7500 OR APPROVED EQUAL PAINTED BLUE WITH THE DESIGNATION "WATER".

30.15. RETAINER GLANDS FOR DIP SHALL CONFORM TO ANSI/AWWA C111/A21.11 LATEST REVISION. ALL GLANDS SHALL BE MANUFACTURED FROM DUCTILE IRON AS LISTED BY UNDERWRITERS LABORATORIES FOR 250 PSI MINIMUM WATER PRESSURE RATING. CLOW CORPORATION MODEL F-1058, STANDARD FIRE PROTECTION EQUIPMENT COMPANY OR APPROVED EQUAL.

30.16. DRESSER COUPLINGS SHALL BE REGULAR BLACK COUPLINGS WITH PLAIN GASKETS FOR GALVANIZED STEEL PIPE. THEY SHALL BE DRESSER STYLE 90. NO SUBSTITUTIONS ALLOWED.

30.17. FIRE HYDRANTS SHALL BE MUELLER CENTURION TRAFFIC TYPE A-423 WITH 5 1/4" INTERNAL VALVE OPENING OR APPROVED EQUAL. PUMPER NOZZLE TO BE 18" FROM FINISHED GRADE. ALL HYDRANTS TO BE INSTALLED WITH CONTROL VALVE. RETAINER GLANDS ARE PREFERRED FOR RESTRAINING. FIRE HYDRANT SHALL COMPLY WITH ANSI/AWWA C502 LATEST REVISION. FIRE HYDRANTS SHALL BE PAINTED IN ACCORDANCE WITH NFPA #291 OR PER AGENCY STANDARDS HAVING JURISDICTION. BLUE RAISED REFLECTIVE PAVEMENT MARKER (RPM) SHALL BE USED TO IDENTIFY FIRE HYDRANT LOCATION. THE PLACEMENT OF THE RPM TO BE AT THE CENTERLINE OF THE OUTSIDE ROADWAY LANE.

30.18. SEWAGE FORCE MAIN VALVES SHALL BE PLUG VALVES WHICH SHALL BE OF THE NON-LUBRICATED, ECCENTRIC TYPE WITH RESILIENT FACED PLUGS, PORT AREAS FOR VALVES 20 INCHES AND SMALLER SHALL BE AT LEAST 80% OF FULL PIPE AREA. PORT AREA OF VALVES 24 INCHES AND LARGER SHALL BE AT LEAST 70% OF FULL PIPE AREA. THE BODY SHALL BE OF SEMI-STEEL (ASTM A-126 C1.B) AND SHALL HAVE BOLTED BONNET WHICH GIVES ACCESS TO THE INTERNALS OF THE VALVE. SEATS SHALL BE WELDED OVERLAY OF HIGH NICKEL CONTENT OR A STAINLESS STEEL PLATE LOCKED IN THE BODY CAVITY. IF A PLATE IS USED, IT SHALL BE REPLACEABLE THROUGH THE BONNET ACCESS. BEARINGS SHALL BE PERMANENTLY LUBRICATED OF STAINLESS STEEL, BRONZE OR TEFLON LINED, FIBER GLASS BACKED DURALON. BEARING AREAS SHALL BE ISOLATED FROM THE FLOW WITH GRIT SEALS. VALVES SHALL HAVE PACKING BONNETS WHERE THE SHAFT PROTRUDES FROM THE VALVE AND THE PACKING SHALL BE SELF-ADJUSTING CHEVRON TYPE WHICH CAN BE REPLACED WITHOUT REMOVING THE BONNET. ALL NUTS, BOLTS, SPRINGS AND WASHERS SHALL BE STAINLESS STEEL.

30.19. PLUG VALVES SHALL BE DESIGNED FOR A WORKING PRESSURE OF 150 PSI THE VALVE AND ACTUATOR SHALL BE CAPABLE OF SATISFACTORY OPERATION IN EITHER DIRECTION OF FLOW AGAINST PRESSURE DROPS UP TO AND INCLUDING 100 PSI (FOR PLUG VALVES OVER 12" IN DIAMETER). VALVES SHALL BE BUBBLE TIGHT IN BOTH DIRECTIONS AT 100 PSI DIFFERENTIAL. PLUG VALVES OVER 12" IN DIAMETER SHALL HAVE WORM GEAR OPERATORS. THE OPERATING MECHANISM SHALL BE FOR BURIED SERVICE WITH A 2 INCH SQUARE OPERATING NUT.

30.20. PLUG VALVES ARE TO BE INSTALLED WITH THE SEAT POINTED TOWARDS THE UPSTREAM FLOW, WHEN SPECIFIED.

30.21. SWING CHECK VALVES FOR WATER, SEWAGE, SLUDGE, AND GENERAL SERVICE SHALL BE OF THE OUTSIDE LEVER AND SPRING OR WEIGHT TYPE, IN ACCORDANCE WITH ANSI/AWWA C 508 LATEST REVISION SWING-CHECK VALVES FOR WATERWORKS SERVICE, 2" THROUGH 24" NPS, UNLESS OTHERWISE INDICATED, WITH FULL-OPENING PASSAGES, DESIGNED FOR A WATER-WORKING PRESSURE OF 150 PSI THEY SHALL HAVE A FLANGED COVER PIECE TO PROVIDE ACCESS TO THE DISC.

30.22. HIGH DENSITY POLYETHYLENE PIPE (HDPE) FOR WATER DISTRIBUTION MAINS SHALL CONFORM TO AWWA C906 STANDARD, LATEST REVISION. PIPES SHALL BE COLOR-CODED BLUE, MINIMUM 40 FEET STANDARD LENGTHS.

31. SERVICE CONNECTION:

31.1. SERVICE SADDLES SHALL BE FUSION BONDED PLASTIC COATED DUCTILE IRON (ASTM A536) WITH STAINLESS STEEL STRAPS, SADDLES SHALL BE DOUBLE STRAP TYPE.

31.2. SERVICE LINES SHALL BE POLYETHYLENE (PE 3408), 200 P.S.I RATED, DR9. PIPE JOINTS SHALL BE OF THE COMPRESSION TYPE TOTALLY CONFINED GRIP SEAL AND COUPLING NUT.

31.3. CORPORATION STOPS SHALL BE MANUFACTURED OF BRASS ALLOY IN ACCORDANCE WITH ASTM B-62 WITH THREADED ENDS, AS MANUFACTURED BY FORD BALLCORP, CATALOG # 1100 OR APPROVED EQUAL.

31.4. CURB STOPS SHALL BE FORD V63-44W-X" LATEST REVISION OR APPROVED EQUAL.

31.5. METER STOPS SHALL BE 90 DEGREE LOCKWING TYPE AND SHALL BE OF BRONZE CONSTRUCTION IN ACCORDANCE FV63-777W" LATEST REVISION WITH ASTM B-62. METER STOPS SHALL BE CLOSED BOTTOM DESIGN AND RESILIENT "0" RING SEALED AGAINST EXTERNAL LEAKAGE AT THE TOP. STOPS SHALL BE EQUIPPED WITH A METER COUPLING NUT ON THE OUTLET SIDES, AS MANUFACTURED BY FORD OR APPROVED EQUAL.

32. INSTALLATION:

32.1. WHERE RESTRAINED PIPE JOINTS ARE REQUIRED DUE TO FITTINGS, APPURTENANCES, ETC., PIPE MATERIAL SHALL BE DIP

32.2. ALL PVC PIPE SHALL BE INSTALLED IN ACCORDANCE WITH THE UNI-BELL PLASTIC PIPE ASSOCIATION "GUIDE FOR INSTALLATION OF PVC PRESSURE PIPE FOR MUNICIPAL WATER DISTRIBUTION SYSTEM," AND ANSI/AWWA C605-XX LATEST REVISION STANDARD.

32.3. ALL DIP SHALL BE INSTALLED IN ACCORDANCE WITH ANSI/ C600-XX LATEST REVISION.

32.4. ALL WATER MAINS SHALL TYPICALLY BE LAID WITH A MINIMUM 36" COVER FOR PVC AND 30" COVER FOR DIP.

32.5. DETECTOR TAPE SHALL BE LAID 18 INCHES ABOVE ALL WATER AND SEWER LINES. A 14 GAUGE MULTI-STRAND WIRE SHALL BE ATTACHED TO ALL NONCONDUCTIVE WATER MAINS TO FACILITATE LOCATION. AN EXTRA 4 FEET OF WIRE SHALL BE PROVIDED AT ALL VALVES, BLOW-OFFS, HYDRANTS, ETC. THE WIRE SHALL BE TESTED FOR CONTINUITY AT THE PRESSURE TEST.

32.6. PIPE DEFLECTION SHALL NOT EXCEED 50% OF THE MAXIMUM DEFLECTION RECOMMENDED BY THE MANUFACTURER.

32.7. A CONTINUOUS AND UNIFORM BEDDING SHALL BE PROVIDED. BACKFILL MATERIAL SHALL BE PLACED IN ACCORDANCE WITH THE PLANS AND SPECIFICATIONS.

32.8. ALL VALVES SHALL BE INSTALLED WITH ADJUSTABLE CAST IRON VALVE BOXES WITH THE WORD "WATER" OR "SEWER", AS APPLICABLE, CAST IN THE COVER. U.S. FOUNDRY OR APPROVED EQUAL.

33. TESTING:

33.1. BEFORE ANY PHYSICAL CONNECTIONS AND ACCEPTANCE FOR OPERATION TO THE EXISTING WATER MAINS ARE MADE, THE COMPLETE WATER SYSTEM SHALL BE FLUSHED, PRESSURE TESTED AND DISINFECTED. COPIES OF PASSING BACTERIOLOGICAL RESULTS AND PRESSURE TEST RESULTS MUST BE SUBMITTED TO, AND APPROVED BY, THE ENGINEER, UTILITY OWNER, AND HEALTH DEPARTMENT. HYDROSTATIC TESTING OF NEW MAINS SHALL BE PERFORMED AT A MINIMUM STARTING PRESSURE OF 150 PSI FOR TWO HOURS IN ACCORDANCE WITH ANSI/AWWA C600-05 (HYDROSTATIC TEST). THE PRESSURE TEST SHALL NOT VARY MORE THAN 5 PSI DURING THE TEST. THE ALLOWABLE LEAKAGE DURING THE PRESSURE TEST SHALL BE LESS THAN THE NUMBER OF GALLONS PER HOUR AS DETERMINED BY THE FORMULA:

L = (SD(P)1/2)/148,000.

IN WHICH L EQUALS THE ALLOWABLE LEAKAGE IN GALLONS PER HOUR. S EQUALS LENGTH OF PIPE (LINEAR FEET), D EQUALS NOMINAL DIAMETER OF PIPE (INCHES) AND P EQUALS THE AVERAGE TEST PRESSURE (POUNDS PER SQUARE INCH GAUGE). MAXIMUM LENGTH OF TEST PIPE SECTION SHOULD BE 2000 FEET. THE WATER SYSTEM SHALL BE DISINFECTED IN ACCORDANCE WITH THE ANSI/AWWA C651-05 (WATER MAIN BACTERIOLOGICAL TESTS).

33.2. THE PRESSURE TEST SHALL BE WITNESSED BY A REPRESENTATIVE OF THE UTILITY OWNER AND THE ENGINEER OF RECORD.

33.3. FOR WATER DISTRIBUTION PIPES, SAMPLING POINTS SHALL BE PROVIDED BY THE CONTRACTOR AT THE LOCATIONS SHOWN ON THE PLANS.

33.4. FOR WATER DISTRIBUTION PIPES, DISINFECTION AND BACTERIOLOGICAL TESTING SHALL BE IN ACCORDANCE WITH ANSI/AWWA C651-14 (WATER MAIN BACTERIOLOGICAL TESTS). MAXIMUM DISTANCE BETWEEN SAMPLING POINTS SHALL BE AS FOLLOWS:

- TRANSMISSION MAINS: EVERY 1200 FEET
- BRANCH MAINS: EVERY 1000 FEET
- ISOLATED MAINS < 1000 FEET: 2 SAMPLE POINTS
- ISOLATED MAINS > 1000 FEET: 3 SAMPLE POINTS

SECTION 40 - GRAVITY SANITARY SEWER COLLECTION SYSTEM

40. GENERAL:

40.1. MANHOLE, VALVE BOX, METER BOX AND OTHER STRUCTURE RIM ELEVATIONS WITHIN THE LIMITS OF CONSTRUCTION ARE TO BE ADJUSTED TO CONFORM TO PLAN GRADES PROPOSED IN THESE PLANS. IF NO OTHER INDIVIDUAL COST ITEM IS INCLUDED IN THE CONTRACT SCHEDULE FOR A PARTICULAR STRUCTURE ADJUSTMENT.

40.2. DISTANCE AND LENGTHS SHOWN ON PLANS AND PROFILE DRAWINGS ARE REFERENCED TO THE CENTER OF STRUCTURES.

41. MATERIALS:

NOTE: IF MATERIALS LIST HERE ON ARE IN CONFLICT WITH UTILITY OWNER, MATERIAL OWNER REQUIREMENTS SHALL GOVERN.

41.1. ALL PVC SEWER PIPE AND FITTINGS SHALL BE NON-PRESSURE POLYVINYL CHLORIDE (PVC) PIPE CONFORMING TO ASTM D 3034, SDR 26, WITH PUSH-ON RUBBER GASKET JOINTS.

41.2. DUCTILE IRON PIPE SHALL CONFORM TO ANSI/AWWA C151/A21.51-XX LATEST REVISION, "DUCTILE IRON PIPE CENTRIFUGALLY CAST IN METAL MOLDS OR SAND-LINED MOLDS" WITH WALL THICKNESS CLASS 51 FOR 8" AND ABOVE, CLASS 52 FOR 4" AND 6", UNLESS OTHERWISE DIRECTED BY THE ENGINEER. DUCTILE IRON PIPE SHALL BE EPOXY LINED OR COATED WITH THE MANUFACTURER'S COATING SYSTEM AS APPROVED BY THE ENGINEER OF RECORD AND THE LOCAL MUNICIPALITY OR UTILITY OWNER. IN EITHER CASE, THE ENGINEER'S REVIEW AND APPROVAL IS REQUIRED FOR EITHER ALTERNATIVE PRIOR TO CONSTRUCTION. CEMENT MORTARED LININGS ARE NOT APPROPRIATE FOR THIS APPLICATION.

41.3. ALL DUCTILE IRON FITTINGS SHALL CONFORM TO ANSI/AWWA STANDARD C110/A21.10-XX LATEST REVISION. ALL FITTINGS AND ACCESSORIES SHALL BE EPOXY LINED AND AS MANUFACTURED OR SUPPLIED BY THE PIPE MANUFACTURER OR APPROVED EQUAL.

41.4. MANHOLES SHALL BE PRECAST PER ASTM C 478 AND IN ACCORDANCE WITH THE PLANS AND SPECIFICATIONS.

41.5. MANHOLES ARE TO BE SEALED WITH TYPE II SULPHATE RESISTANT CEMENT OR APPROVED EQUAL - NO MOLDING PLASTER.

41.6. JOINTS FOR BELL AND SPIGOT DUCTILE IRON PIPE AND FITTINGS SHALL CONFORM TO ANSI/AWWA STANDARD C111/A21.11-XX LATEST REVISION. MECHANICAL JOINT OR PUSH-ON JOINT TO BE RUBBER GASKET COMPRESSION- TYPE.

41.7. PVC CLEAN-OUTS TO HAVE SCREW TYPE ACCESS PLUG. LONG RADIUS WYE CONNECTIONS AND FITTINGS SHALL BE USED IN ORDER TO ACCESS CLEAN-OUT OPERATIONS.

41.8. CLEANOUTS SHALL BE INSTALLED AT ALL SEWER SERVICES EXCEEDING 100' IN LENGTH (EVERY 100') WITH A CLEAN OUT AT THE PROPERTY LINE, EASEMENT LINE, OR 5' FROM A BUILDING. THE CONTRACTOR SHALL COORDINATE THE LOCATION OF THE BUILDING CLEANOUT (5' FROM THE BUILDING) AND ELEVATION OF THE END OF THE SEWER SERVICE WITH THE BUILDING PLUMBING CONTRACTOR. CLEANOUTS SHALL BE THE SAME SIZE AS THE SERVICE LATERAL IN WHICH THEY ARE INSTALLED.

42. INSTALLATION:

42.1. PVC SEWER PIPE SHALL BE LAID IN ACCORDANCE WITH ASTM D 2321 AND THE UNI-BELL PLASTIC PIPE ASSOCIATION'S "RECOMMENDED PRACTICE FOR THE INSTALLATION OF PVC SEWER PIPE."

42.2. DIP SHALL BE INSTALLED IN ACCORDANCE WITH ANSI/AWWA C-600-XX LATEST REVISION.

42.3. PIPE TO MANHOLE CONNECTION TO BE FERNCO NEOPRENE BOOT COUPLINGS WITH STAINLESS STEEL ACCESSORIES OR APPROVED EQUAL.

42.4. MANHOLES SHALL BE SET PLUMB TO LINE AND GRADE ON FIRM SUBGRADE PROVIDING UNIFORM BEARING UNDER THE BASE.

42.5. ALL OPENINGS AND JOINTS SHALL BE SEALED WATERTIGHT.

42.6. TWO COATS OF KOPPERS 300-M, FIRST RED, SECOND ONE BLACK, SHALL BE APPLIED TO THE INSIDE OF ALL MANHOLES AND SHALL BE APPLIED IN ACCORDANCE WITH THE MANUFACTURER'S SPECIFICATIONS (16 MILS PER COAT). COATING AS REQUIRED BY UTILITY OWNER OR ENGINEER SHALL BE APPLIED TO THE OUTSIDE OF THE MANHOLE. THE INTERIOR COATS SHALL BE APPLIED AFTER SEWER LAMPING OF LINES. AFTER THE APPLICATION OF EACH COAT, THE UTILITY OWNER AND ENGINEER SHALL INSPECT THE MANHOLES. THE INSPECTION SHALL BE SCHEDULED A MINIMUM OF 48 HOURS PRIOR TO INSPECTION.

43. TESTING: TESTING OF GRAVITY SEWER MAINS AND LATERALS SHALL BE IN ACCORDANCE WITH THE UTILITY OWNER'S MINIMUM DESIGN AND CONSTRUCTION STANDARDS LATEST REVISION.

43.1. AFTER CONSTRUCTION OF THE SEWER SYSTEM, THE ENGINEER MAY REQUIRE A VISUAL INFILTRATION AND/OR EXFILTRATION TEST TO BE PERFORMED ON THE ENTIRE SYSTEM OR ANY PART THEREOF.

43.2. AN AIR TEST MAY BE SUBSTITUTED FOR THE WATER EXFILTRATION TEST, UPON APPROVAL OF THE ENGINEER.

43.3. THE ALLOWABLE LIMITS OF SEWER PIPE LEAKAGE FOR GRAVITY SEWER MAINS SHALL NOT EXCEED 100 GALLONS PER INCH OF INSIDE PIPE DIAMETER PER MILE PER DAY FOR ANY SECTION TESTED. NO VISIBLE LEAKAGE SHALL BE ALLOWED.

43.4. THE INSTALLED SEWERS MAY REQUIRE VIDEO INSPECTIONS.

PROJECT LEAD & CIVIL ENGINEERING:

KEITH
301 EAST ATLANTIC BLVD.
POMPANO BEACH, FL 33060
PH: (954) 788-3400
Florida Engineering Business License: CA7928
Florida Surveyor and Mapper Business License: LB6860
Florida Landscape Architecture Business License: LC26000457

LANDSCAPE ARCHITECT:

MKSK
801 INTERNATIONAL PARKWAY
LAKE MARY, FL 32746
407.871.9607
MKSKSTUDIOS.COM

ARCHITECT:

WANNEMACHER JENSEN ARCHITECTS
815 NORTHWEST 57 AVE. SUITE 219
MIAMI, FLORIDA 33126
727-822-5566
WJARC.COM AA0002277

MECHANICAL, PLUMBING, & ELECTRICAL ENGINEERING:

SGM ENGINEERING
5301 WATERFORD DISTRICT DR.
SUITE 750
954-421-1944
SGMENGINEERING.COM CA-00006208

REVISIONS

NO.	DESCRIPTION	DATE
	ISSUED FOR BUILDING PERMIT	11/21/2024
	REVISED FOR BUILDING PERMIT	01/10/2025

ISSUE DATE:	03/02/2025
DESIGNED BY:	BB, NW
DRAWN BY:	CD, BB
CHECKED BY:	TD

This item has been digitally signed and sealed by **Thomas F. Donahue**, P.E. on the date adjacent to the seal.

THOMAS F. DONAHUE LICENSE No. 60529 STATE OF FLORIDA PROFESSIONAL ENGINEER

Signature must be verified on any electronic copies.

2026.03.04 08:27:07-05'00'

THOMAS F. DONAHUE, P.E.
FLORIDA REG. NO. 60529
(FOR THE FIRM)

CLIENT
VILLAGE OF PINECREST
PINECREST PARKS & RECREATION

PROJECT
GARY MATZNER PARK

SHEET TITLE
CONSTRUCTION SPECIFICATIONS

SHEET NUMBER GI-003

KEITH PROJECT NUMBER 13861.00

Plotted by: halba On 3/3/2026 3:40 PM

Drawing name: K:\13861.00 - Gary Matzner Park Design - Village of Pinecrest\Engineering\Cadd\13861-00-GI-000.dwg

STATUS: CONSTRUCTION DOCUMENTS

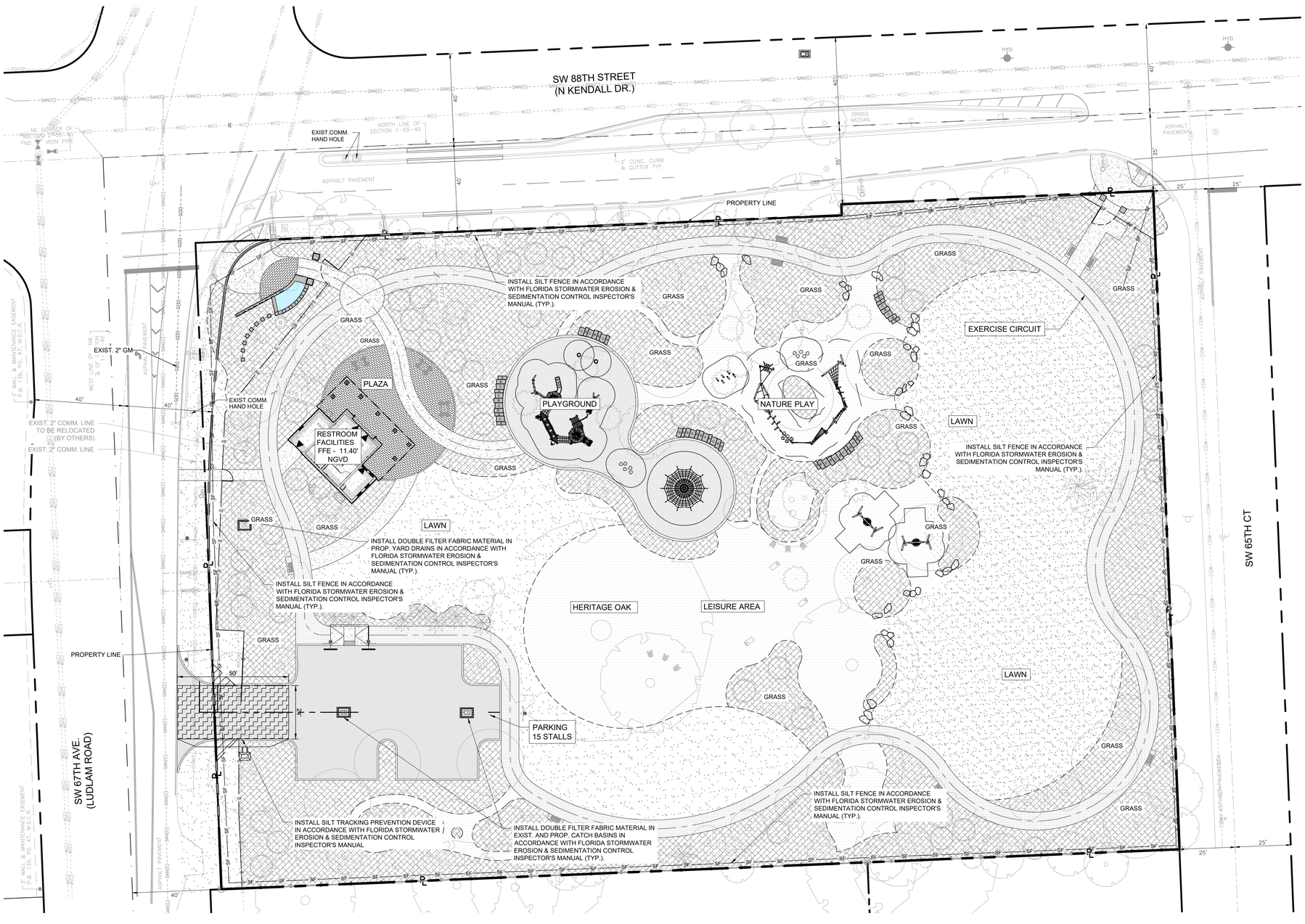

N

GRAPHIC SCALE

0 20 40

SCALE: 1" = 20 '

NOTE: PRINTED DRAWING SIZE MAY HAVE CHANGED FROM ORIGINAL. VERIFY SCALE USING BAR SCALE ABOVE.

GENERAL NOTES:

1. THE CONTRACTOR SHALL INSTALL AND MAINTAIN EROSION CONTROL AND SEDIMENTATION CONTROL MEASURES IN ACCORDANCE WITH THE STANDARDS FOR SOIL EROSION AND SEDIMENT CONTROL IN FLORIDA (HEREAFTER REFERRED TO AS FL GUIDELINES).

2. MAINTENANCE MEASURES SHALL BE APPLIED AS NEEDED DURING THE ENTIRE CONSTRUCTION PERIOD. AFTER EACH RAINFALL, A VISUAL INSPECTION SHALL BE MADE OF ALL INSTALLED EROSION CONTROL MEASURES AND REPAIRS SHALL BE CONDUCTED TO ENSURE THEIR CONTINUING FUNCTION AS DESIGNED.

3. ALL EXISTING/NEW CATCH BASIN, INLETS, STORM SEWER MANHOLES STRUCTURES WITHIN THE WORK AREAS, ETC. SHALL BE PROTECTED DURING CONSTRUCTION OPERATIONS FROM SEDIMENT RUNOFF AND DEBRIS BY PLACING A FILTER FABRIC MATERIAL IN THE FRAME AND GRATE/MANHOLE COVER. PREVENTIVE METHODS MUST BE UTILIZED AROUND THESE STRUCTURES (DURING CONSTRUCTION OPERATIONS) BY GRADING TO DRAIN AWAY FROM STRUCTURES AND ANY OTHER METHODS APPROVED BY THE AGENCY HAVING JURISDICTION OR DESIGN ENGINEER OF RECORD.

4. THE CONTRACTOR SHALL INSTALL A SOIL TRACKING PREVENTION DEVICE AS PER THE FLORIDA STORMWATER EROSION AND SEDIMENTATION CONTROL INSPECTOR'S MANUAL. THE CONTRACTOR SHALL TAKE MEASURES TO INSURE THE CLEANUP OF SEDIMENTS THAT HAVE BEEN TRACKED BY VEHICLES OR HAVE BEEN TRANSPORTED BY WIND OR STORM WATER ABOUT THE SITE OR ONTO NEARBY ROADWAYS. STABILIZED CONSTRUCTION ENTRANCES AND CONSTRUCTION ROADS, IF APPROPRIATE, SHALL BE IMPLEMENTED IN ORDER TO REDUCE OFFSITE TRACKING.

5. ALL AREAS OF DISTURBANCE THAT ARE NOT WITHIN BUILDING OR PAVEMENT LIMITS SHALL BE SODDED, REFER TO LANDSCAPE PLANS FOR SOD SPECIFICATION AND REQUIREMENTS.

6. REMOVE ALL EROSION CONTROL IMPROVEMENTS AFTER ALL DISTURBED AREAS ARE STABILIZED WITH THE FINAL GROUND COVER.

7. THE CONTRACTOR SHALL BE RESPONSIBLE FOR READING AND FAMILIARIZING THEMSELVES WITH ALL THE PERMITS PREVIOUSLY ACQUIRED FOR THIS PROJECT. THE CONDITIONS OUTLINED IN THE PERMITS ARE IN FORCE AND FULL EFFECT AS PART OF THE PROPOSED IMPROVEMENTS. THE CONTRACTOR IS RESPONSIBLE FOR ENSURING ALL WORK ASSOCIATED WITH THIS PROJECT IS IN COMPLIANCE WITH ALL OF THE REQUIREMENTS OF THESE PERMITS.

8. THE CONTRACTOR WILL BE RESPONSIBLE FOR ACQUIRING A VALID NPDES PERMIT. UNLESS SUCH PERMIT IS DETERMINED TO BE NON-APPLICABLE BY REGULATORY AGENCY HAVING PROPER JURISDICTION REGARDING THIS MATTER.

PROJECT LEAD & CIVIL ENGINEERING:

KEITH

301 EAST ATLANTIC BLVD.
POMPANO BEACH, FL 33060
PH: (954) 788-3400

Florida Engineering Business License: CA7928
Florida Surveyor and Mapper Business License: LB6860
Florida Landscape Architecture Business License: LC26000457

LANDSCAPE ARCHITECT:

MKSK

801 INTERNATIONAL PARKWAY
LAKE MARY, FL 32746
407.871.9607
MKSKSTUDIOS.COM

ARCHITECT:

WANNEMACHER JENSEN ARCHITECTS
815 NORTHWEST 57 AVE. SUITE 219
MIAMI, FLORIDA 33126
727-822-5566
WJARC.COM AA0002277

MECHANICAL, PLUMBING, & ELECTRICAL ENGINEERING:

SGM ENGINEERING

5301 WATERFORD DISTRICT DR.
SUITE 750
954-421-1944
SGMENGINEERING.COM CA-00006208

REVISIONS

NO.	DESCRIPTION	DATE
	ISSUED FOR BUILDING PERMIT	11/21/2024
	REVISED FOR BUILDING PERMIT	01/10/2025

ISSUE DATE:	**03/02/2025**
DESIGNED BY:	**BB, NW**
DRAWN BY:	**CD, BB**
CHECKED BY:	**TD**

This item has been digitally signed and sealed by **Thomas F. Donahue**, P.E. on the date adjacent to the seal.

THOMAS F. DONAHUE LICENSE No. 60529 STATE OF FLORIDA PROFESSIONAL ENGINEER

Signature must be verified on any electronic copies.

2026.03.04 08:27:26-05'00'

THOMAS F. DONAHUE, P.E.
FLORIDA REG. NO. 60529
(FOR THE FIRM)

CLIENT

VILLAGE OF PINECREST
PINECREST PARKS & RECREATION

PINECREST PARKS AND RECREATION

PROJECT

GARY MATZNER PARK

SHEET TITLE

EROSION CONTROL PLAN

SHEET NUMBER **CG-101**

KEITH PROJECT NUMBER **13861.00**

STATUS: CONSTRUCTION DOCUMENTS

Plotted by: haiba On 3/3/2026 3:41 PM

Drawing name: K:\13861.00 - Gary Matzner Park Design - Village of Pinecrest\Engineering\Cadd\13861.00-CG-1XX.dwg

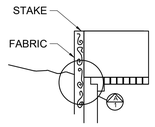

ELEVATION OF STAKE AND FABRIC ORIENTATION

DETAIL A

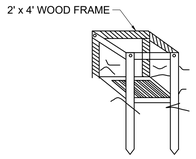

PERSPECTIVE VIEW

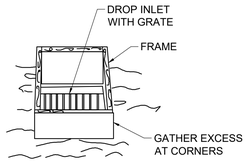

SPECIFIC APPLICATION

THIS METHOD OF INLET PROTECTION IS APPLICABLE WHERE THE INLET DRAINS A RELATIVELY FLAT AREA (SLOPE NO GREATER THAN 5%) WHERE THE INLET SHEET OR OVERLAND FLOWS (NOT EXCEEDING 1 C.F.S.) ARE TYPICAL. THE METHOD SHALL NOT APPLY TO INLETS RECEIVING CONCENTRATED FLOWS, SUCH AS IN STREET OR HIGHWAY MEDIANS

FILTER FABRIC DROP INLET SEDIMENT FILTER

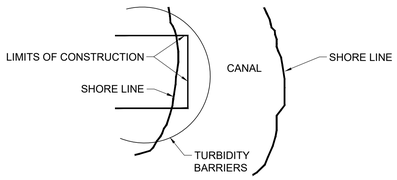

NOTES:
1. TURBIDITY BARRIERS ARE TO BE USED IN ALL PERMANENT WATERBODIES REGARDLESS OF DEPTH.
2. TURBIDITY BARRIERS FOR FLOATING STREAMS AND TIDAL CREEKS MAY BE EITHER FLOATING, OR STAKED TYPES OR ANY COMBINATIONS OF TYPES THAT WILL SUIT SITE CONDITIONS AND MEET EROSION CONTROL AND WATER QUALITY REQUIREMENTS. THE BARRIER TYPE(S) WILL BE AT THE CONTRACTORS OPTION UNLESS OTHERWISE SPECIFIED IN THE PLANS. POSTS IN STAKED TURBIDITY BARRIER TO BE INSTALLED IN VERTICAL POSITION UNLESS OTHERWISE DIRECTED BY THE ENGINEER, CITY AND/OR DRAINAGE DISTRICT.

FLOATING TURBIDITY BARRIERS

EROSION CONTROL GENERAL NOTES

1. SILT FENCE AND TURBIDITY BARRIERS MUST REMAIN IN PLACE AND BE MAINTAINED AT ALL LOCATIONS SHOWN IN THE DRAWING UNTIL CONSTRUCTION ID COMPLETED AND SOILS ARE STABILIZED AND VEGETATION HAS BEEN.
2. CONTRACTOR SHALL SUBMIT SCHEDULE FOR THE INSTALLATION, INSPECTION AND MAINTENANCE THE EROSION CONTROLS FEATURES AS SHOWN IN THE DRAWINGS OR AS DIRECTED BY THE DESIGN ENGINEER. THE SCHEDULE SHALL SPECIFICALLY INDICATE THE SEQUENCE OF CLEARING, EARTH WORK OPERATIONS, AND WHEN THE EROSION CONTROL FEATURE WILL BE INSTALLED, INSPECTED, AND MAINTAINED. IT SHALL ALSO INCLUDE METHODS TO PREVENT POLLUTION OF STREAM, LAKES, TIDAL WATERS, CANALS, AND IMPOUNDMENTS. ESTABLISHED.

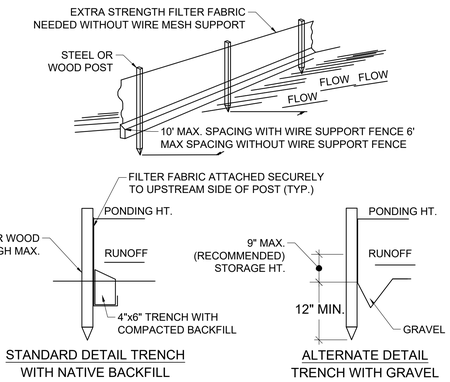

STANDARD DETAIL TRENCH WITH NATIVE BACKFILL

ALTERNATE DETAIL TRENCH WITH GRAVEL

SILT FENCE

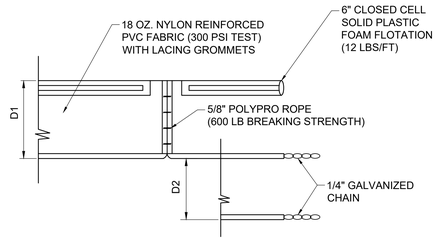

NOTE:
D1 = 5' STD. (SINGLE PANEL FOR DEPTHS 5' OR LESS)
D2 = 5' STD. (ADDITIONAL PANEL FOR DEPTHS > 5')
CURTAIN TO REACH BOTTOM UP TO DEPTHS OF 10'.
TWO (2) PANELS TO BE USED FOR DEPTHS GREATER THAN 10' PER THE FLORIDA STORMWATER, EROSION, AND SEDIMENTATION CONTROL INSPECTOR MANUAL.

FLOATING TURBIDITY BARRIERS TYP. SECTION

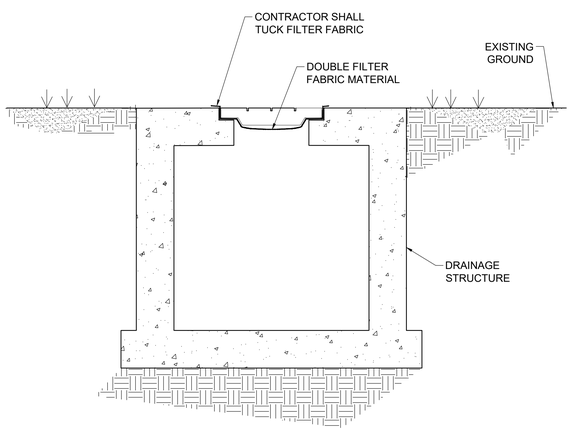

INLET / MANHOLE PROTECTION DETAIL

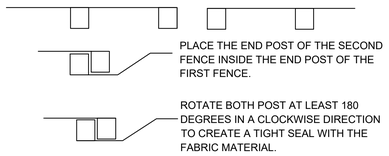

DIRECTION OF RUNOFF WATERS

NOTES:
1. INSPECT AND REPAIR FENCE AFTER EACH STORM EVENT AND REMOVE SEDIMENT WHEN NECESSARY.
2. REMOVED SEDIMENT SHALL BE DEPOSITED TO AN AREA THAT WILL NOT CONTRIBUTE SEDIMENT OFF-SITE AND CAN BE PERMANENTLY STABILIZED.
3. SILT FENCE SHALL BE PLACED ON SLOPE CONTOURS TO MAXIMIZE PONDING EFFICIENCY.

ATTACHING TWO SILT FENCES

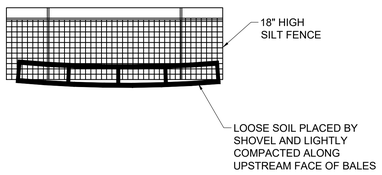

NOTES:
1. DO NOT CONSTRUCT SILT FENCES ACROSS PERMANENT FLOWING COURSES. SILT FENCES ARE TO BE PLACED AT UPLAND LOCATIONS.
2. BALES TO BE STAKED PER THE FLORIDA STORMWATER, EROSION, AND SEDIMENTATION CONTROL INSPECTOR MANUAL.
3. WHERE THE SILT FENCE IS USED AS SLOPE PROTECTION, IT IS TO BE CONSTRUCTED ON 0% LONGITUDINAL GRADE TO AVOID CHANNELIZING RUNOFF ALONG THE LENGTH OF THE FENCE.

BALES BACKED BY SILT FENCE

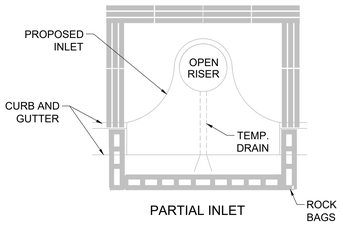

PARTIAL INLET

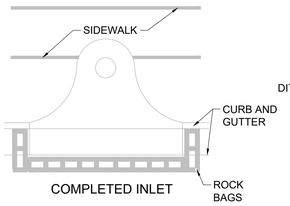

COMPLETED INLET

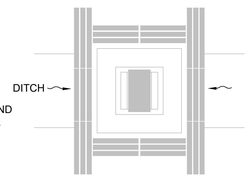

DITCH BOTTOM INLET

NOTE:
1. ANCHOR BALES WITH 2 STAKES PER BALE.
2. WHEN USED IN CONJUNCTION WITH A SILT FENCE, BALES SHALL BE PLACED ON THE UPSTREAM SIDE OF THE FENCE.

DITCH

PROTECTION AROUND INLETS OR SIMILAR STRUCTURES

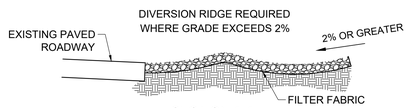

SECTION A-A

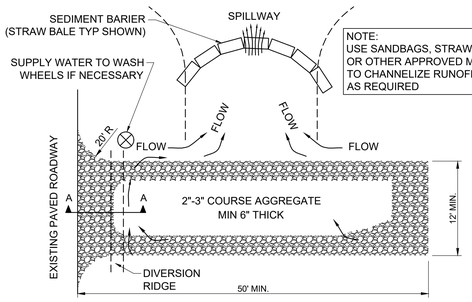

NOTE:
USE SANDBAGS, STRAW BALES, OR OTHER APPROVED METHODS TO CHANNELIZE RUNOFF TO BASIN AS REQUIRED

PLAN

NOTES:
1. THE ENTRANCE SHALL BE MAINTAINED IN A CONDITION THAT WILL PREVENT TRACKING OR FLOWING OF SEDIMENT ONTO PUBLIC RIGHTS-OF-WAY. THIS MAY REQUIRE TOP DRESSING, REPAIR AND/OR CLEANOUT OF ANY MEASURES USED TO TRAP SEDIMENT.
2. WHEN NECESSARY, WHEELS SHALL BE CLEANED PRIOR TO ENTRANCE ONTO PUBLIC RIGHTS-OF-WAY.
3. WHEN WASHING IS REQUIRED, IT SHALL BE DONE ON AN AREA STABILIZED WITH CRUSHED STONE THAT DRAINS INTO AN APPROVED SEDIMENT TRAP OR SEDIMENT BASIN.

TEMPORARY GRAVEL CONSTRUCTION ENTRANCE

PROJECT LEAD & CIVIL ENGINEERING:
KEITH
301 EAST ATLANTIC BLVD.
POMPANO BEACH, FL 33060
PH: (954) 788-3400
Florida Engineering Business License: CA7928
Florida Surveyor and Mapper Business License: LB6860
Florida Landscape Architecture Business License: LC26000457

LANDSCAPE ARCHITECT:
MKSK
801 INTERNATIONAL PARKWAY
LAKE MARY, FL 32746
407.871.9607
MKSKSTUDIOS.COM

ARCHITECT:
WANNEMACHER JENSEN ARCHITECTS
815 NORTHWEST 57 AVE. SUITE 219
MIAMI, FLORIDA 33126
727-822-5566
WJARC.COM AA0002277

MECHANICAL, PLUMBING, & ELECTRICAL ENGINEERING:
SGM ENGINEERING
5301 WATERFORD DISTRICT DR.
SUITE 750
954-421-1944
SGMENGINEERING.COM CA-00006208

REVISIONS

NO.	DESCRIPTION	DATE
	ISSUED FOR BUILDING PERMIT	11/21/2024
	REVISED FOR BUILDING PERMIT	01/10/2025

ISSUE DATE:	03/02/2025
DESIGNED BY:	BB, NW
DRAWN BY:	CD, BB
CHECKED BY:	TD

This item has been digitally signed and sealed by **Thomas F. Donahue**, P.E. on the date adjacent to the seal.
THOMAS F. DONAHUE LICENSE No. 60529 STATE OF FLORIDA PROFESSIONAL ENGINEER
Signature must be verified on any electronic copies.
2026.03.04 08:27:45-05'00'

THOMAS F. DONAHUE, P.E.
FLORIDA REG. NO. 60529
(FOR THE FIRM)

CLIENT
VILLAGE OF PINECREST
PINECREST PARKS & RECREATION

PROJECT
GARY MATZNER PARK

SHEET TITLE
EROSION CONTROL DETAILS

SHEET NUMBER CG-501

KEITH PROJECT NUMBER 13861.00

STATUS: CONSTRUCTION DOCUMENTS

Plotted by: halba On 3/3/2026 3:42 PM

Drawing name: K:\13861.00 - Gary Matzner Park Design - Village of Pinecrest\Engineering\Cadd\13861.00-CG-5XX.dwg

BUILDING DEMOLITION NOTES

1. CONTRACTOR TO DEMOLISH EVERYTHING WITHIN THE LIMITS OF CONSTRUCTION UNLESS OTHERWISE NOTED
2. EXISTING MONITORING WELLS TO REMAIN, CONTRACTOR TO COORDINATE WITH ENVIRONMENTAL ENGINEER PRIOR TO DEMOLITION.
3. BUILDING DEMOLITION IS SUBJECT TO FEDERAL, STATE AND COUNTY RULES RELATING TO THE DEMOLITION AND THE HANDLING OF ASBESTOS CONTAINING MATERIAL. THE COUNTY STATEMENT OF RESPONSIBILITIES REGARDING ASBESTOS MUST BE FILLED OUT AND COMPLIED WITH PRIOR TO ANY BUILDING DEMOLITION.THE CONTRACTOR MUST OBTAIN / PRODUCE THE FOLLOWING PRIOR TO ANY BUILDING DEMOLITION:
   - PEST CONTROL INSPECTION REPORT INDICATING THAT PROPERTY IS FREE OF RODENTS
   - GAS DISCONNECT LETTER FROM GAS SUPPLIER
   - FPL DISCONNECT LETTER FROM FP&L
   - WATER METER REMOVAL LETTER FROM UTILITY PROVIDER
   - FIRE SERVICE WATER METER REMOVAL LETTER FROM UTILITY PROVIDER
   - SEWER CAP OR SEPTIC TANK ABANDONMENT PERMIT REQUIRED WITH A PASSED BUILDING DEPARTMENT INSPECTION PERMIT
   - COPY OF EPA LICENSE AND/OR LETTER FROM LICENSED CONTRACTOR RECOVERING REFRIGERANT FROM A/C UNITS
   - NOTARIZED LETTER FROM DEMOLITION CONTRACTOR STATING FROM WHERE WATER WILL BE OBTAINED FOR DUST CONTROL
   - DEMOLITION CONSTRUCTION DEBRIS MITIGATION PLAN SIGNED AND DATED BY OWNER AND CONTRACTOR
   - BUILDING DEMOLITION DAILY WORK SCHEDULE - LIST OF ALL EQUIPMENT USED FOR DEMOLITION OF BUILDINGS MORE THAN ONE STORY
   - NOTICE OF COMMENCEMENT
   - ALL PORTIONS OF A PARCEL OF LAND SHALL BE PLANTED WITH GROUND COVER OR LAWN OR UTILIZE OTHER APPROVED TEMPORARY EROSION CONTROL MEASURES, IN ORDER TO PREVENT DUST OR SOIL EROSION.

TREE PROTECTION PLAN:

- FOR EXISTING TREES ON SITE, INDICATE THE LOCATION OF TREES/PALMS ON THE SURVEY AND PROVIDE A CORRESPONDING LIST OF TREE NUMBER, BOTANICAL NAME, COMMON NAME, OVERALL HEIGHT, TRUNK DBH FOR TREES, CLEAR TRUNK FOR PALMS, CONDITION %, AND INDICATE THAT ALL EXISTING TREES/PALMS ARE TO BE PROTECTED AND WILL REMAIN ON SITE.
- PROVIDE TREE PROTECTION BARRICADE DETAIL FOR EXISTING TREES ON SITE TO REMAIN. THIS BARRICADE MUST BE INSTALLED PRIOR TO THE BEGINNING OF PROPOSED WORK.
- FOR TREES THAT MUST BE REMOVED TO ACCESS DEMO AREAS, OBTAIN PERMIT FOR TREE REMOVAL.
- KENDALL DRIVE IMPROVEMENTS SHOULD BE INSTALLED (BY OTHERS) PRIOR TO GARY MATZNER PARK WALKWAY ACCESS AT INTERSECTION.

NOTES:

- KENDALL DRIVE IMPROVEMENTS (BY OTHERS) ON SOUTH SIDE OF KENDALL DRIVE BETWEEN LUDLAM ROAD AND SW 65TH CT SHALL BE INSTALLED PRIOR TO GARY MATZNER PARK SIDEWALK ENTRANCE ACCESSES

NOTE:
FUTURE IMPROVEMENTS AT SE CORNER OF N. KENDALL DRIVE AND LUDLAM ROAD INTERSECTION AND AT SW CORNER OF N. KENDALL DRIVE AND SW 65TH CT INTERSECTION (BY OTHERS) ARE PART OF KENDALL DR. MODIFICATIONS/ IMPROVEMENTS PROJECT

NOTES:

- SEE TREE DISPOSITION PLAN FOR TREE REMOVAL/ RELOCATION

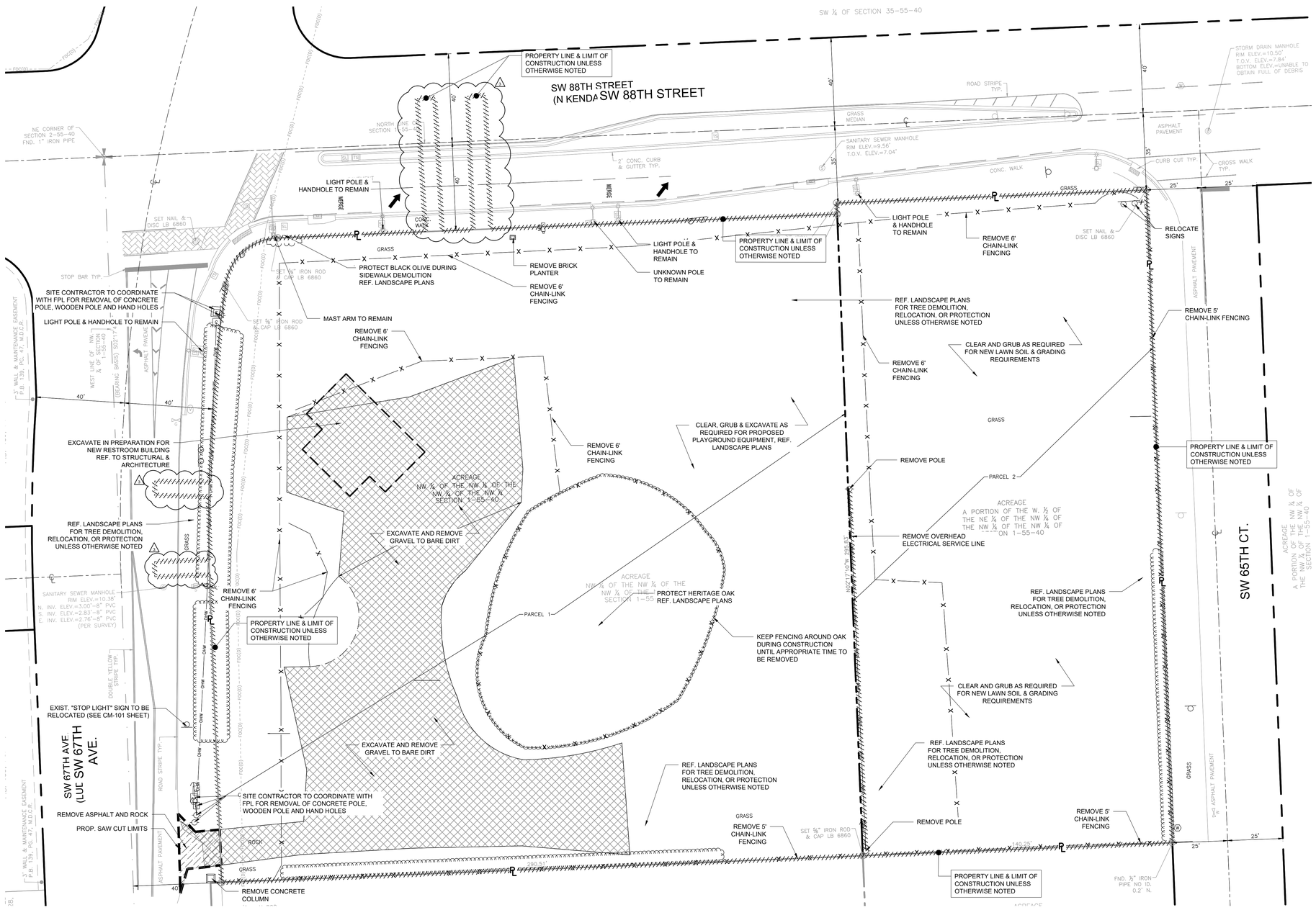

PROJECT LEAD & CIVIL ENGINEERING:

KEITH
301 EAST ATLANTIC BLVD.
POMPANO BEACH, FL 33060
PH: (954) 788-3400
Florida Engineering Business License: CA7928
Florida Surveyor and Mapper Business License: LB6860
Florida Landscape Architecture Business License: LC26000457

LANDSCAPE ARCHITECT:

MKSK
801 INTERNATIONAL PARKWAY
LAKE MARY, FL 32746
407.871.9607
MKSKSTUDIOS.COM

ARCHITECT:

WANNEMACHER JENSEN ARCHITECTS
815 NORTHWEST 57 AVE. SUITE 219
MIAMI, FLORIDA 33126
727-822-5566
WJARC.COM AA0002277

MECHANICAL, PLUMBING, & ELECTRICAL ENGINEERING:

SGM ENGINEERING
5301 WATERFORD DISTRICT DR.
SUITE 750
954-421-1944
SGMENGINEERING.COM CA-00006208

REVISIONS

NO.	DESCRIPTION	DATE
	ISSUED FOR BUILDING PERMIT	11/21/2024
	REVISED FOR BUILDING PERMIT	01/10/2025
1	REVISION 3	03/03/2026

ISSUE DATE:	03/02/2025
DESIGNED BY:	BB, NW
DRAWN BY:	CD, BB
CHECKED BY:	TD

This item has been digitally signed and sealed by **Thomas F. Donahue**, P.E. on the date adjacent to the seal.
THOMAS F. DONAHUE LICENSE No. 60529 STATE OF FLORIDA PROFESSIONAL ENGINEER
Signature must be verified on any electronic copies.
2026.03.04 08:28:03-05'00'
THOMAS F. DONAHUE, P.E. FLORIDA REG. NO. 60529 (FOR THE FIRM)

CLIENT
VILLAGE OF PINECREST
PINECREST PARKS & RECREATION

PROJECT
GARY MATZNER PARK

SHEET TITLE
DEMOLITION PLAN

SHEET NUMBER CD-101

KEITH PROJECT NUMBER 13861.00

STATUS: CONSTRUCTION DOCUMENTS

Drawing name: K:\13861.00 - Gary Matzner Park Design - Village of Pinecrest\Engineering\Cad\13861.00-CD-101.dwg

Plotted by: haiba On 3/3/2026 3:43 PM

NOTE:
CONTRACTOR TO REFER TO TREE DISPOSITION PLAN FOR REFERENCE

NOTE:
ELEVATIONS SHOWN HEREON ARE IN FEET AND BASED ON THE NATIONAL GEODETIC VERTICAL DATUM OF 1929 (NGVD 29). BASED ON THE SURVEY PREPARED BY KEITH AND ASSOCIATES.

NOTE:
FUTURE IMPROVEMENTS AT SE CORNER OF N. KENDALL DRIVE AND LUDLAM ROAD INTERSECTION AND AT SW CORNER OF N. KENDALL DRIVE AND SW 65TH CT INTERSECTION (BY OTHERS) ARE PART OF KENDALL DR. MODIFICATIONS/ IMPROVEMENTS PROJECT

N

GRAPHIC SCALE
0 20 40
SCALE: 1" = 20 '
NOTE: PRINTED DRAWING SIZE MAY HAVE CHANGED FROM ORIGINAL. VERIFY SCALE USING BAR SCALE ABOVE.

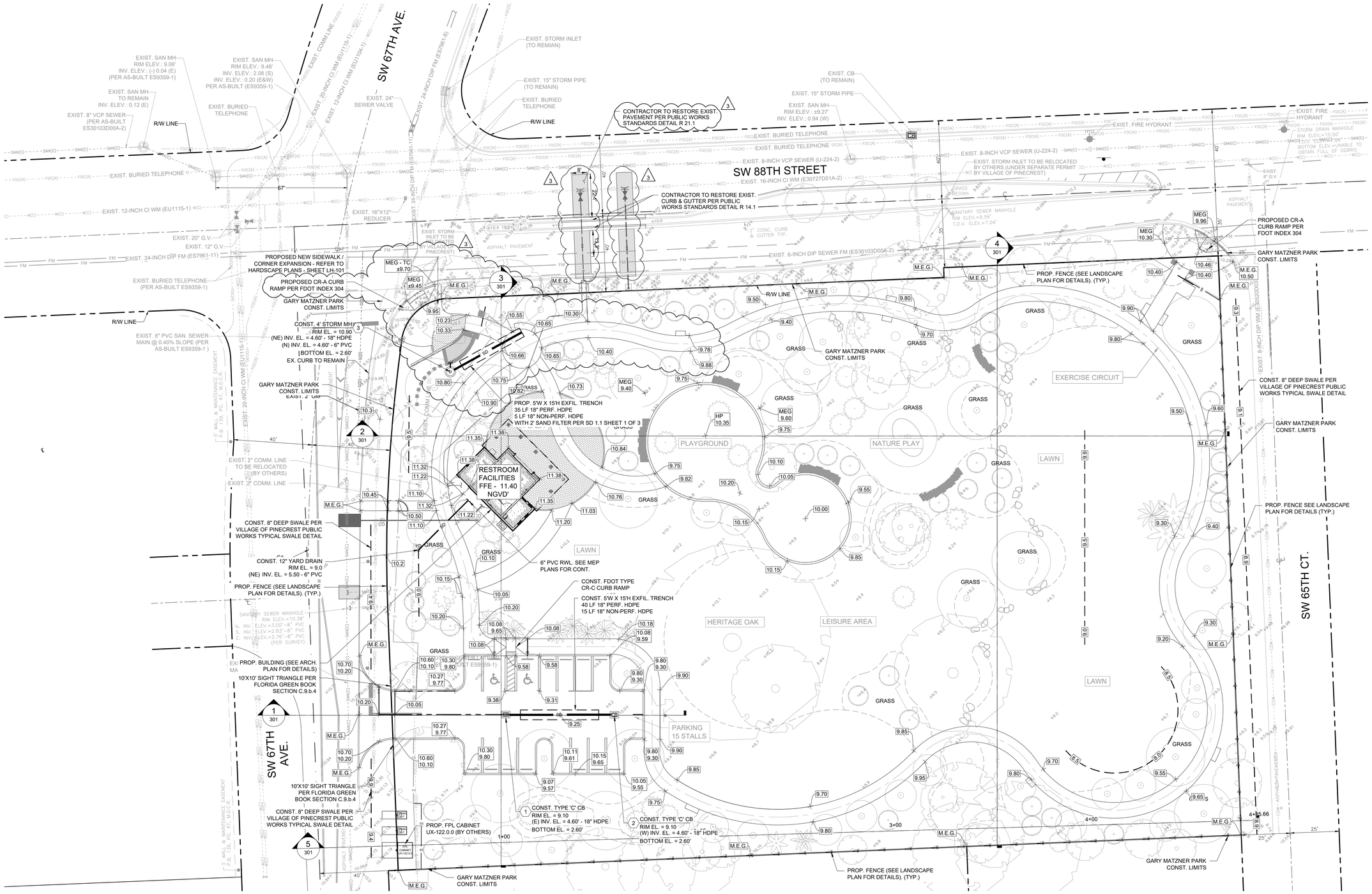

PROJECT LEAD & CIVIL ENGINEERING:

KEITH
301 EAST ATLANTIC BLVD.
POMPANO BEACH, FL 33060
PH: (954) 788-3400
Florida Engineering Business License: CA7928
Florida Surveyor and Mapper Business License: LB6860
Florida Landscape Architecture Business License: LC26000457

LANDSCAPE ARCHITECT:

MKSK
801 INTERNATIONAL PARKWAY
LAKE MARY, FL 32746
407.871.9607
MKSKSTUDIOS.COM

ARCHITECT:

WANNEMACHER JENSEN ARCHITECTS
815 NORTHWEST 57 AVE. SUITE 219
MIAMI, FLORIDA 33126
727-822-5566
WJARC.COM AA0002277

MECHANICAL, PLUMBING, & ELECTRICAL ENGINEERING:

SGM ENGINEERING
5301 WATERFORD DISTRICT DR.
SUITE 750
954-421-1944
SGMENGINEERING.COM CA-00006208

REVISIONS

NO.	DESCRIPTION	DATE
	ISSUED FOR BUILDING PERMIT	11/21/2024
	REVISED FOR BUILDING PERMIT	01/10/2025
	REV. PER WASD & DERM COORD.	06/20/2025
1	REVISION 1	11/26/2025
2	REVISION 2 - RFI # 25	01/08/2026
3	REVISION 3 - PW PERMIT	03/03/2026

ISSUE DATE:	03/02/2025
DESIGNED BY:	BB, NW
DRAWN BY:	CD, BB
CHECKED BY:	TD

This item has been digitally signed and sealed by **Thomas F. Donahue**, P.E. on the date adjacent to the seal.

THOMAS F. DONAHUE LICENSE No. 60529 STATE OF FLORIDA PROFESSIONAL ENGINEER

Signature must be verified on any electronic copies.

2026.03.04 08:28:20-05'00'

THOMAS F. DONAHUE, P.E.
FLORIDA REG. NO. 60529
(FOR THE FIRM)

CLIENT

VILLAGE OF PINECREST
PINECREST PARKS & RECREATION

PROJECT

GARY MATZNER PARK

SHEET TITLE

PAVING, GRADING, AND DRAINAGE PLAN

SHEET NUMBER CP-101

KEITH PROJECT NUMBER 13861.00

STATUS: CONSTRUCTION DOCUMENTS

Drawing name: K:\13861.00 - Gary Matzner Park Design - Village of Pinecrest\Engineering\Cad\13861.00-CP-101X.dwg

Plotted by: cphillips On 3/3/2026 9:11 PM

NOTE:
CONTRACTOR TO REFER TO TREE DISPOSITION PLAN FOR REFERENCE

NOTE:
ELEVATIONS SHOWN HEREON ARE IN FEET AND BASED ON THE NATIONAL GEODETIC VERTICAL DATUM OF 1929 (NGVD 29). BASED ON THE SURVEY PREPARED BY KEITH AND ASSOCIATES.

NOTE:
FUTURE IMPROVEMENTS AT SE CORNER OF N. KENDALL DRIVE AND LUDLAM ROAD INTERSECTION AND AT SW CORNER OF N. KENDALL DRIVE AND SW 65TH CT INTERSECTION (BY OTHERS) ARE PART OF KENDALL DR. MODIFICATIONS/ IMPROVEMENTS PROJECT

N

GRAPHIC SCALE
0 10 20
SCALE: 1" = 10 '
NOTE: PRINTED DRAWING SIZE MAY HAVE CHANGED FROM ORIGINAL. VERIFY SCALE USING BAR SCALE ABOVE.

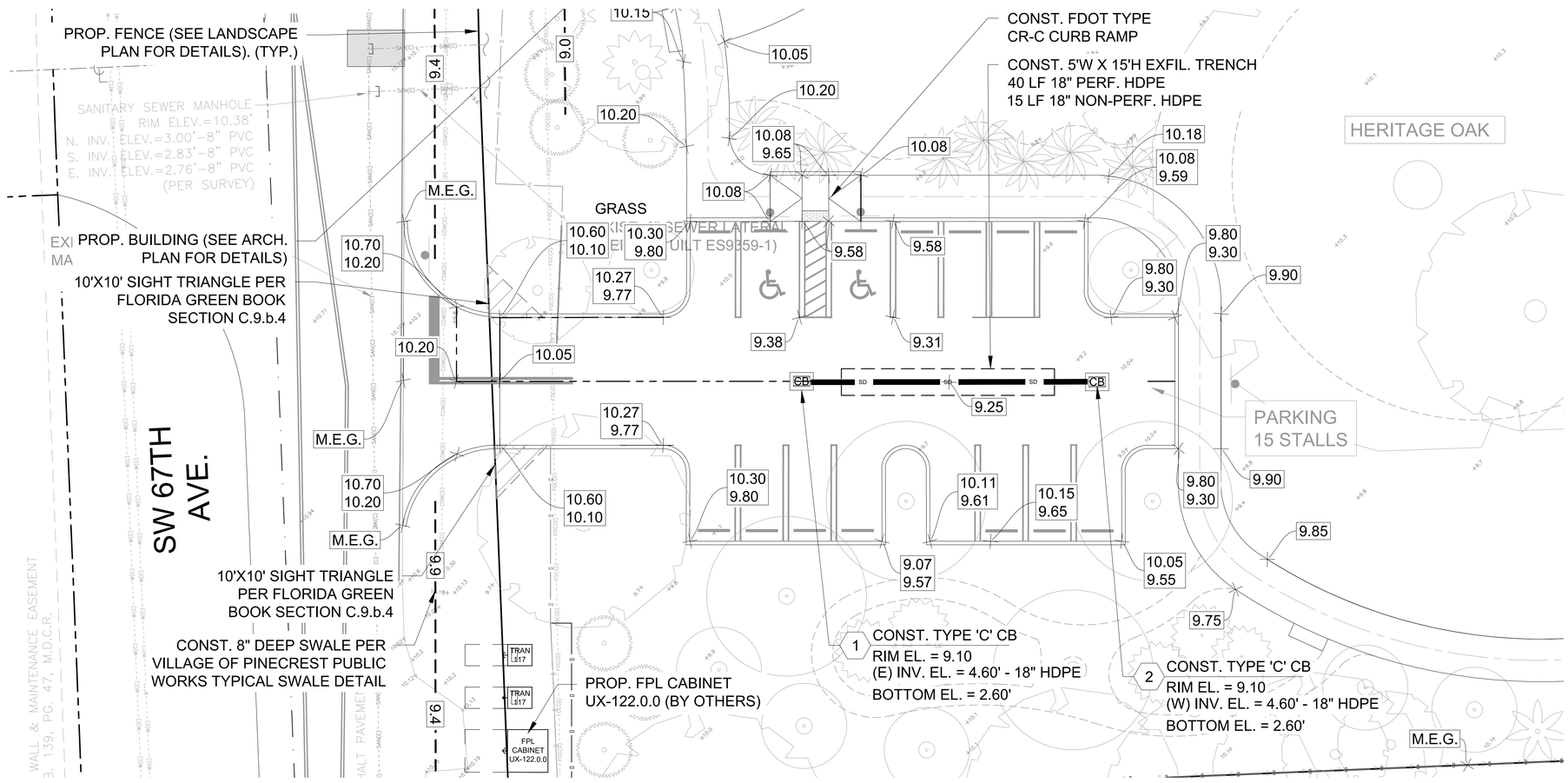

HORIZONTAL SCALE 1" = 10'
VERTICAL SCALE 1" = 2'

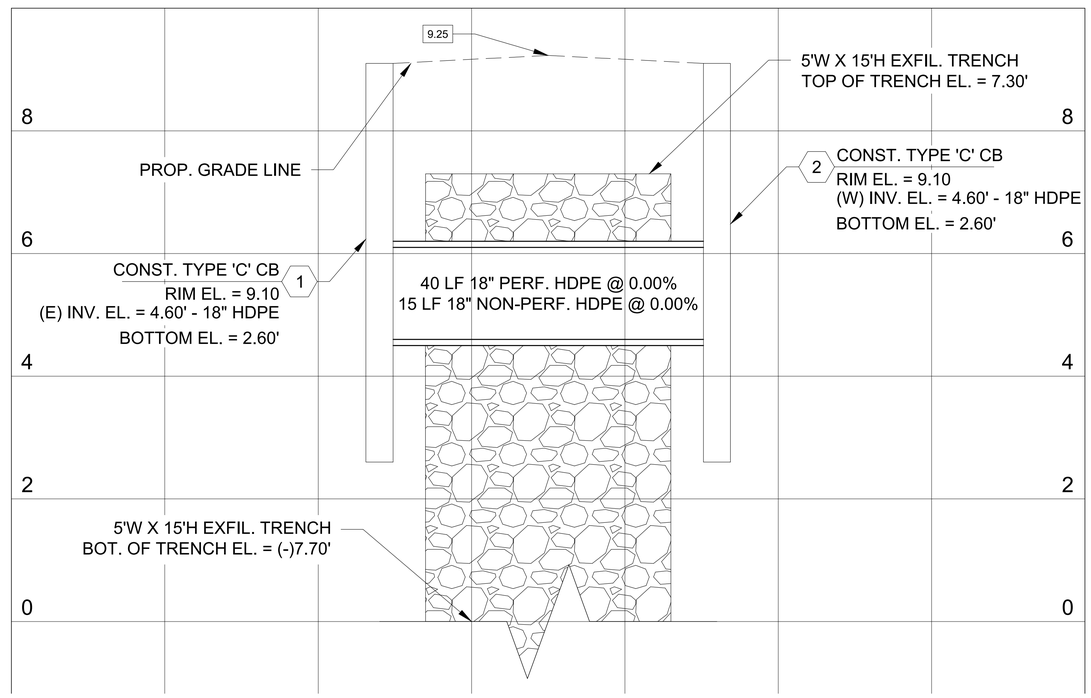

PROJECT LEAD & CIVIL ENGINEERING:
KEITH
301 EAST ATLANTIC BLVD.
POMPANO BEACH, FL 33060
PH: (954) 788-3400
Florida Engineering Business License: CA7928
Florida Surveyor and Mapper Business License: LB6860
Florida Landscape Architecture Business License: LC26000457

LANDSCAPE ARCHITECT:
MKSK
801 INTERNATIONAL PARKWAY
LAKE MARY, FL 32746
407.871.9607
MKSKSTUDIOS.COM

ARCHITECT:
WANNEMACHER JENSEN ARCHITECTS
815 NORTHWEST 57 AVE. SUITE 219
MIAMI, FLORIDA 33126
727-822-5566
WJARC.COM AA0002277

MECHANICAL, PLUMBING, & ELECTRICAL ENGINEERING:
SGM ENGINEERING
5301 WATERFORD DISTRICT DR.
SUITE 750
954-421-1944
SGMENGINEERING.COM CA-00006208

REVISIONS

NO.	DESCRIPTION	DATE
	ISSUED FOR BUILDING PERMIT	11/21/2024
	REVISED FOR BUILDING PERMIT	01/10/2025

ISSUE DATE:	03/02/2025
DESIGNED BY:	BB, NW
DRAWN BY:	CD, BB
CHECKED BY:	TD

This item has been digitally signed and sealed by **Thomas F. Donahue**, P.E. on the date adjacent to the seal.
Signature must be verified on any electronic copies.
THOMAS F. DONAHUE LICENSE No. 60529 STATE OF FLORIDA PROFESSIONAL ENGINEER
2026.03.04 08:28:36-05'00'
THOMAS F. DONAHUE, P.E.
FLORIDA REG. NO. 60529
(FOR THE FIRM)

CLIENT
VILLAGE OF PINECREST
PINECREST PARKS & RECREATION

PROJECT
GARY MATZNER PARK

SHEET TITLE
PAVING, GRADING, AND DRAINAGE PROFILES

SHEET NUMBER **CP-201**

KEITH PROJECT NUMBER **13861.00**

STATUS: CONSTRUCTION DOCUMENTS

Plotted by: hallsa On 3/3/2026 3:45 PM

Drawing name: K:\13861.00 - Gary Matzner Park Design - Village of Pinecrest\Engineering\Cadd\13861.00-CP-1XX.dwg

NOTE:
ELEVATIONS SHOWN HEREON ARE IN FEET AND BASED ON THE NATIONAL GEODETIC VERTICAL DATUM OF 1929 (NGVD 29). BASED ON THE SURVEY PREPARED BY KEITH AND ASSOCIATES.

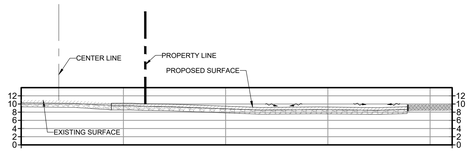

SECTION 1
HORIZONTAL SCALE: 1"=30'
VERTICAL SCALE: 1"=15'

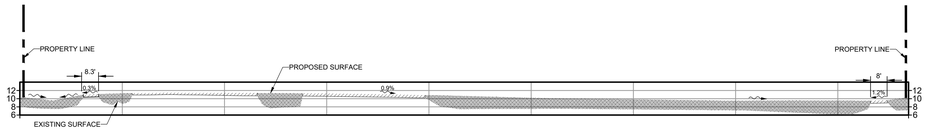

SECTION 2
HORIZONTAL SCALE: 1"=30'
VERTICAL SCALE: 1"=15'

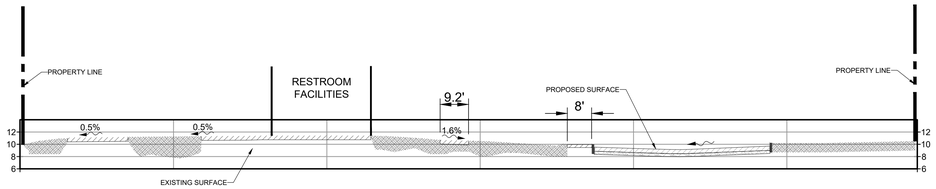

SCETION 3
HORIZONTAL SCALE: 1"=30'
VERTICAL SCALE: 1"=15'

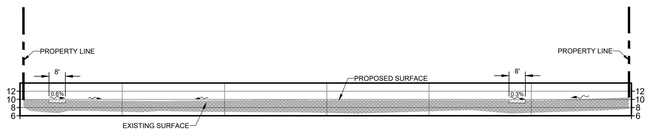

SECTION 4
HORIZONTAL SCALE: 1"=30'
VERTICAL SCALE: 1"=15'

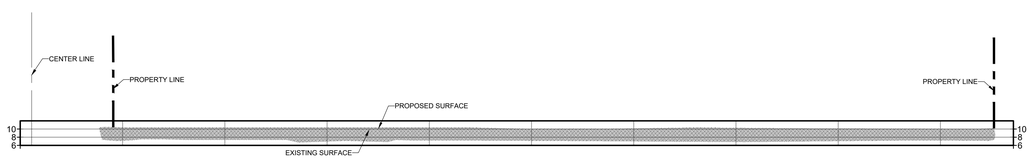

SECTION 5
HORIZONTAL SCALE: 1"=30'
VERTICAL SCALE: 1"=15'

PROJECT LEAD & CIVIL ENGINEERING:

KEITH
301 EAST ATLANTIC BLVD.
POMPANO BEACH, FL 33060
PH: (954) 788-3400
Florida Engineering Business License: CA7928
Florida Surveyor and Mapper Business License: LB6860
Florida Landscape Architecture Business License: LC26000457

LANDSCAPE ARCHITECT:

MKSK
801 INTERNATIONAL PARKWAY
LAKE MARY, FL 32746
407.871.9607
MKSKSTUDIOS.COM

ARCHITECT:

WANNEMACHER JENSEN ARCHITECTS
815 NORTHWEST 57 AVE. SUITE 219
MIAMI, FLORIDA 33126
727-822-5566
WJARC.COM AA0002277

MECHANICAL, PLUMBING, & ELECTRICAL ENGINEERING:

SGM ENGINEERING
5301 WATERFORD DISTRICT DR.
SUITE 750
954-421-1944
SGMENGINEERING.COM CA-00006208

REVISIONS

NO.	DESCRIPTION	DATE
	ISSUED FOR BUILDING PERMIT	11/21/2024
	REVISED FOR BUILDING PERMIT	01/10/2025

ISSUE DATE:	03/02/2025
DESIGNED BY:	BB, NW
DRAWN BY:	CD, BB
CHECKED BY:	TD

This item has been digitally signed and sealed by **Thomas F. Donahue**, P.E. on the date adjacent to the seal.

THOMAS F. DONAHUE LICENSE No. 60529 STATE OF FLORIDA PROFESSIONAL ENGINEER

Signature must be verified on any electronic copies.

2026.03.04 08:28:52-05'00'
THOMAS F. DONAHUE, P.E.
FLORIDA REG. NO. 60529
(FOR THE FIRM)

CLIENT
VILLAGE OF PINECREST
PINECREST PARKS & RECREATION

PROJECT
GARY MATZNER PARK

SHEET TITLE
PAVING AND GRADING SECTIONS

SHEET NUMBER CP-301

KEITH PROJECT NUMBER 13861.00

STATUS: CONSTRUCTION DOCUMENTS

Plotted by: haiba On 3/3/2026 3:46 PM

Drawing name: K:\13861.00 - Gary Matzner Park Design - Village of Pinecrest\Engineering\Cad\13861.00-CP-XXX.dwg

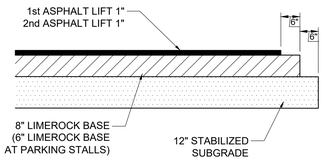

ASPHALTIC CONCRETE VEHICULAR:
FIRST LIFT - 1" FDOT - SP 9.5 (FINE MIX). SECOND (FINAL) LIFT - 1" FDOT - SP 9.5 (FINE MIX). ASPHALT SURFACE COURSE SHALL CONFORM TO THE REQUIREMENTS OF FDOT STANDARDS SPECIFICATIONS SECTIONS 330 AND 334. SECOND LIFT OF ASPHALT SHALL NOT BE PLACED UNTIL FINAL LANDSCAPE/HARDSCAPE HAS BEEN INSTALLED.

PRIME AND TACK COAT:
LIMEROCK BASE COURSE SHALL CONFORM TO THE REQUIREMENTS OF FDOT STANDARDS SPECIFICATIONS SECTION 300.
APPLICATION RATES:
PRIME COAT - 0.10 GALLONS PER SQ. YD.
TACK COAT - 0.08 GALLONS PER SQ. YD.

BASE:
8"/ 6" LIMEROCK BASE COMPACTED TO 98% OF MAXIMUM DENSITY (AASHTO T-180), LIMEROCK BASE TO CONFORM WITH THE REQUIREMENTS OF FDOT SPECIFICATIONS SECTIONS 200 AND 911.

SUBGRADE:
12" STABILIZED SUBGRADE COMPACTED TO 98% OF MAXIMUM DENSITY (AASHTO T-180); MINIMUM LBR = 40.

1 ASPHALT PAVEMENT DETAIL

NOT TO SCALE

NOTE:
ALL TYPE "D" CURB SHALL BE IN ACCORDANCE WITH THE STANDARD REQUIREMENTS OF FDOT INDEX 520-001.

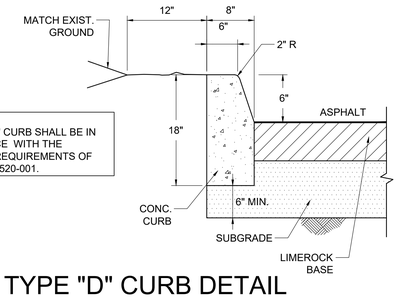

2 TYPE "D" CURB DETAIL PER FDOT INDEX No. 520-001

NOT TO SCALE

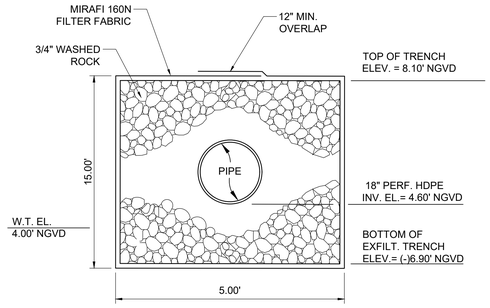

3 EXFILTRATION TRENCH DETAIL

NOT TO SCALE

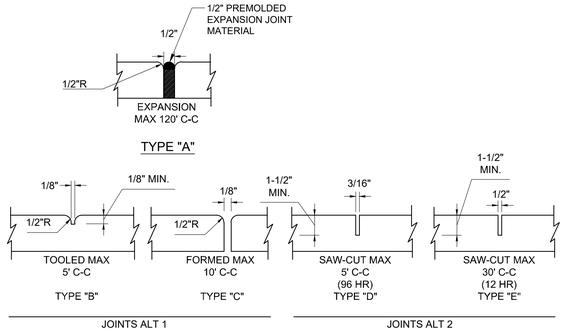

CONCRETE PAVEMENT & SIDEWALK JOINTS

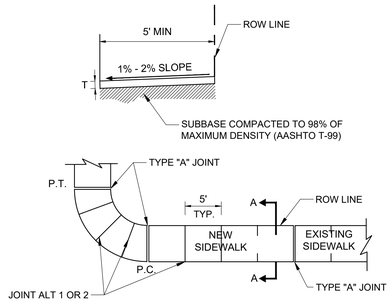

SIDEWALK PLAN

NOTES:
1. Sidewalk construction is to comply with the latest FDOT standards for sidewalks and ADA curb ramps, per FDOT index 522-001 and 522-002.
2. Provide either joint alternate 1 or 2. If using joint alternate 2: construct type "E" joints at not more than 30' intervals - within 12 hours after finishing, construct 1/2" expansion, provide joint type "A", with non-rising performed joint filler at not more than 120' intervals, construct remaining joints within 96 hours after finishing.
3. Provide 1/2" expansion joint type "A", with non-rising performed joint filler where concrete pavement abuts concrete curbs, driveways and other fixed objects.
4. Sidewalk thickness shall be 4" thick unless otherwise noted. Thickness shall be 6" through driveways and on all commercial sidewalk applications.
5. The use of steel reinforcement is not permitted.
6. Concrete to be 3,000 psi in 28 days.
7. Cure all concrete with approved method.
8. Sidewalk foundation shall be compacted to a firm, even surface, true to grade and cross section, and shall be moist at the time concrete is placed.
9. All construction shall conform to local construction codes and standards.
10. Sidewalk slopes shall meet the requirements of the Americans with Disabilities Act. Minimum transverse slope 0.01 ft./ft. And maximum transverse slope 0.02 ft./ft. toward swale or gutter. Longitudinal slope shall conform to ADA requirements.
11. The vertical deviation for a new sidewalk shall not be more than ½".
12. The vertical deviation for a new maintenance access structure cover shall not be more than ¼".
13. Where truncated domes are used, stamped concrete is not permitted. Truncated domes to be cast with the concrete.
14. Sidewalk shall have a transverse hair broom finish.

4 SIDEWALK DETAIL

NOT TO SCALE

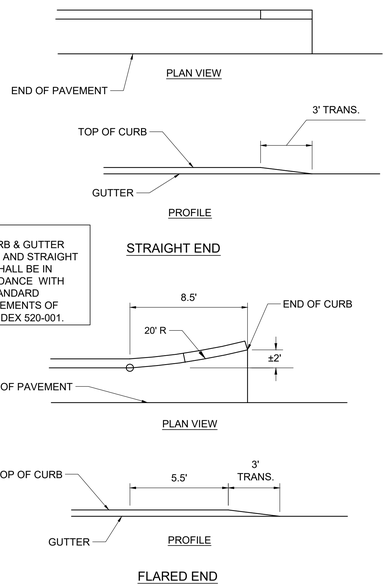

NOTE:
ALL CURB & GUTTER FLARED AND STRAIGHT ENDS SHALL BE IN ACCORDANCE WITH THE STANDARD REQUIREMENTS OF FDOT INDEX 520-001.

5 CURB & GUTTER FLARED AND STRAIGHT ENDS

NOT TO SCALE

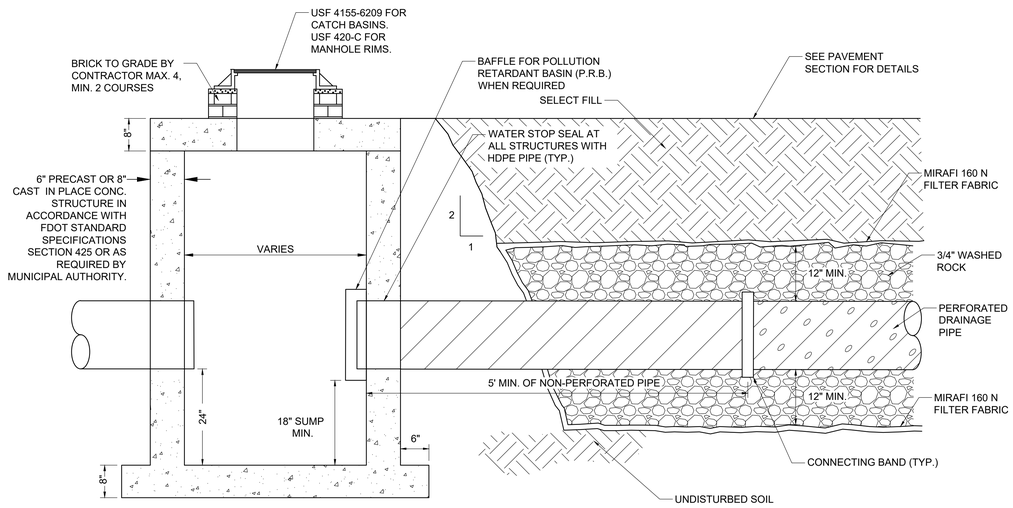

6 CATCH BASIN W/ PRB AND EXFILTRATION TRENCH

NOT TO SCALE

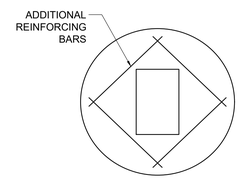

PLAN VIEW
TOP SLAB
FOR CATCH BASINS

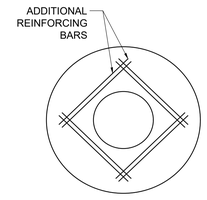

PLAN VIEW
TOP SLAB
FOR MANHOLES

7 CATCH BASIN / MANHOLE FRAME DETAIL

NOT TO SCALE

PROJECT LEAD
& CIVIL ENGINEERING:
KEITH
301 EAST ATLANTIC BLVD.
POMPANO BEACH, FL 33060
PH: (954) 788-3400
Florida Engineering Business License: CA7928
Florida Surveyor and Mapper Business License: LB6860
Florida Landscape Architecture Business License: LC26000457

LANDSCAPE ARCHITECT:
MKSK
801 INTERNATIONAL PARKWAY
LAKE MARY, FL 32746
407.871.9607
MKSKSTUDIOS.COM

ARCHITECT:
WANNEMACHER JENSEN ARCHITECTS
815 NORTHWEST 57 AVE. SUITE 219
MIAMI, FLORIDA 33126
727-822-5566
WJARC.COM AA0002277

MECHANICAL, PLUMBING,
& ELECTRICAL ENGINEERING:
SGM ENGINEERING
5301 WATERFORD DISTRICT DR.
SUITE 750
954-421-1944
SGMENGINEERING.COM CA-00006208

REVISIONS

NO.	DESCRIPTION	DATE
	ISSUED FOR BUILDING PERMIT	11/21/2024
	REVISED FOR BUILDING PERMIT	01/10/2025

ISSUE DATE:	03/02/2025
DESIGNED BY:	BB, NW
DRAWN BY:	CD, BB
CHECKED BY:	TD

This item has been digitally signed and sealed by **Thomas F. Donahue**, P.E. on the date adjacent to the seal.
THOMAS F. DONAHUE LICENSE No. 60529 STATE OF FLORIDA PROFESSIONAL ENGINEER
Signature must be verified on any electronic copies.
2026.03.04 08:29:14-05'00'
THOMAS F. DONAHUE, P.E.
FLORIDA REG. NO. 60529
(FOR THE FIRM)

CLIENT
VILLAGE OF PINECREST
PINECREST PARKS & RECREATION

PROJECT
GARY MATZNER PARK

SHEET TITLE
PAVING, GRADING, AND DRAINAGE DETAILS

SHEET NUMBER
CP-501

KEITH PROJECT NUMBER
13861.00

STATUS: CONSTRUCTION DOCUMENTS

Plotted by: haiba On 3/3/2026 3:47 PM

Drawing name: K:\13861.00 - Gary Matzner Park Design - Village of Pinecrest\Engineering\Cad\13861.00-CP-SXX.dwg

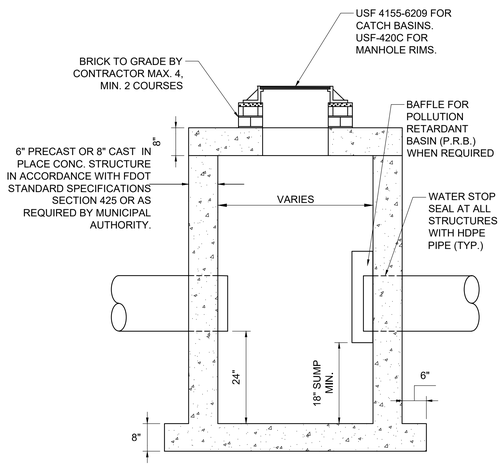

NOTES:
1. STRUCTURE MANUFACTURER AND/OR CONTRACTOR SHALL CONFIRM ALL STEEL REINFORCEMENT MEETS FDOT STANDARDS PER INDEX 425-010, SECTION 415 AND 425 PRIOR TO SUBMITTING ANY SHOP DRAWINGS FOR APPROVAL.
2. LOCKING GRATES TO BE PROVIDED.

CATCH BASIN / DRAINAGE MANHOLE DETAIL

8

NOT TO SCALE

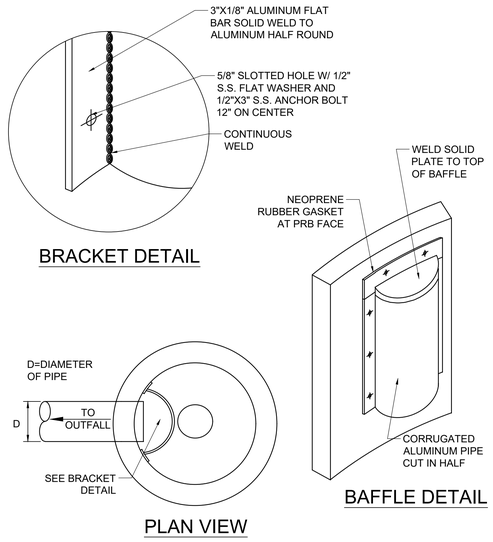

NOTE:
BAFFLE TO BE A SECTION OF CAP CUT IN HALF. CAP FOR BAFFLE SHALL BE THE NEXT STANDARD PIPE DIAMETER LARGER THAN THE INFLOW/ OUTFLOW PIPE.

POLLUTION RETARDANT BAFFLE DETAIL

9

NOT TO SCALE

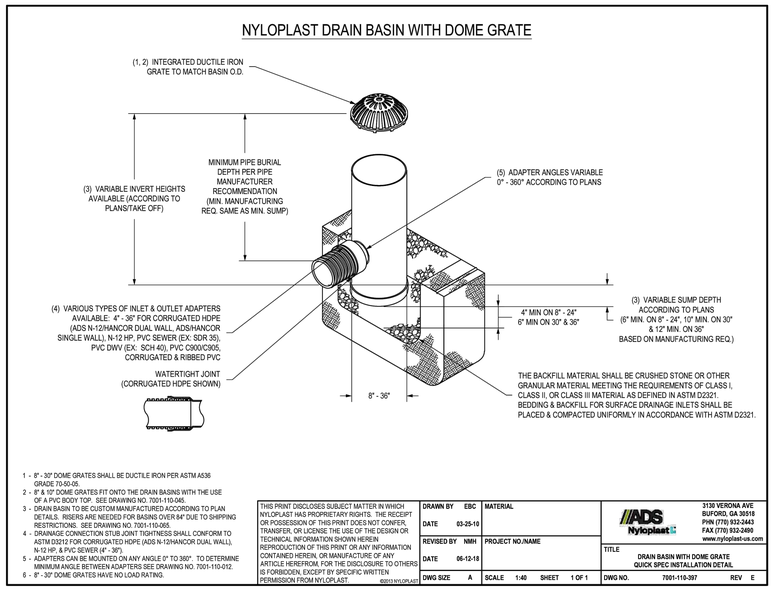

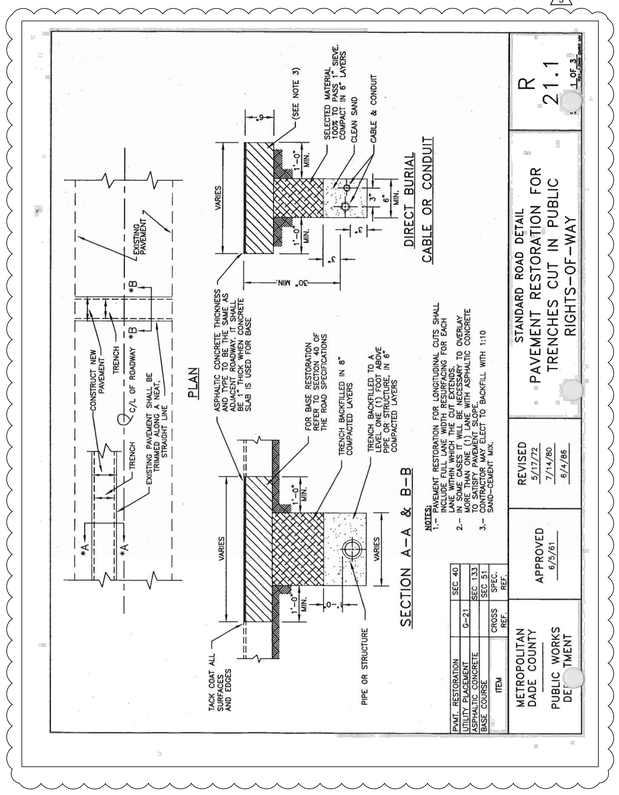

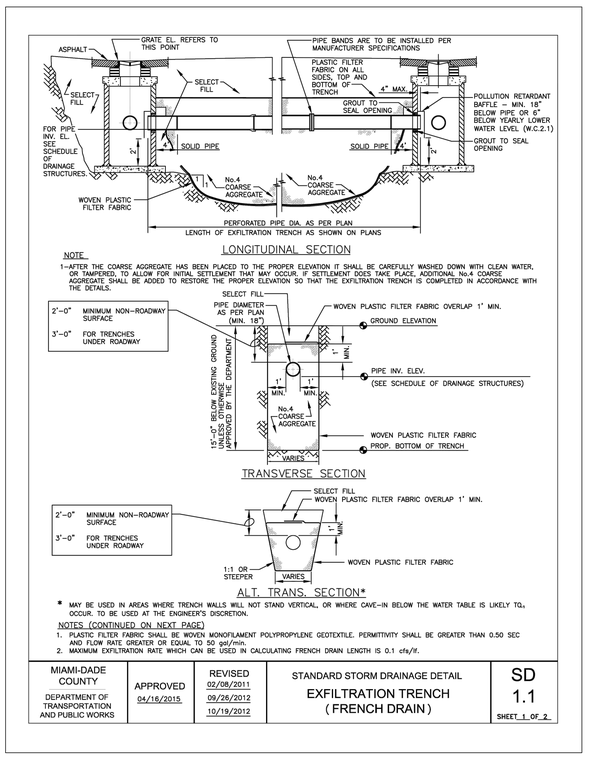

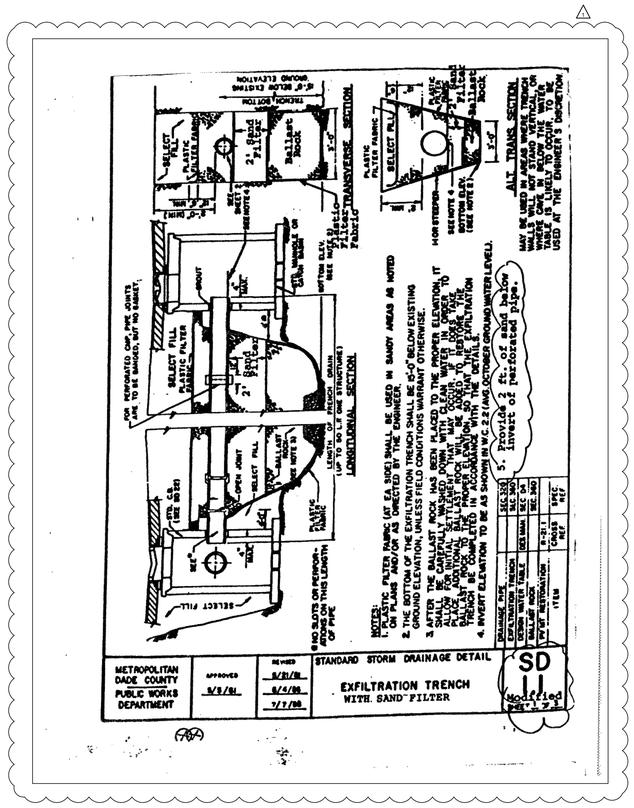

PROJECT LEAD & CIVIL ENGINEERING:

KEITH
301 EAST ATLANTIC BLVD.
POMPANO BEACH, FL 33060
PH: (954) 788-3400
Florida Engineering Business License: CA7928
Florida Surveyor and Mapper Business License: LB6860
Florida Landscape Architecture Business License: LC26000457

LANDSCAPE ARCHITECT:

MKSK
801 INTERNATIONAL PARKWAY
LAKE MARY, FL 32746
407.871.9607
MKSKSTUDIOS.COM

ARCHITECT:

WANNEMACHER JENSEN ARCHITECTS
815 NORTHWEST 57 AVE. SUITE 219
MIAMI, FLORIDA 33126
727-822-5566
WJARC.COM AA0002277

MECHANICAL, PLUMBING, & ELECTRICAL ENGINEERING:

SGM ENGINEERING
5301 WATERFORD DISTRICT DR.
SUITE 750
954-421-1944
SGMENGINEERING.COM CA-00006208

REVISIONS

NO.	DESCRIPTION	DATE
	ISSUED FOR BUILDING PERMIT	11/21/2024
	REVISED FOR BUILDING PERMIT	01/10/2025
1	REVISION 1	11/26/2025
2	REVISION 2 - RFI # 25	01/08/2026
3	REVISION 2 - PW PERMIT	03/03/2026

ISSUE DATE:	03/02/2025
DESIGNED BY:	BB, NW
DRAWN BY:	CD, BB
CHECKED BY:	TD

This item has been digitally signed and sealed by **Thomas F. Donahue**, P.E. on the date adjacent to the seal.
Signature must be verified on any electronic copies.
THOMAS F. DONAHUE LICENSE No. 60529 STATE OF FLORIDA PROFESSIONAL ENGINEER
2026.03.04 08:39:15 -05'00'
THOMAS F. DONAHUE, P.E.
FLORIDA REG. NO. 60529
(FOR THE FIRM)

CLIENT
VILLAGE OF PINECREST
PINECREST PARKS & RECREATION

PROJECT
GARY MATZNER PARK

SHEET TITLE
PAVING, GRADING, AND DRAINAGE DETAILS

SHEET NUMBER **CP-502**

KEITH PROJECT NUMBER **13861.00**

Plotted by: cphillips On 3/3/2026 9:16 PM

Drawing name: K13861.00 - Gary Matzner Park Design - Village of Pinecrest\Engineering\Cadd\13861.00-CP-XXX.dwg

STATUS: CONSTRUCTION DOCUMENTS

B — PROPOSED 6" PVC SS LATERAL OVER
EXIST. TWO (2) 2" COMMUNICATION CONDUITS
B.O.P.= 2.97' (FIELD VERIFY)
T.O.P.= (-)1.77' (FIELD VERIFY)
CLEARANCE= 4.74'

C — PROPOSED 6" PVC STORMWATER PIPE OVER
PROPOSED 6" PVC SS LATERAL
B.O.P.= 5.50' (FIELD VERIFY)
T.O.P.= 3.90' (FIELD VERIFY)
CLEARANCE= 1.60'

D — PROPOSED 4" DIP DOMESTIC WATER LINE OVER
EXIST. 6" DIP SEWER FORCE MAIN
B.O.P.= 5.91' (FIELD VERIFY)
T.O.P.= 4.91' (FIELD VERIFY)
CLEARANCE= 1.00' (MIN.)

F — PROPOSED 6" DIP FIRE LINE OVER
EXIST. 6" DIP SEWER FORCE MAIN
B.O.P.= 5.91' (FIELD VERIFY)
T.O.P.= 4.91' (FIELD VERIFY)
CLEARANCE= 1.00' (MIN.)

NOTE (NOT PART OF MDWASD NOTES NOR APPROVAL):
1. CONTRACTOR TO RESTORE/CONSTRUCT EXIST. PAVEMENT, SIDEWALK, PAVEMENT MARKINGS OR OTHER SURFACE TREATMENT DISTURBED DURING INSTALLATION OF NEW WATER SERVICE, SANITARY SEWER SERVICE AND OTHER CONSTRUCTION ACTIVITIES.
2. CONTRACTOR SHALL VERIFY LOCATION AND SIZE OF EXISTING UTILITIES AND ADJUST AS NEEDED (TYP.). CONTRACTOR SHALL PROVIDE CROSSING INFORMATION INCLUDING FINISH GRADE (FG), BOTTOM OF PIPE (BOP), TOP OF PIPE (TOP) AND CLEARANCE (TYP.).
3. IT IS THE CONTRACTOR'S RESPONSIBILITY TO PROCESS ANY REQUIRED DEWATERING PERMIT(S) THROUGH THE APPROPRIATE JURISDICTIONAL AGENCIES FOR ANY DEWATERING ACTIVITIES THAT ARE ANTICIPATED DURING CONSTRUCTION. FOR ANY ON-SITE AND/OR OFF-SITE DEWATERING ACTIVITIES NO MATTER THE VOLUME OF WATER. THE CONTRACTOR WILL BE REQUIRED TO PROVIDE COPIES OF THESE PERMIT TO MIAMI DADE COUNTY/ VILLAGE OF PINECREST, AND/OR ENGINEER PRIOR TO PROCEEDING WITH ANY DEWATERING ACTIVITIES AND ABIDE TO AL SPECIAL CONDITIONS IDENTIFIED IN SUCH PERMIT.
4. LOCATION AND SIZE OF ALL EXISTING UTILITIES AND TOPOGRAPHY (FACILITIES) AS SHOW ON CONSTRUCTION DRAWINGS ARE DRAWN FROM AVAILABLE RECORDS. THE ENGINEER ASSUMES NO RESPONSIBILITY TO DETERMINE THE EXACT LOCATION (VERTICAL & HORIZONTAL) OF ANY EXISTING UTILITIES AND TOPOGRAPHY PRIOR TO CONSTRUCTION. THE CONTRACTOR SHALL VERIFY THE ELEVATIONS AND LOCATIONS OF ALL EXISTING FACILITIES, IN COORDINATION WITH ALL UTILITY COMPANIES, PRIOR TO BEGINNING ANY CONSTRUCTION. THE CONTRACTOR SHALL IMMEDIATELY NOTIFY THE ENGINEER SO THAT APPROPRIATE MEASURES CAN BE TAKEN TO RESOLVE ANY UTILITIES CONFLICT.

NOTE:
ELEVATIONS SHOWN HEREON ARE IN FEET AND BASED ON THE NORTH GEODETIC VERTICAL DATUM OF 1929 (NGVD 1929). BASED ON THE SURVEY PREPARED BY KEITH & ASSOCIATES.

N

GRAPHIC SCALE
0 20 40
SCALE: 1" = 20 '
NOTE: PRINTED DRAWING SIZE MAY HAVE CHANGED FROM ORIGINAL. VERIFY SCALE USING BAR SCALE ABOVE.

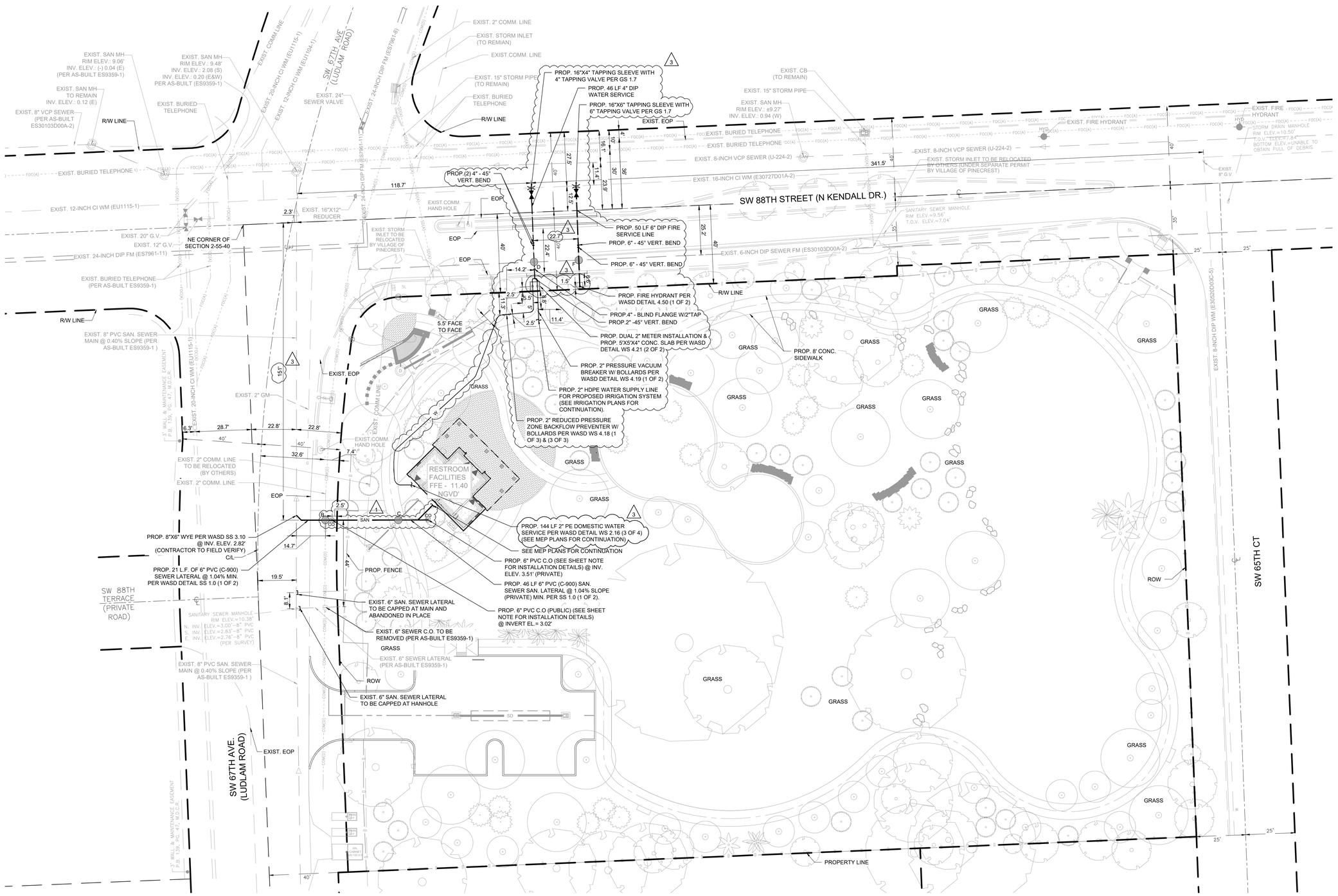

PROJECT LEAD & CIVIL ENGINEERING:
KEITH
301 EAST ATLANTIC BLVD.
POMPANO BEACH, FL 33060
PH: (954) 788-3400
Florida Engineering Business License: CA7928
Florida Surveyor and Mapper Business License: LB6860
Florida Landscape Architecture Business License: LC26000457

LANDSCAPE ARCHITECT:
MKSK
801 INTERNATIONAL PARKWAY
LAKE MARY, FL 32746
407.871.9607
MKSKSTUDIOS.COM

ARCHITECT:
WANNEMACHER JENSEN ARCHITECTS
815 NORTHWEST 57 AVE. SUITE 219
MIAMI, FLORIDA 33126
727-822-5566
WJARC.COM AA0002277

MECHANICAL, PLUMBING, & ELECTRICAL ENGINEERING:
SGM ENGINEERING
5301 WATERFORD DISTRICT DR.
SUITE 750
954-421-1944
SGMENGINEERING.COM CA-00006208

REVISIONS

NO.	DESCRIPTION	DATE
	ISSUED FOR BUILDING PERMIT	11/21/2024
	REVISED FOR BUILDING PERMIT	01/10/2025
1	REVISION 1	11/26/2025
2	REVISION 2 - RFI # 25	01/08/2026
3	REVISION 3 - PW PERMIT	03/03/2026

ISSUE DATE:	03/02/2025
DESIGNED BY:	BB, NW
DRAWN BY:	CD, BB
CHECKED BY:	TD

This item has been digitally signed and sealed by **Thomas F. Donahue, P.E.** on the date adjacent to the seal.
THOMAS F. DONAHUE LICENSE No. 60529 STATE OF FLORIDA PROFESSIONAL ENGINEER
Signature must be verified on any electronic copies.
2026.03.04 08:29:52-05'00'
THOMAS F. DONAHUE, P.E.
FLORIDA REG. NO. 60529
(FOR THE FIRM)

CLIENT
VILLAGE OF PINECREST
PINECREST PARKS & RECREATION

PROJECT
GARY MATZNER PARK

SHEET TITLE
WATER AND SEWER PLAN

SHEET NUMBER
CU-101

KEITH PROJECT NUMBER
13861.00

STATUS: CONSTRUCTION DOCUMENTS

Plotted by: cphillips On 3/3/2026 9:14 PM
Drawing name: K:\13861.00 - Gary Matzner Park Design - Village of Pinecrest\Engineering\Cadd\13861.00-CU-1XX.dwg

MDWASD AGREEMENT ID No.: 32990

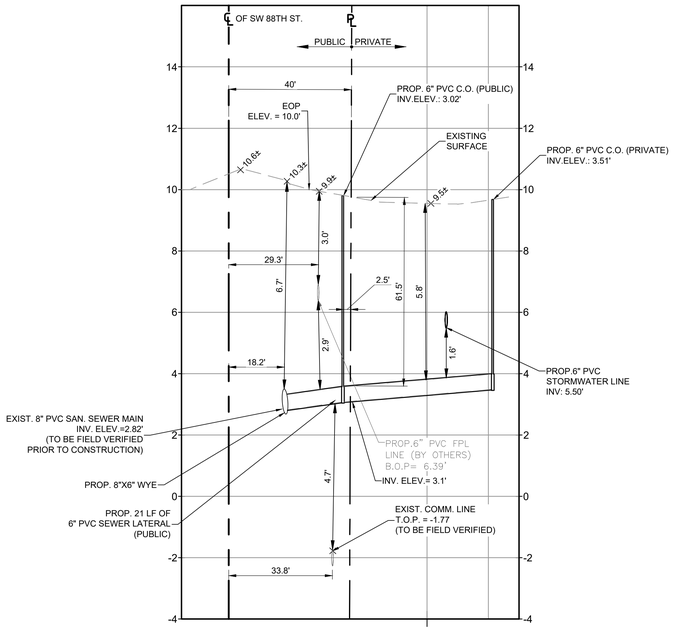

PROP. 6" SAN. SEWER LATERAL PROFILE
HORIZONTAL SCALE: 1"=20'
VERTICAL SCALE: 1"=2'

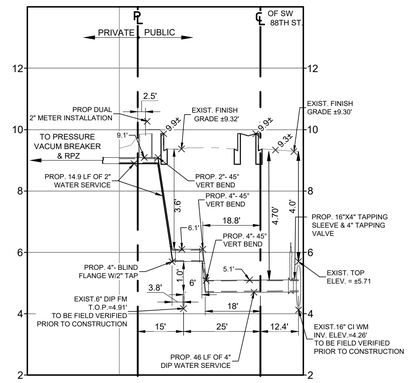

PROP. 4" DIP WATER SERVICE PROFILE
HORIZONTAL SCALE: 1"=20'
VERTICAL SCALE: 1"=2'

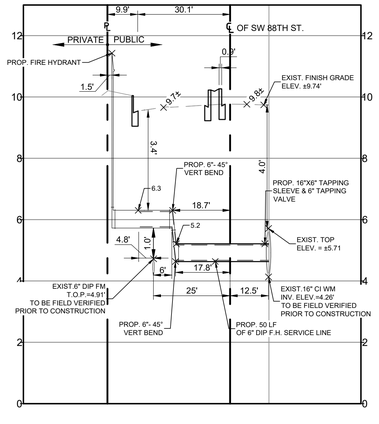

PROP. 6" DIP F.H. SERVICE PROFILE
HORIZONTAL SCALE: 1"=20'
VERTICAL SCALE: 1"=2'

PROJECT LEAD & CIVIL ENGINEERING:

KEITH
301 EAST ATLANTIC BLVD.
POMPANO BEACH, FL 33060
PH: (954) 788-3400
Florida Engineering Business License: CA7928
Florida Surveyor and Mapper Business License: LB6860
Florida Landscape Architecture Business License: LC26000457

LANDSCAPE ARCHITECT:

MKSK
801 INTERNATIONAL PARKWAY
LAKE MARY, FL 32746
407.871.9607
MKSKSTUDIOS.COM

ARCHITECT:

WANNEMACHER JENSEN ARCHITECTS
815 NORTHWEST 57 AVE. SUITE 219
MIAMI, FLORIDA 33126
727-822-5566
WJARC.COM AA0002277

MECHANICAL, PLUMBING, & ELECTRICAL ENGINEERING:

SGM ENGINEERING
5301 WATERFORD DISTRICT DR.
SUITE 750
954-421-1944
SGMENGINEERING.COM CA-00006208

REVISIONS

NO.	DESCRIPTION	DATE
	ISSUED FOR BUILDING PERMIT	11/21/2024
	REVISED FOR BUILDING PERMIT	01/10/2025

ISSUE DATE:	03/02/2025
DESIGNED BY:	BB, NW
DRAWN BY:	CD, BB
CHECKED BY:	TD

This item has been digitally signed and sealed by **Thomas F. Donahue**, P.E. on the date adjacent to the seal.

THOMAS F. DONAHUE LICENSE No. 60529 STATE OF FLORIDA PROFESSIONAL ENGINEER

Signature must be verified on any electronic copies.

2026.03.04 08:30:27 -05'00'

THOMAS F. DONAHUE, P.E.
FLORIDA REG. NO. 60529
(FOR THE FIRM)

CLIENT

VILLAGE OF PINECREST
PINECREST PARKS & RECREATION

PROJECT

GARY MATZNER PARK

SHEET TITLE

WATER & SEWER PROFILE

SHEET NUMBER **CU-201**

KEITH PROJECT NUMBER **13861.00**

STATUS: CONSTRUCTION DOCUMENTS

Plotted by: haiba On 3/3/2026 3:49 PM

Drawing name: K:\13861.00 - Gary Matzner Park Design - Village of Pinecrest\Engineering\Cadd\13861.00-CU-201.dwg

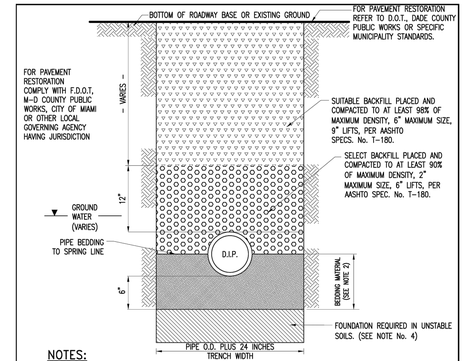

NOTES:

1. FOR EXCAVATION AND BACKFILL AROUND MANHOLES, APPURTENANCES, OR IN WATER, REFER TO PROVISIONS WITHIN THE SPECIFICATIONS.
2. UNLESS OTHERWISE SPECIFIED, BEDDING MATERIAL SHALL CONSIST OF SELECT BACKFILL MATERIAL 2" MAX. SIZE, OR WASHED AND GRADED LIMEROCK (3/8"–7/8"), COMPACTED TO AT LEAST 90' OF MAX. DENSITY, 6" LIFTS, PER AASHTO SPEC. No. T-180.
3. WHERE REQUIRED, SHEETING AND SHORING SHALL BE IN ACCORDANCE WITH SPECIFICATIONS.
4. WHERE UNSTABLE SOILS ARE ENCOUNTERED, INCLUDING PEAT, MUCK OR OTHER ORGANIC SOILS, ELASTIC SILT AND CLAYS BELOW THE WATER TABLE, A FOUNDATION IS REQUIRED. COMPACTED TO AT LEAST 90' OF MAX. DENSITY, 6" LIFTS PER AASHTO SPEC. No. T-180. FOUNDATION MATERIAL SHALL BE SELECT BACKFILL MATERIAL, 2" MAXIMUM SIZE IN 6" LIFTS. EXTEND EXCAVATION AT LEAST 2' DEEPER FOR FOUNDATION UNLESS SUITABLE MATERIAL IS FOUND AT A LESSER DEPTH. GREATER DEPTHS MAY BE REQUIRED FOR EXTREMELY POOR CONDITIONS.
5. POLYETHYLENE ENCASEMENT OF CAST IRON VALVES, PIPE AND FITTINGS, IF REQUIRED BY THE DEPARTMENT, SHALL BE PER ANSI/AWWA C105/A21.5, METHOD A, B OR C FOR TYPE I CLASS C TUBE, MIN. 8 MILS THICK.
6. NO COMPACTION IS REQUIRED BELOW THE WATER TABLE.

ITEM	CROSS REF.	SPEC. REF.

ISSUE DATE	APPROVED BY
11/01/2006	V. E. F.
01/30/2017	D.V.
09/22/2022	D.V.

STANDARD DETAIL
TYPICAL TRENCH BACKFILL FOR D.I. WATER AND FORCE MAIN

GS 1.9 — SHEET 1 OF 2

MIAMI-DADE COUNTY — Delivering Excellence Every Day — WATER & SEWER DEPARTMENT

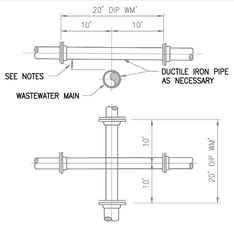

NOTES:

1. STORM SEWER, GRAVITY WASTEWATER AND RECLAIMED WATER MAIN CROSSING UNDER POTABLE WATER MAINS SHALL BE LAID TO PROVIDE A MINIMUM VERTICAL DISTANCE OF TWELVE (12) INCHES BETWEEN THE INVERT OF THE UPPER PIPE AND THE CROWN OF THE LOWER PIPE. WHERE THIS MINIMUM SEPARATION CANNOT BE MAINTAINED, THE CROSSING SHALL BE ARRANGED SO THAT THE STORM/WASTEWATER/RECLAIMED WATER PIPE JOINTS AND POTABLE WATER MAIN JOINTS ARE EQUIDISTANT FROM THE POINT OF CROSSING WITH NO LESS THAN TEN (10) FEET BETWEEN ANY TWO JOINTS, BOTH PIPES SHALL BE D.I.P., AND THE MINIMUM VERTICAL SEPARATION SHALL BE 6 INCHES. WHERE THERE IS NO ALTERNATIVE TO STORM/WASTEWATER/RECLAIMED WATER PIPES CROSSING OVER A POTABLE WATER MAIN, THE CRITERIA FOR MINIMUM 12" VERTICAL SEPARATION BETWEEN LINES AND JOINT ARRANGEMENT, AS STATED ABOVE, SHALL BE REQUIRED, AND BOTH PIPES SHALL BE D.I.P. D.I.P. IS NOT REQUIRED FOR STORM SEWERS.
2. WHENEVER POSSIBLE MAINTAIN MIN. TEN (10) FEET HORIZONTAL DISTANCE (WALL TO WALL) BETWEEN POTABLE WATER MAIN AND STORM SEWER, WASTEWATER MAIN, OR FORCE MAIN (A MIN. 6' SEPARATION MAY BE APPROVED ON A CASE BY CASE BASIS). MAINTAIN MIN. THREE (3) FEET HORIZONTAL DISTANCE (WALL TO WALL) BETWEEN RECLAIMED WATER MAIN AND POTABLE WATER MAIN, STORM SEWER, WASTEWATER GRAVITY MAIN OR FORCE MAIN.
3. FORCE MAIN CROSSING POTABLE WATER MAIN OR RECLAIMED WATER MAIN SHALL BE LAID TO PROVIDE A MINIMUM VERTICAL DISTANCE OF TWELVE (12) INCHES BETWEEN THE OUTSIDE OF THE FORCE MAIN AND OUTSIDE OF THE POTABLE WATER MAIN OR RECLAIMED WATER MAIN WITH THE POTABLE WATER MAIN OR RECLAIMED WATER MAIN CROSSING OVER THE FORCE MAIN.
4. WASTEWATER LATERALS SHALL CROSS UNDER POTABLE WATER MAINS WITH A MIN. 12" VERTICAL SEPARATION WHENEVER POSSIBLE. WHERE THIS MINIMUM SEPARATION CANNOT BE MAINTAINED, A 20' SECTION OF DUCTILE IRON PIPE POTABLE WATER MAIN CENTERED ON THE CROSSING IS REQUIRED AND THE MINIMUM VERTICAL SEPARATION SHALL BE 6". WHERE THERE IS NO ALTERNATIVE TO A WASTEWATER LATERAL PIPE CROSSING OVER A POTABLE WATER MAIN, A MINIMUM 12" VERTICAL SEPARATION IS REQUIRED, THE LATERAL SHALL BE P.V.C. C-900 SDR18 OR BETTER, THE POTABLE WATER MAIN SHALL BE D.I.P. AND THE PIPE JOINTS SHALL BE EQUIDISTANT FROM THE POINT OF CROSSING.
5. POTABLE WATER SERVICE LINES SHALL CROSS OVER WASTEWATER MAINS WITH A MIN. 12" VERTICAL SEPARATION. WHERE THIS MIN. SEPARATION CAN NOT BE MAINTAINED, THE WATER SERVICE SHALL BE ENCASED IN A MIN. 10' LONG PVC CASING CENTERED OVER THE CROSSING WITH MIN. 6" VERTICAL SEPARATION.
6. WASTEWATER MAINS, WATER MAINS, STORM PIPES AND OTHER UTILITY PIPES SHALL CROSS PERPENDICULAR WHENEVER POSSIBLE.

ITEM	CROSS REF.	SPEC. REF.

ISSUE DATE	APPROVED BY
10/1/2017	D.V.

STANDARD DETAIL
WATER AND SEWER MAINS CROSSING

GS 1.5 — SHEET 2 OF 2

MIAMI-DADE COUNTY — Delivering Excellence Every Day — WATER & SEWER DEPARTMENT

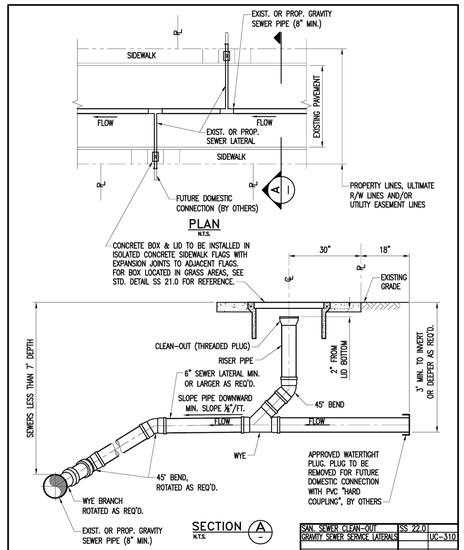

ITEM	CROSS REF.	SPEC. REF.
SAN. SEWER CLEAN-OUT	SS 22.0	
GRAVITY SEWER SERVICE LATERALS		UC-310

ISSUE DATE	APPROVED BY
08/26/2010	V.F.C.

STANDARD DETAIL
GRAVITY SEWER SERVICE LATERAL FOR "SHALLOW" SEWERS

SS 1.0 — SHEET 1 OF 2

MIAMI-DADE COUNTY — Delivering Excellence Every Day — WATER & SEWER DEPARTMENT

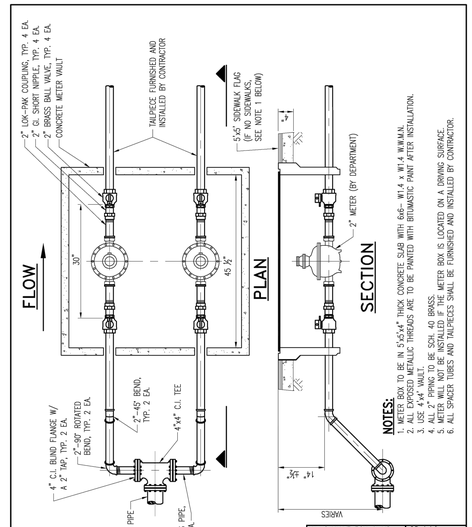

ITEM	CROSS REF.	SPEC. REF.
No. 2 VALVE BOX & LID	GS 1.1	

ISSUE DATE	APPROVED BY
09/16/2008	V.F.C.

STANDARD DETAIL
DUAL 2" METER INSTALLATION FOR TYPICAL 2" DOMESTIC SERVICE LINES

WS 4.21 — SHEET 2 OF 2

MIAMI-DADE COUNTY — Delivering Excellence Every Day — WATER & SEWER DEPARTMENT

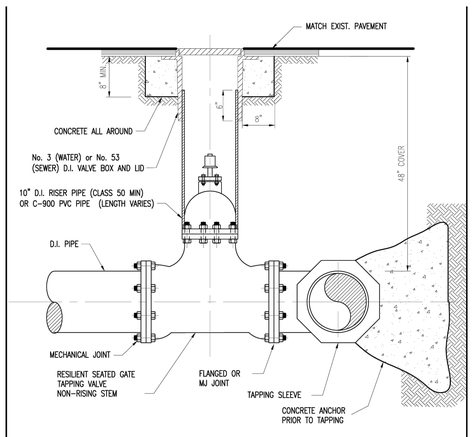

NOTES:

1. RESILIENT SEATED GATE TAPPING VALVE CAN BE USED FOR SEWER CONNECTION.
2. 18" CLEARANCE FROM FITTINGS AND BELLS.
3. TAPPING VALVE AND SLEEVE SHALL BE PRESSURE TESTED AT 150 "psi" PRIOR TO BEING TAPPED.
4. TAPPING ON CONCRETE MAINS SHALL BE PRESSURE TESTED AT A LOWER PRESSURE THAN THE ACTIVE OPERATING PRESSURE OF THE MAIN.

ITEM	CROSS REF.	SPEC. REF.
No.53 Valve Box	SS 13.0	
No.3 Valve Box	WS 3.11	
INSTALLATION	GS 1.8	

ISSUE DATE	APPROVED BY
01/22/2009	V.F.C.
07/20/2016	D.V.

STANDARD DETAIL
TYPICAL TAPPING VALVE SETTING (16" AND SMALLER)

GS 1.7 — SHEET 1 OF 1

MIAMI-DADE COUNTY — Delivering Excellence Every Day — WATER & SEWER DEPARTMENT

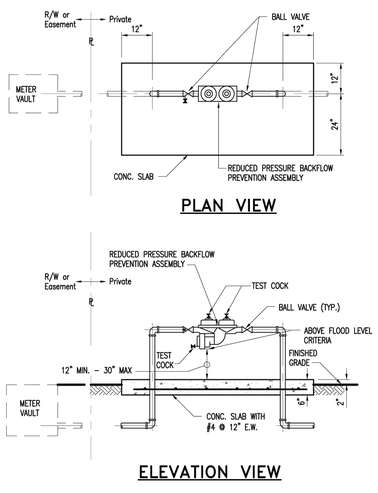

ITEM	CROSS REF.	SPEC. REF.
GUARD POST DETAIL	WS 4.5	

ISSUE DATE	APPROVED BY
6/26/2012	F.A.
3/22/2022	S.G.

STANDARD DETAIL
REDUCED PRESSURE ZONE BACKFLOW PREVENTER FOR WATER SERVICE 3/4" THRU 2"

WS 4.18 — SHEET 1 OF 3

MIAMI-DADE COUNTY — Delivering Excellence Every Day

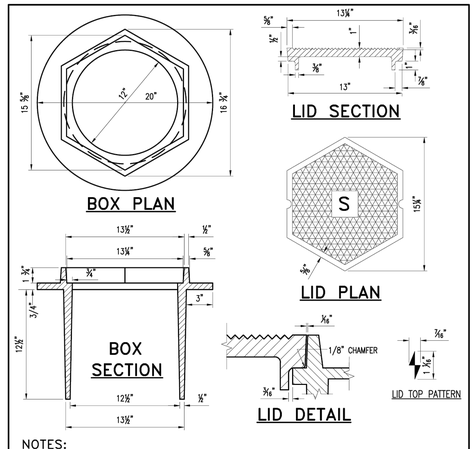

NOTES:

1. MACHINE FINISH BOTTOM OF COVER AND SEAT OF FRAME.
2. ALL DIMENSIONS ARE NET CASTING, NOT PATTERN.
3. FOUNDRY AND LOCATION SHALL BE CAST ON BOTTOM OF THE LID. (SEE WS 2.05)
4. MINIMUM WEIGHTS: RING: 134LBS COVER: 44LBS

ITEM	CROSS REF.	SPEC. REF.
XXXXX		

ISSUE DATE	APPROVED BY
06/25/2015	J.B.F.

STANDARD DETAIL
No. 53 C.I. VALVE BOX AND LID

SS 13.0 — SHEET 1 OF 1

MIAMI-DADE COUNTY — Delivering Excellence Every Day

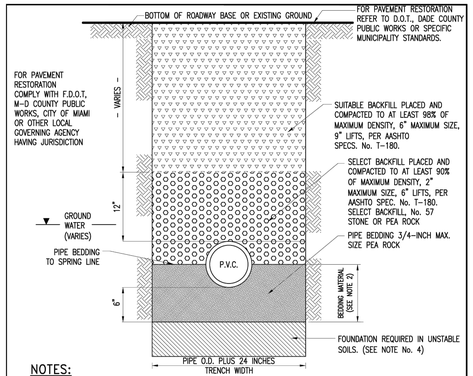

NOTES:

1. FOR EXCAVATION AND BACKFILL AROUND MANHOLES, APPURTENANCES, OR IN WATER, REFER TO PROVISIONS WITHIN THE SPECIFICATIONS.
2. FOR PVC PIPE NEW 3/4–INCH MAX SIZE PIPE BEDDING MATERIAL IS REQUIRED. EXISTING SELECT BACKFILL MATERIAL MAY BE SEGREGATED WITH ANY ROCKS LARGER THAN 2–INCHES REMOVED AND PLACED INTO THE TRENCH IF APPROVED BY THE ENGINEER.
3. WHERE REQUIRED, SHEETING AND SHORING SHALL BE IN ACCORDANCE WITH SPECIFICATIONS.
4. WHERE UNSTABLE SOILS ARE ENCOUNTERED, INCLUDING PEAT, MUCK OR OTHER ORGANIC SOILS, ELASTIC SILT AND CLAYS BELOW THE WATER TABLE, A FOUNDATION IS REQUIRED. COMPACTED TO AT LEAST 90' OF MAX. DENSITY, 6" LIFTS PER AASHTO SPEC. No. T-180. FOUNDATION MATERIAL SHALL BE SELECT BACKFILL MATERIAL, 2" MAXIMUM SIZE IN 6" LIFTS. EXTEND EXCAVATION AT LEAST 2' DEEPER FOR FOUNDATION UNLESS SUITABLE MATERIAL IS FOUND AT A LESSER DEPTH. GREATER DEPTHS MAY BE REQUIRED FOR EXTREMELY POOR CONDITIONS.
5. POLYETHYLENE ENCASEMENT OF CAST IRON VALVES, PIPE AND FITTINGS, IF REQUIRED BY THE DEPARTMENT, SHALL BE PER ANSI/AWWA C105/A21.5, METHOD A, B OR C FOR TYPE I CLASS C TUBE, MIN. 8 MILS THICK.
6. NO COMPACTION IS REQUIRED BELOW THE WATER TABLE.

ITEM	CROSS REF.	SPEC. REF.

ISSUE DATE	APPROVED BY
11/01/2006	V. E. F.
01/30/2017	D.V.
09/22/2022	D.V.

STANDARD DETAIL
TYPICAL TRENCH BACKFILL FOR PVC WATER AND FORCE MAIN

GS 1.9 — SHEET 2 OF 2

MIAMI-DADE COUNTY — Delivering Excellence Every Day — WATER & SEWER DEPARTMENT

PROJECT LEAD & CIVIL ENGINEERING:

KEITH
301 EAST ATLANTIC BLVD.
POMPANO BEACH, FL 33060
PH: (954) 788-3400
Florida Engineering Business License: CA7928
Florida Surveyor and Mapper Business License: LB6860
Florida Landscape Architecture Business License: LC26000457

LANDSCAPE ARCHITECT:

MKSK
801 INTERNATIONAL PARKWAY
LAKE MARY, FL 32746
407.871.9607
MKSKSTUDIOS.COM

ARCHITECT:

WANNEMACHER JENSEN ARCHITECTS
815 NORTHWEST 57 AVE. SUITE 219
MIAMI, FLORIDA 33126
727-822-5566
WJARC.COM AA0002277

MECHANICAL, PLUMBING, & ELECTRICAL ENGINEERING:

SGM ENGINEERING
5301 WATERFORD DISTRICT DR.
SUITE 750
954-421-1944
SGMENGINEERING.COM CA-00006208

REVISIONS

NO.	DESCRIPTION	DATE
	ISSUED FOR BUILDING PERMIT	11/21/2024
	REVISED FOR BUILDING PERMIT	01/10/2025
1	REVISION 1	11/26/2025

ISSUE DATE:	03/02/2025
DESIGNED BY:	BB, NW
DRAWN BY:	CD, BB
CHECKED BY:	TD

This item has been digitally signed and sealed by **Thomas F. Donahue**, P.E. on the date adjacent to the seal.

THOMAS F. DONAHUE — LICENSE No. 60529 — STATE OF FLORIDA — PROFESSIONAL ENGINEER

Signature must be verified on any electronic copies.

2026.03.04 08:31:06-05'00'

THOMAS F. DONAHUE, P.E.
FLORIDA REG. NO. 60529
(FOR THE FIRM)

CLIENT
VILLAGE OF PINECREST
PINECREST PARKS & RECREATION

PROJECT
GARY MATZNER PARK

SHEET TITLE
WATER AND SEWER DETAILS

SHEET NUMBER **CU-501**

KEITH PROJECT NUMBER **13861.00**

STATUS: CONSTRUCTION DOCUMENTS

Plotted by: haiba On 3/3/2026 3:59 PM

Drawing name: K:\13861.00 - Gary Matzner Park Design - Village of Pinecrest\Engineering\Cadd\13861.00-CU-SXX.dwg

1. ALL MATERIALS AND LABOR UNDER THIS PROJECT SHALL BE IN STRICT ACCORDANCE WITH THE REQUIREMENTS OF THE MIAMI-DADE WATER AND SEWER DEPARTMENT AND SHALL CONFORM TO THE STANDARDS AND SPECIFICATIONS AVAILABLE AND ON FILE WITH THE DEPARTMENT. SUBMIT SHOP DRAWINGS FOR ALL MATERIALS.
2. COVER OVER WATER OR SEWER FORCE MAINS SHALL BE 4'-0" MIN.
3. ALL MAIN LINE VALVES SHALL BE INSTALLED COMPLETE WITH 10" RISER PIPES AND NO. 3 OR 53 VALVE BOXES FIRE HYDRANTS AND SERVICE VALVES SHALL BE INSTALLED COMPLETE WITH 6" RISER PIPES AND NO. 2 VALVE BOXES.
4. ALL FORCE MAIN SERVICE CONNECTIONS INTO PRESSURE TRANSMISSION MAINS SHALL HAVE A SHUT OFF VALVE AND CHECK VALVE AT THE POINT OF ENTRY.
5. ALL GRAVITY SYSTEMS SHALL BE CONSTRUCTED IN ACCORDANCE WITH DEPARTMENT STANDARDS.
6. ALL WATER METERS WILL BE INSTALLED BY THE MIAMI-DADE WATER AND SEWER DEPARTMENT, PROVIDING THE APPROPRIATE CHARGES HAVE BEEN PREPAID.
7. FIRE HYDRANT REQUIREMENTS (NUMBER AND LOCATION) SHALL BE AS REQUIRED BY MIAMI-DADE COUNTY FIRE DEPARTMENT OR THE APPROPRIATE FIRE AGENCY WITH INSTALLATION IN ACCORDANCE WITH DEPARTMENT STANDARDS.
8. CONTRACTOR MUST CALL MDWASD INSPECTION DIVISION TO ARRANGE FOR A PRECONSTRUCTION MEETING 2 FULL BUSINESS DAYS PRIOR TO PROPOSED START OF CONSTRUCTION. CONTACT ONE CALL CENTER 48 HRS PRIOR TO EXCAVATION.
9. CONTRACT INSPECTOR WILL INSPECT ANY FACILITIES APPROVED BY THE DEPARTMENT. ALL OTHER REQUIREMENTS OF THE PERMITTING AGENCY SHALL BE IN ACCORDANCE WITH THEIR STANDARDS AND REQUIREMENTS.
10. WORK PERFORMED UNDER THIS PROJECT WILL NOT BE CONSIDERED AS COMPLETE UNTIL FINAL ACCEPTANCE OF THE SYSTEM BY THE DEPARTMENT AND UNTIL THE FOLLOWING DOCUMENTS ARE RECEIVED AND APPROVED BY THE DEPARTMENT:

a. EASEMENTS, IF REQUIRED
b. CONTRACTOR'S WAIVER AND RELEASE OF LIEN
c. ABSOLUTE BILL OF SALE
d. i. CONTRACTOR'S LETTER OF WARRANTY (I.E., LETTER AGREEMENT)
   ii DEVELOPER'S CONTRACT BOND (I.E., CONTRACT AGREEMENT).
e. "RECORD DRAWING" PRINTS (24"x 36") SHOWING SPECIFIC LOCATIONS, DEPTH, ETC. OF ALL WATER AND SEWER FACILITIES AS LOCATED BY A LICENSED SURVEYOR & MAPPER, ALONG WITH PRINTS OF "RECORD DRAWINGS" WHICH HAVE BEEN SIGNED AND SEALED BY A REGISTERED SURVEYOR & MAPPER. (No. OF PRINTS: 3-FOR WATER, 4-FOR GRAVITY SEWER AND 5-FOR FORCE MAIN OR PUMP STATION PROJECTS). Submittal of final CAD Files required.
f. H.R.S. LETTER OF RELEASE REQUIRED FOR ALL WATER PROJECTS
g. BILL OF SALE SKETCH (8½"x 11") FOR WATER AND SEWER, SEPARATELY

11. ALL NEW CONNECTIONS FROM EXISTING DEPARTMENT MAINS TO BE MADE BY DEPARTMENT FORCES ONLY. THE CONTRACTOR TO EXCAVATE AT REQUIRED LOCATIONS, PROVIDE AND INSTALL MATERIAL WITH FITTINGS, PRIOR TO TAP.
12. AN APPROVED PAVING AND DRAINAGE PLAN MUST BE SUBMITTED TO MDWASD FOR ALL NEW SUBDIVISIONS PRIOR TO APPROVAL OF WATER AND SEWER PERMIT PLANS, UPON REQUEST.
13. UNLESS OTHERWISE SPECIFIED, ALL TAPS 20 INCHES AND SMALLER FOR CONNECTIONS TO EXISTING MAINS WILL BE DONE BY DEPARTMENT FORCES. UNDER NO CIRCUMSTANCES WILL THE CONTRACTOR BE PERMITTED TO TAP EXISTING MAINS IN THE SIZE RANGE SPECIFIED ABOVE. THE TAPPING SLEEVE AND TAPPING VALVE ARE FURNISHED AND INSTALLED BY THE CONTRACTOR UNDER THE SUPERVISION OF THE INSPECTOR.

MIAMI-DADE COUNTY — Delivering Excellence Every Day — WATER & SEWER DEPARTMENT	ISSUE DATE	APPROVED BY	STANDARD DETAIL	ITEM / CROSS REF. / SPEC. REF.
	03/01/2010	V.F.C.	STANDARD REQUIREMENTS WATER AND SEWER CONSTRUCTION	GS 0.5
	07/20/2016	D.V.		SHEET 1 OF 2

1. AT THE COMPLETION OF ANY WATER AND SEWER JOB EITHER DONATION OR CONTRACT, THE CONTRACTOR SHALL SUBMIT:
   a. RECORD DRAWING PRINTS WHICH HAVE BEEN SIGNED AND SEALED BY A FLORIDA LICENSED PROFESSIONAL SURVEYOR AND MAPPER (QTY. OF PRINTS AS REQUIRED BY THE DEPARTMENT).
2. "RECORD DRAWING" FORMAT:
   a. 24"x 36" PRINTS
   b. PDF FILE
   c. CADD FILE (DWG OR DXF) ROTATED AND TRANSLATED TO STATE PLANE COORDINATES NAD 83 FLORIDA EAST ZONE
   d. THE WORDS "RECORD DRAWING" IN LARGE LETTERS
   e. TITLE BLOCK WITH DEPARTMENT DS, DW OR ER NUMBER AND PERTINENT INFORMATION
   f. PREFERRED SCALE TO BE 1"= 40' HORIZONTALLY AND 1"= 4' VERTICALLY*
   g. STREET NOMENCLATURE
   h. SEPARATE RECORD DRAWINGS FOR WATER AND SEWER
   i. SEPARATE WATER AND SEWER PROFILE
   j. STATIONING STARTING WITH 0+00 AT PERMANENT REFERENCE POINT (I.E. ℄, ℄, ETC.) OR AS SHOWN ON DESIGN PERMIT PLANS, AND TO RUN CONTINUOUSLY TO END OF MAIN
   k. EASEMENTS, IF ANY, TIED TO PERMANENT REFERENCE POINT
   l. IDENTIFY ALL CONTROL LINES (I.E. BLDG. LINE, PROPERTY LINE, R/W, ETC.)
   m. ALL "PROPOSED" INFORMATION TO BE REMOVED FROM PRINTS, LEAVING ONLY RECORD DRAWING INFORMATION REFLECTED IN DRAWINGS
3. WATER "RECORD DRAWINGS" MUST INCLUDE:
   a. PLANS SHOWING PIPE SIZE, MATERIAL AND OFFSET OF MAIN, DEFLECTIONS (IF ANY), STATION OF SERVICES, HYDRANTS, VALVES, FITTINGS, IF ANY, ALL IN STATE PLANE COORDINATES. UTILITY CROSSINGS SHALL BE CLEARLY IDENTIFIED AND LOCATED.
   b. PROFILE SHOWING TOP OF GROUND AND TOP OF PIPE ELEVATIONS AT EVERY 100' STATION AND AT ANY CHANGE IN GRADE (WITH CORRESPONDING STATION), PIPE SIZE AND PIPE MATERIALS REFERENCED TO PLAN.
4. SEWER "RECORD DRAWINGS" MUST INCLUDE:
   a. PLAN SHOWING MANHOLE NUMBER, PIPE SIZE AND PIPE MATERIAL OF PIPE, DEFLECTION, SLOPE OF GRAVITY SEWER, LOCATION OF LATERALS WITH REFERENCE TO MANHOLE AND CLEANOUTS.
   b. THE NORTHERLY AND EASTERLY COORDINATES ON ALL FIELD OBTAINED MEASUREMENTS AND PROVIDED ON ALL RECORD DRAWING SUBMITTALS
   c. PROFILE SHOWING MANHOLE NUMBER (AS PER PLAN), RIM AND INVERT ELEVATIONS (IF MORE THAN ONE INVERT, LABEL NORTH, SOUTH, ETC.), AND STATION STARTING AT 0+00 AT DOWNSTREAM MANHOLE.
5. FORCE MAIN "RECORD DRAWING" SAME AS WATER MAIN.
6. EACH RECORD DRAWING SHALL SHOW THE FLORIDA STATE PLANE COORDINATES (CURRENT READJUSTMENT) OF ALL THE MANHOLES AND VALVES AND OF AT LEAST TWO HORIZONTAL CONTROL POINTS PROPERLY IDENTIFIED AND LOCATED WITHIN THE PROJECT.

* OTHER SCALE MAY BE PERMITTED, BUT MUST BE APPROVED BY THE DEPARTMENT PRIOR TO PREPARATION OF DRAWINGS.

MIAMI-DADE COUNTY — Delivering Excellence Every Day — WATER & SEWER DEPARTMENT	ISSUE DATE	APPROVED BY	STANDARD DETAIL	ITEM / CROSS REF. / SPEC. REF.
	03/11/2009	V.F.C.	"RECORD DRAWING" REQUIREMENTS	GS 0.5
	07/20/2016	D.V.		SHEET 2 OF 2

HEALTH DEPARTMENT NOTES

(NOT A PART OF M-DWASD NOTES OR APPROVAL)

WATER MAIN HORIZONTAL SEPARATIONS

SEPARATIONS SHALL BE MEASURED OUTSIDE EDGE TO OUTSIDE EDGE BETWEEN WATER MAINS AND, STORM SEWERS, STORMWATER FORCE MAINS, OR RECLAIMED WATER LINES, SHALL BE 3 FT MINIMUM.

BETWEEN WATER MAINS AND VACUUM TYPE SEWER PREFERABLY 10 FT. AND AT LEAST 3 FT. MINIMUM.

GRAVITY OR PRESSURE SANITARY SEWERS, WASTEWATER FORCE MAINS OR RECLAIMED WATER PREFERABLY 10 FT. AND AT LEAST 6 FT. MAY BE REDUCED TO 3 FT. WHERE BOTTOM OF WATER MAINS IS AT LEAST 6 INCHES ABOVE TOP OF SEWER.

10 FT. TO ANY PART OF ON-SITE SEWER TREATMENT OR DISPOSAL SYSTEM.

WATER MAIN VERTICAL SEPARATIONS

SEPARATIONS BETWEEN WATER MAINS AND GRAVITY SEWER, VACUUM TYPE SEWER, OR STORM SEWERS, TO BE PREFERABLY 12 INCHES, OR AT LEAST 6 INCHES ABOVE, OR AT LEAST 12 INCHES IF BELOW.*

PRESSURE SANITARY SEWER, WASTEWATER OR STORMWATER FORCE MAIN, OR RECLAIMED WATER, AT LEAST 12 INCHES ABOVE OR BELOW.*

* NOTE: CENTER 1-FULL LENGTH OF WATER MAIN PIPE AT CROSSINGS; ALTERNATIVELY ARRANGE PIPES SO JOINTS ARE AT LEAST 3 FEET FROM JOINTS IN VACUUM, STORM OR STORM FORCE MAINS. AT LEAST 6 FEET FROM JOINTS IN GRAVITY OR PRESSURE SEWERS, WASTEWATER FORCE MAINS OR RECLAIMED WATER.

NOT PART OF MD-WASD NOTES NOR APPROVAL

MIAMI-DADE COUNTY

RER-DERM WATER-SEWER GENERAL NOTES

1. A horizontal distance of at least 6 feet, and preferably 10 feet (outside to outside), shall be maintained between gravity or pressure sewer pipes and water pipes. The minimum horizontal separation can be reduced to 3 feet for vacuum-type sewers or for gravity sewers where the top of the sewer pipe is at least 6 inches below the bottom of the water pipe. When the above specified horizontal distance criteria cannot be met due to an existing underground facility conflict, smaller separations are allowed if one of the following is met:
   a) The sewer pipes are designed and constructed equal to the water pipe and pressure tested at 150 psi.
   b) The sewer is encased in a watertight carrier pipe or concrete.
   c) The top of the sewer is at least 18 inches below the bottom of the water pipe.
2. A vertical distance of at least 12 inches (outside to outside) shall be maintained between any water and sewer mains with sewer pipes preferably crossing under water mains. The minimum vertical separation can be reduced to 6 inches for vacuum-type sewers or for gravity sewers where the sewer pipe is below the water main. The crossing shall be arranged so that all water main joints are at least 6 feet from all joints in gravity and pressure sewer pipes. This distance can be reduced to 3 feet for vacuum-type sewers. When the above specified vertical distance criteria cannot be met due to an existing underground facility conflict, smaller separations are allowed if one of the following is met:
   a) The sewer pipes are designed and constructed equal to the water pipe and pressure tested at 150 psi.
   b) The sewer is encased in a watertight carrier pipe or concrete.
3. Air release valves shall be provided at high points of new force main sanitary sewers.
4. Gravity sanitary sewers constructed within a public wellfield protection area shall be C-900 PVC or Ductile Iron Pipe. The maximum allowable exfiltration rate of gravity sanitary sewers constructed in a public wellfield protection area shall be:
   a) Residential Land Uses. Fifty (50) gallons per inch pipe diameter per mile per day, based on a minimum two (2) hour test having a minimum of two (2) feet of positive head above the crown of the pipe.
   b) Non-Residential Land Uses. Twenty (20) gallons per inch pipe diameter per mile per day, based on a minimum two (2) hour test having a minimum of two (2) feet of positive head above the crown of the pipe.
   c) Any observed leaks or any obviously defective joints or pipes shall be replaced even when the total leakage is below that allowed.
5. The maximum allowable exfiltration rate of gravity sanitary sewers constructed outside a public wellfield protection area shall be one hundred (100) gallons per inch pipe diameter per mile per day, based on a minimum two (2) hour test having a minimum of two (2) feet of positive head above the crown of the pipe. Any observed leaks or any obviously defective joints or pipes shall be replaced even when the total leakage is below that allowed.
6. Forcemain sanitary sewers constructed within a public wellfield protection area shall be ductile iron, C-900 PVC, HDPE or reinforced concrete pressure sewer pipes.
7. The maximum allowable exfiltration/leakage rate of forcemain sanitary sewers shall be:
   a) Ductile Iron, C-900 PVC, HDPE and PVC Pipe. The allowable leakage rate specified in American Water Works Association Standard (AWWAS) C600-82 at a test pressure of 100 psi for a duration of not less than two (2) hours.
   b) Reinforced Concrete Pressure Pipe. Half (1/2) the allowable leakage rate specified in AWWA C600-82 at a test pressure of 100 psi for a duration of not less than two (2) hours.
   c) Any observed leaks or any obviously defective joints or pipes shall be replaced even when the total leakage is below that allowed.
8. The contractor shall verify nature, depth, and character of existing underground utilities prior to start of construction.
9. In no case shall a contractor install utility pipes, conduits, cables, etc. in the same trench above an existing water or sewer pipe except where they cross.
10. If any area of the work site is found to contain buried solid waste and/or ground or ground water contamination, the following shall apply:
    a) All work in the area shall follow all applicable safety requirements (e.g., OSHA, etc.) and notification must be provided to the appropriate agencies.
    b) Immediately notify the Environmental Monitoring and Restoration Division (EMRD). The EMRD can be contacted at (305) 372-6700.
    c) If contaminated soils and/or buried solid waste material is excavated during construction, then they require proper handling and disposal in accordance with the local, state and federal regulations. Be advised that the landfill owner/operator is the final authority on disposal and may have requirements beyond those provided by herein. If disposal within a Miami-Dade County owned landfill (Class I landfill) is appropriate and selected, please contact the Miami-Dade County Department of Solid Waste Management at (305) 594-6666 for information.
    d) The reuse of contaminated soils that are not returned to the original excavation requires prior approval of a Soil Management Plan from the Environmental Monitoring and Restoration Division. The EMRD can be contacted at (305) 372-6700.
11. Pumps must comply with the National Electrical Code (NEC) requirements for Class I, Group D, Division 1 locations (Explosion Proof).
12. The contractor is advised that a Tree Removal/Relocation Permit may be required prior to the removal and/or relocation of tree resources. Prior to removing or relocating any trees, the Contractor shall notify the Tree and Forest Resources Section of DERM at (305) 372-6574 or via e-mail at: tfrs@miamidade.gov , or contact the municipality with tree ordinance jurisdiction to obtain any required permits. Those trees not interfering with the construction shall be protected in place in accordance with the provisions of Section 24-49.5 of the Miami-Dade Code.
13. Please note that the demolition, removal, and/or disturbance of existing underground utilities that contain asbestos- cement pipes (ACP) are subject to the provisions of 40 CFR-61 Subpart M. Therefore, pursuant to the provisions of 40 CFR-61-145, a NOTICE OF DEMOLITION OR ASBESTOS RENOVATION form must be filed with the Air Quality Management Division (AQMD) of DERM, at least ten (10) working days prior to starting of any work. Note that the backfilling and burial of crushed ACP would cause these locations to be considered active disposal sites and subject to 40 CFR-61.154, and 40 CFR-61.151 a year after project completion.
    Existing standard operating procedures, as well as applicable federal, state and local regulatory criteria, must be followed and implemented to minimize any potential release of fugitive emissions, especially during project construction activities. The AQMD can be contacted via email at asbestos@miamidade.gov or 305-372-6925.

Rev. 4/30/2018

p:\pollution regulation\delegated env permitting\ww-conv_extensions\sewer extensions\forms and package\se application package\se permit package\package march-2017\rer-derm-notes official last one-revised(2018-0429).doc

M-D WASD NOTES:

FOR ALL PROJECTS WHERE REMOVAL OF UTILITY LINES IS PROPOSED

1. ALL EXISTING UTILITIES BEING REMOVED AND/OR RELOCATED MUST REMAIN ACTIVE AND IN SERVICE, UNTIL SUCH TIME WHEN NEW REPLACING UTILITIES HAVE BEEN INSTALLED, IN SERVICE, ACCEPTED BY THE DEPARTMENT AND ALL RELATED SERVICES FROM THE EXISTING MAINS HAVE BEEN TRANSFERRED TO THE NEW ONES, BY A LICENSED CONTRACTOR UNDER SUPERVISION OF WASD LICENSED OPERATOR AND WASD DONATION INSPECTOR UNDER THE SCOPE AND JURISDICTION OF THE CONTRACTOR'S RIGHT-OF-WAY PERMIT.

2. ALL WATER AND/OR SEWER FACILITIES LOCATED IN PRIVATE PROPERTY SHALL BE REMOVED AFTER ALL INSTALLED SERVICES FROM THEM HAVE BEEN TRANSFERRED TO THE ALREADY INSTALLED AND IN SERVICE NEW MAINS. ANY ASSOCIATED EXCLUSIVE EASEMENTS SHALL BE CLOSED AND RELEASED AFTER THE REMOVAL OF THE EXISTING WATER AND/OR SEWER FACILITIES.

DISCLOSURE RELATED TO CRITICAL HABITAT FOR ENDANGERED SPECIES
(NOT PART OF MD WASD NOTES NOR APPROVAL)

PLEASE BE ADVISED THAT THE FEDERAL GOVERNMENT HAS DESIGNATED ALL OR A PART OF THE SUBJECT PROPERTY AS CRITICAL HABITAT FOR ONE OR MORE ENDANGERED SPECIES.

YOU ARE NOT AUTHORIZED TO COMMENCE ANY WORK OR ACTIVITIES PURSUANT TO THIS PERMIT UNTIL YOU OBTAIN ANY AND ALL APPROVALS OR PERMITS, IF NECESSARY, FROM THE FEDERAL GOVERNMENT PURSUANT TO THE ENDANGERED SPECIES ACT AND FROM THE STATE OF FLORIDA PURSUANT TO FLORIDA LAW ON ENDANGERED SPECIES. PLEASE BE ADVISED THAT, EVEN AFTER WORK COMMENCES, IF MIAMI-DADE COUNTY IS ADVISED BY THE FEDERAL GOVERNMENT, THE STATE OF FLORIDA, OR A COURT THAT AN ACTIVITY ON THE SUBJECT PROPERTY IS IN VIOLATION OF THE ENDANGERED SPECIES ACT, IN VIOLATION OF FLORIDA LAW ON ENDANGERED SPECIES, OR IN VIOLATION OF A PERMIT OR APPROVAL GRANTED BY THE FEDERAL GOVERNMENT PURSUANT TO THE ENDANGERED SPECIES ACT, SUCH VIOLATION MAY RESULT IN AN IMMEDIATE STOP WORK ORDER.

YOU ARE STRONGLY ADVISED TO CONSULT WITH THE UNITED STATES FISH AND WILDLIFE SERVICE AND ANY OTHER NECESSARY FEDERAL OR STATE AGENCIES BEFORE CONDUCTING ANY WORK OR\ ACTIVITIES ON THE PROPERTY. THE VERO BEACH OFFICE OF THE UNITED STATES FISH AND WILDLIFE SERVICE MAY BE REACHED AT (772) 562-3909. PLEASE BE AWARE THAT THE FEDERAL GOVERNMENT MAY REQUIRE CERTAIN ACTIONS OR PROTECTIONS ON THE PROPERTY, AND THIS MAY RESULT IN THE NEED TO MODIFY THE PLANS FOR THE PROPERTY. THEREFORE, IT IS RECOMMENDED THAT YOU CONSULT WITH THE UNITED STATES FISH AND WILDLIFE SERVICE AT AN EARLY STAGE IN THE PROCESS.

IN THE EVENT THAT THE UNITED STATES FISH AND WILDLIFE SERVICE ADVISES THAT YOUR PLANS FOR THE SUBJECT PROPERTY MAY RESULT IN A "TAKE" OF ENDANGERED OR THREATENED SPECIES, YOU ARE STRONGLY RECOMMENDED TO INFORM MIAMI-DADE COUNTY IN WRITING AT THE EARLIEST STAGE POSSIBLE.

(NOT PART OF WASD REVIEW NOR APPROVAL)
CONTRACTOR TO RESTORE/ RECONSTRUCT EXISTING PAVEMENT, SIDEWALK, PAVEMENT MARKINGS OR OTHER SURFACE TREATMENT DISTURBED DURING INSTALLATION OF NEW CONNECTION/ SERVICE IMPROVEMENTS.

(NOT PART OF WASD REVIEW NOR APPROVAL)
LOCATION AND SIZE OF ALL EXISTING UTILITIES AND TOPOGRAPHY (FACILITIES) AS SHOWN ON CONSTRUCTION DRAWINGS ARE DRAWN FROM AVAILABLE RECORDS. THE ENGINEER ASSUMES NO RESPONSIBILITY TO DETERMINE THE EXACT LOCATION (VERTICAL & HORIZONTAL) OF ANY EXISTING UTILITIES AND TOPOGRAPHY PRIOR TO CONSTRUCTION. THE CONTRACTOR SHALL VERIFY THE ELEVATIONS AND LOCATIONS OF ALL EXISTING FACILITIES, IN COORDINATION WITH ALL UTILITY COMPANIES, PRIOR TO BEGINNING ANY CONSTRUCTION, THE CONTRACTOR SHALL WITH THE PROPOSED CONSTRUCTION, THE CONTRACTOR SHALL IMMEDIATELY NOTIFY THE ENGINEER SO THAT APPROPRIATE MEASURES CAN BE TAKEN TO RESOLVE THE CONFLICT.

(NOT PART OF MD-WASD NOTES NOR APPROVAL)
ALL ON-SITE WATER AND SANITARY SEWER LINES/INFRASTRUCTURE ARE PRIVATE

PROJECT LEAD & CIVIL ENGINEERING:
KEITH
301 EAST ATLANTIC BLVD.
POMPANO BEACH, FL 33060
PH: (954) 788-3400
Florida Engineering Business License: CA7928
Florida Surveyor and Mapper Business License: LB6860
Florida Landscape Architecture Business License: LC26000457

LANDSCAPE ARCHITECT:
MKSK
801 INTERNATIONAL PARKWAY
LAKE MARY, FL 32746
407.871.9607
MKSKSTUDIOS.COM

ARCHITECT:
WANNEMACHER JENSEN ARCHITECTS
815 NORTHWEST 57 AVE. SUITE 219
MIAMI, FLORIDA 33126
727-822-5566
WJARC.COM AA0002277

MECHANICAL, PLUMBING, & ELECTRICAL ENGINEERING:
SGM ENGINEERING
5301 WATERFORD DISTRICT DR.
SUITE 750
954-421-1944
SGMENGINEERING.COM CA-00006208

Plotted by: halba On 3/3/2026 3:50 PM

REVISIONS

NO.	DESCRIPTION	DATE
	ISSUED FOR BUILDING PERMIT	11/21/2024
	REVISED FOR BUILDING PERMIT	01/10/2025
1	REVISION 1	11/26/2025

ISSUE DATE:	03/02/2025
DESIGNED BY:	BB, NW
DRAWN BY:	CD, BB
CHECKED BY:	TD

This item has been digitally signed and sealed by **Thomas F. Donahue**, P.E. on the date adjacent to the seal.

THOMAS F. DONAHUE — LICENSE No. 60529 — STATE OF FLORIDA — PROFESSIONAL ENGINEER

Signature must be verified on any electronic copies.

2026.03.04 08:31:41-05'00'

THOMAS F. DONAHUE, P.E.
FLORIDA REG. NO. 60529
(FOR THE FIRM)

CLIENT
VILLAGE OF PINECREST
PINECREST PARKS & RECREATION

PROJECT
GARY MATZNER PARK

Drawing name: K:\13861.00 - Gary Matzner Park Design - Village of Pinecrest\Engineering\Cadd\13861.00-CU-5XX.dwg

SHEET TITLE
WATER AND SEWER DETAILS

SHEET NUMBER CU-502

KEITH PROJECT NUMBER 13861.00

STATUS: CONSTRUCTION DOCUMENTS

NOTE:

1. EXISTING MARKINGS SHALL BE REMOVED BY WATER BLASTING OR SANDBLASTING ONLY.
2. ALL EXISTING TRAFFIC CONTROL SIGNAGE AND PAVEMENT MARKINGS IN CONFLICT WITH THE PROPOSED TRAFFIC CONTROL SIGNAGE AND PAVEMENT MARKINGS WILL BE REMOVED OR RELOCATED BY THE CONTRACTOR.
3. ALL CONSTRUCTION SHALL BE IN ACCORDANCE WITH THE MANUAL OF UNIFORM TRAFFIC CONTROL DEVICES (M.U.T.C.D.) AND FLORIDA DEPARTMENT OF TRANSPORTATION ROADWAY TRAFFIC AND DESIGN STANDARDS.
4. ALL MARKINGS WITHIN R/W SHALL BE THERMOPLASTIC. ALL ON-SITE MARKINGS SHALL BE PAINT EXCEPT 24" SOLID WHITE STOP BARS WHICH SHALL BE THERMOPLASTIC.
5. FDOT APPROVED SEALER SHALL BE USED WHEN APPLYING MARKINGS ON CONCRETE.
6. ALL PAVEMENT MARKINGS ON PAVER SYSTEMS SHALL BE 3M $\frac{5730}{31}$ TAPE AND APPLIED WITH AN E44 CONTACT CEMENT AS PER MANUFACTURER'S SPECIFICATIONS.
7. VERIFY LOCATION OF ALL UNDERGROUND UTILITIES PRIOR TO INSTALLATION OF SIGN POSTS.
8. ALL PARKING LOT STRIPES BETWEEN PARKING STALLS SHALL BE 4" WHITE PAINT, EXCEPT FOR HANDICAP PARKING SPACES, WHICH SHALL MEET FDOT STANDARDS.
9. ALL STOP BARS SHALL BE THERMOPLASTIC AND HAVE GLASS BEADS.
10. THESE CIVIL ENGINEERING PLANS ARE FOR PAVING, STORM DRAINAGE, GRADING, WATER DISTRIBUTION, SANITARY SEWER COLLECTION, PAVEMENT MARKINGS AND SIGNAGE, AND CIVIL ENGINEERING DETAILS ONLY, FOR EXACT LAY-OUT, SETBACKS, ZONING INFORMATION, ZONING SETBACKS, ETC., SEE PLANS PREPARED BY THE ARCHITECT.
11. ALL STOP SIGNS SHALL BE A MINIMUM OF 4' BEHIND CROSSWALK.
12. 24" STOP BAR AT R.O.W. SHALL BE THERMOPLASTIC.
13. THE CITY ENGINEER IS RESPONSIBLE FOR REVIEWING AND APPROVING THE ON-SITE PAVEMENT MARKINGS AND SIGNAGE, AND FOR INSPECTING AND ACCEPTING THE ON-SITE PAVEMENT MARKINGS AND SIGNAGE FOR MAINTENANCE BY THE PROPERTY OWNER.
14. REFER TO SHEETS GI-001 - 003 FOR ADDITIONAL NOTES.
15. REFER TO SURVEY FOR LEGAL DESCRIPTION

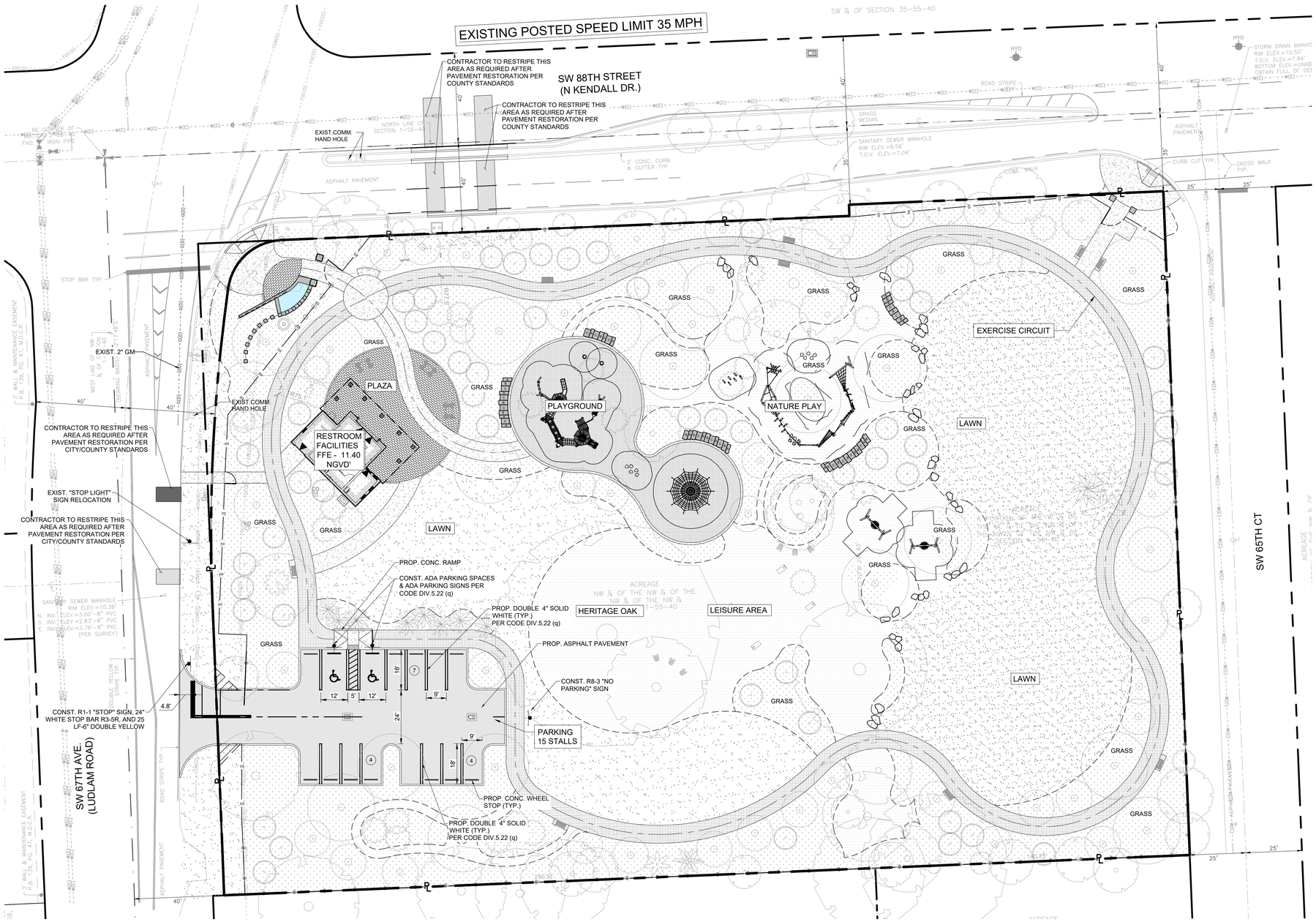

PROJECT LEAD & CIVIL ENGINEERING:

KEITH
301 EAST ATLANTIC BLVD.
POMPANO BEACH, FL 33060
PH: (954) 788-3400
Florida Engineering Business License: CA7928
Florida Surveyor and Mapper Business License: LB6860
Florida Landscape Architecture Business License: LC26000457

LANDSCAPE ARCHITECT:

MKSK
801 INTERNATIONAL PARKWAY
LAKE MARY, FL 32746
407.871.9607
MKSKSTUDIOS.COM

ARCHITECT:

WANNEMACHER JENSEN ARCHITECTS
815 NORTHWEST 57 AVE. SUITE 219
MIAMI, FLORIDA 33126
727-822-5566
WJARC.COM AA0002277

MECHANICAL, PLUMBING, & ELECTRICAL ENGINEERING:

SGM ENGINEERING
5301 WATERFORD DISTRICT DR.
SUITE 750
954-421-1944
SGMENGINEERING.COM CA-00006208

REVISIONS

NO.	DESCRIPTION	DATE
	ISSUED FOR BUILDING PERMIT	11/21/2024
	REVISED FOR BUILDING PERMIT	01/10/2025

ISSUE DATE:	03/02/2025
DESIGNED BY:	BB, NW
DRAWN BY:	CD, BB
CHECKED BY:	TD

This item has been digitally signed and sealed by **Thomas F. Donahue**, P.E. on the date adjacent to the seal.

THOMAS F. DONAHUE LICENSE No. 60529 STATE OF FLORIDA PROFESSIONAL ENGINEER

Signature must be verified on any electronic copies.

2026.03.04 08:32:02-05'00'

THOMAS F. DONAHUE, P.E.
FLORIDA REG. NO. 60529
(FOR THE FIRM)

CLIENT

VILLAGE OF PINECREST
PINECREST PARKS & RECREATION

PROJECT

GARY MATZNER PARK

SHEET TITLE

PAVEMENT MARKING AND SIGNAGE PLAN

SHEET NUMBER CM-101

KEITH PROJECT NUMBER 13861.00

STATUS: CONSTRUCTION DOCUMENTS

Plotted by: haiba On 3/3/2026 3:53 PM

Drawing name: K:\13861.00 - Gary Matzner Park Design - Village of Pinecrest\Engineering\Cadd\13861.00-CM-1XX.dwg

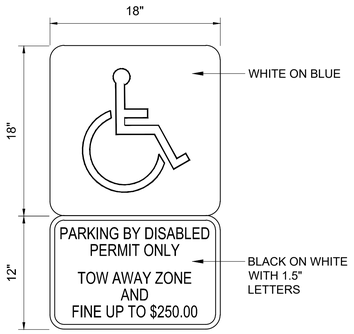

NOTES:

1. TOP PORTION OF SIGN SHALL HAVE A REFLECTIVE BLUE BACKGROUND WITH WHITE REFLECTIVE SYMBOL.
2. BOTTOM PORTION SHALL HAVE A REFLECTIVE WHITE BACKGROUND WITH BLACK OPAQUE LEGEND AND BORDER.
3. SIGN MAY BE FABRICATED ON ONE PANEL OR TWO.
4. SIGNS ARE TO BE MOUNTED AT A HEIGHT OF 5 FT. MINIMUM FROM PAVEMENT TO BOTTOM OF SIGN.

1 HANDICAP PARKING SIGN DETAIL

NOT TO SCALE

NOTES:

1. DIMENSIONS ARE TO THE CENTERLINE OF MARKINGS.
2. AN ACCESS AISLE IS REQUIRED FOR EACH ACCESSIBLE SPACE WHEN ANGLE PARKING IS USED.
3. CRITERIA FOR PAVEMENT MARKINGS ONLY, NOT PUBLIC SIDEWALK CURB RAMP LOCATIONS. FOR RAMP LOCATIONS REFER TO PLANS.
4. TINT BLUE PAVEMENT MARKINGS TO MATCH COLOR 15180 OF FEDERAL STANDARDS 595A.
5. MOUNT FTP-22-06 SIGN BELOW THE FTP-21-06 SIGN.
6. USE OF THE PAVEMENT SYMBOL IN ACCESSIBLE PARKING SPACES IS EITHER 3'-0" OR 5"-0" HIGH AND BLUE IN COLOR (SEE NOTE #4 FOR COLOR DETAIL).

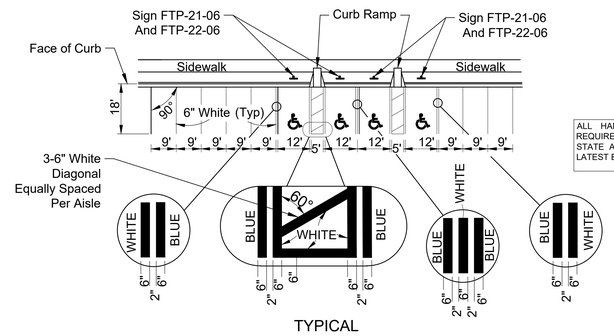

ALL HANDICAP ACCESSIBLE AREAS TO CONFORM TO THE REQUIREMENTS OF THE AMERICAN WITH DISABILITIES ACT (ADA), STATE ADA CODES, AND FLORIDA BUILDING CODE ADA CODES LATEST EDITION.

2 TYPICAL ADA PARKING DETAIL PER FDOT STD. DETAIL No. 711-001 (FY 2022-23)

NOT TO SCALE

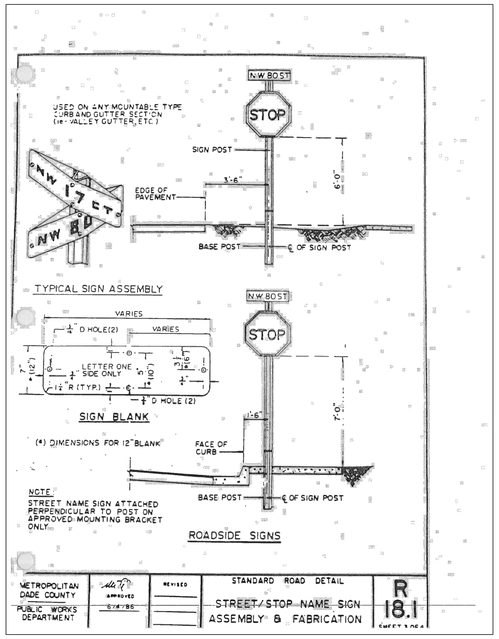

R3-5R
Right Turn Only

PROJECT LEAD
& CIVIL ENGINEERING:

KEITH
301 EAST ATLANTIC BLVD.
POMPANO BEACH, FL 33060
PH: (954) 788-3400
Florida Engineering Business License: CA7928
Florida Surveyor and Mapper Business License: LB6860
Florida Landscape Architecture Business License: LC26000457

LANDSCAPE ARCHITECT:

MKSK
801 INTERNATIONAL PARKWAY
LAKE MARY, FL 32746
407.871.9607
MKSKSTUDIOS.COM

ARCHITECT:

WANNEMACHER JENSEN ARCHITECTS
815 NORTHWEST 57 AVE. SUITE 219
MIAMI, FLORIDA 33126
727-822-5566
WJARC.COM AA0002277

MECHANICAL, PLUMBING,
& ELECTRICAL ENGINEERING:

SGM ENGINEERING
5301 WATERFORD DISTRICT DR.
SUITE 750
954-421-1944
SGMENGINEERING.COM CA-00006208

REVISIONS

NO.	DESCRIPTION	DATE
	ISSUED FOR BUILDING PERMIT	11/21/2024
	REVISED FOR BUILDING PERMIT	01/10/2025

ISSUE DATE: 03/02/2025
DESIGNED BY: BB, NW
DRAWN BY: CD, BB
CHECKED BY: TD

This item has been digitally signed and sealed by **Thomas F. Donahue**, P.E. on the date adjacent to the seal.
Signature must be verified on any electronic copies.

THOMAS F. DONAHUE LICENSE No. 60529 STATE OF FLORIDA PROFESSIONAL ENGINEER

2026.03.04 08:32:31-05'00'
THOMAS F. DONAHUE, P.E.
FLORIDA REG. NO. 60529
(FOR THE FIRM)

CLIENT
VILLAGE OF PINECREST
PINECREST PARKS & RECREATION

PROJECT
GARY MATZNER PARK

SHEET TITLE
PAVEMENT MARKING AND SIGNAGE DETAILS

SHEET NUMBER CM-501

KEITH PROJECT NUMBER 13861.00

STATUS: CONSTRUCTION DOCUMENTS

Plotted by: hallsa On 3/3/2026 3:53 PM

Drawing name: K:\13861.00 - Gary Matzner Park Design - Village of Pinecrest\Engineering\Cad\13861.00-CM-XXX.dwg