SHOP DRAWING/ SUBMITTAL REVIEW

☑ REVIEWED NO EXCEPTIONS TAKEN

☐ REVIEWED WITH CHANGES NOTED

SUBMITTAL WAS REVIEWED FOR DESIGN CONFORMITY AND GENERAL CONFORMANCE TO CONTRACT DOCUMENTS ONLY.

SUBMITTAL NO.: _____

REVIEWED BY: _____ DATE: 8-7-26

BALLI-TRAUTMAN ARCHITECTS LLC

David Scott Trautman, AIA, RA, LEED AP

MIAMI-DADE COUNTY
PRODUCT CONTROL SECTION
11805 SW 26 Street, Room 208
Miami, Florida 33175-2474
T (786) 315-2590 F (786) 315-2599
www.miamidade.gov/economy

DEPARTMENT OF REGULATORY AND ECONOMIC RESOURCES (RER)
BOARD AND CODE ADMINISTRATION DIVISION

NOTICE OF ACCEPTANCE (NOA)

E.S. Windows, LLC
3550 NW 49th Street
Miami, FL 33142

SCOPE:

This NOA is being issued under the applicable rules and regulations governing the use of construction materials. The documentation submitted has been reviewed and accepted by Miami–Dade County RER–Product Control Section to be used in Miami–Dade County and other areas where allowed by the Authority Having Jurisdiction (AHJ).

This NOA shall not be valid after the expiration date stated below. The Miami–Dade County Product Control Section (In Miami–Dade County) and/ or the AHJ (in areas other than Miami–Dade County) reserve the right to have this product or material tested for quality assurance purposes. If this product or material fails to perform in the accepted manner, the manufacturer will incur the expense of such testing and the AHJ may immediately revoke, modify, or suspend the use of such product or material within their jurisdiction. RER reserves the right to revoke this acceptance if it is determined by Miami–Dade County Product Control Section that this product or material fails to meet the requirements of the applicable building code.

This product is approved as described herein and has been designed to comply with the Florida Building Code, including the High Velocity Hurricane Zone.

DESCRIPTION: Clipped, Extruded Aluminum Tube Mullion – L.M.I.

APPROVAL DOCUMENT: Drawing No. **M04-04**, titled "Aluminum Tube Mullions", sheets 1 through 9 of 9 and 9.1, dated 04/26/04, with revision **K** dated 06/27/25, prepared by Al-Farooq Corporation, signed and sealed by Jalal Farooq, P.E., bearing the Miami-Dade County Product Control Revision stamp with the Notice of Acceptance number and expiration date by the Miami-Dade County Product Control Section.

MISSILE IMPACT RATING: Large and Small Missile Impact Resistant

LABELING: Each unit shall bear a permanent label with the manufacturer's name or logo, **Barranquilla**, **Colombia**, model/series, and following statement: "Miami–Dade County Product Control Approved", unless otherwise noted herein.

RENEWAL of this NOA shall be considered after a renewal application has been filed and there has been no change in the applicable building code negatively affecting the performance of this product.

TERMINATION of this NOA will occur after the expiration date or if there has been a revision or change in the materials, use, and/ or manufacture of the product or process. Misuse of this NOA as an endorsement of any product, for sales, advertising or any other purposes shall automatically terminate this NOA. Failure to comply with any section of this NOA shall be cause for termination and removal of NOA.

ADVERTISEMENT: The NOA number preceded by the words Miami–Dade County, Florida, and followed by the expiration date may be displayed in advertising literature. If any portion of the NOA is displayed, then it shall be done in its entirety.

INSPECTION: A copy of this entire NOA shall be provided to the user by the manufacturer or its distributors and shall be available for inspection at the job site at the request of the Building Official.

This NOA **revises NOA No. 24-0312.06** and consists of this page 1 and evidence pages E-1, E-2 and E-3, as well as approval document mentioned above.

The submitted documentation was reviewed by **Manuel Perez, P.E.**

MIAMI-DADE COUNTY APPROVED

9/11/25

NOA No. 25-0825.02
Expiration Date: September 16, 2029
Approval Date: September 18, 2025

E.S. Windows, LLC

NOTICE OF ACCEPTANCE: EVIDENCE SUBMITTED

1. EVIDENCE SUBMITTED UNDER PREVIOUS NOA's

A. DRAWINGS

1. Manufacturer's die drawings and sections.
(Submitted under NOA No. 04-0712.01)

2. Drawing No. **M04-04**, titled "Aluminum Tube Mullions", sheets 1 through 9 of 9, dated 04/26/04, with revision **J** dated 06/29/23, prepared by Al-Farooq Corporation, signed and sealed by Jalal Farooq, P.E.
(Submitted under NOA No. 23-0717.20)

B. TESTS

1. Test reports on: 1) Air Infiltration Test, per FBC, TAS 202-94
2) Uniform Static Air Pressure Test, Loading per FBC TAS 202-94
3) Water Resistance Test, per FBC, TAS 202-94
4) Large Missile Impact Test per FBC, TAS 201-94
5) Cyclic Wind Pressure Loading per FBC, TAS 203-94
6) Forced Entry Test, Type "D-A" fixed window, Grade 10, Level LV 1 per ASTM F 588-04, Side-Hinged Door Systems per AAMA 1304-02 and per FBC 2411.3.2.1, TAS 202-94

along with marked-up drawings and installation diagram of windows mulled together, prepared by Fenestration Testing Laboratory, Inc., Test Reports No. **FTL-3810**, dated 05/16/03; **FTL-3819**, dated 06/09/03 and **FTL-3820**, dated 06/09/03, all signed and sealed by Joseph Chan, P.E.
(Submitted under NOA No. 04-0712.01)

C. CALCULATIONS

1. Anchor verification calculations and structural analysis, complying with FBC 6th Edition (2017), dated 01/12/18, and updated on 11/04/20 to comply with FBC 7th Edition (2020), prepared by Al-Farooq Corporation, signed and sealed by Jalal Farooq, P.E.
(Submitted under NOA No. 20-1118.13)

D. QUALITY ASSURANCE

1. Miami-Dade Department of Regulatory and Economic Resources (RER).

E. MATERIAL CERTIFICATIONS

1. None.

Manuel Perez, P.E.
Product Control Examiner
NOA No. 25-0825.02
Expiration Date: September 16, 2029
Approval Date: September 18, 2025

NOTICE OF ACCEPTANCE: EVIDENCE SUBMITTED

1. EVIDENCE SUBMITTED UNDER PREVIOUS NOA's (CONTINUED)

F. STATEMENTS

1. Statement letter of conformance, complying with **FBC 8th Edition (2023)** and of no financial interest, dated March 7, 2024, issued by Al-Farooq Corporation, signed and sealed by Jalal Farooq, P.E.
(Submitted under NOA No. 24-0312.06)

2. Laboratory compliance letter for Test Reports No. **FTL-3810**, dated 05/16/03; **FTL-3819**, dated 06/09/03 and **FTL-3820**, dated 06/09/03, all issued by Fenestration Testing Laboratory, Inc. and all signed and sealed by Joseph C. Chan, P.E.
(Submitted under NOA No. 04-0712.01)

G. OTHERS

1. Notice of Acceptance No. **23-0717.20**, issued to E.S. Windows, LLC for their Clipped, Extruded Aluminum Tube Mullion – L.M.I., approved on 08/24/23 and expiring on 09/16/24.

Manuel Pérez, P.E.
Product Control Examiner
NOA No. 25-0825.02
Expiration Date: September 16, 2029
Approval Date: September 18, 2025

NOTICE OF ACCEPTANCE: EVIDENCE SUBMITTED

2. NEW EVIDENCE SUBMITTED

A. DRAWINGS

1. Drawing No. **M04-04**, titled "Aluminum Tube Mullions", sheets 1 through 9 of 9 and 9.1, dated 04/26/04, with revision **K** dated 06/27/25, prepared by Al-Farooq Corporation, signed and sealed by Jalal Farooq, P.E.

B. TESTS

1. None.

C. CALCULATIONS

1. Anchor verification calculations and structural analysis, complying with FBC 8th Edition (2023), dated 08/04/25, prepared by Al-Farooq Corporation, signed and sealed by Jalal Farooq, P.E.

D. QUALITY ASSURANCE

1. Miami-Dade Department of Regulatory and Economic Resources (RER)

E. MATERIAL CERTIFICATIONS

1. None.

F. STATEMENTS

1. Statement letter of conformance, complying with **FBC 8th Edition (2023)** and of no financial interest, dated July 28, 2025, issued by Al-Farooq Corporation, signed and sealed by Jalal Farooq, P.E.

G. OTHERS

1. Notice of Acceptance No. **24-0312.06**, issued to E.S. Windows, LLC for their Clipped, Extruded Aluminum Tube Mullion – L.M.I., approved on 05/09/24 and expiring on 09/16/29.

Manuel Pérez, P.E.
Product Control Examiner
NOA No. 25-0825.02
Expiration Date: September 16, 2029
Approval Date: September 18, 2025

MULLION SYSTEM IS RATED FOR LARGE & SMALL MISSILE IMPACT. AND CAN BE USED WITH ALL MIAMI–DADE COUNTY APPROVED IMPACT AND NON–IMPACT RESISTANT PRODUCTS.

RECTANGULAR ALUMINUM TUBE MULLIONS USING MULLION PROPERTIES ONLY

NOTES:

THIS PRODUCT HAS BEEN DESIGNED AND TESTED TO COMPLY WITH THE REQUIREMENTS OF THE 2023 (8TH EDITION) FLORIDA BUILDING CODE INCLUDING HIGH VELOCITY HURRICANE ZONE (HVHZ).

ALL GLAZING PRODUCTS USED WITH THESE MULLIONS MUST MEET THE APPLICABLE BUILDING CODE REQUIREMENTS I.E: WIND LOAD, WATER INFILTRATION, FORCED ENTRY RESISTANCE, SAFEGUARDS ETC.

1BY OR 2BY WOOD BUCKS & BUCK FASTENERS BY OTHERS, MUST BE DESIGNED AND INSTALLED ADEQUATELY TO TRANSFER APPLIED PRODUCT LOADS TO THE BUILDING STRUCTURE.

ANCHORS SHALL BE CORROSION RESISTANT, SPACED AS SHOWN ON DETAILS AND INSTALLED PER MANUF'S INSTRUCTIONS. SPECIFIED EMBEDMENT TO BASE MATERIAL SHALL BE BEYOND WALL DRESSING OR STUCCO.

A LOAD DURATION INCREASE IS USED IN DESIGN OF ANCHORS INTO WOOD ONLY.

ALL SHIMS TO BE HIGH IMPACT, NON–METALLIC AND NON–COMPRESSIBLE.

MATERIALS INCLUDING BUT NOT LIMITED TO STEEL/METAL SCREWS, THAT COME INTO CONTACT WITH OTHER DISSIMILAR MATERIALS SHALL MEET THE REQUIREMENTS OF THE 2023 FLORIDA BLDG. CODE & ADOPTED STANDARDS.

THIS PRODUCT APPROVAL IS GENERIC AND DOES NOT PROVIDE INFORMATION FOR A SITE SPECIFIC PROJECT, i.e. LIFE SAFETY OF THIS PRODUCT, ADEQUACY OF STRUCTURE RECEIVING THIS PRODUCT AND SEALING AROUND OPENING FOR WATER INFILTRATION RESISTANCE ETC.
CONDITIONS NOT SHOWN IN THIS DRAWING ARE TO BE ANALYZED SEPARATELY, AND TO BE REVIEWED BY BUILDING OFFICIAL.

DESIGN LOADS SHOWN ARE BASED ON 'ALLOWABLE STRESS DESIGN (ASD)'.

INSTRUCTIONS:

USE CHARTS AND GRAPHS AS FOLLOWS.

STEP 1 DETERMINE DESIGN LOAD REQUIRED PER ASCE 7 FOR PARTICULAR OPENING.

STEP 2 USE MIAMI–DADE COUNTY APPROVED GLAZING PRODUCTS MEETING ABOVE LOAD REQUIREMENTS.

STEP 3 USE CONNECTION TO MULLION AS PER PRODUCT APPROVAL.

STEP 4 USING CHARTS ON SHEET 3 SELECT MULLION SIZE WITH DESIGN RATING MORE THAN DESIGN LOAD SPECIFIED IN STEP 1 ABOVE.

STEP 5 USING ANCHOR TYPES ON SHEETS 5 THRU 9 AND ANCHOR CHARTS ON SHEET 4, SELECT ANCHOR TYPE WITH DESIGN RATING MORE THAN THE DESIGN LOADS SPECIFIED IN STEP 1 ABOVE.

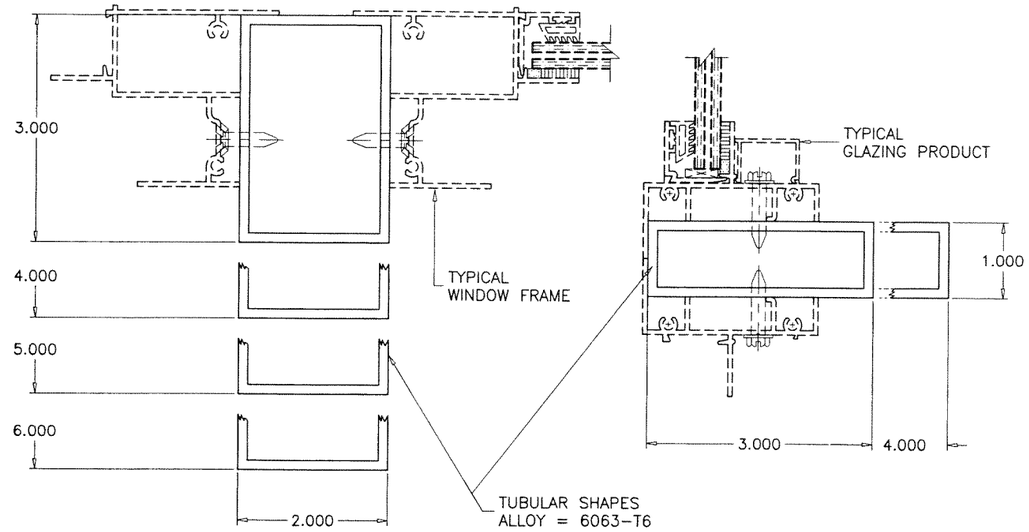

MULLIONS CONTAINING TYPICAL GLAZING PRODUCTS HORIZONTAL OR VERTICAL

SEE WINDOW OR DOOR APPROVAL FOR FASTENERS SIZES AND SPACING

PRODUCT REVISED
As complying with the Florida Building Code
NOA–No. 25-0825.02
Expiration Date: 09/16/2029
By: Manuel Perez
Miami–Dade Product Control

AUG 2 1 2025

JALAL FAROOQ
LICENSE
No. 81223
STATE OF FLORIDA
PROFESSIONAL ENGINEER

AL-FAROOQ CORPORATION
ENGINEERS & PRODUCT DEVELOPMENT
9360 SUNSET DRIVE, SUITE 220
MIAMI, FLORIDA 33173 (C.A.N. 3538)
TEL. (305) 264-8100 FAX. (305) 262-6978

MULLION\M04–04ESW

ALUMINUM TUBE MULLIONS

E.S. WINDOWS, LLC
3550 N.W. 49 STREET
MIAMI, FL. 33142
TEL. (305) 638–5151 FAX. (305) 638–5158

revisions:

no	date	by	description
G	07.14.14		UPDATED TO 2014 FBC
H	01.17.18		UPDATED TO 2017 FBC
I	11.05.20		UPDATED TO 2020 FBC
J	06.29.23		UPDATED TO 2023 FBC
K	06.27.25		GENERAL REVISION

date: 04–26–04
scale: 1/2" = 1"
dr. by: TARIQ
chk. by:

drawing no. M04–04

sheet 1 of 9

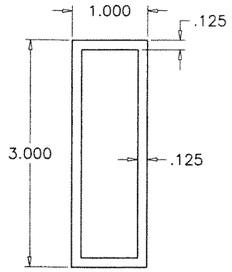

Ix = .950 IN\4
Sx = .634 IN\3

1 X 3
STD. MULLION
6063-T6

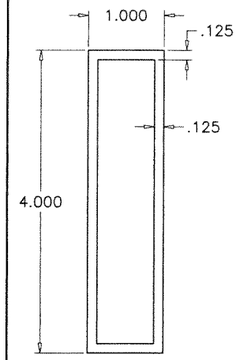

Ix = 2.037 IN\4
Sx = 1.018 IN\3

1 X 4
STD. MULLION
6063-T6

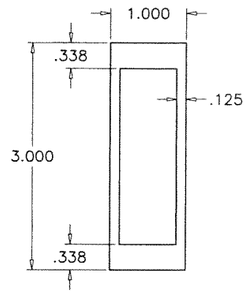

Ix = 1.466 IN\4
Sx = .977 IN\3

1 X 3
CUSTOM MULLION
6063-T6

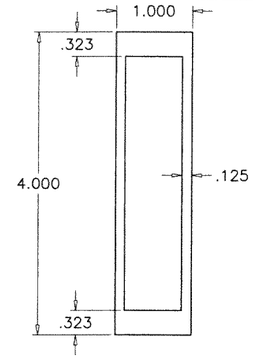

Ix = 2.975 IN\4
Sx = 1.487 IN\3

1 X 4
CUSTOM MULLION
6063-T6

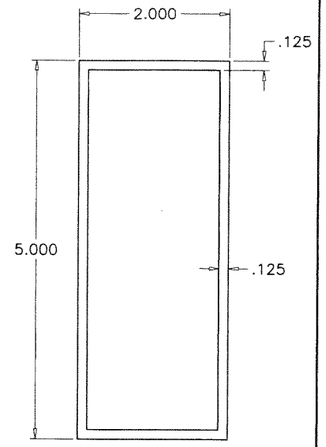

Ix = 5.204 IN\4
Sx = 2.082 IN\3

2 X 5
STD. MULLION
6063-T6

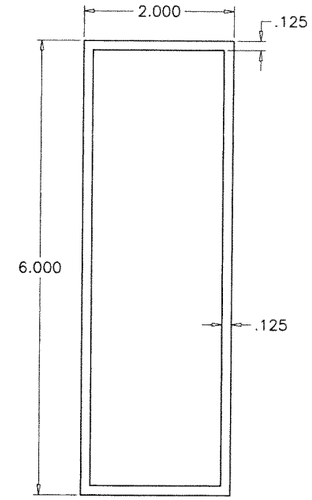

Ix = 8.276 IN\4
Sx = 2.758 IN\3

2 X 6
STD. MULLION
6063-T6

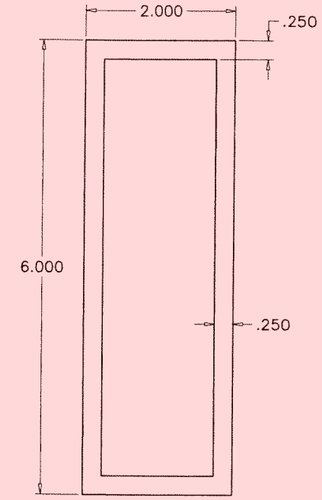

Ix = 15.203 IN\4
Sx = 5.068 IN\3

2 X 6
HEAVY MULLION
6063-T6

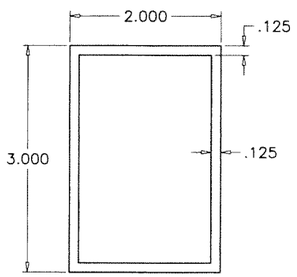

Ix = 1.467 IN\4
Sx = .978 IN\3

2 X 3
STD. MULLION
6063-T6

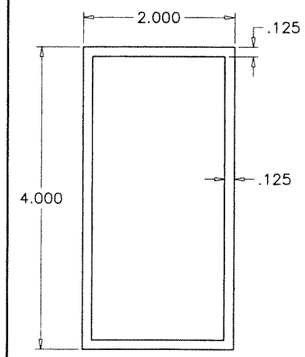

Ix = 2.976 IN\4
Sx = 1.488 IN\3

2 X 4
STD. MULLION
6063-T6

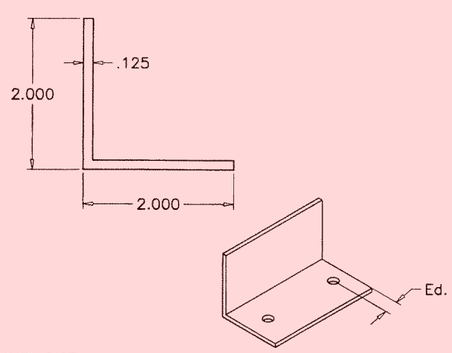

Ed = MIN. EDGE DIST.
1/2" FOR 1/4" DIA. ANCHORS
5/8" FOR 5/16" DIA. ANCHORS

ANGLE CLIP
6063-T5

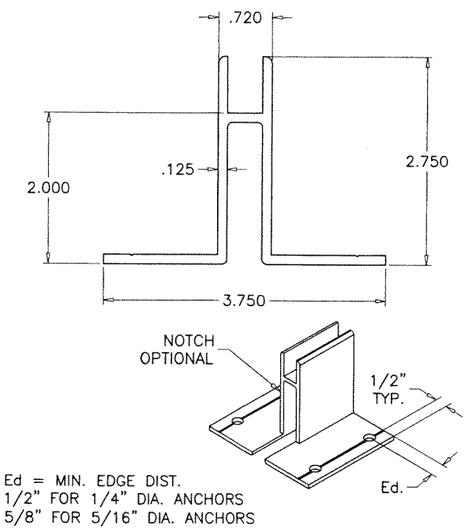

Ed = MIN. EDGE DIST.
1/2" FOR 1/4" DIA. ANCHORS
5/8" FOR 5/16" DIA. ANCHORS

MULLION CLIP
6063-T6

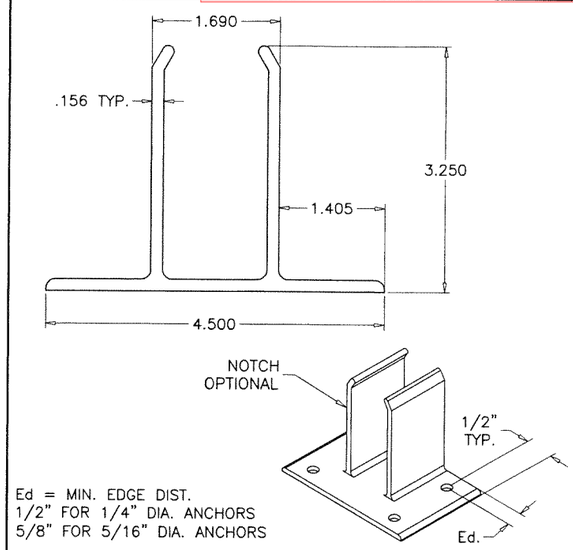

Ed = MIN. EDGE DIST.
1/2" FOR 1/4" DIA. ANCHORS
5/8" FOR 5/16" DIA. ANCHORS

MULLION CLIP
6063-T6

PRODUCT REVISED
As complying with the Florida Building Code
NOA-No. 25-0825.02
Expiration Date: 09/16/2029
By: Manuel Perez
Miami-Dade Product Control

AUG 2 1 2025

JALAL FAROOQ
LICENSE
No. 81223
STATE OF FLORIDA
PROFESSIONAL ENGINEER

AL-FAROOQ CORPORATION
ENGINEERS & PRODUCT DEVELOPMENT
9360 SUNSET DRIVE, SUITE 220
MIAMI, FLORIDA 33173 (C.A.N. 3538)
TEL. (305) 264-8100 FAX. (305) 262-6978

MULLION\M04-04ESW

ALUMINUM TUBE MULLIONS

E.S. WINDOWS, LLC
3550 N.W. 49 STREET
MIAMI, FL. 33142
TEL. (305) 638-5151 FAX. (305) 638-5158

revisions:

no	date	by	description
G	07.14.14		UPDATED TO 2014 FBC
H	01.17.18		UPDATED TO 2017 FBC
I	11.05.20		UPDATED TO 2020 FBC
J	06.29.23		NO CHANGE THIS SHEET
K	06.27.25		GENERAL REVISION

date: 04-26-04
scale: 1/2" = 1"
dr. by: TARIQ
chk. by:

drawing no.
M04-04

DESIGN LOAD CAPACITY – PSF (TUBE MULLIONS)

WINDOW DIMS. WIDTH (W)	MULL SPAN	1 X 3 STD.	1 X 4 STD.	1 X 3 CUSTOM 2 X 3 STD.	1 X 4 CUSTOM 2 X 4 STD.	2 X 5 STD.	2 X 6 STD.	2 X 6 HEAVY
19–1/8"	38–3/8"	150.0	150.0	150.0	150.0	150.0	150.0	150.0
26–1/2"		150.0	150.0	150.0	150.0	150.0	150.0	150.0
30"		150.0	150.0	150.0	150.0	150.0	150.0	150.0
37"		150.0	150.0	150.0	150.0	150.0	150.0	150.0
42"		150.0	150.0	150.0	150.0	150.0	150.0	150.0
48"		140.6	150.0	150.0	150.0	150.0	150.0	150.0
54"		124.9	150.0	150.0	150.0	150.0	150.0	150.0
60"		112.5	150.0	150.0	150.0	150.0	150.0	150.0
66"		102.2	150.0	150.0	150.0	150.0	150.0	150.0
72"		93.7	149.3	142.0	150.0	150.0	150.0	150.0
19–1/8"	50–5/8"	150.0	150.0	150.0	150.0	150.0	150.0	150.0
26–1/2"		143.9	150.0	150.0	150.0	150.0	150.0	150.0
30"		127.1	150.0	150.0	150.0	150.0	150.0	150.0
37"		103.0	150.0	150.0	150.0	150.0	150.0	150.0
42"		90.8	144.4	137.1	150.0	150.0	150.0	150.0
48"		79.4	126.4	119.9	150.0	150.0	150.0	150.0
54"		70.6	112.3	106.6	150.0	150.0	150.0	150.0
60"		63.5	101.1	95.9	144.4	150.0	150.0	150.0
66"		57.8	91.9	87.2	131.3	150.0	150.0	150.0
72"		53.0	84.2	80.0	120.4	150.0	150.0	150.0
19–1/8"	58"	150.0	150.0	150.0	150.0	150.0	150.0	150.0
26–1/2"		108.6	150.0	150.0	150.0	150.0	150.0	150.0
30"		95.9	150.0	144.6	150.0	150.0	150.0	150.0
37"		77.8	123.6	117.2	150.0	150.0	150.0	150.0
42"		68.5	108.9	103.3	150.0	150.0	150.0	150.0
48"		60.0	95.3	90.4	135.9	150.0	150.0	150.0
54"		53.3	84.7	80.3	120.8	150.0	150.0	150.0
60"		48.0	76.2	72.3	108.7	150.0	150.0	150.0
66"		43.6	69.3	65.7	98.9	150.0	150.0	150.0
72"		40.0	63.5	60.2	90.6	137.8	150.0	150.0
19–1/8"	63"	123.3	150.0	150.0	150.0	150.0	150.0	150.0
26–1/2"		89.0	145.3	137.3	150.0	150.0	150.0	150.0
30"		78.6	128.4	121.3	150.0	150.0	150.0	150.0
37"		63.7	104.1	98.3	148.3	150.0	150.0	150.0
42"		56.1	91.7	86.6	130.7	150.0	150.0	150.0
48"		49.1	80.2	75.8	114.3	150.0	150.0	150.0
54"		43.7	71.3	67.4	101.6	150.0	150.0	150.0
60"		39.3	64.2	60.6	91.5	139.7	150.0	150.0
66"		35.7	58.4	55.1	83.1	127.0	150.0	150.0
72"		32.7	53.5	50.5	76.2	116.4	150.0	150.0

DESIGN LOAD CAPACITY – PSF (TUBE MULLIONS)

WINDOW DIMS. WIDTH (W)	MULL SPAN	1 X 3 STD.	1 X 4 STD.	1 X 3 CUSTOM 2 X 3 STD.	1 X 4 CUSTOM 2 X 4 STD.	2 X 5 STD.	2 X 6 STD.	2 X 6 HEAVY
19–1/8"	74–1/4"	75.3	143.0	116.2	150.0	150.0	150.0	150.0
26–1/2"		54.3	103.2	83.9	146.6	150.0	150.0	150.0
30"		48.0	91.1	74.1	129.5	150.0	150.0	150.0
37"		38.9	73.9	60.1	105.0	150.0	150.0	150.0
42"		34.3	65.1	52.9	92.5	142.5	150.0	150.0
48"		30.0	57.0	46.3	81.0	124.7	150.0	150.0
54"		26.7	50.6	41.2	72.0	110.8	146.2	150.0
60"		24.0	45.6	37.0	64.8	99.7	131.6	150.0
66"		21.8	41.4	33.7	58.9	90.7	119.6	150.0
72"		20.0	38.0	30.9	54.0	83.1	109.7	150.0
19–1/8"	84"	52.0	110.4	80.3	150.0	150.0	150.0	150.0
26–1/2"		37.5	79.7	57.9	113.0	150.0	150.0	150.0
30"		33.2	70.4	51.2	99.8	150.0	150.0	150.0
37"		26.9	57.1	41.5	81.0	125.6	150.0	150.0
42"		23.7	50.3	36.5	71.3	110.6	145.9	150.0
48"		20.7	44.0	32.0	62.4	96.8	127.6	150.0
54"		–	39.1	28.4	55.5	86.0	113.5	150.0
60"		–	35.2	25.6	49.9	77.4	102.1	150.0
66"		–	32.0	23.3	45.4	70.4	92.8	150.0
72"		–	29.3	21.3	41.6	64.5	85.1	150.0
19–1/8"	96"	34.8	74.7	53.8	109.1	150.0	150.0	150.0
26–1/2"		25.1	53.9	38.8	78.7	133.2	150.0	150.0
30"		22.2	47.6	34.3	69.6	117.7	150.0	150.0
37"		–	38.6	27.8	56.4	95.4	125.8	150.0
42"		–	34.0	24.5	49.7	84.1	110.8	150.0
48"		–	29.8	21.4	43.5	73.5	97.0	150.0
54"		–	26.5	–	38.6	65.4	86.2	150.0
60"		–	23.8	–	34.8	58.8	77.6	142.0
66"		–	21.6	–	31.6	53.5	70.5	129.0
72"		–	–	–	29.0	49.0	64.6	118.3
19–1/8"	108"	–	52.5	37.8	76.6	134.0	150.0	150.0
26–1/2"		–	37.9	27.3	55.3	96.7	137.7	150.0
30"		–	33.4	24.1	48.9	85.5	121.7	150.0
37"		–	27.1	–	39.6	69.3	98.7	150.0
42"		–	23.9	–	34.9	61.0	86.9	150.0
48"		–	20.9	–	30.5	53.4	76.0	139.1
54"		–	–	–	27.1	47.5	67.6	123.7
60"		–	–	–	24.4	42.7	60.8	111.3
66"		–	–	–	22.2	38.8	55.3	101.2
72"		–	–	–	20.4	35.6	50.7	92.7

DESIGN LOAD CAPACITY – PSF (TUBE MULLIONS)

WINDOW DIMS. WIDTH (W)	MULL SPAN	1 X 3 STD.	1 X 4 STD.	1 X 3 CUSTOM 2 X 3 STD.	1 X 4 CUSTOM 2 X 4 STD.	2 X 5 STD.	2 X 6 STD.	2 X 6 HEAVY
19–1/8"	120"	–	38.2	27.5	55.9	97.7	150.0	150.0
26–1/2"		–	27.6	–	40.3	70.5	110.8	150.0
30"		–	24.4	–	35.6	62.3	97.9	150.0
37"		–	–	–	28.9	50.5	79.3	145.1
42"		–	–	–	25.4	44.5	69.9	127.8
48"		–	–	–	22.3	38.9	61.2	111.9
54"		–	–	–	–	34.6	54.4	99.4
60"		–	–	–	–	31.1	48.9	89.5
66"		–	–	–	–	28.3	44.5	81.4
72"		–	–	–	–	26.0	40.8	74.6
19–1/8"	132"	–	28.7	20.7	42.0	73.4	116.8	150.0
26–1/2"		–	20.7	–	30.3	53.0	84.3	150.0
30"		–	–	–	26.8	46.8	74.4	136.7
37"		–	–	–	21.7	37.9	60.3	110.9
42"		–	–	–	–	33.4	53.2	97.7
48"		–	–	–	–	29.3	46.5	85.5
54"		–	–	–	–	26.0	41.4	76.0
60"		–	–	–	–	23.4	37.2	68.4
66"		–	–	–	–	21.3	33.8	62.1
72"		–	–	–	–	–	31.0	57.0
19–1/8"	144"	–	–	–	32.3	56.5	89.9	150.0
26–1/2"		–	–	–	23.3	40.8	64.9	119.2
30"		–	–	–	20.6	36.0	57.3	105.3
37"		–	–	–	–	29.2	46.5	85.4
42"		–	–	–	–	25.7	41.0	75.2
48"		–	–	–	–	22.5	35.8	65.8
54"		–	–	–	–	20.0	31.9	58.5
60"		–	–	–	–	–	28.7	52.7
66"		–	–	–	–	–	26.1	47.9
72"		–	–	–	–	–	23.9	43.9

ALL LOADS ARE EXT.(+)/INT.(–).

NOTE:
MULLIONS RATED IN THESE CHARTS MAY BE ORIENTED VERTICALLY OR HORIZONTALLY.
(INTERPOLATION BETWEEN WIDTHS ALLOWED)

ANCHORS TYPE 'D' AND 'E' APPLICABLE TO 4", 5" AND 6" TUBE MULLIONS.
ANCHORS TYPE 'A', 'B', 'C', 'F' AND 'G' APPLICABLE TO ALL TUBE MULLIONS.

PRODUCT REVISED
As complying with the Florida Building Code
NOA-No. 25-0825.02
Expiration Date: 09/16/2029
By: Manuel Perez
Miami-Dade Product Control

MULLIONS

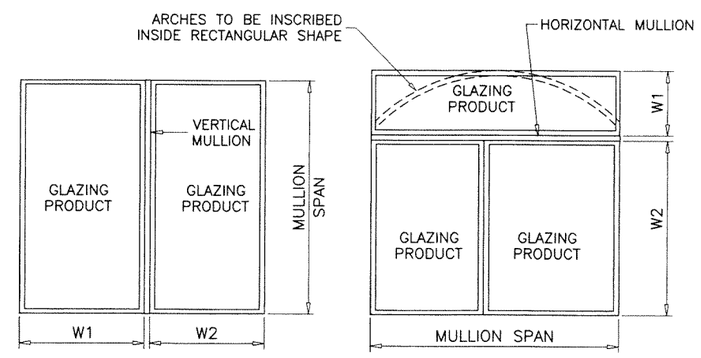

TYPICAL MULLION ARRANGEMENTS

$$\text{WIDTH (W)} = \frac{W1 + W2}{2}$$

AUG 2 1 2025

JALAL FAROOQ LICENSE No. 81223 STATE OF FLORIDA PROFESSIONAL ENGINEER

AL-FAROOQ CORPORATION
ENGINEERS & PRODUCT DEVELOPMENT
9360 SUNSET DRIVE, SUITE 220
MIAMI, FLORIDA 33173 (C.A.N. 3538)
TEL. (305) 264-8100 FAX. (305) 262-6978

MULLION\M04-04ESW

ALUMINUM TUBE MULLIONS

E.S. WINDOWS, LLC
3550 N.W. 49 STREET
MIAMI, FL. 33142
TEL. (305) 638-5151 FAX. (305) 638-5158

revisions:

no	date	by	description
G	07.14.14		UPDATED TO 2014 FBC
H	01.17.18		UPDATED TO 2017 FBC
I	11.05.20		UPDATED TO 2020 FBC
J	06.29.23		NO CHANGE THIS SHEET
K	06.27.25		GENERAL REVISION

date: 04-26-04
scale:
dr. by: TARIQ
chk. by:

drawing no. M04-04

DESIGN LOAD CAPACITY – PSF

WINDOW DIMS.		ANCHORS TYPE						
WIDTH (W)	MULL SPAN	A	B	C	D	E	F	G
19–1/8"	38–3/8"	150.0	150.0	150.0	150.0	150.0	150.0	150.0
26–1/2"		143.9	150.0	150.0	150.0	150.0	150.0	150.0
30"		127.1	150.0	150.0	150.0	150.0	145.1	150.0
37"		103.0	150.0	140.8	150.0	150.0	117.6	150.0
42"		90.8	150.0	124.0	150.0	150.0	103.6	150.0
48"		79.4	150.0	108.5	150.0	150.0	90.7	150.0
54"		70.6	141.2	96.5	150.0	150.0	80.6	147.3
60"		63.5	127.1	86.8	150.0	150.0	72.5	132.6
66"		57.8	115.5	78.9	150.0	150.0	66.0	120.5
72"		53.0	105.9	72.3	144.7	150.0	60.5	110.5
19–1/8"	50–5/8"	150.0	150.0	150.0	150.0	150.0	150.0	150.0
26–1/2"		109.1	150.0	149.0	150.0	150.0	124.5	150.0
30"		96.3	150.0	131.6	150.0	150.0	110.0	150.0
37"		78.1	150.0	106.7	150.0	150.0	89.2	150.0
42"		68.8	137.6	94.0	150.0	150.0	78.6	143.6
48"		60.2	120.4	82.3	150.0	150.0	68.7	125.6
54"		53.5	107.0	73.1	146.2	150.0	61.1	111.7
60"		48.2	96.3	65.8	131.6	150.0	55.0	100.5
66"		43.8	87.6	59.8	119.6	139.3	50.0	91.4
72"		40.1	80.3	54.8	109.7	127.7	45.8	83.8
19–1/8"	58"	131.9	150.0	150.0	150.0	150.0	150.0	150.0
26–1/2"		95.2	150.0	130.0	150.0	150.0	108.7	150.0
30"		84.1	150.0	114.9	150.0	150.0	96.0	150.0
37"		68.2	136.4	93.1	150.0	150.0	77.8	142.3
42"		60.1	120.1	82.0	150.0	150.0	68.6	125.3
48"		52.6	105.1	71.8	143.6	150.0	60.0	109.7
54"		46.7	93.4	63.8	127.6	148.6	53.3	97.5
60"		42.0	84.1	57.4	114.9	133.7	48.0	87.7
66"		38.2	76.4	52.2	104.4	121.6	43.6	79.7
72"		35.0	70.1	47.9	95.7	111.4	40.0	73.1
19–1/8"	63"	121.4	150.0	150.0	150.0	150.0	138.6	150.0
26–1/2"		87.6	150.0	119.7	150.0	150.0	100.1	150.0
30"		77.4	150.0	105.8	150.0	150.0	88.4	150.0
37"		62.8	125.5	85.7	150.0	150.0	71.7	131.0
42"		55.3	110.6	75.5	150.0	150.0	63.1	115.4
48"		48.4	96.8	66.1	132.2	150.0	55.2	101.0
54"		43.0	86.0	58.8	117.5	136.8	49.1	89.7
60"		38.7	77.4	52.9	105.8	123.1	44.2	80.8
66"		35.2	70.4	48.1	96.1	111.9	40.2	73.4
72"		32.3	64.5	44.1	88.1	102.6	36.8	67.3

DESIGN LOAD CAPACITY – PSF

		ANCHORS TYPE						
WIDTH (W)	MULL SPAN	A	B	C	D	E	F	G
19–1/8"	74–1/4"	103.0	150.0	140.8	150.0	150.0	117.6	150.0
26–1/2"		74.4	148.7	101.6	150.0	150.0	84.9	150.0
30"		65.7	131.4	89.7	150.0	150.0	75.0	137.1
37"		53.3	106.5	72.8	145.5	150.0	60.8	111.1
42"		46.9	93.8	64.1	128.2	149.2	53.6	97.9
48"		41.1	82.1	56.1	112.2	130.6	46.9	85.7
54"		36.5	73.0	49.8	99.7	116.1	41.7	76.1
60"		32.8	65.7	44.9	89.7	104.5	37.5	68.5
66"		29.9	59.7	40.8	81.6	95.0	34.1	62.3
72"		27.4	54.7	37.4	74.8	87.1	31.2	57.1
19–1/8"	84"	91.1	150.0	124.4	150.0	150.0	104.0	150.0
26–1/2"		65.7	131.5	89.8	150.0	150.0	75.0	137.1
30"		58.1	116.1	79.3	150.0	150.0	66.3	121.1
37"		47.1	94.1	64.3	128.6	149.7	53.7	98.2
42"		41.5	82.9	56.7	113.3	131.9	47.3	86.5
48"		36.3	72.6	49.6	99.1	115.4	41.4	75.7
54"		32.3	64.5	44.1	88.1	102.6	36.8	67.3
60"		29.0	58.1	39.7	79.3	92.3	33.1	60.6
66"		26.4	52.8	36.1	72.1	83.9	30.1	55.1
72"		24.2	48.4	33.0	66.1	77.0	27.6	50.5
19–1/8"	96"	79.7	150.0	108.9	150.0	150.0	91.0	150.0
26–1/2"		57.5	115.0	78.6	150.0	150.0	65.7	120.0
30"		50.8	101.6	69.4	138.8	150.0	58.0	106.0
37"		41.2	82.4	56.3	112.5	131.0	47.0	85.9
42"		36.3	72.6	49.6	99.1	115.4	41.4	75.7
48"		31.8	63.5	43.4	86.8	101.0	36.3	66.3
54"		28.2	56.4	38.6	77.1	89.8	32.2	58.9
60"		25.4	50.8	34.7	69.4	80.8	29.0	53.0
66"		23.1	46.2	31.5	63.1	73.5	26.4	48.2
72"		21.2	42.3	28.9	57.8	67.3	24.2	44.2
19–1/8"	108"	70.8	141.7	96.8	150.0	150.0	80.9	147.8
26–1/2"		51.1	102.2	69.8	139.7	150.0	58.4	106.7
30"		45.2	90.3	61.7	123.4	143.6	51.6	94.2
37"		36.6	73.2	50.0	100.0	116.5	41.8	76.4
42"		32.3	64.5	44.1	88.1	102.6	36.8	67.3
48"		28.2	56.4	38.6	77.1	89.8	32.2	58.9
54"		25.1	50.2	34.3	68.5	79.8	28.6	52.3
60"		22.6	45.2	30.8	61.7	71.8	25.8	47.1
66"		20.5	41.1	28.0	56.1	65.3	23.4	42.8
72"		–	37.6	25.7	51.4	59.9	21.5	39.3

DESIGN LOAD CAPACITY – PSF

		ANCHORS TYPE						
WIDTH (W)	MULL SPAN	A	B	C	D	E	F	G
19–1/8"	120"	63.7	127.5	87.1	150.0	150.0	72.8	133.0
26–1/2"		46.0	92.0	62.9	125.7	146.4	52.5	96.0
30"		40.6	81.3	55.5	111.0	129.3	46.4	84.8
37"		33.0	65.9	45.0	90.0	104.8	37.6	68.8
42"		29.0	58.1	39.7	79.3	92.3	33.1	60.6
48"		25.4	50.8	34.7	69.4	80.8	29.0	53.0
54"		22.6	45.2	30.8	61.7	71.8	25.8	47.1
60"		20.3	40.6	27.8	55.5	64.6	23.2	42.4
66"		–	36.9	25.2	50.5	58.8	21.1	38.5
72"		–	33.9	23.1	46.3	53.9	–	35.3
19–1/8"	132"	58.0	115.9	79.2	150.0	150.0	66.2	120.9
26–1/2"		41.8	83.7	57.1	114.3	133.0	47.8	87.3
30"		36.9	73.9	50.5	100.9	117.5	42.2	77.1
37"		30.0	59.9	40.9	81.8	95.3	34.2	62.5
42"		26.4	52.8	36.1	72.1	83.9	30.1	55.1
48"		23.1	46.2	31.5	63.1	73.5	26.4	48.2
54"		20.5	41.1	28.0	56.1	65.3	23.4	42.8
60"		–	36.9	25.2	50.5	58.8	21.1	38.5
66"		–	33.6	22.9	45.9	53.4	–	35.0
72"		–	30.8	21.0	42.1	49.0	–	32.1
19–1/8"	144"	53.1	106.2	72.6	145.2	150.0	60.7	110.8
26–1/2"		38.3	76.7	52.4	104.8	122.0	43.8	80.0
30"		33.9	67.7	46.3	92.5	107.7	38.7	70.7
37"		27.5	54.9	37.5	75.0	87.4	31.4	57.3
42"		24.2	48.4	33.0	66.1	77.0	27.6	50.5
48"		–	42.3	28.9	57.8	67.3	24.2	44.2
54"		–	37.6	25.7	51.4	59.9	21.5	39.3
60"		–	33.9	23.1	46.3	53.9	–	35.3
66"		–	30.8	21.0	42.1	49.0	–	32.1
72"		–	28.2	–	38.6	44.9	–	29.4

ALL LOADS ARE EXT.(+)/INT.(–).

NOTE:
ANY ANCHOR CONDITION SHOWN HEREIN MAY COVER LOCATIONS AT HEAD, SILL OR JAMB ENDS.

FOR ANCHORS DESCRIPTION SEE SHEETS 5 THRU 9. (INTERPOLATION BETWEEN WIDTHS OR SPANS ALLOWED)

ANCHORS TYPE 'D' AND 'E' APPLICABLE TO 4", 5" AND 6" TUBE MULLIONS.
ANCHORS TYPE 'A', 'B', 'C', 'F' AND 'G' APPLICABLE TO ALL TUBE MULLIONS.

PRODUCT REVISED
As complying with the Florida Building Code
NOA-No. 25-0825.02
Expiration Date: 09/16/2029
By: Manuel Perez
Miami-Dade Product Control

ANCHORS

TYPICAL MULLION ARRANGEMENTS

$$\text{WIDTH (W)} = \frac{W1 + W2}{2}$$

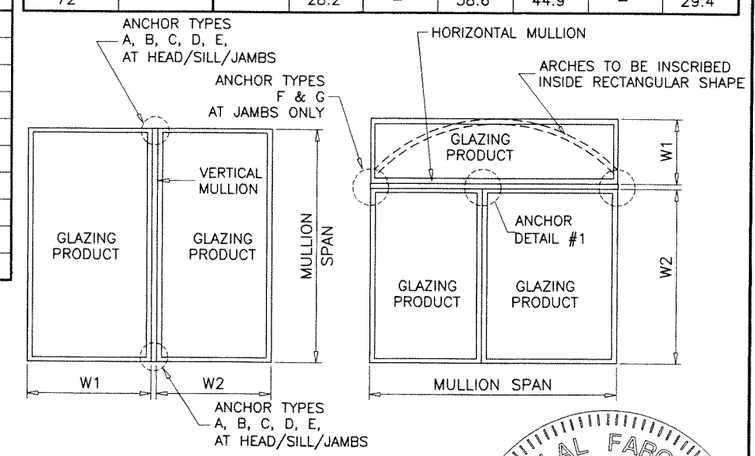

AUG 2 1 2025

JALAL FAROOQ
LICENSE
No. 81223
STATE OF FLORIDA
PROFESSIONAL ENGINEER

AL-FAROOQ CORPORATION
ENGINEERS & PRODUCT DEVELOPMENT
9360 SUNSET DRIVE, SUITE 220
MIAMI, FLORIDA 33173 (C.A.N. 3538)
TEL. (305) 264-8100 FAX. (305) 262-6978

MULLION\M04–04ESW

ALUMINUM TUBE MULLIONS

E.S. WINDOWS, LLC
3550 N.W. 49 STREET
MIAMI, FL. 33142
TEL. (305) 638-5151 FAX. (305) 638-5158

revisions:

no	date	by	description
G	07.14.14		UPDATED TO 2014 FBC
H	01.17.18		UPDATED TO 2017 FBC
I	11.05.20		UPDATED TO 2020 FBC
J	06.29.23		NO CHANGE THIS SHEET
K	06.27.25		GENERAL REVISION

date: 04–26–04
scale:
dr. by: TARIQ
chk. by:

drawing no. M04–04

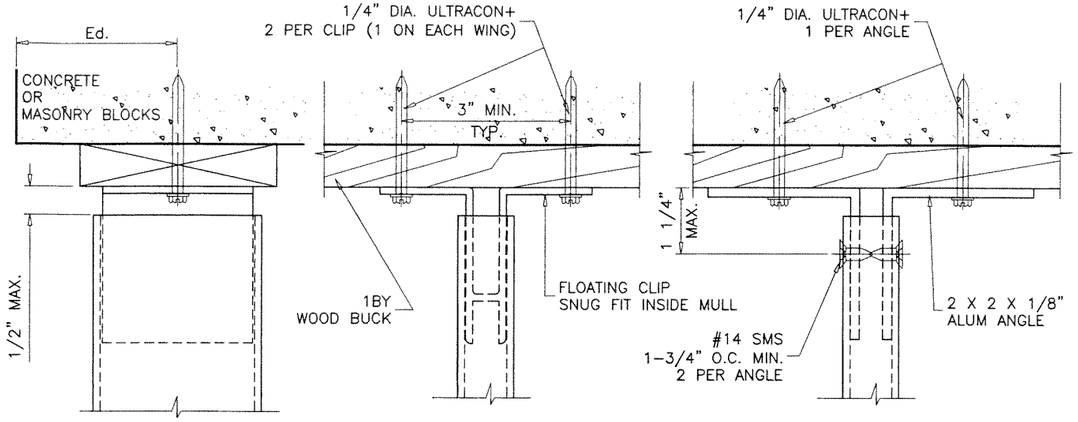

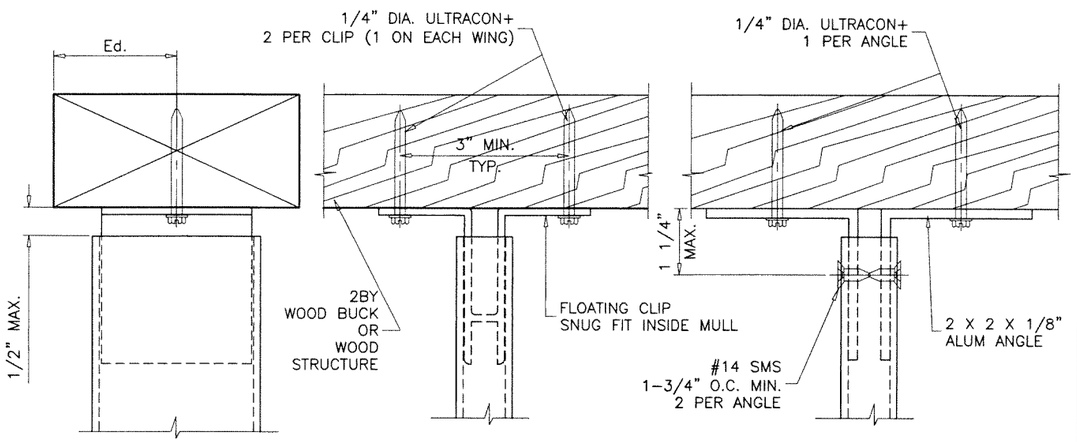

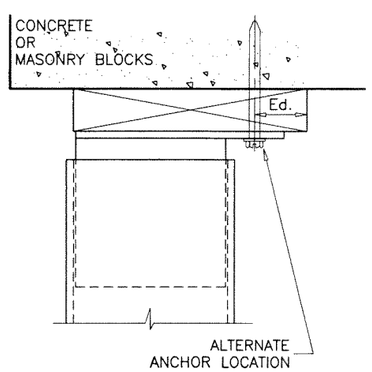

ANCHORS TYPE 'A'

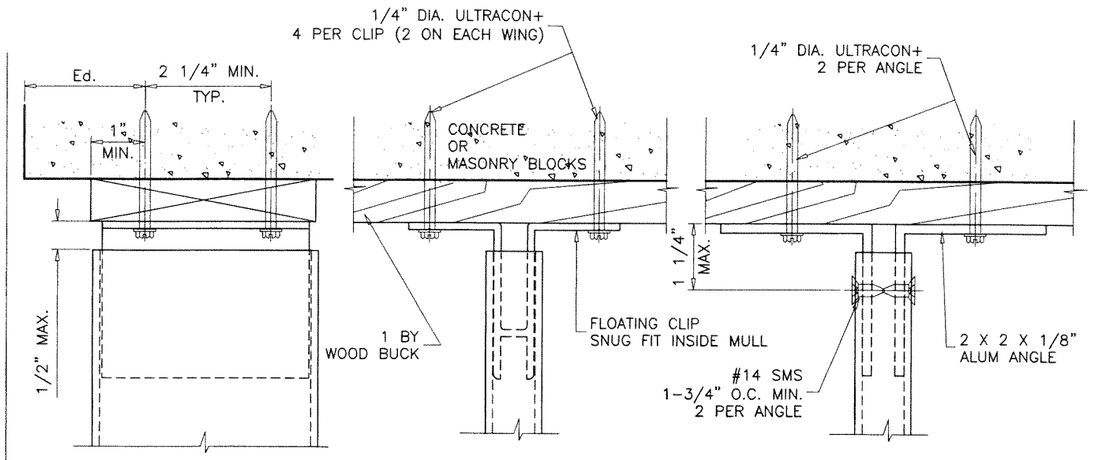

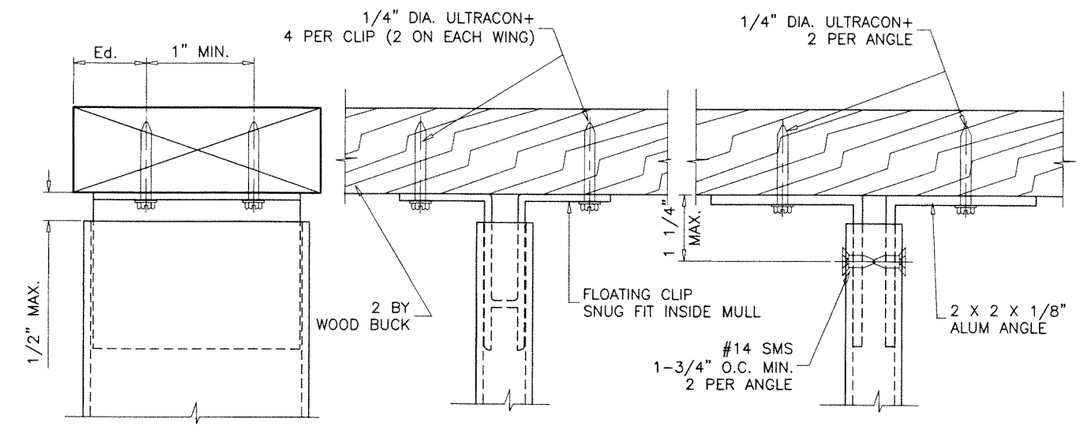

ANCHORS TYPE 'B'

1/4" DIA. ULTRACON+ BY 'DEWALT' (Fu=164 KSI, Fy=148 KSI) ULTRACON+ MAY BE HEX OR FLAT HEAD		
SUBSTRATE	Ed. = MIN. EDGE DIST.	MIN. EMBEDMENT
WOOD	1"	1-1/2"
CONCRETE	2-1/2"	1-3/4"
BLOCK	2-1/2"	1-1/4"

WOOD = 2BY WOOD BUCKS OR WOOD STRUCTURE S.G. = 0.55 MIN.
CONCRETE = f'c = 3000 PSI MIN.
C-90 HOLLOW/FILLED BLOCKS f'm = 2000 PSI MIN.

ALL CLIPS AND ANGLES TO FIT SNUG INTO TUBE MULLIONS.
CLIPS OR ANGLES CONNECTED DIRECTLY TO CONCRETE/BLOCKS TO BE PROTECTED WITH ALKALI-RESISTANT COATINGS, SUCH AS BITUMINOUS PAINT OR WATER-WHITE METHACRYLATE LACQUER.

PRODUCT REVISED
As complying with the Florida Building Code
NOA-No. 25-0825.02
Expiration Date: 09/16/2029
By: Manuel Perez
Miami-Dade Product Control
AUG 2 1 2025

JALAL FAROOQ
LICENSE
No. 81223
STATE OF FLORIDA
PROFESSIONAL ENGINEER

AL-FAROOQ CORPORATION
ENGINEERS & PRODUCT DEVELOPMENT
9360 SUNSET DRIVE, SUITE 220
MIAMI, FLORIDA 33173
(C.A.N. 3538)
TEL. (305) 264-8100 FAX. (305) 262-6978

MULLION\M04-04ESW

ALUMINUM TUBE MULLIONS

E.S. WINDOWS, LLC
3550 N.W. 49 STREET
MIAMI, FL. 33142
TEL. (305) 638-5151 FAX. (305) 638-5158

revisions:

no	date	by	description
G	07.14.14		UPDATED TO 2014 FBC
H	01.17.18		UPDATED TO 2017 FBC
I	11.05.20		UPDATED TO 2020 FBC
J	06.29.23		NO CHANGE THIS SHEET
K	06.27.25		GENERAL REVISION

date: 04-26-04
scale: 3/8" = 1"
dr. by: TARIQ
chk. by:

drawing no.
M04-04

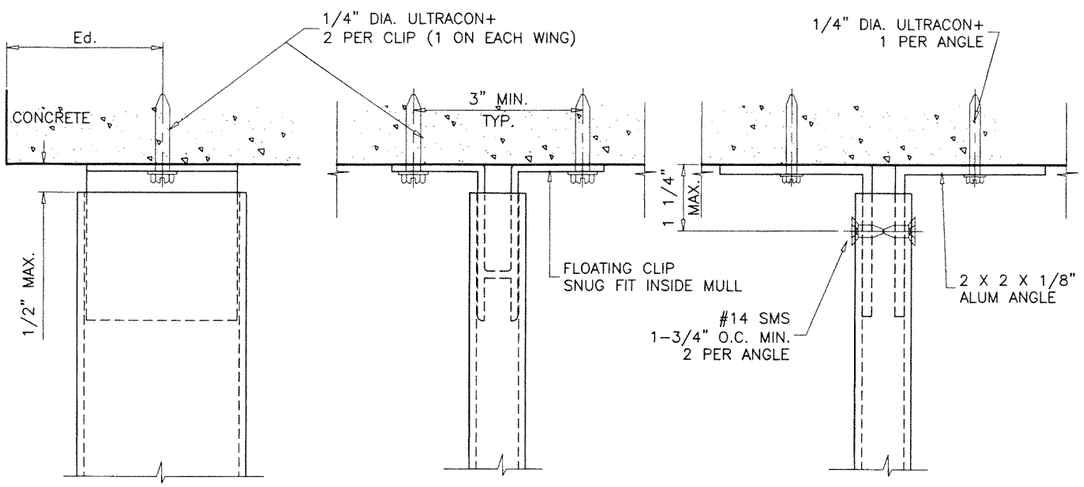

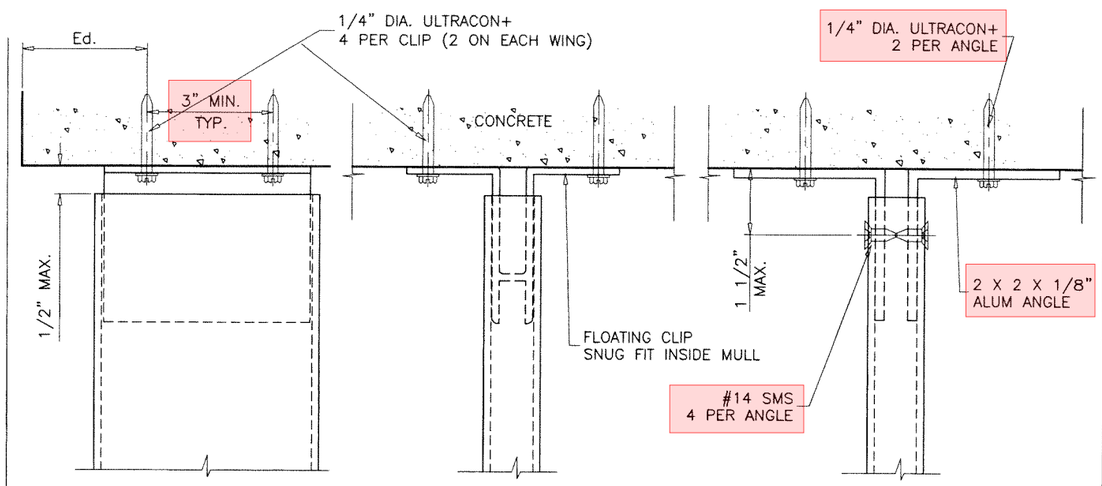

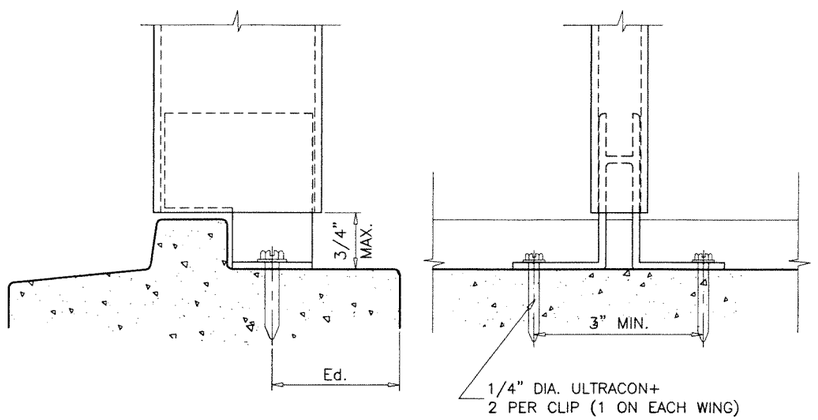

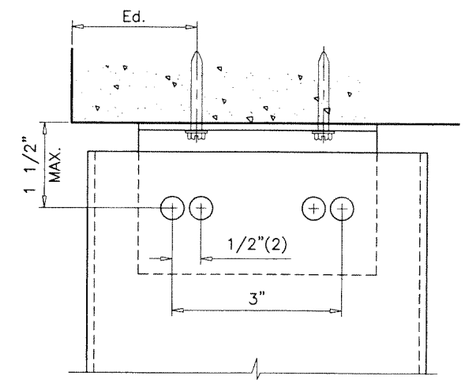

LOCATION OF SCREWS CONNECTING ANGLES TO TUBES

ANCHORS TYPE 'D'

APPLICABLE FOR 4", 5" AND 6" TUBE MULLIONS

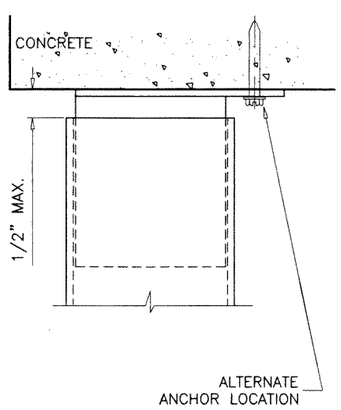

ANCHORS TYPE 'C'

1/4" DIA. ULTRACON+ BY 'DEWALT' (Fu=164 KSI, Fy=148 KSI) ULTRACON+ MAY BE HEX OR FLAT HEAD		
SUBSTRATE	Ed. = MIN. EDGE DIST.	MIN. EMBEDMENT
CONCRETE	2-1/2"	1-3/4"

CONCRETE = f'c = 3000 PSI MIN.

ALL CLIPS AND ANGLES TO FIT SNUG INTO TUBE MULLIONS (EXCEPT AS NOTED). CLIPS OR ANGLES CONNECTED DIRECTLY TO CONCRETE TO BE PROTECTED WITH ALKALI-RESISTANT COATINGS, SUCH AS BITUMINOUS PAINT OR WATER-WHITE METHACRYLATE LACQUER.

PRODUCT REVISED
As complying with the Florida Building Code
NOA-No. 25-0825.02
Expiration Date: 09/16/2029
By: Manuel Perez
Miami-Dade Product Control
AUG 21 2025

JALAL FAROOQ
LICENSE
No. 81223
STATE OF FLORIDA
PROFESSIONAL ENGINEER

AL-FAROOQ CORPORATION
ENGINEERS & PRODUCT DEVELOPMENT
9360 SUNSET DRIVE, SUITE 220
MIAMI, FLORIDA 33173 (C.A.N. 3538)
TEL. (305) 264-8100 FAX. (305) 262-6978

MULLION\M04-04ESW

ALUMINUM TUBE MULLIONS

E.S. WINDOWS, LLC
3550 N.W. 49 STREET
MIAMI, FL. 33142
TEL. (305) 638-5151 FAX. (305) 638-5158

revisions:

no	date	by	description
G	07.14.14		UPDATED TO 2014 FBC
H	01.17.18		UPDATED TO 2017 FBC
I	11.05.20		UPDATED TO 2020 FBC
J	06.29.23		NO CHANGE THIS SHEET
K	06.27.25		GENERAL REVISION

date: 04-26-04
scale: 3/8" = 1"
dr. by: TARIQ
chk. by:

drawing no. M04-04

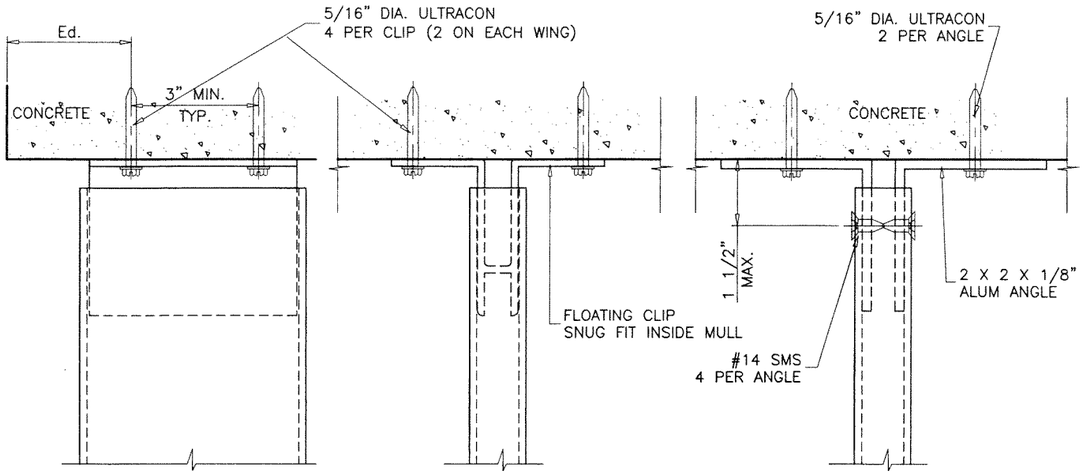

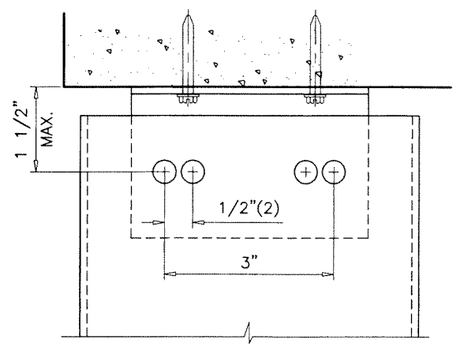

LOCATION OF SCREWS CONNECTING
ANGLES TO TUBES

ANCHORS TYPE 'E'

APPLICABLE FOR 4", 5" AND 6" TUBE MULLIONS

5/16" DIA. ULTRACON BY 'DEWALT' (Fu=177 KSI, Fy=155 KSI) ULTRACON MAY BE HEX OR FLAT HEAD		
SUBSTRATE	Ed. = MIN. EDGE DIST.	MIN. EMBEDMENT
CONCRETE	3-1/8"	2"

CONCRETE = f'c = 3000 PSI MIN.

ALL CLIPS AND ANGLES TO FIT SNUG INTO TUBE MULLIONS (EXCEPT AS NOTED). CLIPS OR ANGLES CONNECTED DIRECTLY TO CONCRETE TO BE PROTECTED WITH ALKALI-RESISTANT COATINGS, SUCH AS BITUMINOUS PAINT OR WATER-WHITE METHACRYLATE LACQUER.

PRODUCT REVISED
As complying with the Florida Building Code
NOA-No. 25-0825.02
Expiration Date: 09/16/2029
By: Manuel Perez
Miami-Dade Product Control
AUG 2 1 2025

JALAL FAROOQ
LICENSE
No. 81223
STATE OF FLORIDA
PROFESSIONAL ENGINEER

AL-FAROOQ CORPORATION
ENGINEERS & PRODUCT DEVELOPMENT
9360 SUNSET DRIVE, SUITE 220
MIAMI, FLORIDA 33173 (C.A.N. 3538)
TEL. (305) 264-8100 FAX. (305) 262-6978

MULLION\M04-04ESW

ALUMINUM TUBE MULLIONS

E.S. WINDOWS, LLC
3550 N.W. 49 STREET
MIAMI, FL. 33142
TEL. (305) 638-5151 FAX. (305) 638-5158

revisions:

no	date	by	description
G	07.14.14		UPDATED TO 2014 FBC
H	01.17.18		UPDATED TO 2017 FBC
I	11.05.20		UPDATED TO 2020 FBC
J	06.29.23		NO CHANGE THIS SHEET
K	06.27.25		GENERAL REVISION

date: 04-26-04
scale: 3/8" = 1"
dr. by: TARIQ
chk. by:

drawing no.
M04-04

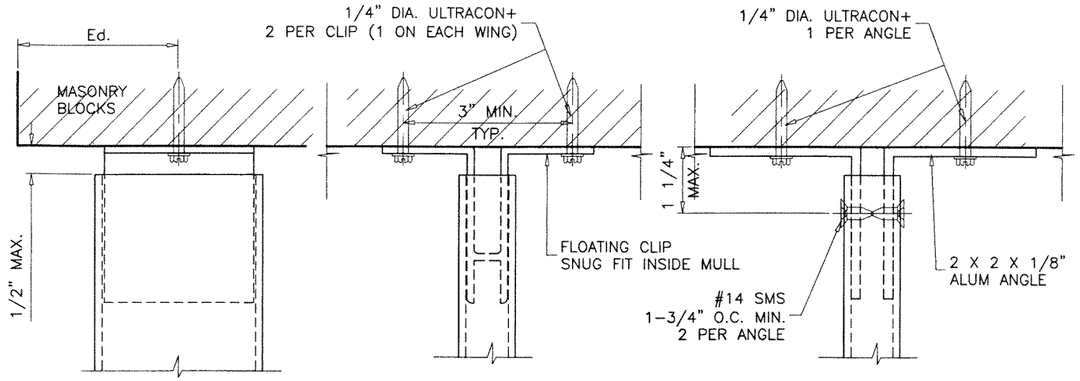

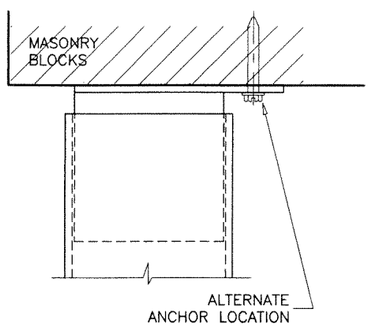

ANCHORS TYPE 'F'

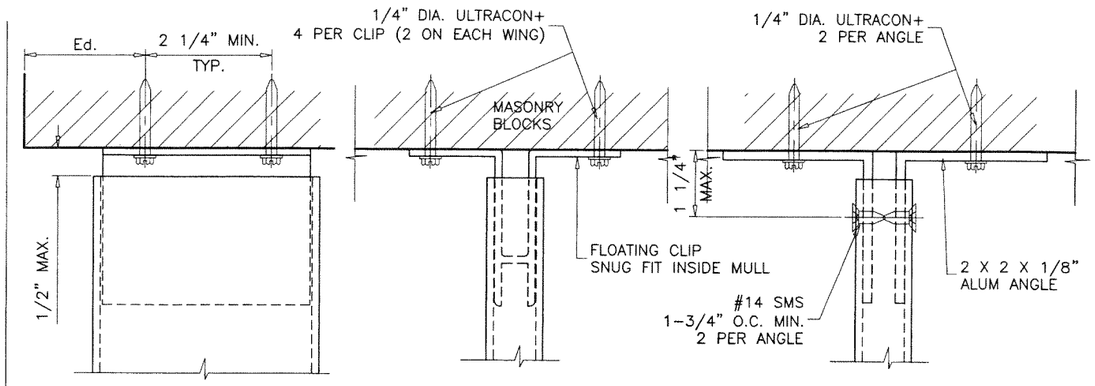

ANCHORS TYPE 'G'

1/4" DIA. ULTRACON+ BY 'DEWALT' (Fu=164 KSI, Fy=148 KSI) ULTRACON+ MAY BE HEX OR FLAT HEAD		
SUBSTRATE	Ed. = MIN. EDGE DIST.	MIN. EMBEDMENT
BLOCKS	2-1/2"	1-1/4"

C-90 HOLLOW/FILLED BLOCK f'm = 2000 PSI MIN.

ALL CLIPS AND ANGLES TO FIT SNUG INTO TUBE MULLIONS.
CLIPS OR ANGLES CONNECTED DIRECTLY TO BLOCKS TO BE PROTECTED WITH ALKALI-RESISTANT COATINGS, SUCH AS BITUMINOUS PAINT OR WATER-WHITE METHACRYLATE LACQUER.

PRODUCT REVISED
As complying with the Florida Building Code
NOA-No. 25-0825.02
Expiration Date: 09/16/2029
By: Manuel Perez
Miami-Dade Product Control

AUG 2 1 2025

JALAL FAROOQ
LICENSE
No. 81223
STATE OF FLORIDA
PROFESSIONAL ENGINEER

AL-FAROOQ CORPORATION
ENGINEERS & PRODUCT DEVELOPMENT
9360 SUNSET DRIVE, SUITE 220
MIAMI, FLORIDA 33173 (C.A.N. 3538)
TEL. (305) 264-8100 FAX. (305) 262-6978

MULLION\M04-04ESW

ALUMINUM TUBE MULLIONS

E.S. WINDOWS, LLC
3550 N.W. 49 STREET
MIAMI, FL. 33142
TEL. (305) 638-5151 FAX. (305) 638-5158

revisions:

no	date	by	description
G	07.14.14		UPDATED TO 2014 FBC
H	01.17.18		UPDATED TO 2017 FBC
I	11.05.20		UPDATED TO 2020 FBC
J	06.29.23		NO CHANGE THIS SHEET
K	06.27.25		GENERAL REVISION

date: 04-26-04
scale: 3/8" = 1"
dr. by: TARIQ
chk. by:

drawing no. M04-04

DESIGN LOAD CAPACITY - PSF					
WINDOW DIMS.		ANCHORS QUANTITY			
WIDTH (W)	MULL SPAN	2	3	4	6
19-1/8"	38-3/8"	150.0	150.0	150.0	150.0
26-1/2"		150.0	150.0	150.0	150.0
30"		150.0	150.0	150.0	150.0
37"		150.0	150.0	150.0	150.0
42"		136.9	150.0	150.0	150.0
48"		119.8	150.0	150.0	150.0
54"		106.5	150.0	150.0	150.0
60"		95.8	143.7	150.0	150.0
66"		87.1	130.7	150.0	150.0
72"		79.8	119.8	150.0	150.0
19-1/8"	50-5/8"	150.0	150.0	150.0	150.0
26-1/2"		150.0	150.0	150.0	150.0
30"		145.3	150.0	150.0	150.0
37"		117.8	150.0	150.0	150.0
42"		103.8	150.0	150.0	150.0
48"		90.8	136.2	150.0	150.0
54"		80.7	121.0	150.0	150.0
60"		72.6	108.9	145.3	150.0
66"		66.0	99.0	132.1	150.0
72"		60.5	90.8	121.0	150.0
19-1/8"	58"	150.0	150.0	150.0	150.0
26-1/2"		143.5	150.0	150.0	150.0
30"		126.8	150.0	150.0	150.0
37"		102.8	150.0	150.0	150.0
42"		90.6	135.8	150.0	150.0
48"		79.2	118.9	150.0	150.0
54"		70.4	105.7	140.9	150.0
60"		63.4	95.1	126.8	150.0
66"		57.6	86.4	115.3	150.0
72"		52.8	79.2	105.7	150.0
19-1/8"	63"	150.0	150.0	150.0	150.0
26-1/2"		132.1	150.0	150.0	150.0
30"		116.7	150.0	150.0	150.0
37"		94.6	142.0	150.0	150.0
42"		83.4	125.1	150.0	150.0
48"		73.0	109.4	145.9	150.0
54"		64.8	97.3	129.7	150.0
60"		58.4	87.5	116.7	150.0
66"		53.1	79.6	106.1	150.0
72"		48.6	73.0	97.3	145.9
19-1/8"	74-1/4"	150.0	150.0	150.0	150.0
26-1/2"		112.1	150.0	150.0	150.0
30"		99.0	148.6	150.0	150.0
37"		80.3	120.5	150.0	150.0
42"		70.7	106.1	141.5	150.0
48"		61.9	92.8	123.8	150.0
54"		55.0	82.5	110.0	150.0
60"		49.5	74.3	99.0	148.6
66"		45.0	67.5	90.0	135.1
72"		41.3	61.9	82.5	123.8

DESIGN LOAD CAPACITY - PSF					
WINDOW DIMS.		ANCHORS QUANTITY			
WIDTH (W)	MULL SPAN	2	3	4	6
19-1/8"	84"	137.3	150.0	150.0	150.0
26-1/2"		99.1	148.7	150.0	150.0
30"		87.5	131.3	150.0	150.0
37"		71.0	106.5	142.0	150.0
42"		62.5	93.8	125.1	150.0
48"		54.7	82.1	109.4	150.0
54"		48.6	73.0	97.3	145.9
60"		43.8	65.7	87.5	131.3
66"		39.8	59.7	79.6	119.4
72"		36.5	54.7	73.0	109.4
19-1/8"	96"	120.2	150.0	150.0	150.0
26-1/2"		86.7	130.1	150.0	150.0
30"		76.6	114.9	150.0	150.0
37"		62.1	93.2	124.2	150.0
42"		54.7	82.1	109.4	150.0
48"		47.9	71.8	95.8	143.6
54"		42.6	63.8	85.1	127.7
60"		38.3	57.5	76.6	114.9
66"		34.8	52.2	69.6	104.5
72"		31.9	47.9	63.8	95.8
19-1/8"	108"	106.8	150.0	150.0	150.0
26-1/2"		77.1	115.6	150.0	150.0
30"		68.1	102.1	136.2	150.0
37"		55.2	82.8	110.4	150.0
42"		48.6	73.0	97.3	145.9
48"		42.6	63.8	85.1	127.7
54"		37.8	56.7	75.7	113.5
60"		34.0	51.1	68.1	102.1
66"		30.9	46.4	61.9	92.8
72"		28.4	42.6	56.7	85.1
19-1/8"	120"	96.1	144.2	150.0	150.0
26-1/2"		69.4	104.1	138.7	150.0
30"		61.3	91.9	122.6	150.0
37"		49.7	74.5	99.4	149.1
42"		43.8	65.7	87.5	131.3
48"		38.3	57.5	76.6	114.9
54"		34.0	51.1	68.1	102.1
60"		30.6	46.0	61.3	91.9
66"		27.9	41.8	55.7	83.6
72"		25.5	38.3	51.1	76.6
19-1/8"	132"	87.4	131.1	150.0	150.0
26-1/2"		63.1	94.6	126.1	150.0
30"		55.7	83.6	111.4	150.0
37"		45.2	67.8	90.3	135.5
42"		39.8	59.7	79.6	119.4
48"		34.8	52.2	69.6	104.5
54"		30.9	46.4	61.9	92.8
60"		27.9	41.8	55.7	83.6
66"		25.3	38.0	50.6	76.0
72"		23.2	34.8	46.4	69.6

DESIGN LOAD CAPACITY - PSF					
WINDOW DIMS.		ANCHORS QUANTITY			
WIDTH (W)	MULL SPAN	2	3	4	6
19-1/8"	144"	80.1	120.2	150.0	150.0
26-1/2"		57.8	86.7	115.6	150.0
30"		51.1	76.6	102.1	150.0
37"		41.4	62.1	82.8	124.2
42"		36.5	54.7	73.0	109.4
48"		31.9	47.9	63.8	95.8
54"		28.4	42.6	56.7	85.1
60"		25.5	38.3	51.1	76.6
66"		23.2	34.8	46.4	69.6
72"		21.3	31.9	42.6	63.8

ALL LOADS ARE EXT.(+)/INT.(-).

SEE SHEET 9.1 FOR CONNECTION DETAILS

ANCHORS

PRODUCT REVISED
As complying with the Florida Building Code
NOA-No. 25-0825.02
Expiration Date: 09/16/2029
By: Manuel Perez
Miami-Dade Product Control

AUG 2 1 2025

JALAL FAROOQ LICENSE No. 81223 STATE OF FLORIDA PROFESSIONAL ENGINEER

AL-FAROOQ CORPORATION
ENGINEERS & PRODUCT DEVELOPMENT
9360 SUNSET DRIVE, SUITE 220
MIAMI, FLORIDA 33173 (C.A.N. 3538)
TEL. (305) 264-8100 FAX. (305) 262-6978

MULLION\M04-04ESW

ALUMINUM TUBE MULLIONS

E.S. WINDOWS, LLC
3550 N.W. 49 STREET
MIAMI, FL. 33142
TEL. (305) 638-5151 FAX. (305) 638-5158

revisions:

no	date	by	description
G	07.14.14		UPDATED TO 2014 FBC
H	01.17.18		UPDATED TO 2017 FBC
I	11.05.20		UPDATED TO 2020 FBC
J	06.29.23		NO CHANGE THIS SHEET
K	06.27.25		GENERAL REVISION

date: 04-26-04
scale: 3/8" = 1"
dr. by: TARIQ
chk. by:

drawing no. M04-04

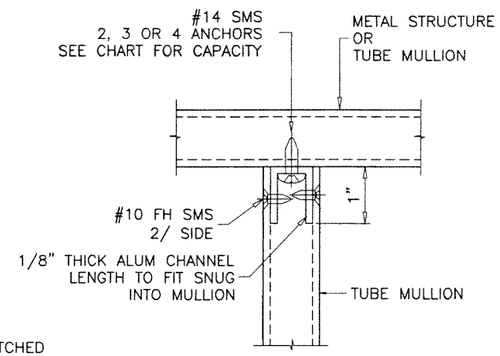

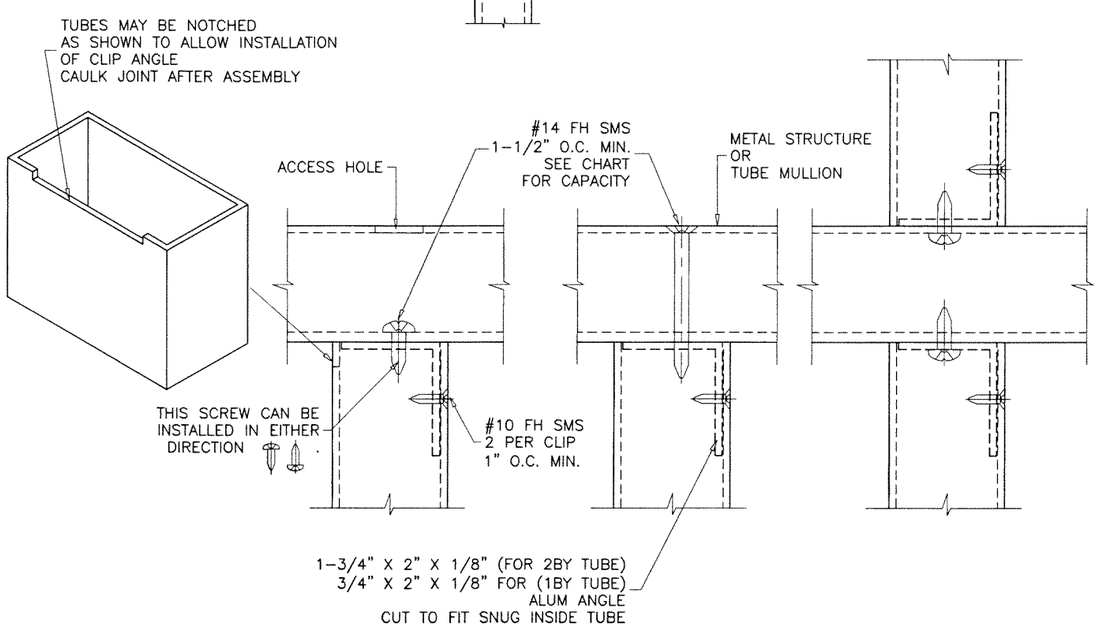

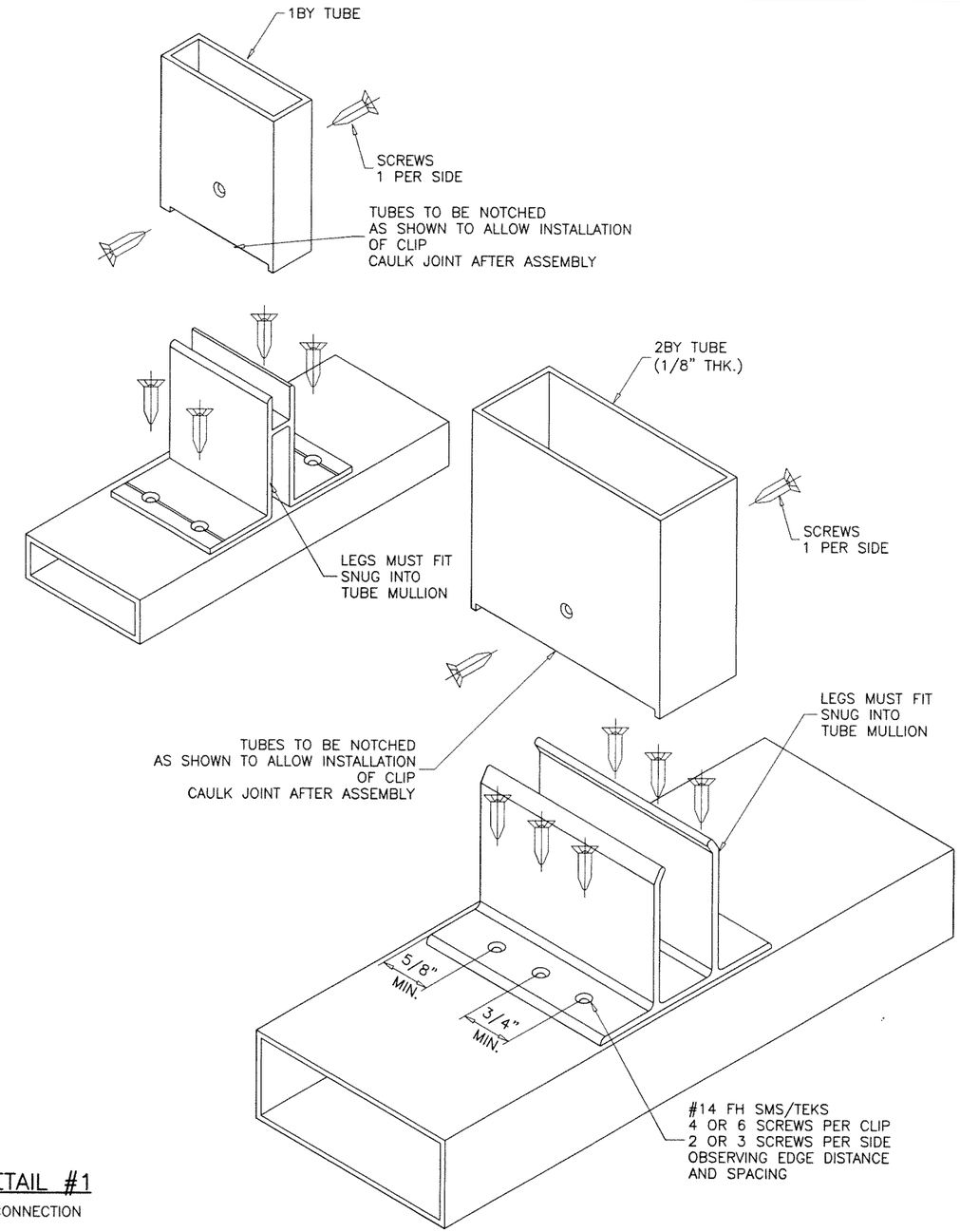

ANCHORS DETAIL #1

METAL TO METAL CONNECTION

#14 SMS/TEKS		
SUBSTRATE	Ed. = MIN. EDGE DIST.	MIN. CL TO CL SPACING
METAL	5/8"	1/2"

METAL = 1/8" MIN. THK. STEEL Fy = 36 KSI MIN.
1/8" MIN. THK. ALUMINUM (6063-T6 MIN.)

PRODUCT REVISED
As complying with the Florida Building Code
NOA-No. 25-0825.02
Expiration Date: 09/16/2029
By: Manuel Perez
Miami-Dade Product Control
AUG 2 1 2025

JALAL FAROOQ
LICENSE
No. 81223
STATE OF FLORIDA
PROFESSIONAL ENGINEER

AL-FAROOQ CORPORATION
ENGINEERS & PRODUCT DEVELOPMENT
9360 SUNSET DRIVE, SUITE 220
MIAMI, FLORIDA 33173 (C.A.N. 3538)
TEL. (305) 264-8100 FAX. (305) 262-6978

MULLION\M04-04ESW

ALUMINUM TUBE MULLIONS

E.S. WINDOWS, LLC
3550 N.W. 49 STREET
MIAMI, FL. 33142
TEL. (305) 638-5151 FAX. (305) 638-5158

revisions:

no	date	by	description
G	07.14.14		UPDATED TO 2014 FBC
H	01.17.18		UPDATED TO 2017 FBC
I	11.05.20		UPDATED TO 2020 FBC
J	06.29.23		NO CHANGE THIS SHEET
K	06.27.25		GENERAL REVISION

date: 04-26-04
scale: 3/8" = 1"
dr. by: TARIQ
chk. by:

drawing no.
M04-04

sheet 9.1 of 9