GENERAL NOTES AND SPECIFICATIONS:

1. DOUBLE & SINGLE SERIES 8080 & 4080 EMBOSSED OUTSWING COMMERCIAL GALVANNEAL OR STAINLESS STEEL FRAME DOOR SHOWN ON THIS PRODUCT EVALUATION DOCUMENT (P.E.D.) HAS BEEN VERIFIED FOR CODE COMPLIANCE IN ACCORDANCE WITH THE **2023 (8th EDITION)** OF THE FLORIDA BUILDING CODE. DOOR MAY BE INSTALLED AT HIGH VELOCITY HURRICANE ZONES.

DESIGN WIND LOADS SHALL BE DETERMINED AS PER SECTIONS 1620 & 1609 OF THE ABOVE MENTIONED CODE, USING **ASCE 7-22** AND SHALL NOT EXCEED THE MAXIMUM (A.S.D.) DESIGN PRESSURE RATINGS INDICATED ON SHEET 3.

IN ORDER TO VERIFY THE ABOVE CONDITION, ULTIMATE DESIGN WIND LOADS DETERMINED PER **ASCE 7-22** SHALL BE FIRST REDUCED TO A.S.D. DESIGN WIND LOADS BY MULTIPLYING THEM BY 0.6 IN ORDER TO COMPARE THESE W/ MAX. (A.S.D.) DESIGN PRESSURE RATINGS INDICATED ON SHEETS 3.

THIS DOOR'S ADEQUACY FOR WIND AND IMPACT LOAD HAS BEEN VERIFIED IN ACCORDANCE WITH SECTION **1626** & **1609.1.2** OF THE ABOVE MENTIONED CODE AS PER PROTOCOLS TAS-201, TAS-202, TAS-203 AS PER CERTIFIED TESTING LAB. REPORTS #CTLA 2045W, #CTLA 2045W-1, #CTLA 2045W-2, #CTLA 2045W-3 AND AS PER SUBMITTED STRUCTURAL CALCULATIONS, PERFORMED AS PER SECTIONS **1616** & **1604** OF THE FLORIDA BUILDING CODE.

2. ALL COMPONENTS SHALL BE AS SPECIFIED ON APPLICABLE DETAIL SHEETS AND AT BILL OF MATERIALS (SHEET 4) OF THIS DRAWING.

3. COMPLIANCE OF EGRESS / ESCAPE REQUIREMENTS OF THESE DOORS PER FLORIDA BUILDING CODE TO BE DETERMINED BY BUILDING OFFICIALS ON A CASE-BY-CASE BASIS.

4. ALL SCREWS USED FOR ASSEMBLY CONNECTIONS (METAL TO METAL) TO BE STAINLESS STEEL 304 OR 316 AISI SERIES OR CORROSION RESISTANT COATED CARBON STEEL AS PER DIN 50018 WITH 50 ksi YIELD POINT AND 90 ksi TENSILE STRENGTH & SHALL COMPLY W/ FLORIDA BUILDING CODE SECTION **2411.3.3.4.**

5. ALL WELDING TO CONFORM W/AMERICAN WELDING SOCIETY A.W.S. D.1.3 AND D-19.0 REGULATIONS WITH E60XX ELECTRODES, FOR GALVANNEAL MATERIAL, AND W/AMERICAN WELDING SOCIETY A.W.S. D.1.6 REGULATIONS W/ E-308 ELECTRODES (FU=80k.s.i.) FOR STAINLESS STEEL MATERIAL

6. ALL ANCHORS FOR DOOR FRAME CONNECTIONS TO EXISTING STRUCTURE SHALL BE AS SPECIFIED ON SHEET 10 OF THIS DRAWING.
MAXIMUM ANCHORS SPACINGS SHALL BE AS PER SCHEDULE ON SHEET 10 AND ELEVATIONS ON SHEET 2 OF THIS DRAWING. SEE SHEET 2 FOR THRESHOLD ANCHORS, AND SHEET 2 FOR MULLION ANCHORS.

7. PROVIDE MAX. LOAD BEARING SHIM SPACE AS INDICATED ON SHEETS 3.

8. THIS DOOR WILL NOT REQUIRE A HURRICANE PROTECTION DEVICE.

9. THESE DOOR ASSEMBLIES ARE APPROVED FOR WATER AND AIR INFILTRATION AS PER TESTING INDICATED ON GENERAL NOTE 1, AND SHALL BE LIMITED TO DESIGN PRESSURE RATINGS INDICATED ON SHEET 3.

10. PROVIDE SPECIFIED SEALANT AT ALL DOOR FRAME & THRESHOLD COMPONENTS INDICATED ON THIS DRAWING.

11. WOOD BUCKS BY OTHERS, MUST BE ANCHORED PROPERTY TO TRANSFER LOADS TO THE BUILDING STRUCTURE AND, MUST BE SOUTHERN PINE W/ G=0.55, AND SHALL COMPLY W/ SECTIONS 2411.3.3.3; 2326 OF THE FLORIDA BUILDING CODE.

12. PERMIT HOLDER SHALL VERIFY THE ADEQUACY OF THE EXISTING STRUCTURE TO SUSTAIN THE SUPERIMPOSED LOADS TRANSFERRED BY THESE DOORS.

13. (a) THIS PRODUCT EVALUATION DOCUMENT (P.E.D.) PREPARED BY THIS ENGINEER IS GENERIC AND DOES NOT PROVIDE INFORMATION FOR A SITE SPECIFIC PROJECT; i.e. WHERE THE SITE CONDITIONS DEVIATE FROM THE P.E.D.

(b) CONTRACTOR TO BE RESPONSIBLE FOR THE SELECTION, PURCHASE AND INSTALLATION INCLUDING LIFE SAFETY OF THIS PRODUCT, BASED ON THIS P.E.D., PROVIDED HE/SHE DOES NOT DEVIATE FROM THE CONDITIONS DETAILED ON THIS DOCUMENT. CONSTRUCTION SAFETY AT SITE IS THE CONTRACTOR'S RESPONSIBILITY.

(c) THIS PRODUCT EVALUATION DOCUMENT (P.E.D.) WILL BE CONSIDERED INVALID IF ALTERED BY ANY MEANS.

(d) ORIGINAL P.E.D SHALL BEAR THE DATE, SEAL AND SIGNATURE OF THE PROFESSIONAL ENGINEER OF RECORD THAT PREPARED IT.

14. PRODUCT MANUFACTURER'S LABEL SHALL BE LOCATED ON A READILY VISIBLE LOCATION AT PRODUCT IN ACCORDANCE WITH SECTION 1709.5 OF THE FLORIDA BUILDING CODE.
ONE LABEL SHALL BE PLACED FOR EVERY OPENING.

8/17/2023

WALTER A. TILLIT JR. LICENSE No. 44167 STATE OF FLORIDA PROFESSIONAL ENGINEER

THIS DRAWING SHALL ONLY BE USED TO OBTAIN PERMITS IN THE STATE OF FLORIDA

SHEETS CONTENT:

SHEET #1 INDEX, COVER SHEET & GENERAL NOTES.
SHEET #2 ASSEMBLY ELEVATIONS No 1 & 2.
SHEET #3 MAX. DESIGN PRESSURE RATING (psf.) SCHEDULE.
SHEET #4 BILL OF MATERIALS.
SHEET #5 COMPONENTS.
SHEET #6 DOOR CONSTRUCTION DETAILS.
SHEET #7 VERTICAL SECTIONS AND DOOR FRAME DETAILS.
SHEET #8 HORIZONTAL SECTIONS & VERTICAL SECTIONS AT HARDWARE.
SHEET #9 RIM EXIT DEVICE W/ REMOVABLE MULLION.
SHEET #10 ANCHOR DETAILS & MAX. SPACING SCHEDULE.

FLORIDA BUILDING CODE (HIGH & NON HIGH VELOCITY HURRICANE ZONE)

©2023 TILTECO, INC.

TILTECO INC.
TILLIT TESTING & ENGINEERING COMPANY
6355N.W. 36th. St. Ste. 305, VIRGINIA GARDENS, Fl. 33166
Phone : (305)871-1530 . Fax : (305)871-1531
e-mail: tilteco@aol.com
CA-0006719
WALTER A. TILLIT Jr. P.E.
FLORIDA Lic. # 44167

DOUBLE & SINGLE SERIES 8080 & 4080 OUTSWING COMMERCIAL GALVANNEAL OR STAINLESS STEEL FRAME DOOR FLUSH OR EMBOSSED

DAYBAR INDUSTRIES LTD
50 WEST DRIVE, BRAMPTON, ON CANADA, L6T 2J4
TEL: 905 625-8000
FAX: 905 625-4204

REV. No	DESCRIPTION	DATE	REV. No	DESCRIPTION	DATE
1	OLD 20-156	08/17/2023	3		
2			4		

DRAWN BY: Y.M.
08/17/2023 DATE
23-179 DRAWING No
SHEET 1 OF 10

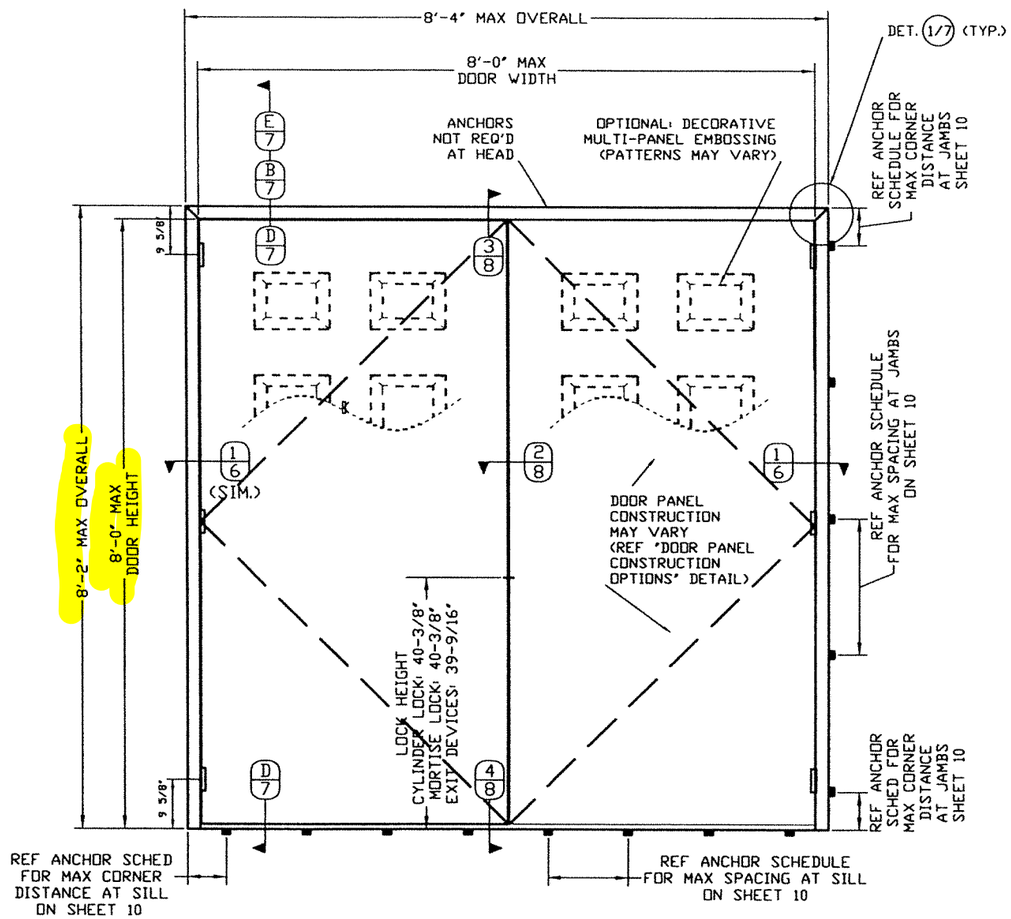

DOUBLE DOOR EXTERIOR ELEVATION: SERIES 8080

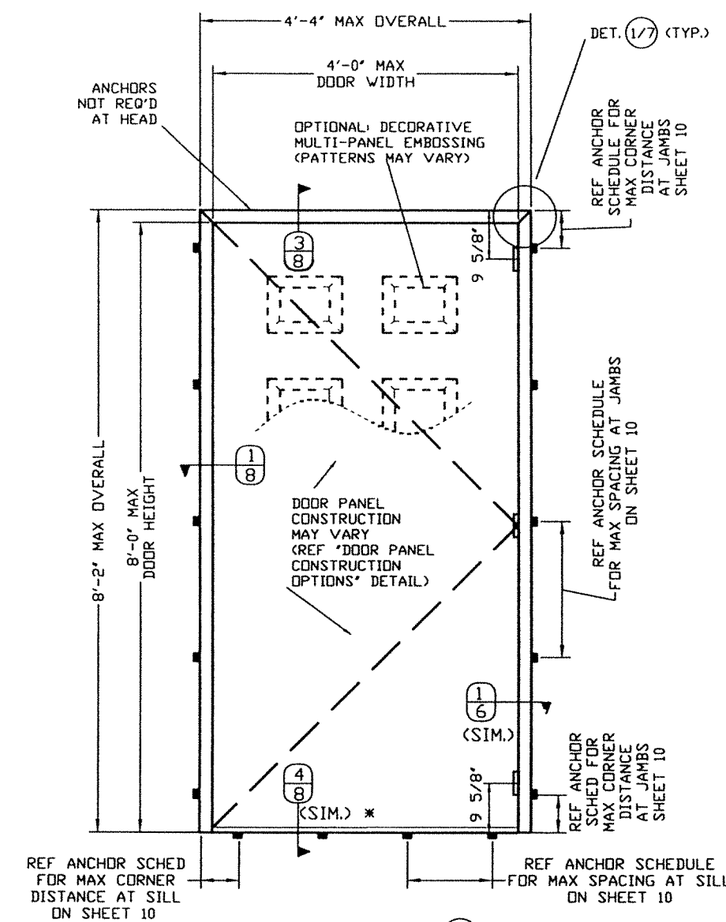

* NO (18) REQUIRED AT SINGLE DOOR.

SINGLE DOOR EXTERIOR ELEVATION: SERIES 4080

WALTER A. TILLIT JR. LICENSE No. 44167 STATE OF FLORIDA PROFESSIONAL ENGINEER

8/17/2023

FLORIDA BUILDING CODE (HIGH & NON HIGH VELOCITY HURRICANE ZONE)

©2023 TILTECO, INC.

TILTECO INC.
TILLIT TESTING & ENGINEERING COMPANY
6355N.W. 36th. St. Ste. 305, VIRGINIA GARDENS, Fl. 33166
Phone : (305)871-1530 . Fax : (305)871-1531
e-mail: tilteco@aol.com
CA-0006719
WALTER A. TILLIT Jr. P.E.
FLORIDA Lic. # 44167

DOUBLE & SINGLE SERIES 8080 & 4080
OUTSWING COMMERCIAL GALVANNEAL OR
STAINLESS STEEL FRAME DOOR
FLUSH OR EMBOSSED

DAYBAR INDUSTRIES LTD
50 WEST DRIVE, BRAMPTON,
ON CANADA, L6T 2J4
TEL: 905 625-8000
FAX: 905 625-4204

REV. No	DESCRIPTION	DATE	REV. No	DESCRIPTION	DATE
1	OLD 20-156	08/17/2023	3		
2			4		

DRAWN BY: Y.M.

08/17/2023
DATE

23-179
DRAWING No

SHEET 2 OF 10

MAX. A.S.D. DESIGN PRESSURE RATING (psf.) SCHEDULE FOR INSTALLATIONS COVERING SERIES 8080 & SERIES 4080 DOORS FOR A GIVEN ANCHOR JAMB TYPE *

ITEM (SEE SHEET 5)	ANCHOR SPECIFICATIONS AT JAMBS *	SERIES 8080 DOOR (SEE SHEET 2)	SERIES 4080 DOOR (SEE SHEET 2)
35	0.157" DIA.x9 1/2" LONG WIRE ANCHOR (SEE DETAIL 1/10)	+50, -50	+70, -70
36	2 PIECE COMBINATION STUD ANCHOR (SEE DETAIL 5/10 & 5A/10)	+50, -50	+70, -70
37	EXISTING MASONRY ANCHOR & E.M.A. (SEE DETAIL 2/10)	+50, -50	+70, -70
37	EXISTING WOOD BUCK ANCHOR W/WOOD SCREW LAG BOLT & E.M.A. (SEE DETAIL 3/10)	+50, -50	+70, -70
37	EXISTING WOOD BUCK ANCHOR W/ STEEL CARRIAGE BOLT & E.M.A. (SEE DETAIL 4/10)	+50, -50	+70, -70
37	CHANNEL IRON THROUGH BOLTING W/3/8" x 3 1/2" STEEL FLAT HEAD MACHINE SCREW & E.M.A. (SEE DETAIL 6/10)	+50, -50	+70, -70
-	CHANNEL IRON W/3/8" STITCH WELD (SEE DETAIL 7/10)	+50, -50	+70, -70

* NOTES ON FRAME HEAD REQUIREMENTS

1. FOR SINGLE & DOUBLE DOORS INSTALLED AT WOOD FRAME BUILDINGS, DOOR HEADS SHALL BE CONTINUOUSLY RETAINED BY EXISTING BUILDINGS WOOD HEADER FOLLOWING DETAILS AS PER SECTION E, SHEET 7.

2. FOR SINGLE & DOUBLE DOORS INSTALLED AT STEEL FRAME BUILDINGS, DOOR HEADS SHALL BE CONTINUOUSLY WELDED TO EXISTING BUILDINGS STEEL FRAME HEADER FOLLOWING DETAILS AS PER SECTION E, SHEET 7 & DETAIL 7 ON SHEET 10.

3. FOR SINGLE & DOUBLE DOORS INSTALLED AT CONCRETE /MASONRY BUILDINGS, DOOR HEADS NEED NOT BE ATTACHED TO EXISTING BUILDINGS HEADER. APPLICABLE TO SECTIONS D/7 & 3/8.

WALTER A. TILLIT JR. LICENSE No. 44167 STATE OF FLORIDA PROFESSIONAL ENGINEER

8/17/

FLORIDA BUILDING CODE (HIGH & NON HIGH VELOCITY HURRICANE ZONE)

©2023 TILTECO, INC.

TILTECO INC.
TILLIT TESTING & ENGINEERING COMPANY
6355N.W. 36th. St., Ste. 305, VIRGINIA GARDENS, Fl. 33166
Phone : (305)871-1530 . Fax : (305)871-1531
e-mail: tilteco@aol.com
CA-0006719
WALTER A. TILLIT Jr. P.E.
FLORIDA Lic. # 44167

DOUBLE & SINGLE SERIES 8080 & 4080 OUTSWING COMMERCIAL GALVANNEAL OR STAINLESS STEEL FRAME DOOR FLUSH OR EMBOSSED

DAYBAR INDUSTRIES LTD
50 WEST DRIVE, BRAMPTON, ON CANADA, L6T 2J4
TEL: 905 625-8000
FAX: 905 625-4204

REV. No	DESCRIPTION	DATE	REV. No	DESCRIPTION	DATE
1	OLD 20-156	08/17/2023	3		
2			4		

DRAWN BY: Y.M.
08/17/2023 DATE
23-179 DRAWING No
SHEET 3 OF 10

BILL OF MATERIALS:

ITEM	DESCRIPTION	MATERIAL	SIZE AND SPEC'S
1	PERIMETER FRAME (HEAD, SILL, JAMB)	16ga (0.051") GALVANNEALED STEEL: ASTM A653, TYPE B, WITH A40 PAINTABLE GALVANNEAL COATING	(Fy=45ksi, Fu=52ksi) OR AISI 304 SERIES STAINLESS STEEL (Fy=45ksi, Fu=101ksi).
2	DOOR PANEL ASSEMBLY (FLUSH OR EMBOSSED)	GALVANNEALED STEEL: ASTM A924, ASTM A653, TYPE B, WITH A40 PAINTABLE GALVANNEAL COATING	(Fy=45ksi, Fu=60ksi) OR AISI 304 SERIES STAINLESS STEEL (Fy=45ksi, Fu=101ksi).
4	THRESHOLD: HAGER 477S	EXTRUDED ALUMINUM 6063-T5 WITH VINYL BUMPER	
5	THRESHOLD: HAGER 520S	EXTRUDED ALUMINUM 6063-T5 WITH VINYL BUMPER	
6	DOOR TOP/BOTTOM CHANNEL: 1.6875" x 1.439"	16ga (0.051") GALVANNEAL STEEL (ASTM A653 WITH G60 COATING) OR STAINLESS STEEL (AISI 304 SERIES)	
7	DOOR SNAP-IN TOP/BOTTOM CAP: 1.5625" x 1.00"	20ga (0.032") GALVANNEAL STEEL (ASTM A653 WITH G60 COATING) OR STAINLESS STEEL (AISI 304 SERIES)	
8	CONTINUOUS HINGE: HAGER ROTON 780-224 HD	6063-T6 ALUMINUM	
9A	FULL MORTISE HINGE (STANDARD): HAGER #BB-1279	STEEL (PER MFR'S SPECS)	
9B	FULL MORTISE HINGE (STANDARD): HAGER #BB-1191	STAINLESS STEEL (PER MFR'S SPECS)	
10A	FULL MORTISE HINGE (HEAVY): HAGER #BB-1168	STEEL (PER MFR'S SPECS)	
10B	FULL MORTISE HINGE (HEAVY): HAGER #BB-1199	STAINLESS STEEL (PER MFR'S SPECS)	
11	RIM EXIT DEVICE: HAGER 4500 SERIES	STAINLESS STEEL (PER MFR'S SPECS)	
12	RIM STRIKE: HAGER 4920F	STAINLESS STEEL (PER MFR'S SPECS)	W/ TOP LATCH #492 & #4928 AT ENDS.
13	SVR EXIT DEVICE: HAGER 4500 SERIES	STAINLESS STEEL (PER MFR'S SPECS)	
14	SVR TOP STRIKE: HAGER 4923F	STAINLESS STEEL (PER MFR'S SPECS)	
15	CYLINDRICAL LOCK: HAGER 3400 OR 3500 SERIES	STAINLESS STEEL (PER MFR'S SPECS)	
16	DEAD BOLT: HAGER 3100 SERIES	STAINLESS STEEL (PER MFR'S SPECS)	
17	MORTISE LOCKSET W/ DEADBOLT: HAGER 3800 SERIES	STAINLESS STEEL (PER MFR'S SPECS)	
18	SURFACE BOLT: HAGER #275D (8" LONG)	STAINLESS STEEL (PER MFR'S SPECS)	
19	DOOR HINGE STILE REINFORCEMENT (REQUIRED FOR MORTISE HINGES ONLY)	8ga GALVANNEAL STEEL OR STAINLESS STEEL	
20	FRAME HINGE REINFORCEMENT (REQUIRED FOR MORTISE HINGES ONLY	8ga GALVANNEAL STEEL OR STAINLESS STEEL	
21	ASTRAGAL STRIKE REINFORCEMENT	12ga GALVANNEAL STEEL OR STAINLESS STEEL	
22	FRAME STRIKE REINFORCEMENT	14ga (0.074") GALVANNEAL STEEL OR STAINLESS STEEL	
23	DOOR LOCK STILE REINF (MORTISE LOCK): 3.500" x 1.660"	14ga (0.074") GALVANNEAL STEEL OR STAINLESS STEEL	
24	CYLINDRICAL LOCK AND DEADBOLT REINFORCEMENT	STEEL, SATIN COATING	
25	DOOR SURFACE BOLT REINFORCEMENT: 1.688" x 3.5" x 9"	14ga (0.074") GALVANNEAL STEEL OR STAINLESS STEEL	
26	DOOR CLOSER REINFORCEMENT: 1.688" x 3.5" x 16.25"	14ga (0.074") GALVANNEAL STEEL OR STAINLESS STEEL	
27	BUTTERFLY ANCHOR CLIP: EMA #PT1-008	STEEL (PER MFR'S SPECS)	
28	MASONRY WIRE ANCHOR	STEEL: Fy=40ksi, Fu=96ksi	
29	CLIP-IN STUD ANCHOR	20ga (0.035") ASTM A653 A-60 GALVANNEALED STEEL	
30	ASTRAGAL WEATHERSTRIPPING: HAGER 872S	PER MFR'S SPECS (NEOPRENE INSERT)	
31	ASTRAGAL WEATHERSTRIPPING: HAGER 874S	PER MFR'S SPECS (NEOPRENE INSERT)	
32	PRESS-ON WEATHERSTRIPPING: HAGER 726S	SILICONE, SELF-ADHESIVE	
33	PERIMETER WEATHERSTRIPPING: HAGER 891S	PER MFR'S SPECS (VINYL BUMPER)	
34	DOOR SWEEP: HAGER 770S	PER MFR'S SPECS (VINYL BUMPER)	
35	WIRE MASONRY FRAME ANCHORS	STEEL W/ MIN. YIELD STRENGTH = 40.2Ksi AND MIN. TENSILE STRENGTH = 95.9 Ksi	9 1/2" LONG X 0.157" MIN. DIAMETER.
36	CLIPIN STUD ANCHORS (2 PIECE COMBINATION)	STEEL, ASTM A-653, A-60 GALVANNEAL	1 7/8" X 5 5/8" X 20 GAUGE (.035 MIN) W/ (4)#8 X 1 5/8" WOOD SCREWS.
37	EMA BUTTERFLY ANCHOR (PART #PT1-008)	STEEL	18 GAUGE STEEL SATIN COAT.
38	8" LONG # 275 D HAGER SURFACE BOLT	STEEL W/ US26D FINISH	ENGAGED TO THE DOOR AT TOP AND BOTTOM TO HEADER & THRESHOLD RESPECTIVELY & FASTENED TO DOOR W/ (4) #10-24 x 1 1/2" THRU BOLT EACH CONNECTION.
39	VON DUPRIN #9954 REMOVABLE MULLION	0.125" THICK A 500 GRADE B STEEL	SECURED TO 499 STRIKE PLATE WITH (8) 5/16"Ø-18x1"(MIN.) MACHINE SCREWS.
40	CAULKING GE SILICONE II	SILICONE	AS SHOWN ON DETAIL.
41	SURFACE STRIKE REINFORCEMENT	12 GAGE GALVANNEAL OR STAINLESS STEEL	12 GAGE (0.097" MIN.) x 154" x 11.875" LONG (SEE SHEET 9).
42	MULLION FITTING #8620	STEEL	USE AT (39)

* AISI 304 SERIES STAINLESS STEEL WITH Fy =45.75 Ksi AND Fu= 101.38 Ksi

WALTER A. TILLIT JR. LICENSE No. 44167 STATE OF FLORIDA PROFESSIONAL ENGINEER

8/17/2023

FLORIDA BUILDING CODE (HIGH & NON HIGH VELOCITY HURRICANE ZONE)

©2023 TILTECO, INC.

TILTECO INC.
TILLIT TESTING & ENGINEERING COMPANY
6355N.W. 36th. St., Ste. 305, VIRGINIA GARDENS, FL 33166
Phone : (305)871-1530 . Fax : (305)871-1531
e-mail: tilteco@aol.com
CA-0006719
WALTER A. TILLIT Jr. P.E.
FLORIDA Lic. # 44167

DOUBLE & SINGLE SERIES 8080 & 4080 OUTSWING COMMERCIAL GALVANNEAL OR STAINLESS STEEL FRAME DOOR FLUSH OR EMBOSSED

DAYBAR INDUSTRIES LTD
50 WEST DRIVE, BRAMPTON, ON CANADA, L6T 2J4
TEL: 905 625-8000
FAX: 905 625-4204

REV. No	DESCRIPTION	DATE	REV. No	DESCRIPTION	DATE
1	OLD 20-156	08/17/2023	3		
2			4		

DRAWN BY: Y.M.
08/17/2023 DATE
23-179 DRAWING No

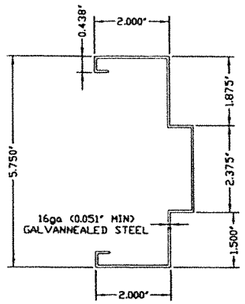

1 PERIMETER FRAME

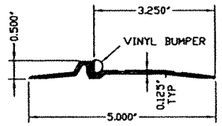

4 THRESHOLD(520S)

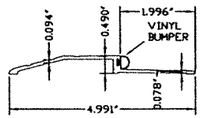

5 THRESHOLD(477S)

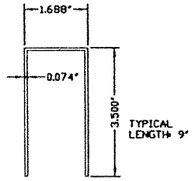

25 SURFACE BOLT REINFORCEMENT

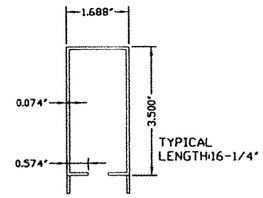

26 DOOR CLOSER REINFORCEMENT

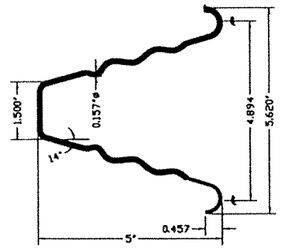

35 WIRE ANCHOR FOR DETAIL #21/17

STEEL WIRE ANCHORS
(0.157" DIA, 9 1/2" LONG) IN HORIZ.
Fu Min.=95.9 Ksi, Fy Min.=40.2 Ksi

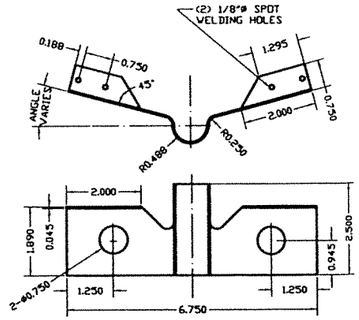

37 EMA BUTTERFLY ANCHOR (PART #PT1-008) FOR DETAILS 2/10, 3/10 4/10 & 6/10

MATERIAL: 18 GA SATIN COAT

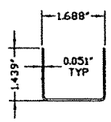

6 DOOR TOP/ BOTTOM CHANNEL

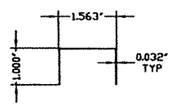

7 DOOR SNAP-IN TOP/BOTTOM CAP

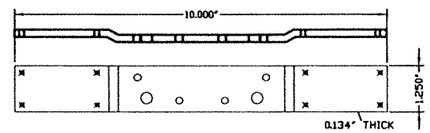

19 DOOR STILE HINGE REINF

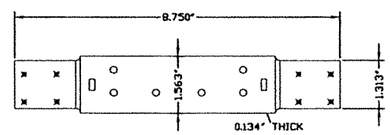

20 FRAME HINGE REINF

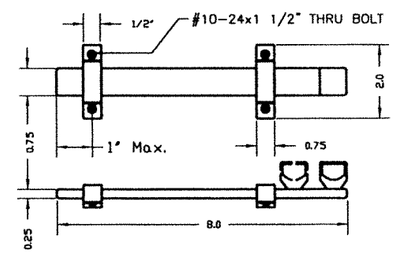

38 SURFACE BOLT

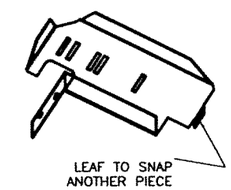

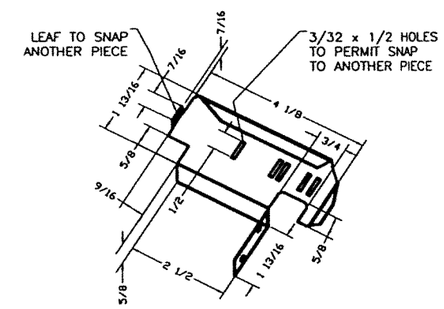

36 2 PIECE COMBINATION STUD ANCHOR FOR DETAILS #5, 5A/10

CLIPIN STUD ANCHOR MATERIAL: GAUGE
20 (0.035) ASTM A-653,
A-60 GALVANNEALED STEEL.

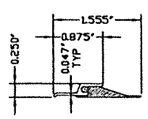

30 ASTRAGAL SEAL(872S)

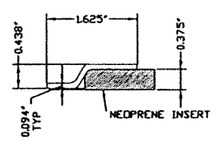

31 ASTRAGAL SEAL(874S)

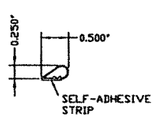

32 PRESS-ON SEAL

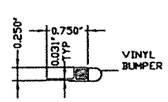

33 PERIMETER BUMPER

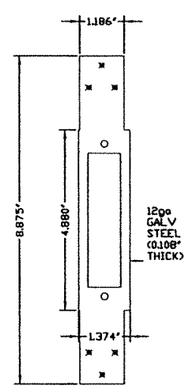

21 ASTRAGAL STRIKE REINF

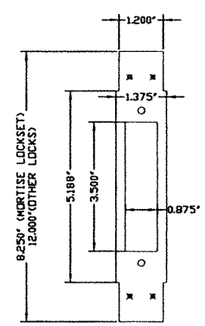

22 FRAME STRIKE REINF

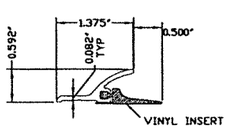

34 DOOR SWEEP

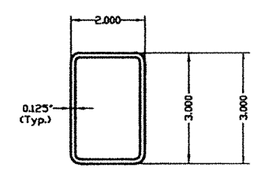

39 REMOVABLE MULLION

COMPONENTS

8/17/20

WALTER A. TILLIT JR.
LICENSE
No. 44167
STATE OF
FLORIDA
PROFESSIONAL ENGINEER

FLORIDA BUILDING CODE (HIGH & NON HIGH VELOCITY HURRICANE ZONE)

©2023 TILTECO, INC.

TILTECO INC.
TILLIT TESTING & ENGINEERING COMPANY
6335 N.W. 36th. St. Ste. 305, VIRGINIA GARDENS, Fl. 33166
Phone : (305)871-1530 . Fax : (305)871-1531
e-mail: tilteco@aol.com
CA-0006719
WALTER A. TILLIT Jr. P.E.
FLORIDA Lic. # 44167

DOUBLE & SINGLE SERIES 8080 & 4080
OUTSWING COMMERCIAL GALVANNEAL OR
STAINLESS STEEL FRAME DOOR
FLUSH OR EMBOSSED

DAYBAR INDUSTRIES LTD
50 WEST DRIVE, BRAMPTON,
ON CANADA, L6T 2J4
TEL: 905 625-8000
FAX: 905 625-4204

REV. No	DESCRIPTION	DATE	REV. No	DESCRIPTION	DATE
1	OLD 20-156	08/17/2023	3		
2			4		

DRAWN BY: Y.M.

08/17/2023
DATE

23-179
DRAWING No

SHEET 5 OF 10

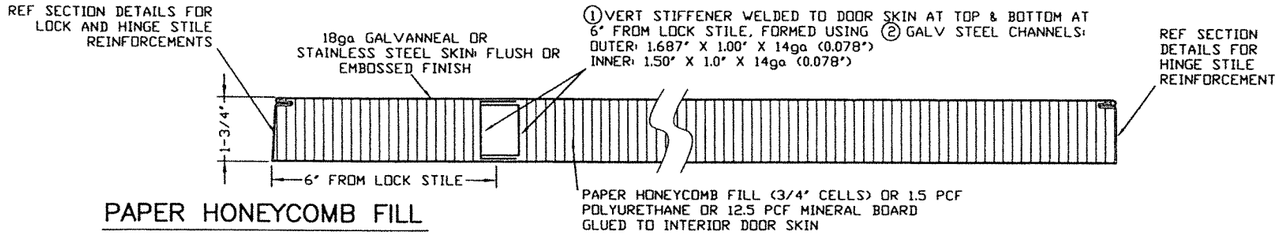

PAPER HONEYCOMB FILL

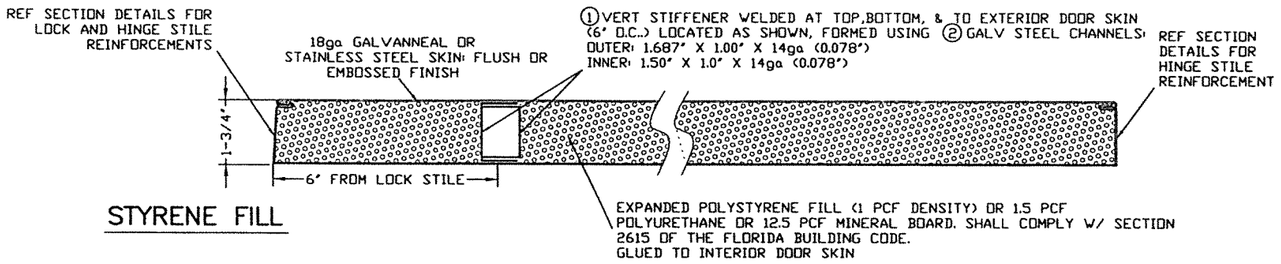

STYRENE FILL

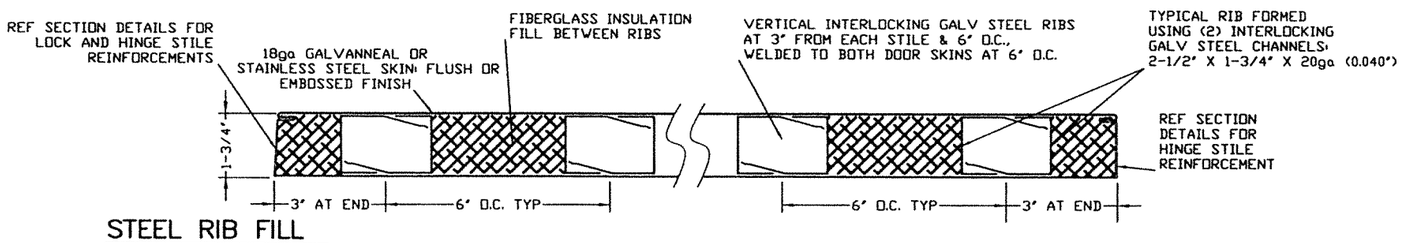

STEEL RIB FILL

DOOR PANEL CONSTRUCTION OPTIONS (HORIZONTAL SECTIONS)

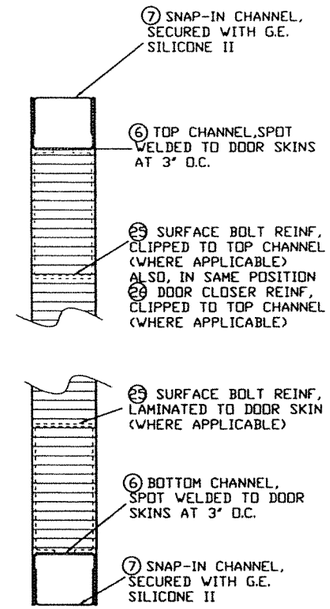

TYPICAL DOOR TOP & BOTTOM

CONSTRUCTION (VERTICAL SECTION)

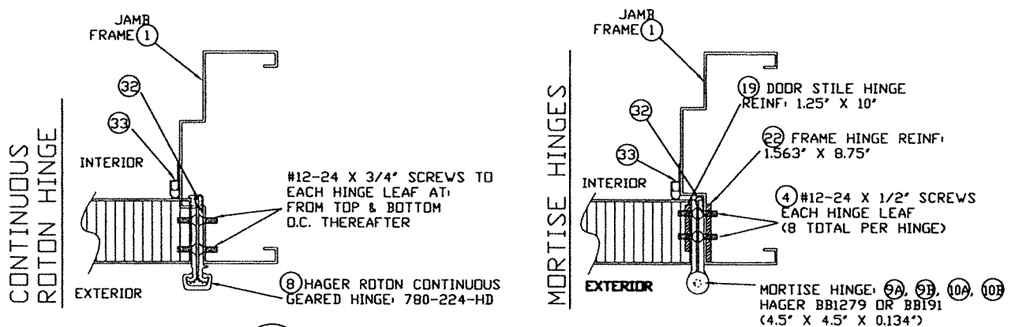

1/6 SECTIONS AT HINGE STILE

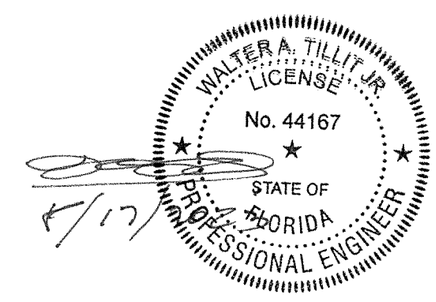

FLORIDA BUILDING CODE (HIGH & NON HIGH VELOCITY HURRICANE ZONE)

©2023 TILTECO, INC.

TILTECO INC.
TILLIT TESTING & ENGINEERING COMPANY
6355N.W. 36th. St., Ste. 305, VIRGINIA GARDENS, Fl. 33166
Phone : (305)871-1530 . Fax : (305)871-1531
e-mail: tilteco@aol.com
CA-0006719
WALTER A. TILLIT Jr. P.E.
FLORIDA Lic. # 44167

DOUBLE & SINGLE SERIES 8080 & 4080
OUTSWING COMMERCIAL GALVANNEAL OR
STAINLESS STEEL FRAME DOOR
FLUSH OR EMBOSSED

DAYBAR INDUSTRIES LTD
50 WEST DRIVE, BRAMPTON,
ON CANADA, L6T 2J4
TEL: 905 625-8000
FAX: 905 625-4204

REV. No	DESCRIPTION	DATE	REV. No	DESCRIPTION	DATE
1	OLD 20-156	08/17/2023	3		
2			4		

DRAWN BY: Y.M.

08/17/2023
DATE

23-179
DRAWING No

SHEET 6 OF 10

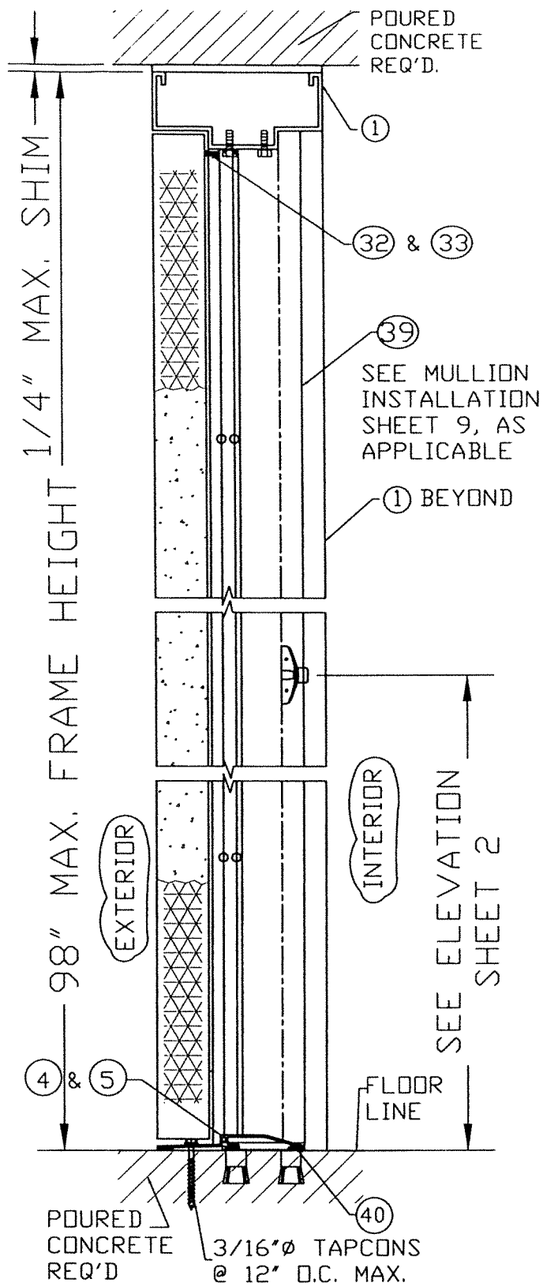

SECTION D-D

SINGLE DOOR DOES NOT NEED MULLION.
LATCH ONTO REINFORCED JAMB

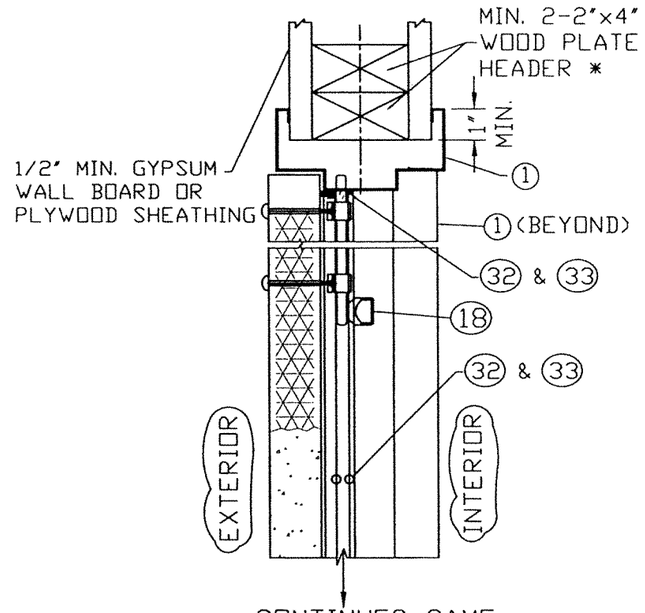

SECTION E-E

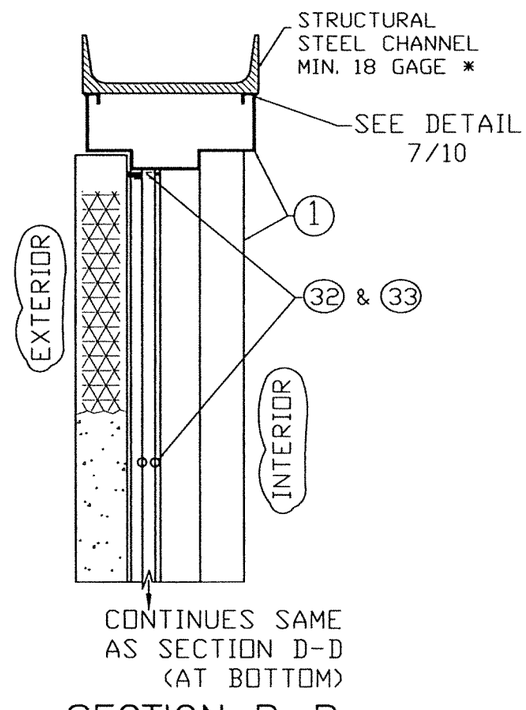

SECTION B-B

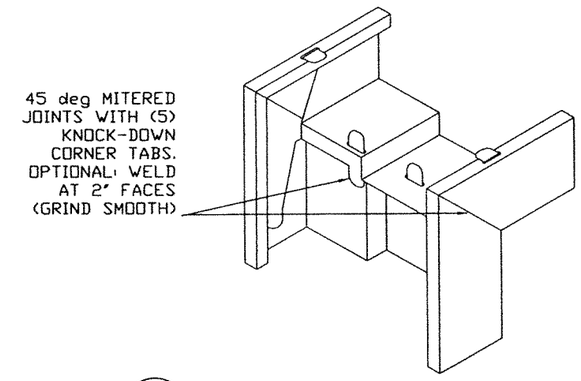

1/7 FRAME CORNER:TABBED KNOCKDOWN ASSEMBLY

* STRUCTURAL MEMBER AT HEADER MUST BE DESIGNED TO CARRY 174 #/FT & BE REVIEWED BY BUILDING OFFICIAL

WALTER A. TILLIT JR. LICENSE No. 44167 STATE OF FLORIDA PROFESSIONAL ENGINEER

8/17/23

FLORIDA BUILDING CODE (HIGH & NON HIGH VELOCITY HURRICANE ZONE)

©2023 TILTECO, INC.

TILTECO INC.
TILLIT TESTING & ENGINEERING COMPANY
6355N.W. 36th. St., Ste. 305, VIRGINIA GARDENS, Fl. 33166
Phone : (305)871-1530 . Fax : (305)871-1531
e-mail: tilteco@aol.com
CA-0006719
WALTER A. TILLIT Jr. P.E.
FLORIDA Lic. # 44167

DOUBLE & SINGLE SERIES 8080 & 4080 OUTSWING COMMERCIAL GALVANNEAL OR STAINLESS STEEL FRAME DOOR FLUSH OR EMBOSSED

DAYBAR INDUSTRIES LTD
50 WEST DRIVE, BRAMPTON, ON CANADA, L6T 2J4
TEL: 905 625-8000
FAX: 905 625-4204

REV. No	DESCRIPTION	DATE	REV. No	DESCRIPTION	DATE
1	OLD 20-156	08/17/2023	3		
2			4		

DRAWN BY: Y.M.
08/17/2023 DATE
23-179 DRAWING No
SHEET 7 OF 10

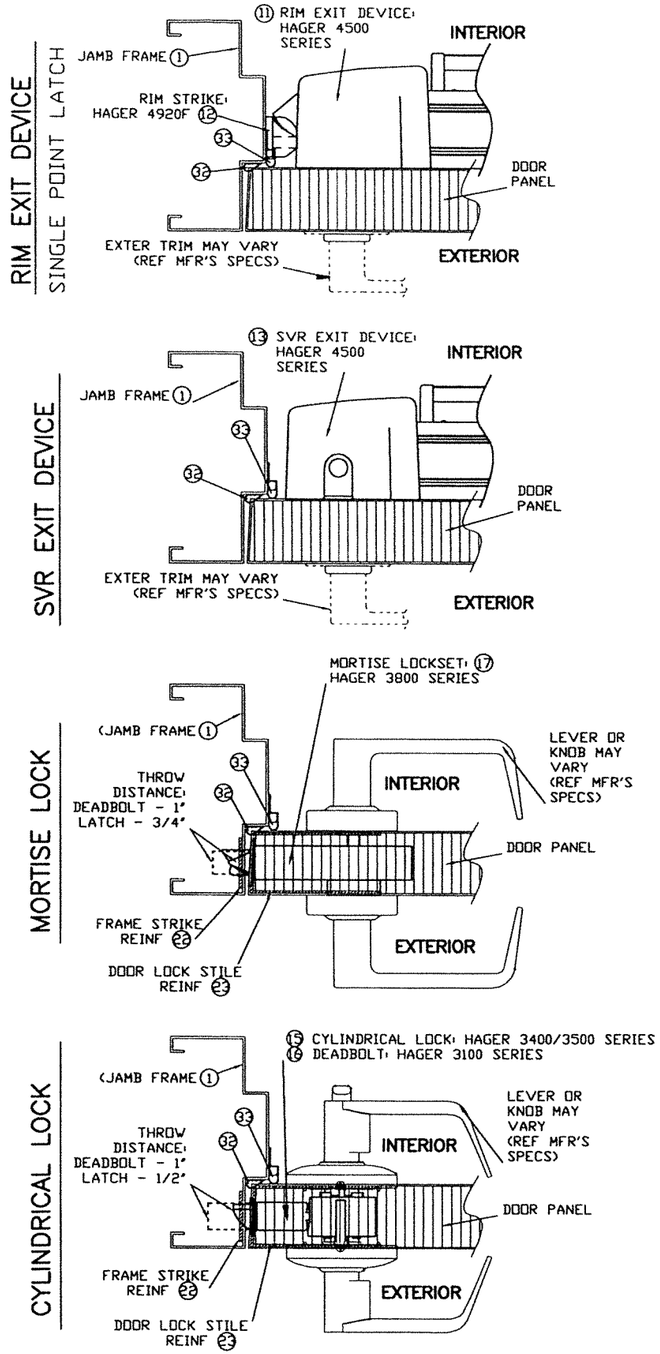

1/8 SECTION AT LOCK STILE (SINGLE DOOR)

SCALE: 3" = 1'-0" HORIZONTAL SECTION

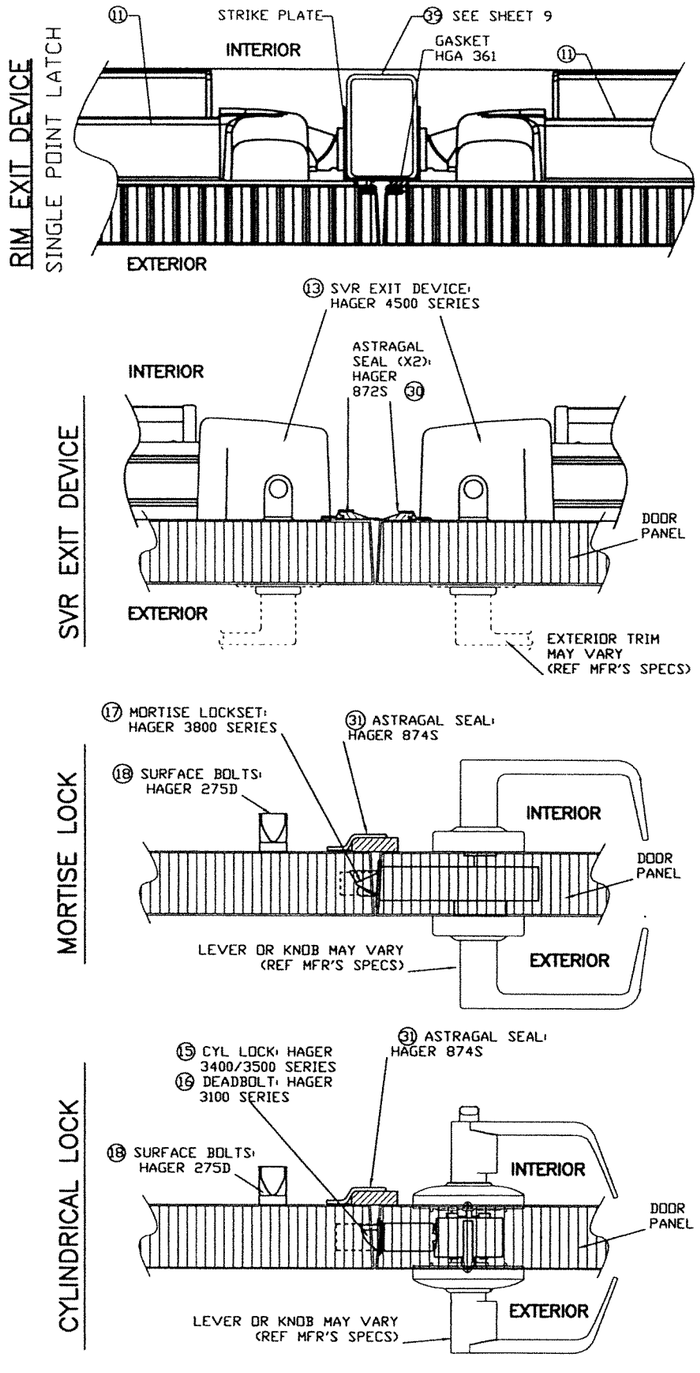

2/8 SECTION AT LOCK STILE (DOUBLE DOOR)

SCALE: 3" = 1'-0" HORIZONTAL SECTION

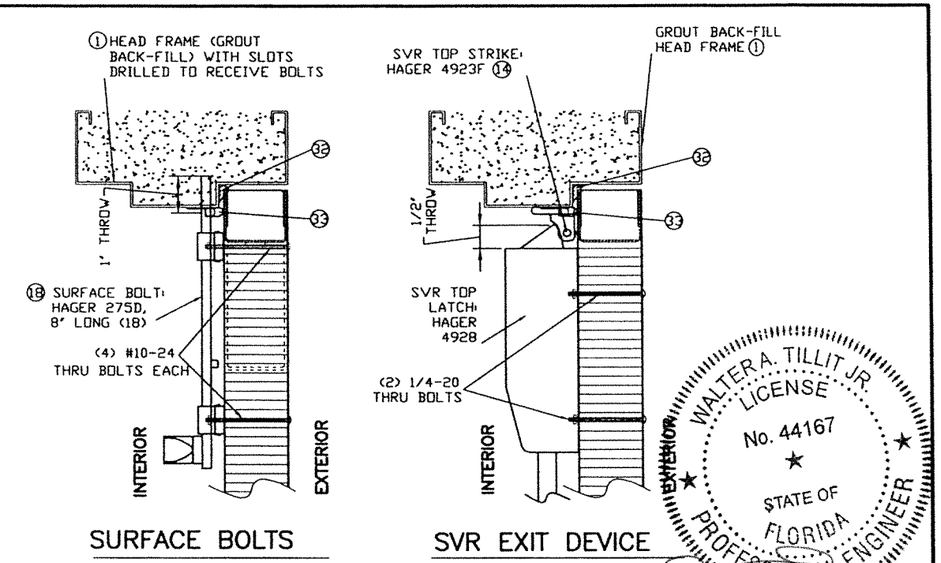

3/8 VERTICAL SECTION AT DOOR HEAD

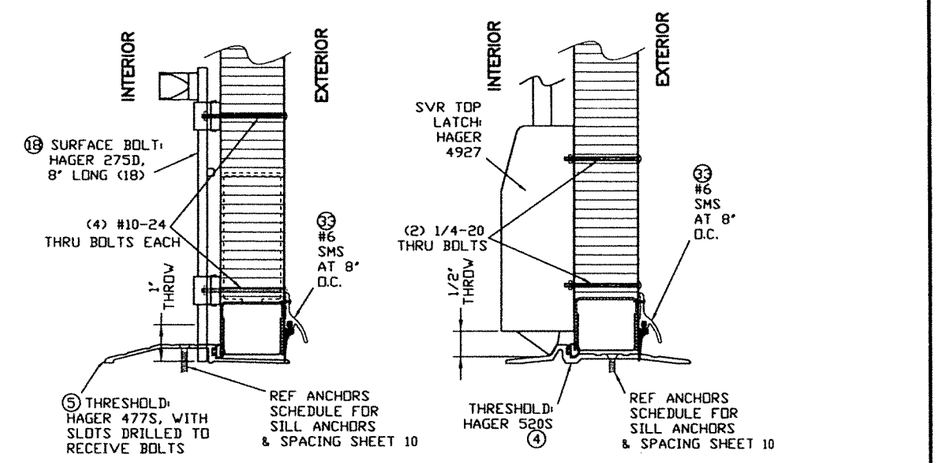

4/8 VERTICAL SECTION AT DOOR SILL

WALTER A. TILLIT JR. LICENSE No. 44167 STATE OF FLORIDA PROFESSIONAL ENGINEER

8/17/2023

FLORIDA BUILDING CODE (HIGH & NON HIGH VELOCITY HURRICANE ZONE)

©2023 TILTECO, INC.

TILTECO INC.
TILLIT TESTING & ENGINEERING COMPANY
6355N.W. 36th. St., Ste. 305, VIRGINIA GARDENS, Fl. 33166
Phone : (305)871-1530 . Fax : (305)871-1531
e-mail: tilteco@aol.com
CA-0006719
WALTER A. TILLIT Jr. P.E.
FLORIDA Lic. # 44167

DOUBLE & SINGLE SERIES 8080 & 4080
OUTSWING COMMERCIAL GALVANNEAL OR
STAINLESS STEEL FRAME DOOR
FLUSH OR EMBOSSED

DAYBAR INDUSTRIES LTD

50 WEST DRIVE, BRAMPTON,
ON CANADA, L6T 2J4
TEL: 905 625-8000
FAX: 905 625-4204

REV. No	DESCRIPTION	DATE	REV. No	DESCRIPTION	DATE
1	OLD 20-156	08/17/2023	3		
2			4		

DRAWN BY: Y.M.

08/17/2023
DATE

23-179
DRAWING No

SHEET 8 OF 10

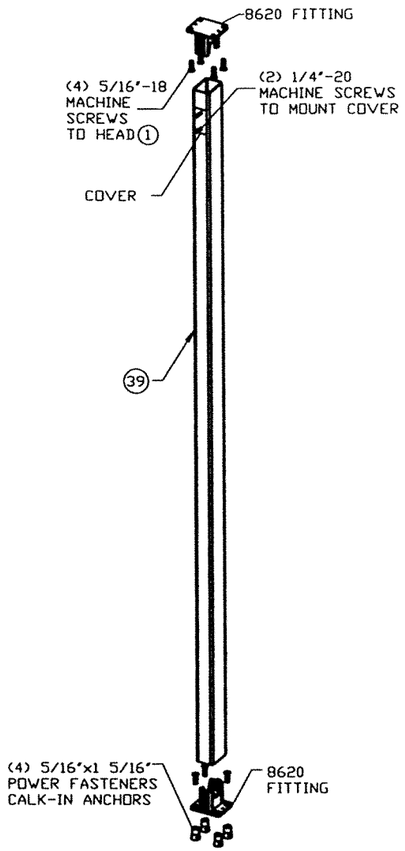

ISOMETRIC

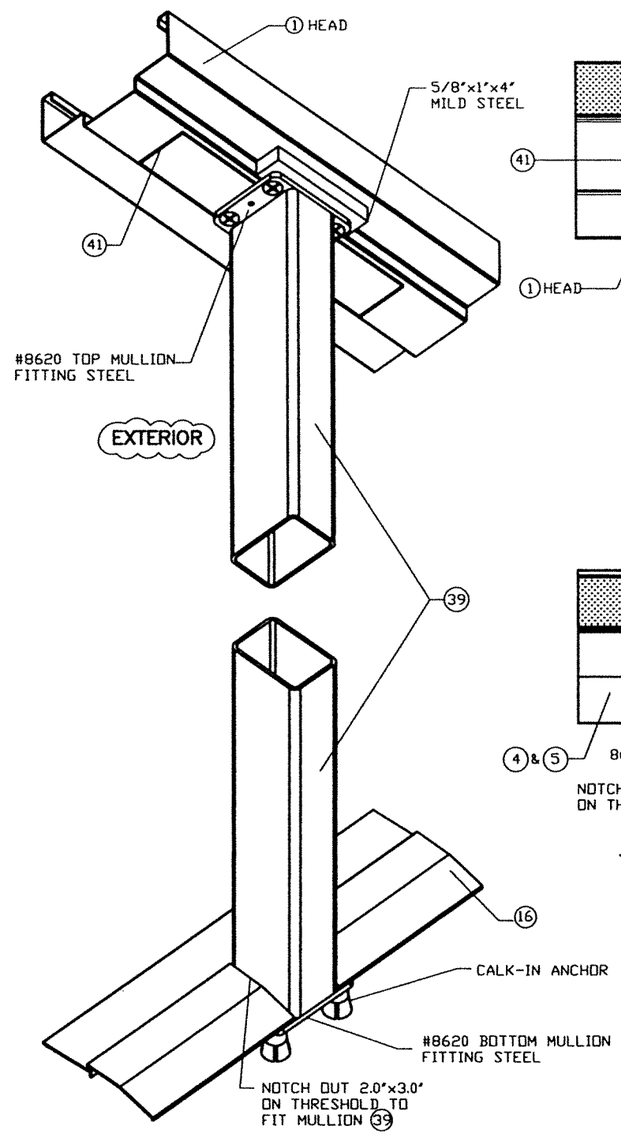

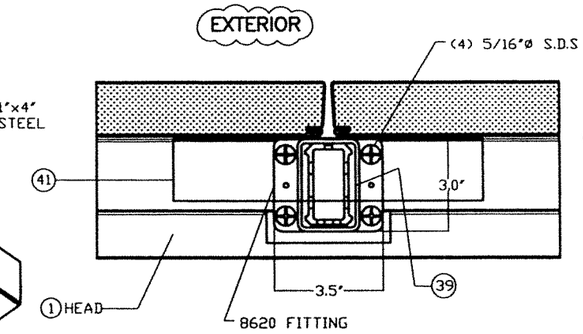

CONNECTION AT TOP (PLAN)

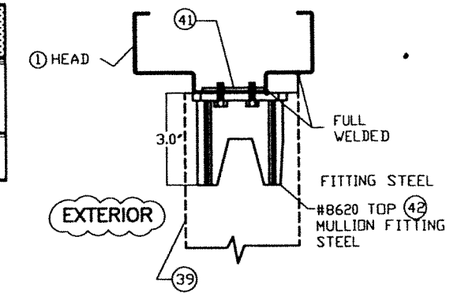

SECTION

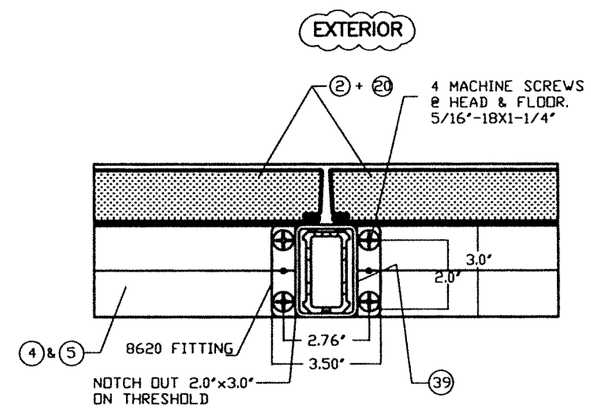

CONNECTION AT BOTTOM (PLAN)

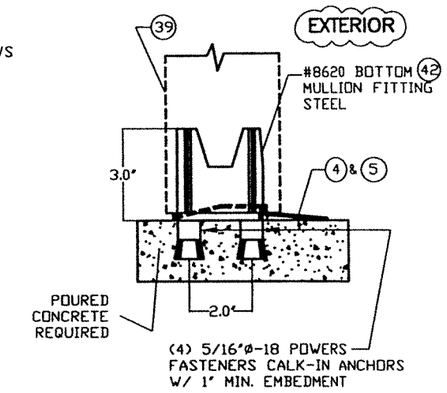

SECTION

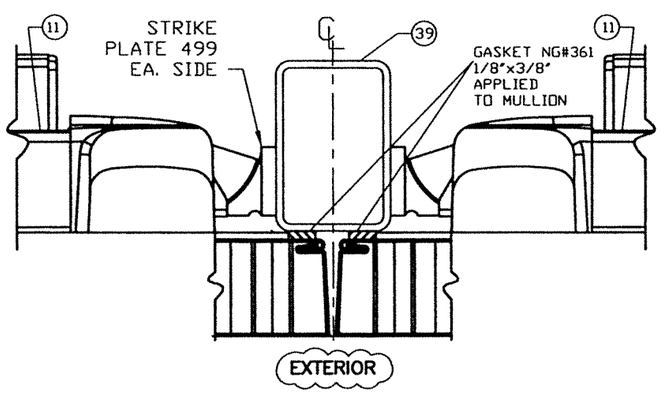

MULLION/DOOR SEAL

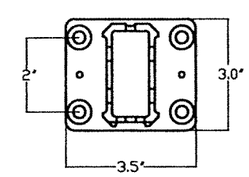

MULLION FITTING 8620 STEEL

WALTER A. TILLIT JR. LICENSE No. 44167 STATE OF FLORIDA PROFESSIONAL ENGINEER

8/17/2023

(39) VON DUPRIN SERIES 9954 (W/ 499 STRIKE PLATE) MULLION INSTALLATION

FLORIDA BUILDING CODE (HIGH & NON HIGH VELOCITY HURRICANE ZONE)

©2023 TILTECO, INC.

TILTECO INC.
TILLIT TESTING & ENGINEERING COMPANY
6355N.W. 36th. St., Ste. 305, VIRGINIA GARDENS, Fl. 33166
Phone : (305)871-1530 . Fax : (305)871-1531
e-mail: tilteco@aol.com
CA-0006719
WALTER A. TILLIT Jr. P.E.
FLORIDA Lic. # 44167

DOUBLE & SINGLE SERIES 8080 & 4080
OUTSWING COMMERCIAL GALVANNEAL OR
STAINLESS STEEL FRAME DOOR
FLUSH OR EMBOSSED

DAYBAR INDUSTRIES LTD
50 WEST DRIVE, BRAMPTON,
ON CANADA, L6T 2J4
TEL: 905 625-8000
FAX: 905 625-4204

REV. No	DESCRIPTION	DATE	REV. No	DESCRIPTION	DATE
1	OLD 20-156	08/17/2023	3		
2			4		

DRAWN BY: Y.M.

08/17/2023 DATE

23-179 DRAWING No

SHEET 9 OF 10

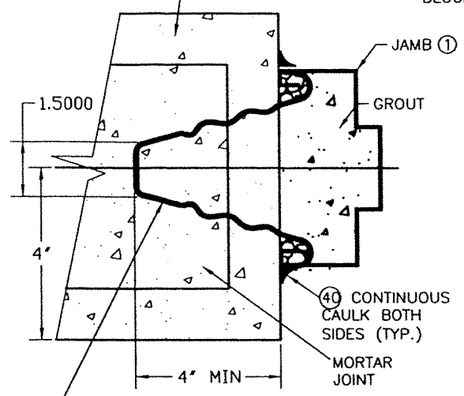

(1) WIRE ANCHOR (35) INSTALLATION TO MASONRY WALLS

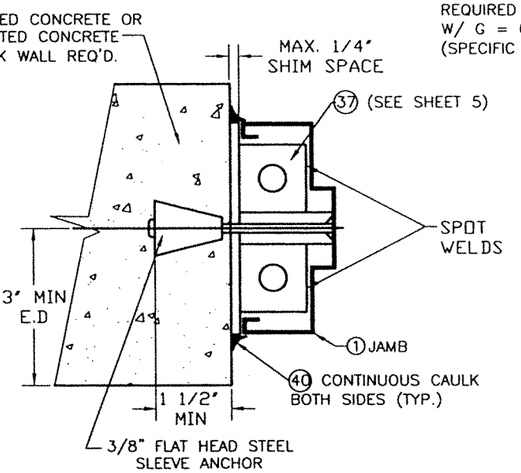

(2) INSTALLATION OF SLEEVE ANCHOR TO MASONRY WALLS

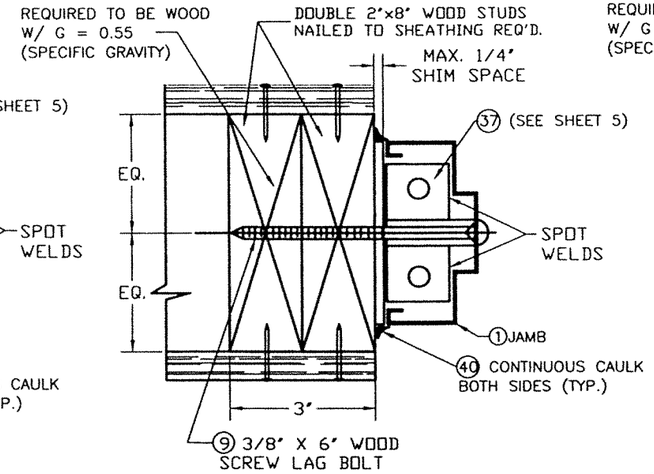

(3) INSTALLATION OF 3/8"ø LAG SCREW (9) TO WOOD FRAME WALLS

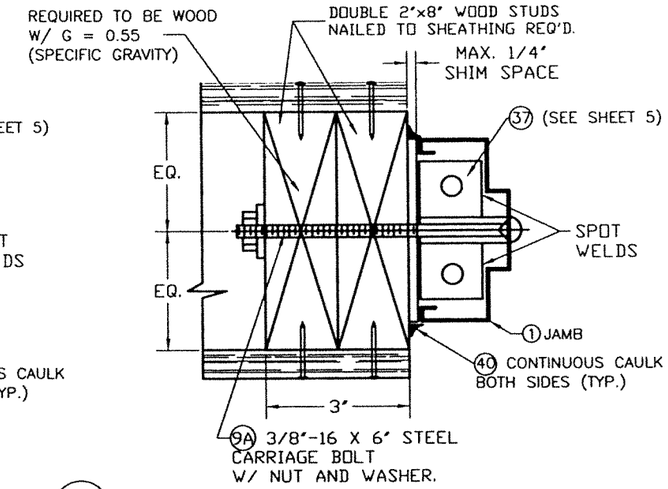

(4) INSTALLATION OF 3/8"ø CARRIAGE BOLT (9A) TO WOOD FRAME WALLS

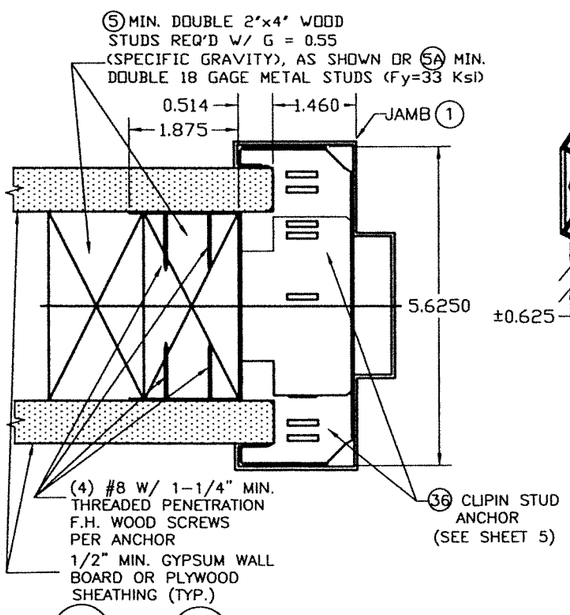

(5) & (5A) INSTALLATION OF 2 PIECE COMBINATION STUD ANCHOR (36) INTO WOOD FRAME OR METAL STUD WALLS

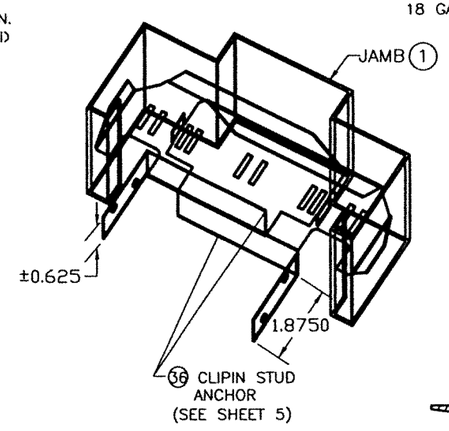

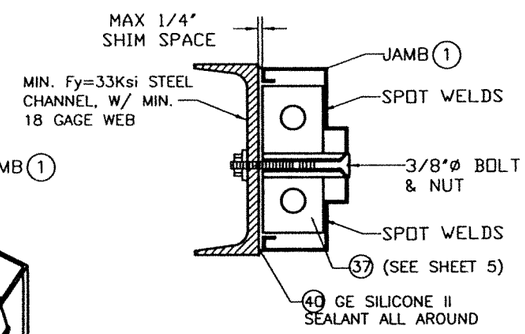

(6) INSTALLATION OF 3/8ø F.H. M.S TO STEEL CHANNEL

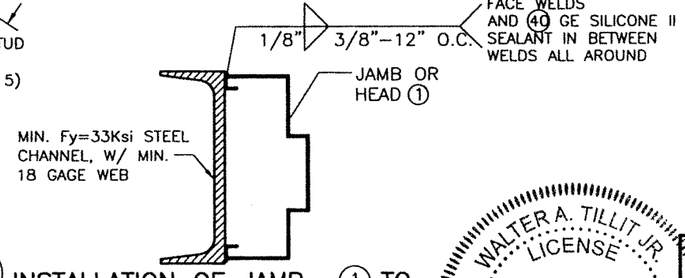

(7) INSTALLATION OF JAMB (1) TO STEEL CHANNEL THRU WELDING

ANCHOR SCHEDULE

DETAIL	ANCHOR	SUBSTRATE	SINGLE DOORS				DOUBLE DOORS			
			SILL		JAMBS		SILL		JAMBS	
			CORNERS	SPACING	CORNERS	SPACING	CORNERS	SPACING	CORNERS	SPACING
2/10	3/8" SLEEVE ANCHORS 4	CONCRETE OR G.F. MASONRY	6"	12" OC	6"	21" OC	6"	12" OC	6"	21" OC
6/10	3/8" BOLT & NUT	STEEL	6"	12" OC	6"	21" OC	6"	12" OC	6"	21" OC
3/10	3/8" LAG SCREWS	WOOD	6"	12" OC	6"	16" OC	6"	12" OC	6"	12" OC
5/10	CLIP-IN STUD ANCHORS	WOOD STUDS	N / A		9"	17" OC	N / A		6"	17" OC
5A/10	CLIP-IN STUD ANCHORS	METAL STUDS	N / A		9"	17" OC	N / A		9"	17" OC
1/10	MASONRY WIRE	MASONRY	N / A		16"	16" OC	N / A		16"	16" OC
7/10	DIRECT WELD	STEEL	N / A		6"	21" OC	N / A		6"	21" OC
D-D/7	3/16" TAPCON ITW/BUILDEX	CONCRETE OR WOOD	5"	12" OC	N / A	N / A	5"	12" OC	N / A	N / A

ANCHOR NOTES:

1. SEE EXTERIOR ELEVATION & ANCHOR SCHEDULE FOR ANCHOR LOCATIONS AND/OR SPACING.
2. NO ANCHORS REQUIRED AT FRAME HEAD.
3. ANCHOR SCHEDULE GIVES MAXIMUM CORNER DISTANCE AND SPACING.
4. ANCHORS SHALL BE INSTALLED IN ACCORDANCE WITH MANUFACTURERS' RECOMMENDATIONS.
5. 3/8" SLEEVE ANCHOR OPTIONS FOR INSTALLATION TO CONCRETE OR GROUT-FILLED BLOCK:
   3/8" RED HEAD DYNABOLT SLEEVE ANCHOR WITH 1-1/2" MIN EMBED, 2-1/4" MIN EDGE DISTANCE.
   3/8" HILTI HLC SLEEVE ANCHOR WITH 1-1/4" MIN EMBED, 4" MIN EDGE DISTANCE
   5. 3/8" LAG SCREWS SHALL HAVE 2" MIN EMBED & 1-1/2" MIN EDGE DISTANCE.
   3/16" TAPCONS W/ 1 1/2" MIN. EMBEDMENT & 2 1/2" MIN. EDGE DISTANCE.
6. MINIMUM EMBEDMENT AND EDGE DISTANCE EXCLUDES STUCCO, FOAM, BRICK, AND OTHER WALL FINISHES.
7. CONCRETE HOST STRUCTURE SHALL HAVE 3,000 PSI MIN COMPRESSIVE STRENGTH. GROUT-FILLED MASONRY SHALL BE ASTM C90 BLOCK WITH MIN 2,000 PSI GROUT.
8. WOOD HOST STRUCTURE SHALL BE "SOUTHERN PINE" G=0.55 OR GREATER DENSITY.
9. WHERE EXISTING STRUCTURE IS WOOD FRAMING, EXISTING CONDITIONS MAY VARY. FIELD VERIFY THAT FASTENERS ARE INTO ADEQUATE WOOD FRAMING MEMBERS, NOT INTO PLYWOOD (U.N.O.).
10. "STEEL" SUBSTRATE SHALL HAVE 18ga (0.048") MIN THICKNESS.
11. MACHINE SCREWS USED WITH SLEEVE ANCHORS SHALL HAVE MINIMUM OF 1/2" ENGAGEMENT OF THREADS IN BASE ANCHOR.
12. MASONRY WIRE ANCHORS ARE ONLY APPLICABLE AT JAMBS.

FLORIDA BUILDING CODE (HIGH & NON HIGH VELOCITY HURRICANE ZONE)

ANCHOR DETAILS:

WALTER A. TILLIT JR. LICENSE No. 44167 STATE OF FLORIDA PROFESSIONAL ENGINEER

©2023 TILTECO, INC.

TILTECO INC.
TILLIT TESTING & ENGINEERING COMPANY
6335N.W. 36th. St., Ste. 305, VIRGINIA GARDENS, Fl. 33166
Phone : (305)871-1530 . Fax : (305)871-1531
e-mail: tilteco@aol.com
CA-0006719
WALTER A. TILLIT Jr. P.E.
FLORIDA Lic. # 44167

DOUBLE & SINGLE SERIES 8080 & 4080 OUTSWING COMMERCIAL GALVANNEAL OR STAINLESS STEEL FRAME DOOR FLUSH OR EMBOSSED

DAYBAR INDUSTRIES LTD
50 WEST DRIVE, BRAMPTON, ON CANADA, L6T 2J4
TEL: 905 625-8000
FAX: 905 625-4204

REV. No	DESCRIPTION	DATE	REV. No	DESCRIPTION	DATE
1	OLD 20-156	08/17/2023	3		
2			4		

DRAWN BY: Y.M.
08/17/2023 DATE
23-179 DRAWING No
SHEET 10 OF 10