Product Approval
USER: Public User

FL #	FL22527-R12
Application Type	Revision
Code Version	2023
Application Status	Approved
Comments	
Archived	☐
Product Manufacturer	E.S. Windows, Inc.
Address/Phone/Email	10653 NE Quaybridge Ct. Miami, FL 33138 (305) 624-7775 achamorro@eswllc.com
Authorized Signature	Jalal Farooq veronica@afceng.com
Technical Representative	Samir Sabagh
Address/Phone/Email	3550 NW 49th St. Miami, FL 33142 (305) 638-5151 ssabagh@energiasolarsa.com
Quality Assurance Representative	
Address/Phone/Email	
Category	Exterior Doors
Subcategory	Swinging Exterior Door Assemblies
Compliance Method	Evaluation Report from a Florida Registered Architect or a Licensed Florida Professional Engineer ☐ Evaluation Report - Hardcopy Received
Florida Engineer or Architect Name who developed the Evaluation Report	Jalal Farooq
Florida License	PE-81223
Quality Assurance Entity	Keystone Certifications, Inc.
Quality Assurance Contract Expiration Date	07/16/2025
Validated By	Abel Carrasco, PE ☑ Validation Checklist - Hardcopy Received
Certificate of Independence	FL22527_R12_COI_SS - Certificate of Independence 2022.pdf

Referenced Standard and Year (of Standard)

Standard	Year
ASTM E1886	2013
ASTM E1996	2017
TAS 201	1994
TAS 202	1994
TAS 203	1994

Equivalence of Product Standards Certified By	Florida Licensed Professional Engineer or Architect FL22527_R12_Equiv_SS - Equiv Ltr ASTM E1886-1996.pdf

Sections from the Code

Product Approval Method	Method 1 Option D
Date Submitted	08/01/2023
Date Validated	09/05/2023
Date Pending FBC Approval	09/08/2023
Date Approved	10/17/2023

Summary of Products

FL #	Model, Number or Name	Description
22527.1	Series ES-9000 Aluminum Outswing French Door	Large missile impact resistant aluminum outswing door
Limits of Use **Approved for use in HVHZ:** Yes **Approved for use outside HVHZ:** Yes **Impact Resistant:** Yes **Design Pressure:** +120/-130 **Other:** See attached drawing W17-91 for installation instructions.		**Installation Instructions** FL22527_R12_II_SS- 9000 OS ED (LMI) - DWG W17-91 2023.1.pdf Verified By: Jalal Farooq PE# 81223 Created by Independent Third Party: Yes **Evaluation Reports** FL22527_R12_AE_SS - 9000 OS Door (LMI)-PAE 2023.pdf Created by Independent Third Party: Yes
22527.2	Series ES-9000-10 Aluminum Outswing French Door	Large missile impact resistant aluminum outswing door.
Limits of Use **Approved for use in HVHZ:** Yes **Approved for use outside HVHZ:** Yes **Impact Resistant:** Yes **Design Pressure:** +114/-114 **Other:** See attached drawing 18-58F for installation instructions.		**Installation Instructions** FL22527_R12_II_9000-10 OS Door (LMI) - DWG 18-58F (2023.1).pdf Verified By: Jalal Farooq PE #81223 Created by Independent Third Party: Yes **Evaluation Reports** FL22527_R12_AE_SS - 9000-10 OS Door (LMI)-PAE 2023.pdf Created by Independent Third Party: Yes
22527.3	Series ES-9100 Aluminum Outswing Door	Small missile impact resistant aluminum outswing door.
Limits of Use **Approved for use in HVHZ:** Yes **Approved for use outside HVHZ:** Yes **Impact Resistant:** Yes **Design Pressure:** +120/-150 **Other:** See attached drawing W17-56 for installation instructions.		**Installation Instructions** FL22527_R12_II_SS- 9100 OS Door (SMI) - DWG W17-56 (2023.1).pdf Verified By: Jalal Farooq PE # 81223 Created by Independent Third Party: Yes **Evaluation Reports** FL22527_R12_AE_SS - 9100 OS Door (SMI)-PAE 2023.pdf Created by Independent Third Party: Yes

Back Next

Contact Us :: 2601 Blair Stone Road, Tallahassee FL 32399 Phone: 850-487-1824

The State of Florida is an AA/EEO employer. Copyright 2007-2013 State of Florida. :: Privacy Statement :: Accessibility Statement :: Refund Statement

Under Florida law, email addresses are public records. If you do not want your e-mail address released in response to a public-records request, do not send electronic mail to this entity. Instead, contact the office by phone or by traditional mail. If you have any questions, please contact 850.487.1395. *Pursuant to Section 455.275(1), Florida Statutes, effective October 1, 2012, licensees licensed under Chapter 455, F.S. must provide the Department with an email address if they have one. The emails provided may be used for official communication with the licensee. However email addresses are public record. If you do not wish to supply a personal address, please provide the Department with an email address which can be made available to the public. To determine if you are a licensee under Chapter 455, F.S., please click here .

Product Approval Accepts:

Credit Card Safe securityMETRICS

SERIES 9000
ALUMINUM OUTSWING ENTRANCE DOOR

SEE SHEET 2 FOR DESIGN LOAD CAPACITY OF SINGLE DOORS WITH OR WITHOUT TRANSOMS.

SEE SHEETS 3 & 4 FOR DESIGN LOAD CAPACITY OF DOUBLE DOORS WITH OR WITHOUT TRANSOMS.

SEE SHEET 5 FOR DESIGN LOAD CAPACITY OF SINGLE AND DOUBLE DOORS WITHOUT TRANSOMS WITH ADDITIONAL OPTIONS.

SEE SHEET 6 FOR DESIGN LOAD CAPACITY OF SINGLE DOORS WITHOUT TRANSOMS WITH HIGHER LOAD CAPACITY.

DOORS CAN ALSO BE USED WITH E.S. WINDOWS SERIES ES-8000, ES-8000T OR SERIES 9500 STOREFRONT SYSTEMS UNDER SEPARATE APPROVAL. DOOR MULLION ATTACHMENT, END LOAD AND CAPACITY TO BE REVIEWED BY BUILDING OFFICIAL.

DOORS WITH STANDARD, SADDLE AND MEDIUM THRESHOLDS ARE NOT APPROVED FOR INSTALLATIONS WHERE WATER INFILTRATION RESISTANCE IS REQUIRED. DOORS USING ES-9026 (HIGH THRESHOLD OPTION) ARE APPROVED FOR WATER INFILTRATION RESISTANCE.
SEE SHEETS 8 & 9 FOR DETAILS.

THIS PRODUCT HAS BEEN DESIGNED AND TESTED TO COMPLY WITH THE REQUIREMENTS OF THE 2020 (7TH EDITION)/2023 (8TH EDITION) FLORIDA BUILDING CODE INCLUDING HIGH VELOCITY HURRICANE ZONE (HVHZ).

1BY OR 2BY WOOD BUCKS & BUCK FASTENERS BY OTHERS, MUST BE DESIGNED AND INSTALLED ADEQUATELY TO TRANSFER APPLIED PRODUCT LOADS TO THE BUILDING STRUCTURE.

ANCHORS SHALL BE CORROSION RESISTANT, SPACED AS SHOWN ON DETAILS AND INSTALLED PER MANUF'S INSTRUCTIONS. SPECIFIED EMBEDMENT TO BASE MATERIAL SHALL BE BEYOND WALL DRESSING OR STUCCO.

A LOAD DURATION INCREASE IS USED IN DESIGN OF ANCHORS INTO WOOD ONLY.

ALL SHIMS TO BE HIGH IMPACT, NON-METALLIC AND NON-COMPRESSIBLE.

MATERIALS INCLUDING BUT NOT LIMITED TO STEEL/METAL SCREWS, THAT COME INTO CONTACT WITH OTHER DISSIMILAR MATERIALS SHALL MEET THE REQUIREMENTS OF THE 2020/2023 FLORIDA BLDG. CODE & ADOPTED STANDARDS.

THIS PRODUCT APPROVAL IS GENERIC AND DOES NOT PROVIDE INFORMATION FOR A SITE SPECIFIC PROJECT, i.e. LIFE SAFETY OF THIS PRODUCT, ADEQUACY OF STRUCTURE RECEIVING THIS PRODUCT AND SEALING AROUND OPENING FOR WATER INFILTRATION RESISTANCE ETC.
CONDITIONS NOT SHOWN IN THIS DRAWING ARE TO BE ANALYZED SEPARATELY, AND TO BE REVIEWED BY BUILDING OFFICIAL.

DESIGN LOADS SHOWN ARE BASED ON 'ALLOWABLE STRESS DESIGN (ASD)'.

MANUFACTURER'S LABEL SHALL BE LOCATED ON A READILY VISIBLE LOCATION IN ACCORDANCE WITH SECTION 1709.9.3 OF FLORIDA BUILDING CODE. LABELING TO COMPLY WITH SECTION 1709.9.2.

GLASS D.L.O. DIMS.

D.L.O. HEIGHT (DOOR) = FRAME HEIGHT – 15.250" (STD. THRESHOLD)
D.L.O. HEIGHT (DOOR) = FRAME HEIGHT – 15.625" (SADDLE THRESHOLD)
D.L.O. HEIGHT (DOOR) = FRAME HEIGHT – 15.750" (MED. & HIGH THRESHOLDS)
D.L.O. WIDTH (DOOR) = FRAME WIDTH – 14.0625"

D.L.O. HEIGHT (ES-9500 TRANSOM) = TRANSOM HEIGHT – 5"
D.L.O. WIDTH (ES-9500 TRANSOM) = FRAME WIDTH – 7"

D.L.O. HEIGHT (ES-8000 TRANSOM) = TRANSOM HEIGHT – 5.5"
D.L.O. WIDTH (ES-8000 TRANSOM) = FRAME WIDTH – 5.5"

D.L.O. HEIGHT (ES-8000T TRANSOM) = TRANSOM HEIGHT – 5.5"
D.L.O. WIDTH (ES-8000T TRANSOM) = FRAME WIDTH – 5.5"

LEAF HEIGHT = FRAME HEIGHT – 2.938" (STD. THRESHOLD)
LEAF HEIGHT = FRAME HEIGHT – 2.563" (SADDLE THRESHOLD)
LEAF HEIGHT = FRAME HEIGHT – 2.438" (MED. & HIGH THRESHOLDS)
LEAF WIDTH = FRAME WIDTH – 5.188"

THESE DOORS ARE RATED FOR LARGE & SMALL MISSILE IMPACT. SHUTTERS ARE NOT REQUIRED.

NOTE:
VERIFY COMPLIANCE WITH EGRESS LIMITATIONS WHERE REQUIRED.

Sealed: 8/30/2023

FL #22527

JALAL FAROOQ
LICENSE
No. 81223
STATE OF FLORIDA
PROFESSIONAL ENGINEER

A- CONTRACTOR TO BE RESPONSIBLE FOR THE SELECTION, PURCHASE AND INSTALLATION OF THIS PRODUCT BASED ON THIS PRODUCT EVALUATION PROVIDED HE/SHE DOES NOT DEVIATE FROM THE CONDITIONS DETAILED ON THIS DOCUMENT.

B- THIS PRODUCT EVALUATION DOCUMENT WILL BE CONSIDERED INVALID IF ALTERED BY ANY MEANS.

C- SITE SPECIFIC PROJECTS SHALL BE PREPARED BY A FLORIDA REGISTERED ENGINEER OR ARCHITECT WHICH WILL BECOME THE ENGINEER OF RECORD (E.O.R.) FOR THE PROJECT AND WHO WILL BE RESPONSIBLE FOR THE PROPER USE OF THE P.E.D. ENGINEER OF RECORD, ACTING AS A DELEGATED ENGINEER TO THE P.E.D. ENGINEER SHALL SUBMIT TO THIS LATTER THE SITE SPECIFIC DRAWINGS FOR REVIEW.

D- THIS P.E.D. SHALL BEAR THE DATE AND ORIGINAL SEAL AND SIGNATURE OF THE PROFESSIONAL ENGINEER OF RECORD THAT PREPARED IT.

AL-FAROOQ CORPORATION
ENGINEERS & PRODUCT DEVELOPMENT
9360 SUNSET DRIVE, SUITE 220
MIAMI, FLORIDA 33173 (C.A.N. 3538)
TEL. (305) 264-8100 FAX. (305) 262-6978

COMP-ANL\W17-91ESW

SERIES-9000 ALUM OUTSWING FRENCH DOOR (L.M.I.)

E.S. WINDOWS, LLC
3550 N.W. 49 STREET
MIAMI, FL. 33142
TEL. (305) 638-5151 FAX. (305) 638-5158

revisions:

no	date	by	description
C	02.15.19		GENERAL REVISION
D	10.05.20		UPDATED TO 2020 FBC
E	03.17.22		THRESHOLD OPTION ADDED
F	09.29.22		ES-8000T FRAMES ADDED
G	07.25.23		SILICONE, MTG. STILE OPTION ADDED

date: 10-19-17
scale: 1/2"=1'-0"
dr. by: TARIQ
chk. by:

drawing no.
W17-91

SINGLE DOORS WITH OR WITHOUT TRANSOMS
USE CHARTS AS FOLLOWS
FOR THE CORRESPONDING DOOR SIZE

1– FOR GLASS TYPE, LOCK AND HINGE OPTIONS OBTAIN LOAD CAPACITIES FROM TABLE #D1.

2– SELECT THRESHOLD TYPE TO BE USED.
WATER RATED HIGH THRESHOLD ITEM #E2B (ES–9026) +120.0 PSF
NON WATER RATED MEDIUM THRESHOLD ITEM #E2D (ES–9000–036) +120.0 PSF
NON WATER RATED (STANDARD THRESHOLD +90.0 PSF)
NON WATER RATED (SADDLE THRESHOLD +80.0 PSF)

3– FOR JAMB ANCHORS TYPE/SHIMSPACE OBTAIN LOAD CAPACITIES FROM TABLE #J1.

4– TRANSOMS FOR SINGLE DOORS ARE LIMITED TO ±90.0 PSF * SEE ELEVATION AT RIGHT FOR TRANSOM END ANCHORS.

THE LOWEST VALUES FROM STEPS 1, 2, 3 AND 4 WILL GOVERN.

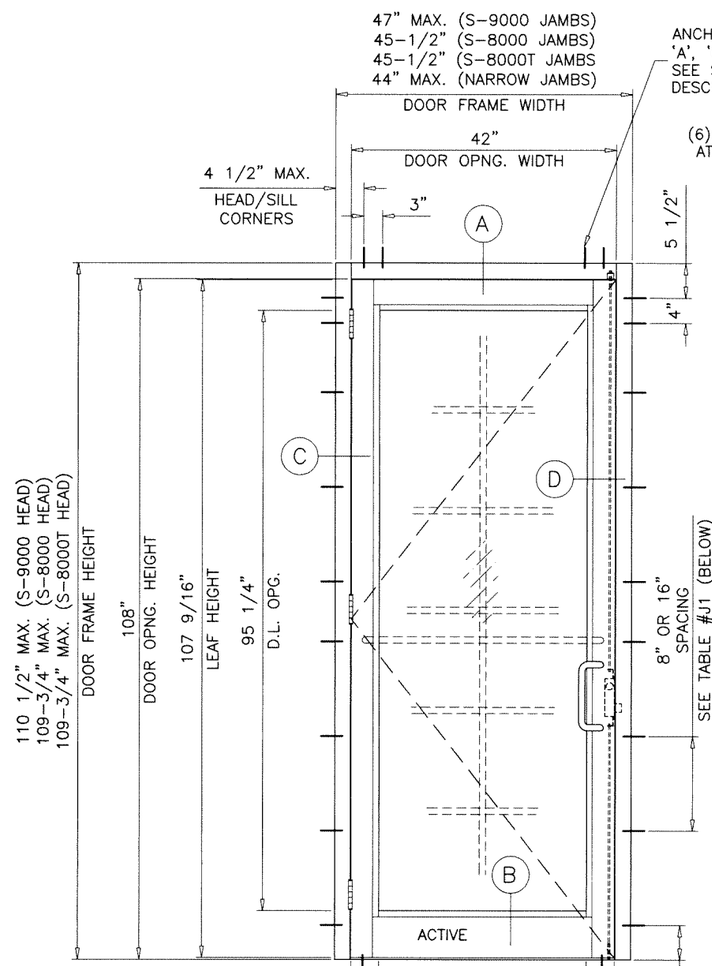

TYPICAL ELEVATION
(X)

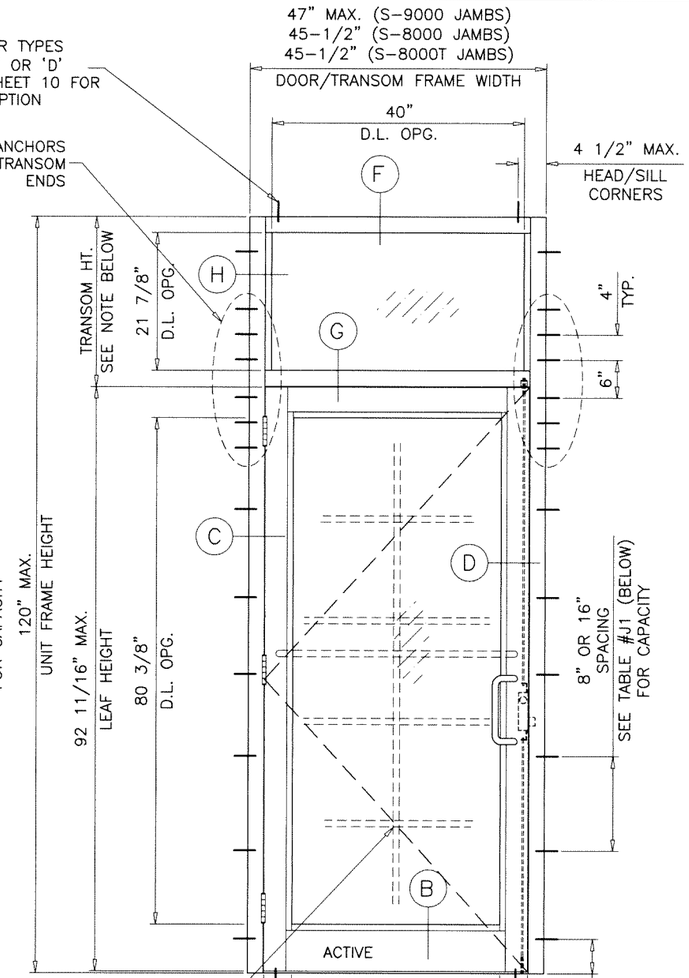

TYPICAL ELEVATION
(O/X)

TRANSOM HEIGHTS:
27" MAX. FOR S–8000 TRANSOM
36" MAX. FOR S–8000T TRANSOM

TABLE #D1 — DOORS LOAD CAPACITY – PSF
SINGLE DOORS WITHOUT TRANSOM (X) OR WITH TRANSOM* (O/X)

DOOR DIMS.		GLASS			LOCKS			HINGES		
		TYPE 'A'	TYPE 'B'/'C'	TYPE 'A.2'/'C.1'/'D'	OPTION #1	OPTION #2/2.1	OPTION #3	OPTION #1	OPTION #2	OPTION #3
DOOR OPG. WIDTH	DOOR OPG. HEIGHT	EXT. (+) INT. (–)	EXT. (+) INT. (–)	EXT. (+) INT. (–)	EXT. (+) INT. (–)	EXT. (+) INT. (–)	EXT. (+) INT. (–)	EXT. (+) INT. (–)	EXT. (+) INT. (–)	EXT. (+) INT. (–)
42"	96"	80.0	120.0	90.0	80.0	90.0	120.0	80.0	120.0	90.0
42"	108"	80.0	120.0	90.0	80.0	90.0	120.0	80.0	120.0	90.0

SINGLE DOORS WITH SADDLE THRESHOLD LIMITED TO +80.0, –80.0 PSF

SEE SHEET 7 FOR GLASS TYPES DESCRIPTION
SEE SHEET 16 FOR LOCKS AND HINGES DESCRIPTION

TABLE #J1 — JAMB ANCHORS LOAD CAPACITY – PSF (NOT APPLICABLE AT TRANSOM ENDS SEE NOTE 4)
SINGLE DOORS WITHOUT TRANSOM (X) OR WITH TRANSOM (O/X)

DOOR DIMS.		1/4" SHIM SPACE						3/8" SHIM SPACE				1/2" SHIM SPACE			
		SPACING AT 16" O.C.			SPACING AT 8" O.C.			AT 16" O.C.		AT 8" O.C.		AT 16" O.C.		AT 8" O.C.	
		ANCHOR 'A'	ANCHOR 'C'	ANCHOR 'D'	ANCHOR 'A'	ANCHOR 'C'	ANCHOR 'D'	ANCHOR 'A'	ANCHOR 'C'	ANCHOR 'A'	ANCHOR 'C'	ANCHOR 'A'	ANCHOR 'C'	ANCHOR 'A'	ANCHOR 'C'
DOOR OPG. WIDTH	DOOR OPG. HEIGHT	EXT.(+) INT.(–)	EXT.(+) INT.(–)	EXT.(+) INT.(–)	EXT.(+) INT.(–)	EXT.(+) INT.(–)	EXT.(+) INT.(–)	EXT.(+) INT.(–)	EXT.(+) INT.(–)	EXT.(+) INT.(–)	EXT.(+) INT.(–)	EXT.(+) INT.(–)	EXT.(+) INT.(–)	EXT.(+) INT.(–)	EXT.(+) INT.(–)
35"	108"	112.5	120.0	120.0	120.0	120.0	120.0	82.5	82.5	120.0	120.0	64.2	92.7	120.0	120.0
42"	108"	95.7	111.0	120.0	120.0	120.0	120.0	70.2	100.0	120.0	120.0	54.6	78.9	109.2	120.0

SEE SHEET 10 FOR ANCHOR DESCRIPTION

NOTE:
GLASS CAPACITIES ON THIS SHEET ARE BASED ON ASTM E1300–09 (3 SEC. GUSTS) AND FLORIDA BUILDING COMMISSION DECLARATORY STATEMENT DCA05–DEC–219

Sealed: 8/30/2023

JALAL FAROOQ LICENSE No. 81223 STATE OF FLORIDA PROFESSIONAL ENGINEER

FL #22527

AL-FAROOQ CORPORATION
ENGINEERS & PRODUCT DEVELOPMENT
9360 SUNSET DRIVE, SUITE 220
MIAMI, FLORIDA 33173 (C.A.N. 3538)
TEL. (305) 264-8100 FAX. (305) 262-6978

COMP–ANL\W17–91ESW

SERIES–9000 ALUM OUTSWING FRENCH DOOR (L.M.I.)

E.S. WINDOWS, LLC
3550 N.W. 49 STREET
MIAMI, FL. 33142
TEL. (305) 638–5151 FAX. (305) 638–5158

revisions:

no	date	by	description

date: 10–19–17
scale: 1/2"=1'–0"
dr. by: TARIQ
chk. by:

drawing no. W17–91

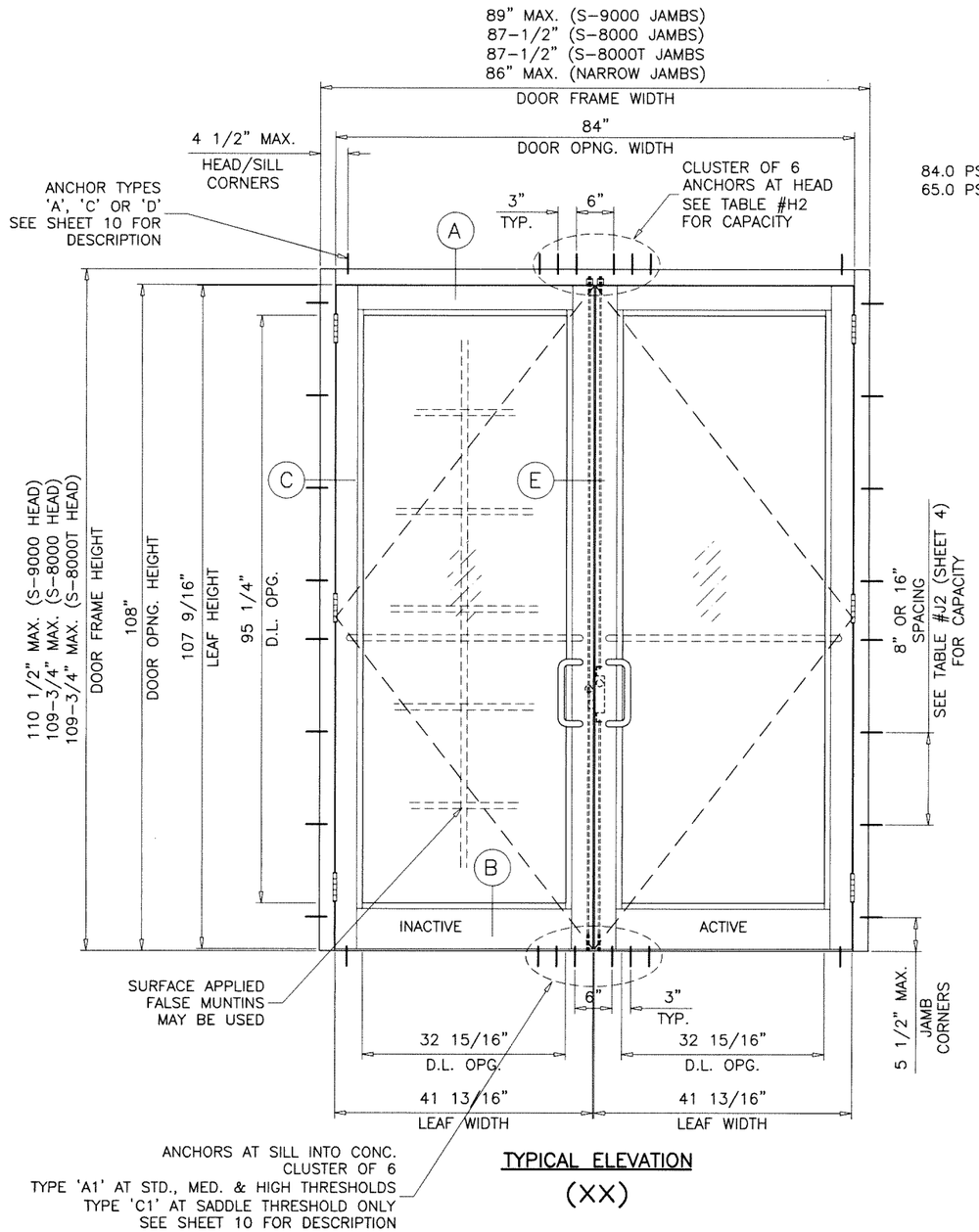

TYPICAL ELEVATION
(XX)

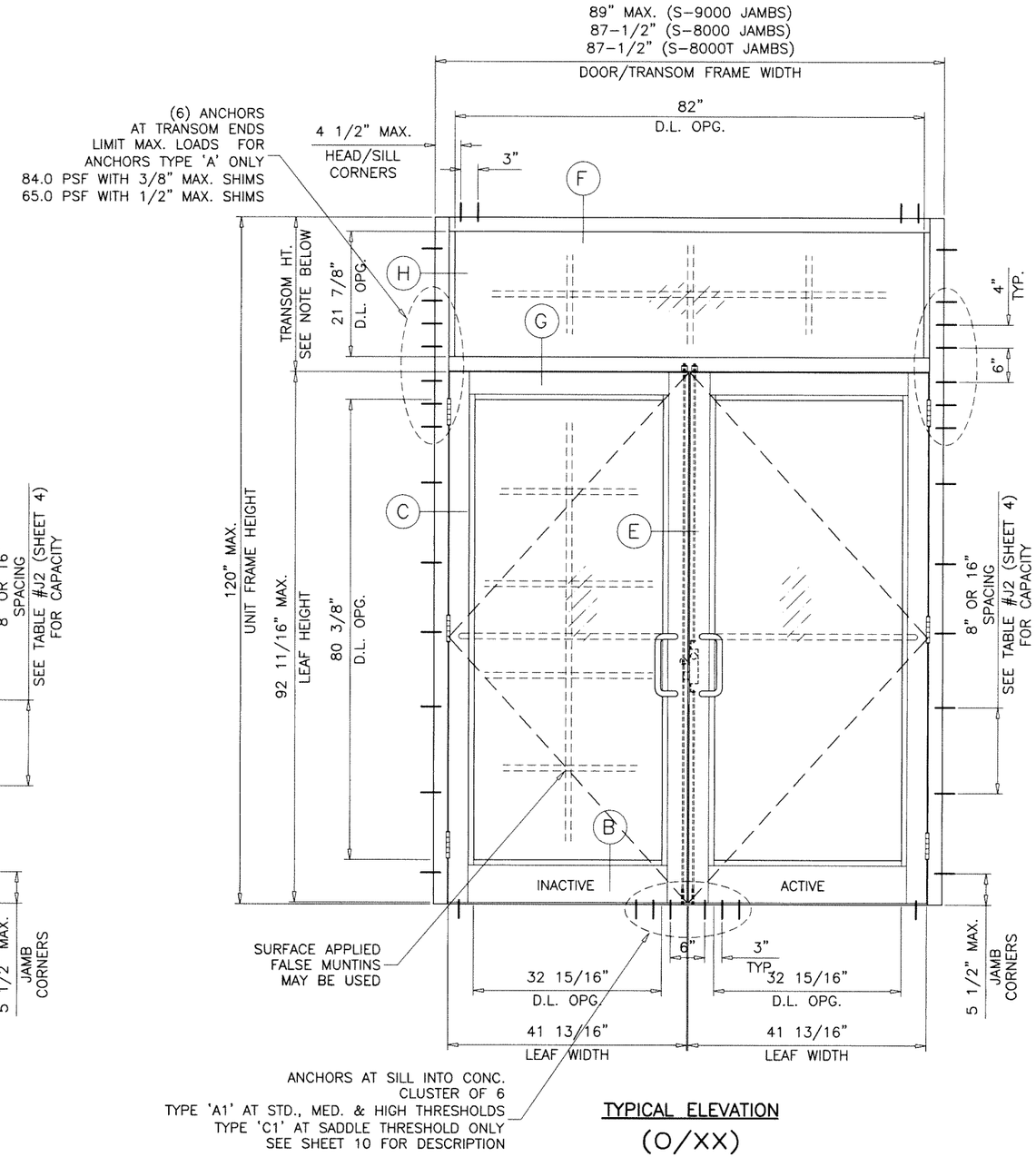

TYPICAL ELEVATION
(O/XX)

SEE CHARTS ON SHEET 4 FOR DOUBLE DOOR AND TRANSOM LOAD CAPACITY

TRANSOM HEIGHTS:
27" MAX. FOR S-8000 TRANSOM
36" MAX. FOR S-8000T TRANSOM

Sealed: 8/30/2023

JALAL FAROOQ LICENSE No. 81223 STATE OF FLORIDA PROFESSIONAL ENGINEER

FL #22527

AL-FAROOQ CORPORATION
ENGINEERS & PRODUCT DEVELOPMENT
9360 SUNSET DRIVE, SUITE 220
MIAMI, FLORIDA 33173 (C.A.N. 3538)
TEL. (305) 264-8100 FAX. (305) 262-6978

COMP-ANL\W17-91ESW

SERIES-9000 ALUM OUTSWING FRENCH DOOR (L.M.I.)

E.S. WINDOWS, LLC
3550 N.W. 49 STREET
MIAMI, FL. 33142
TEL. (305) 638-5151 FAX. (305) 638-5158

revisions:			
no	date	by	description

date: 10-19-17
scale: 1/2"=1'-0"
dr. by: TARIQ
chk. by:

drawing no. W17-91

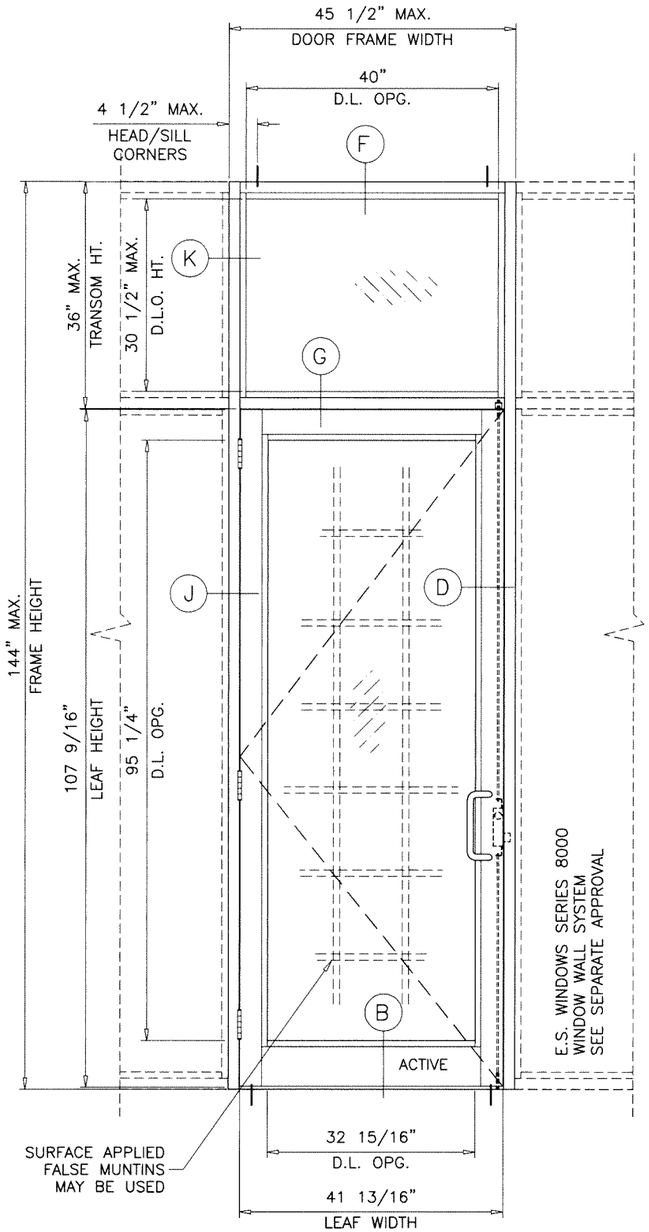

TYPICAL ELEVATION
SINGLE (O/X)
(ES-8000 TRANSOM)

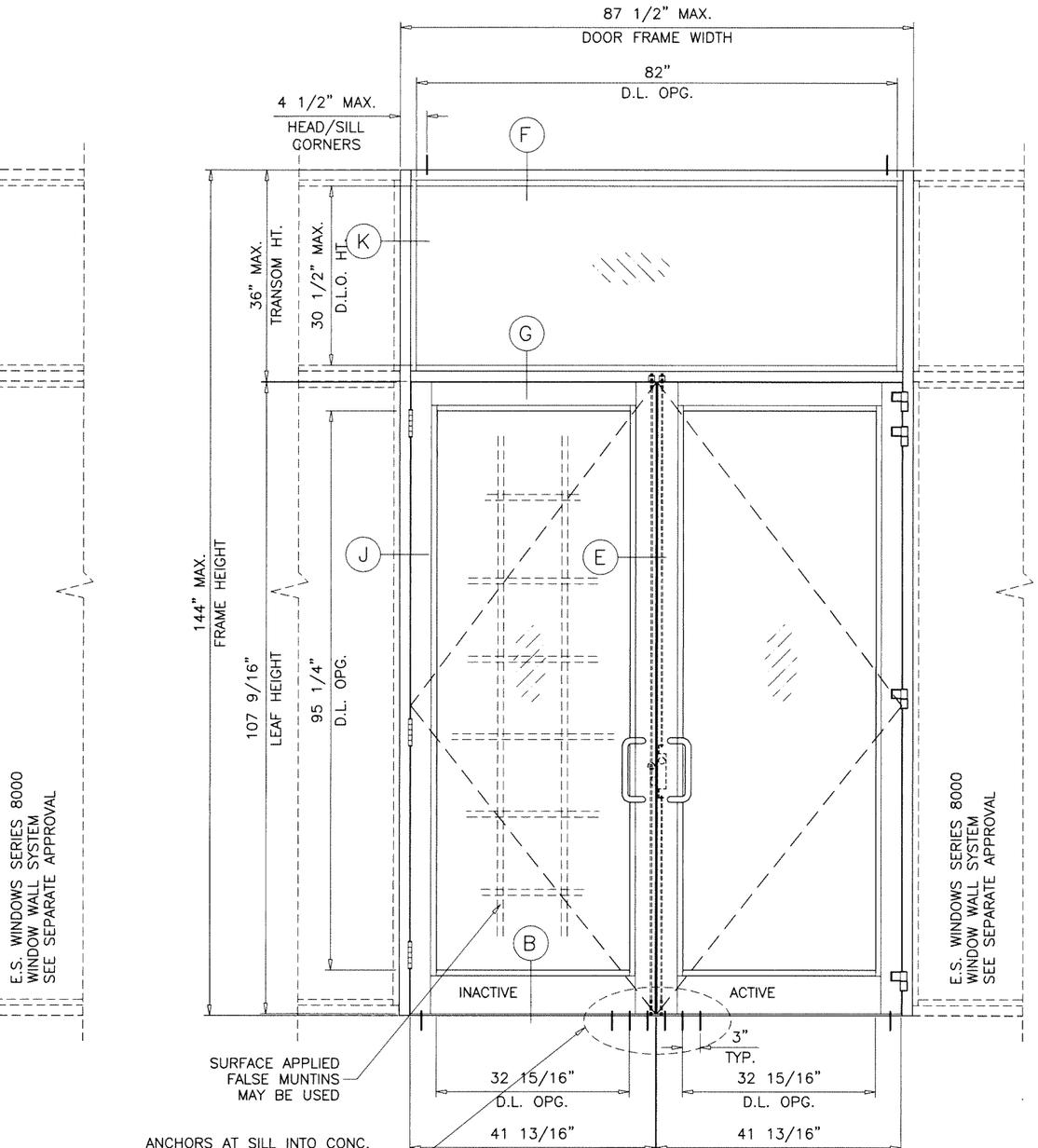

TYPICAL ELEVATION
DOUBLE (O/XX)
(ES-8000 TRANSOM)

SINGLE (O/X) AND DOUBLE (O/XX) DOORS WITH 36" MAX. TRANSOM HEIGHTS
APPROVED WITH ES-8000 WINDOW WALL SYSTEM ONLY
LIMIT MAX. DESIGN LOADS TO ±90.0 PSF
GLASS AT TRANSOM TYPE 'B' ONLY

Sealed: 8/30/2023

JALAL FAROOQ
LICENSE
No. 81223
STATE OF FLORIDA
PROFESSIONAL ENGINEER

FL #22527

AL-FAROOQ CORPORATION
ENGINEERS & PRODUCT DEVELOPMENT
9360 SUNSET DRIVE, SUITE 220
MIAMI, FLORIDA 33173 (C.A.N. 3538)
TEL. (305) 264-8100 FAX. (305) 262-6978

COMP-ANL\W17-91ESW

SERIES-9000 ALUM OUTSWING FRENCH DOOR (L.M.I.)

E.S. WINDOWS, LLC
3550 N.W. 49 STREET
MIAMI, FL. 33142
TEL. (305) 638-5151 FAX. (305) 638-5158

revisions:

no	date	by	description

date: 10-19-17
scale: 1/2"=1'-0"
dr. by: TARIQ
chk. by:

drawing no.
W17-91

sheet 3.1 of 18

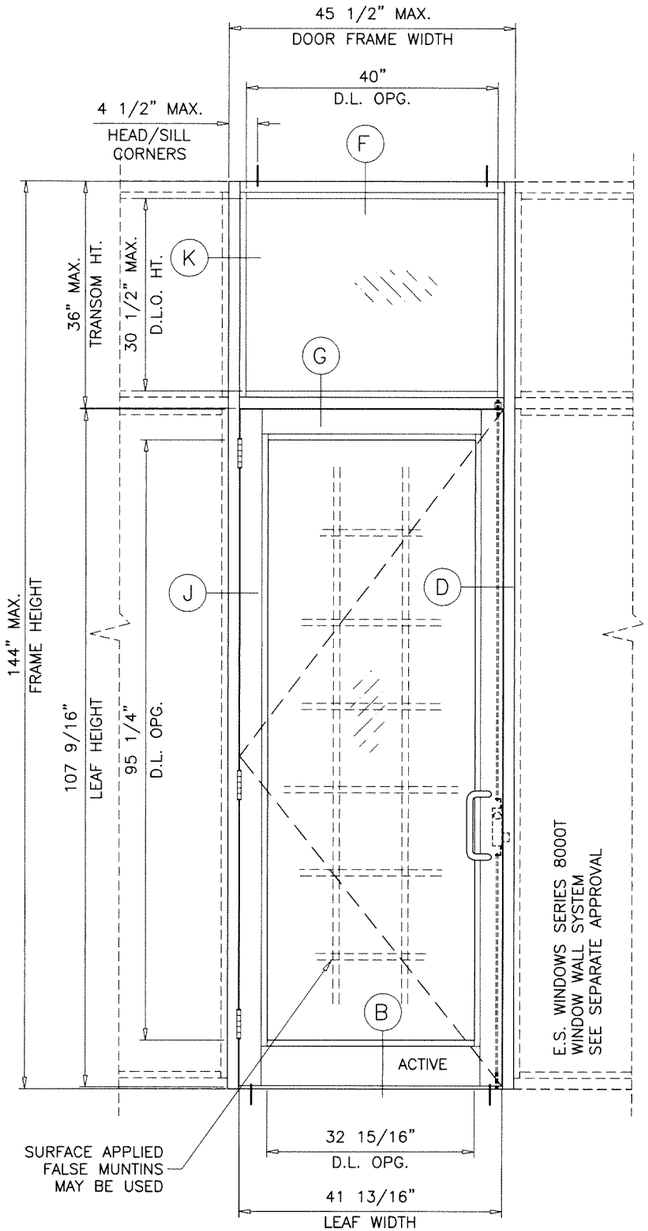

TYPICAL ELEVATION
SINGLE (O/X)
(ES-8000T TRANSOM)

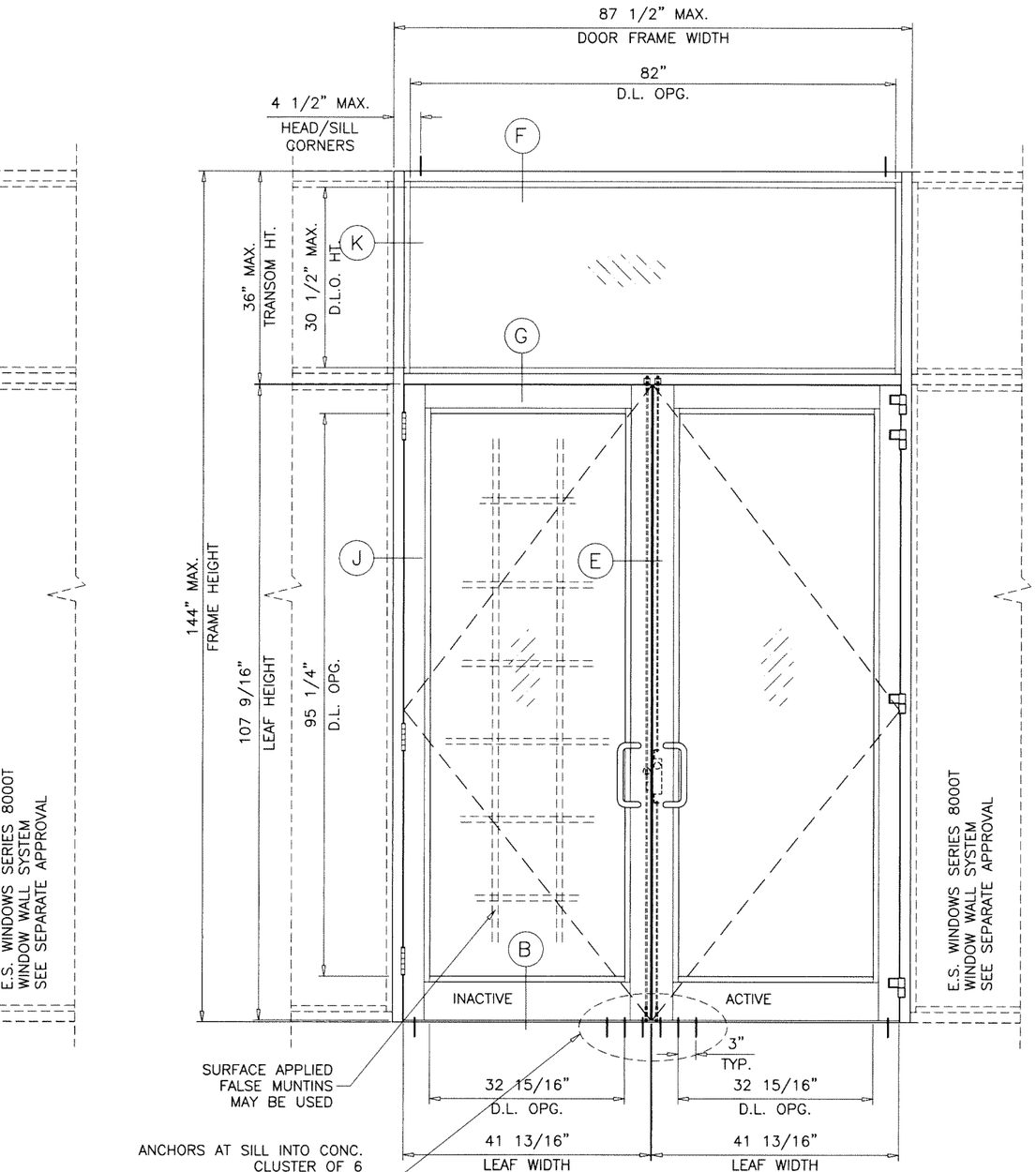

TYPICAL ELEVATION
DOUBLE (O/XX)
(ES-8000T TRANSOM)

SINGLE (O/X) AND DOUBLE (O/XX) DOORS WITH 36" MAX. TRANSOM HEIGHTS
APPROVED WITH ES-8000T WINDOW WALL SYSTEM ONLY
MAX. DESIGN LOADS TO ±75.0 PSF (UNREINFORCED HORIZONTAL)
MAX. DESIGN LOADS TO +80.0, -90.0 PSF (REINFORCED HORIZONTAL)
SEE SHEET 12 FOR REINFORCING DETAIL
GLASS AT TRANSOM TYPE 'E' & 'E-R' ONLY

Sealed: 8/30/2023

JALAL FAROOQ
LICENSE
No. 81223
STATE OF FLORIDA
PROFESSIONAL ENGINEER

FL #22527

AL-FAROOQ CORPORATION
ENGINEERS & PRODUCT DEVELOPMENT
9360 SUNSET DRIVE, SUITE 220
MIAMI, FLORIDA 33173 (C.A.N. 3538)
TEL. (305) 264-8100 FAX. (305) 262-6978
COMP-ANL\W17-91ESW

SERIES-9000 ALUM OUTSWING FRENCH DOOR (L.M.I.)

E.S. WINDOWS, LLC
3550 N.W. 49 STREET
MIAMI, FL. 33142
TEL. (305) 638-5151 FAX. (305) 638-5158

revisions:

no	date	by	description

date: 10-19-17
scale: 1/2"=1'-0"
dr. by: TARIQ
chk. by:

drawing no.
W17-91

DOUBLE DOORS WITH OR WITHOUT TRANSOMS
USE CHARTS AS FOLLOWS
FOR THE CORRESPONDING DOOR SIZE

1– FOR GLASS TYPE, LOCK AND HINGE OPTIONS
OBTAIN LOAD CAPACITIES FROM TABLE #D2.

2– SELECT THRESHOLD TYPE TO BE USED.
WATER RATED HIGH THRESHOLD ITEM #E2B (ES–9026) +90.0 PSF
NON WATER RATED MEDIUM THRESHOLD ITEM #E2D (ES–9000–036) +90.0 PSF
NON WATER RATED (STANDARD THRESHOLD +90.0 PSF)
NON WATER RATED (SADDLE THRESHOLD +80.0 PSF)

3– FOR JAMB ANCHORS TYPE/SHIMSPACE OBTAIN
LOAD CAPACITIES FROM TABLE #J2.
SEE ELEVATION ON SHEET 3 FOR TRANSOM END ANCHORS.
(MIN. 6 ANCHORS REQD. IN ALL CASES)

4– FOR HEAD ANCHORS, TYPE/SHIMSPACE OBTAIN
LOAD CAPACITIES FROM TABLE #H2.

THE LOWEST VALUES FROM STEPS 1, 2, 3
AND 4 WILL GOVERN.

TABLE #D2 — DOORS LOAD CAPACITY – PSF
DOUBLE DOOR WITHOUT TRANSOM (XX) OR WITH TRANSOM (O/XX)

DOOR DIMS.		GLASS			LOCKS				HINGES	
		TYPE 'A'	TYPE 'B'/'C'	TYPE 'A.2'/'C.1'/'D'	OPTION #1	OPTION #2	OPTION #2.1	OPTION #3	OPTION #1	OPTION #2/3
DOOR OPG. WIDTH	DOOR OPG. HEIGHT	EXT. (+) INT. (–)	EXT. (+) INT. (–)	EXT. (+) INT. (–)	EXT. (+) INT. (–)	EXT. (+) INT. (–)	EXT. (+) INT. (–)	EXT. (+) INT. (–)	EXT. (+) INT. (–)	EXT. (+) INT. (–)
84"	96"	80.0	90.0	90.0	80.0	90.0	90.0	90.0	80.0	90.0
84"	108"	80.0	90.0	90.0	80.0	80.0	90.0	80.0	80.0	90.0

DOUBLE DOORS WITH SADDLE THRESHOLD LIMITED TO +80.0, –80.0 PSF

SEE SHEET 7 FOR GLASS TYPES DESCRIPTION
SEE SHEET 16 FOR LOCKS AND HINGES DESCRIPTION

TABLE #J2 — JAMB ANCHORS LOAD CAPACITY – PSF (NOT APPLICABLE AT TRANSOM ENDS SEE NOTE 3)
DOUBLE DOORS WITHOUT TRANSOM (XX) OR WITH TRANSOM (O/XX)

DOOR DIMS.		1/4" SHIM SPACE						3/8" SHIM SPACE				1/2" SHIM SPACE			
		SPACING AT 16" O.C.			SPACING AT 8" O.C.			AT 16" O.C.		AT 8" O.C.		AT 16" O.C.		AT 8" O.C.	
		ANCHOR 'A'	ANCHOR 'C'	ANCHOR 'D'	ANCHOR 'A'	ANCHOR 'C'	ANCHOR 'D'	ANCHOR 'A'	ANCHOR 'C'	ANCHOR 'A'	ANCHOR 'C'	ANCHOR 'A'	ANCHOR 'C'	ANCHOR 'A'	ANCHOR 'C'
DOOR OPG. WIDTH	DOOR OPG. HEIGHT	EXT.(+) INT.(–)	EXT.(+) INT.(–)	EXT.(+) INT.(–)	EXT.(+) INT.(–)	EXT.(+) INT.(–)	EXT.(+) INT.(–)	EXT.(+) INT.(–)	EXT.(+) INT.(–)	EXT.(+) INT.(–)	EXT.(+) INT.(–)	EXT.(+) INT.(–)	EXT.(+) INT.(–)	EXT.(+) INT.(–)	EXT.(+) INT.(–)
70"	108"	90.0	90.0	90.0	90.0	90.0	90.0	88.0	90.0	90.0	90.0	68.4	90.0	90.0	90.0
84"	108"	90.0	88.7	90.0	90.0	90.0	90.0	74.2	88.7	90.0	90.0	57.7	83.3	90.0	90.0

SEE SHEET 10 FOR ANCHOR DESCRIPTION

TABLE #H2 — HEAD ANCHORS LOAD CAPACITY – PSF
DOUBLE DOOR WITHOUT TRANSOM (XX) OR WITH TRANSOM (O/XX)

DOOR DIMS.		1/4" SHIM SPACE			3/8" SHIM SPACE		1/2" SHIM SPACE	
		ANCHOR TYPE 'A'	ANCHOR TYPE 'C'	ANCHOR TYPE 'D'	ANCHOR TYPE 'A'	ANCHOR TYPE 'C'	ANCHOR TYPE 'A'	ANCHOR TYPE 'C'
DOOR OPG. WIDTH	DOOR OPG. HEIGHT	EXT. (+) INT. (–)	EXT. (+) INT. (–)	EXT. (+) INT. (–)	EXT. (+) INT. (–)	EXT. (+) INT. (–)	EXT. (+) INT. (–)	EXT. (+) INT. (–)
70"	96"	90.0	90.0	90.0	85.8	90.0	66.7	90.0
84"		90.0	90.0	90.0	72.3	90.0	56.2	81.2
70"	108"	90.0	90.0	90.0	76.5	90.0	59.5	85.9
84"		90.0	90.0	90.0	64.4	90.0	50.1	72.3

SEE SHEET 10 FOR ANCHOR DESCRIPTION

SILL ANCHORS DESIGN LOAD CAPACITY ALL SIZES = ± 90.0 PSF

NOTE:
GLASS CAPACITIES ON THIS SHEET ARE
BASED ON ASTM E1300–09 (3 SEC. GUSTS)
AND FLORIDA BUILDING COMMISSION
DECLARATORY STATEMENT DCA05–DEC–219

Sealed: 8/30/2023

JALAL FAROOQ
LICENSE
No. 81223
STATE OF FLORIDA
PROFESSIONAL ENGINEER

FL #22527

AL-FAROOQ CORPORATION
ENGINEERS & PRODUCT DEVELOPMENT
9360 SUNSET DRIVE, SUITE 220
MIAMI, FLORIDA 33173 (C.A.N. 3538)
TEL. (305) 264-8100 FAX. (305) 262-6978

COMP–ANL\W17–91ESW

SERIES–9000 ALUM OUTSWING FRENCH DOOR (L.M.I.)

E.S. WINDOWS, LLC
3550 N.W. 49 STREET
MIAMI, FL. 33142
TEL. (305) 638–5151 FAX. (305) 638–5158

revisions:

no	date	by	description

date: 10–19–17
scale: 1/2"=1'–0"
dr. by: TARIQ
chk. by:

drawing no.
W17–91

SINGLE OR DOUBLE DOORS WITHOUT TRANSOMS
USE CHARTS AS FOLLOWS
FOR THE CORRESPONDING DOOR SIZE

1– FOR GLASS TYPE, LOCK AND HINGE OPTIONS OBTAIN LOAD CAPACITIES FROM TABLE #D3.

2– THESE DOORS APPROVED WITH STD. THRESHOLD ONLY.

3– FOR JAMB ANCHORS TYPE/SHIMSPACE OBTAIN LOAD CAPACITIES FROM TABLE #J3.

4– FOR HEAD ANCHORS, TYPE/SHIMSPACE OBTAIN LOAD CAPACITIES FROM TABLE #H3.

THE LOWEST VALUES FROM STEPS 1, 3 AND 4 WILL GOVERN.

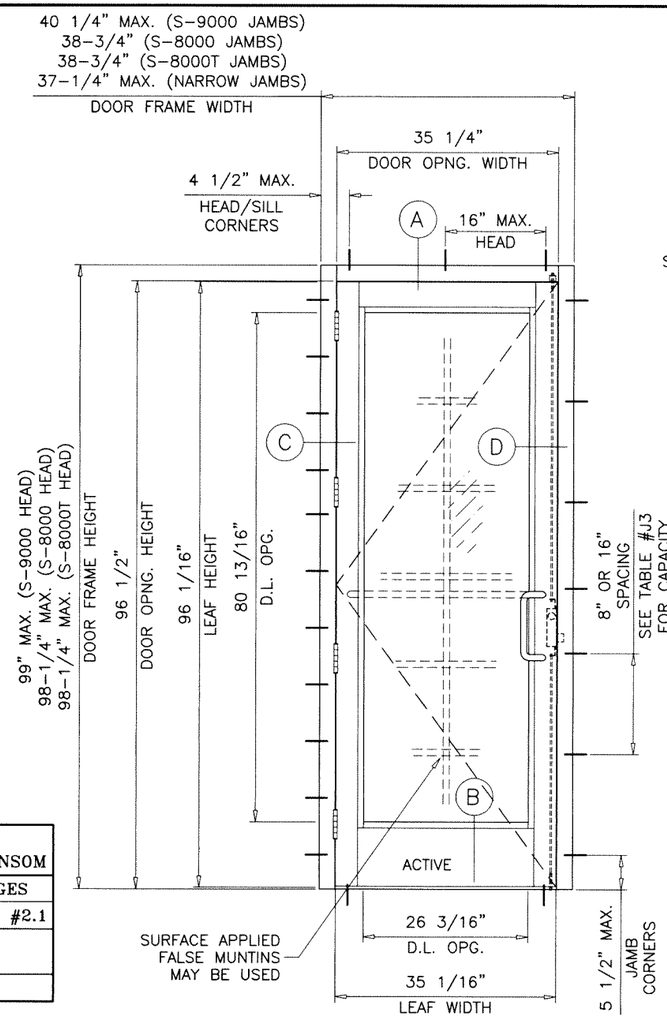

TYPICAL ELEVATION

(X)

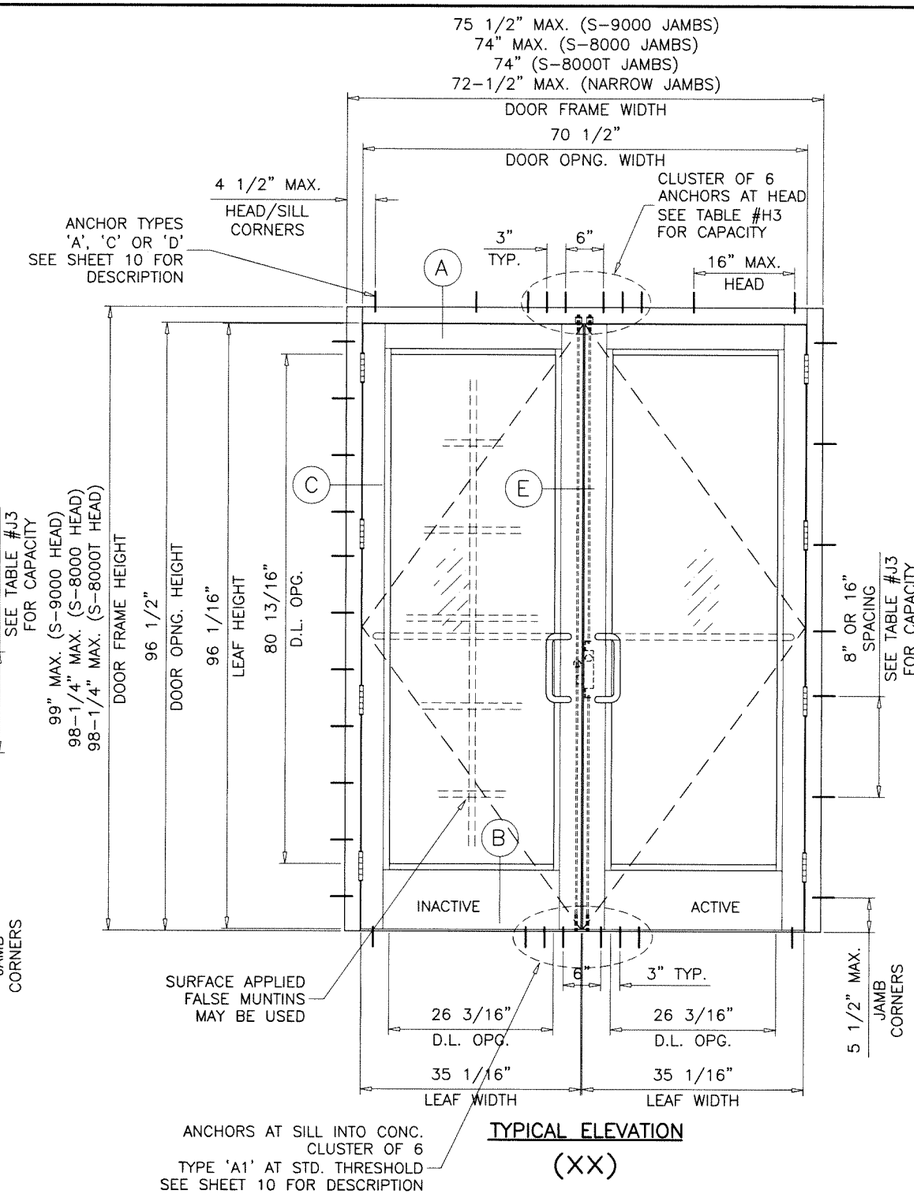

TYPICAL ELEVATION

(XX)

TABLE #D3		DOORS LOAD CAPACITY – PSF SINGLE(X) OR DOUBLE(XX) DOORS WITHOUT TRANSOM				
SINGLE DOOR(X) DIMS.		DOUBLE DOOR(XX) DIMS.		GLASS	LOCKS	HINGES
				TYPE 'A.1'	OPTION #3	OPTION #2.1
DOOR OPG. WIDTH	DOOR OPG. HEIGHT	DOOR OPG. WIDTH	DOOR OPG. HEIGHT	EXT. (+) INT. (–)		
35–1/4"	96–1/2"	70–1/2"	96–1/2"	105.3		

SEE SHEET 7 FOR GLASS TYPES DESCRIPTION
SEE SHEET 16 FOR LOCKS AND HINGES DESCRIPTION

TABLE #J3		JAMB ANCHORS LOAD CAPACITY – PSF SINGLE(X) DOUBLE(XX) DOORS WITHOUT TRANSOM							
			1/4" SHIM SPACE	3/8" SHIM SPACE			1/2" SHIM SPACE		
			SPACING AT 16" O.C.	AT 16"		AT 8" O.C.	AT 16"		AT 8" O.C.
SINGLE DOOR(X) DIMS.		DOUBLE DOOR(XX) DIMS.	ANCHOR 'A', 'C' & 'D'	ANCHOR 'A'	ANCHOR 'C'	ANCHOR 'A' & 'C'	ANCHOR 'A'	ANCHOR 'C'	ANCHOR 'A' & 'C'
DOOR OPG. WIDTH	DOOR OPG. HEIGHT	DOOR OPG. WIDTH	DOOR OPG. HEIGHT	EXT.(+) INT.(–)	EXT.(+) INT.(–)	EXT.(+) INT.(–)	EXT.(+) INT.(–)	EXT.(+) INT.(–)	EXT.(+) INT.(–)
35–1/4"	96–1/2"	70–1/2"	96–1/2"	105.3	82.0	105.3	105.3	63.8	92.1	105.3

SEE SHEET 10 FOR ANCHOR DESCRIPTION

TABLE #H3		HEAD ANCHORS LOAD CAPACITY – PSF DOUBLE DOOR WITHOUT TRANSOM(XX)				
		1/4" SHIM SPACE	3/8" SHIM SPACE		1/2" SHIM SPACE	
DOOR DIMS.		ANCHOR 'A', 'C' & 'D'	ANCHOR TYPE 'A'	ANCHOR TYPE 'C'	ANCHOR TYPE 'A'	ANCHOR TYPE 'C'
DOOR OPG. WIDTH	DOOR OPG. HEIGHT	EXT. (+) INT. (–)	EXT. (+) INT. (–)	EXT. (+) INT. (–)	EXT. (+) INT. (–)	EXT. (+) INT. (–)
70–1/2"	96–1/2"	105.3	98.9	105.3	76.9	105.3

SEE SHEET 10 FOR ANCHOR DESCRIPTION

SILL ANCHORS DESIGN LOAD CAPACITY ALL SIZES = ± 105.3 PSF

NOTE:
GLASS CAPACITIES ON THIS SHEET ARE BASED ON ASTM E1300–09 (3 SEC. GUSTS) AND FLORIDA BUILDING COMMISSION DECLARATORY STATEMENT DCA05–DEC–219

Sealed: 8/30/2023

JALAL FAROOQ LICENSE No. 81223 STATE OF FLORIDA PROFESSIONAL ENGINEER

FL #22527

AL-FAROOQ CORPORATION
ENGINEERS & PRODUCT DEVELOPMENT
9360 SUNSET DRIVE, SUITE 220
MIAMI, FLORIDA 33173
(C.A.N. 3538)
TEL. (305) 264-8100 FAX. (305) 262-6978
COMP-ANL\W17-91ESW

SERIES-9000 ALUM OUTSWING FRENCH DOOR (L.M.I.)

E.S. WINDOWS, LLC
3550 N.W. 49 STREET
MIAMI, FL. 33142
TEL. (305) 638-5151 FAX. (305) 638-5158

revisions:

no	date	by	description

date: 10-19-17
scale: 1/2"=1'-0"
dr. by: TARIQ
chk. by:

drawing no. W17-91

SINGLE DOORS WITHOUT TRANSOMS
USE CHARTS AS FOLLOWS
FOR THE CORRESPONDING DOOR SIZE

1– FOR GLASS TYPE, LOCK AND HINGE OPTIONS OBTAIN LOAD CAPACITIES FROM TABLES #D4.

2– THESE DOORS APPROVED WITH STD. THRESHOLD ONLY.

3– FOR JAMB ANCHORS TYPE/SHIMSPACE OBTAIN LOAD CAPACITIES FROM TABLE #J4.

THE LOWEST VALUES FROM STEPS 1 AND 3 WILL GOVERN.

TABLE #D4		DOORS LOAD CAPACITY – PSF SINGLE(X) DOORS WITHOUT TRANSOM					
SINGLE DOOR(X) DIMS.		GLASS TYPE 'B.1'		LOCKS OPTION #3		HINGES OPTION #2	
DOOR OPG. WIDTH	DOOR OPG. HEIGHT	EXT.(+)	INT.(–)	EXT.(+)	INT.(–)	EXT.(+)	INT.(–)
35"	93–1/2"	120.0	130.0	120.0	130.0	120.0	130.0

SEE SHEET 7 FOR GLASS TYPES DESCRIPTION
SEE SHEET 16 FOR LOCKS AND HINGES DESCRIPTION

TABLE #J4		JAMB ANCHORS LOAD CAPACITY – PSF SINGLE(X) DOORS WITHOUT TRANSOM										
SINGLE DOOR(X) DIMS.		1/4" SHIM SPACE				3/8" SHIM SPACE			1/2" SHIM SPACE			
		AT 16" O.C.			SPACING AT 8" O.C.	AT 16"		AT 8" O.C.	AT 16"		AT 8" O.C.	
		ANCHOR 'A'	ANCHOR 'C'	ANCHOR 'D'	ANCHOR 'A', 'C' & 'D'	ANCHOR 'A'	ANCHOR 'C'	ANCHOR 'A' & 'C'	ANCHOR 'A'	ANCHOR 'C'	ANCHOR 'A'	ANCHOR 'C'
DOOR OPG. WIDTH	DOOR OPG. HEIGHT	EXT.(+) INT.(–)	EXT.(+) INT.(–)	EXT.(+) INT.(–)	EXT.(+) INT.(–)	EXT.(+) INT.(–)	EXT.(+) INT.(–)	EXT.(+) INT.(–)	EXT.(+) INT.(–)	EXT.(+) INT.(–)	EXT.(+) INT.(–)	EXT.(+) INT.(–)
35"	93–1/2"	112.5	130.0	130.0	130.0	82.5	117.5	130.0	64.2	92.7	128.3	130.0

SEE SHEET 10 FOR ANCHOR DESCRIPTION

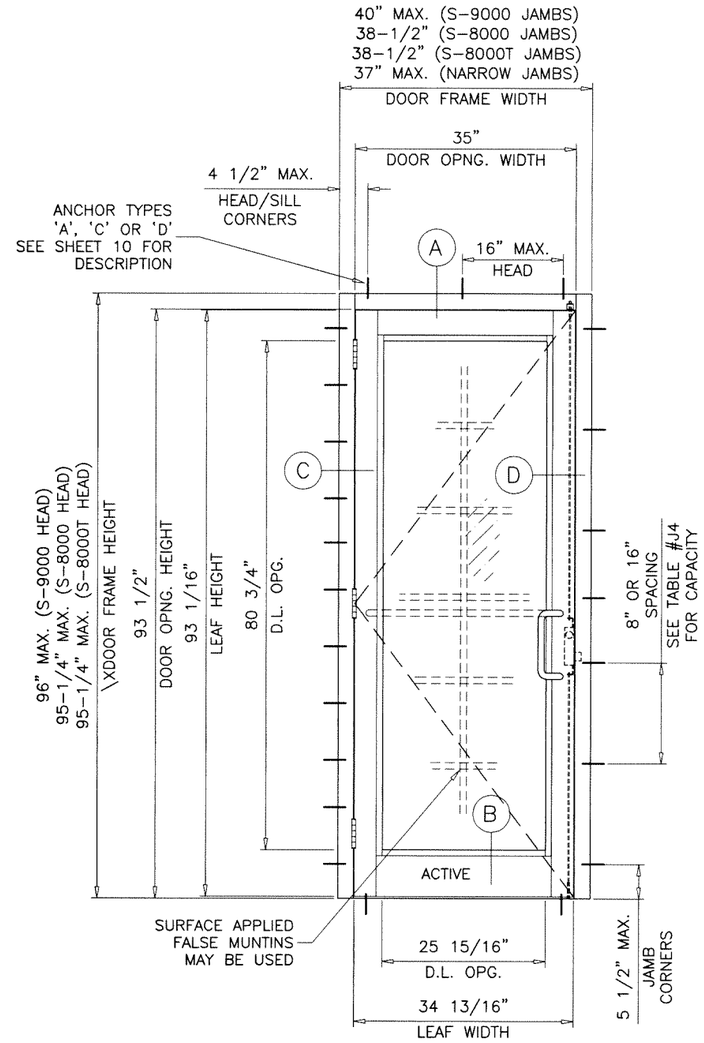

TYPICAL ELEVATION
(X)

NOTE:
GLASS CAPACITIES ON THIS SHEET ARE BASED ON ASTM E1300–09 (3 SEC. GUSTS) AND FLORIDA BUILDING COMMISSION DECLARATORY STATEMENT DCA05–DEC–219

Sealed: 8/30/2023

JALAL FAROOQ LICENSE No. 81223 STATE OF FLORIDA PROFESSIONAL ENGINEER

FL #22527

AL-FAROOQ CORPORATION
ENGINEERS & PRODUCT DEVELOPMENT
9360 SUNSET DRIVE, SUITE 220
MIAMI, FLORIDA 33173 (C.A.N. 3538)
TEL. (305) 264-8100 FAX. (305) 262-6978
COMP–ANL\W17–91ESW

SERIES–9000 ALUM OUTSWING FRENCH DOOR (L.M.I.)

E.S. WINDOWS, LLC
3550 N.W. 49 STREET
MIAMI, FL. 33142
TEL. (305) 638–5151 FAX. (305) 638–5158

revisions:

no	date	by	description

date: 10–19–17
scale: 1/2"=1'–0"
dr. by: TARIQ
chk. by:

drawing no. W17–91

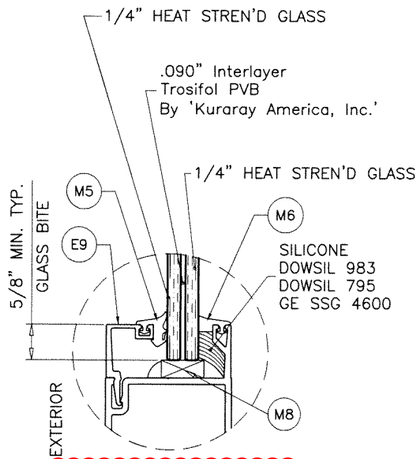

GLASS TYPE 'A'
9/16" OVERALL LAM. GLASS

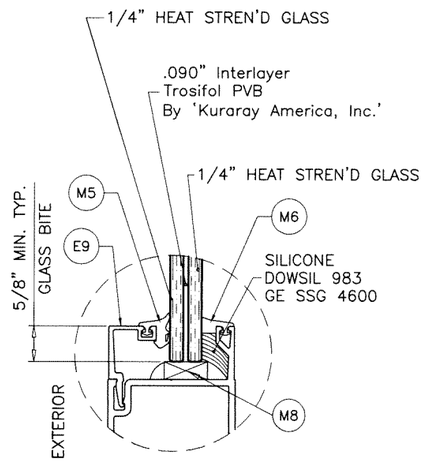

GLASS TYPE 'A.1'
9/16" OVERALL LAM. GLASS

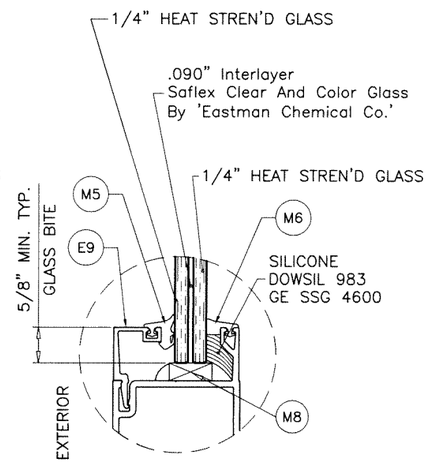

GLASS TYPE 'A.2'
9/16" OVERALL LAM. GLASS

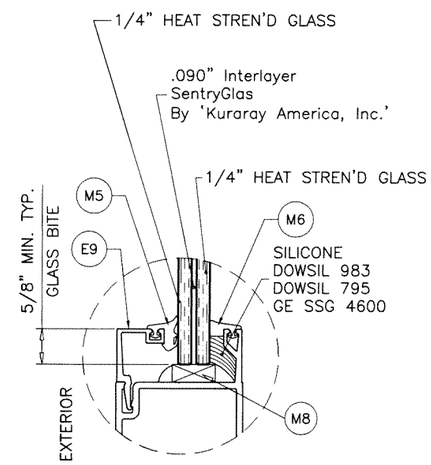

GLASS TYPE 'B'
9/16" OVERALL LAM. GLASS

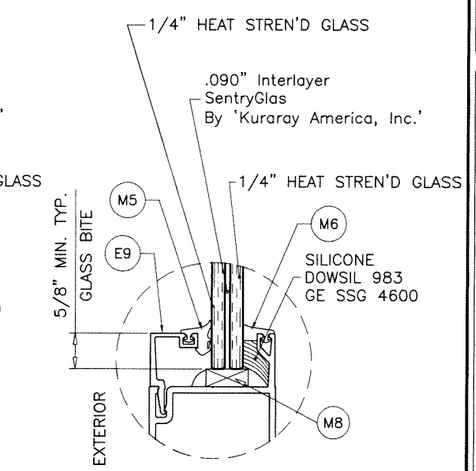

GLASS TYPE 'B.1'
9/16" OVERALL LAM. GLASS

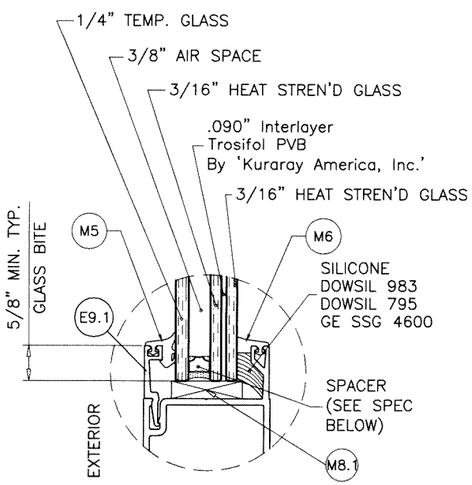

GLASS TYPE 'C'
1-1/8" OVERALL INSUL. LAM. GLASS

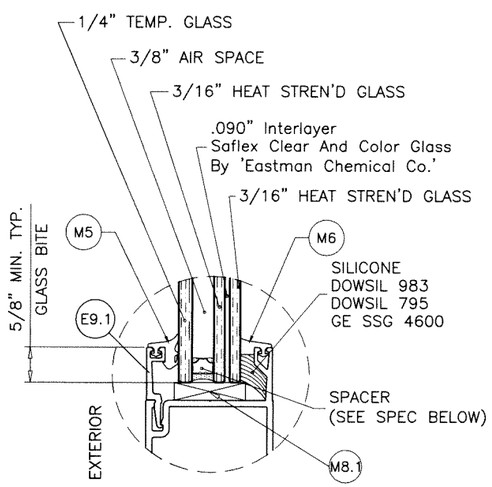

GLASS TYPE 'C.1'
1-1/8" OVERALL INSUL. LAM. GLASS

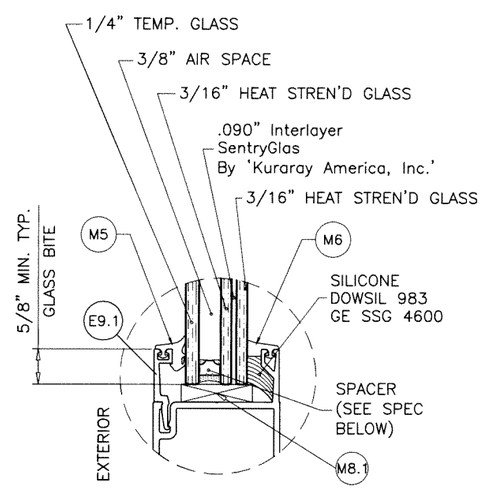

GLASS TYPE 'D'
1-1/8" OVERALL INSUL. LAM. GLASS

GLAZING OPTIONS
S-9000 DOORS

3/8" AIR SPACE CONSISTING OF:

SPACER:
'HELIMA' LOW PROFILE ALUMINUM SPACER
BY 'LINGERMANN GMBH'
AROUND THE PERIMETER OF THE GLASS.

PERIMETER SEALANT:
SILICONE
DOWSIL 791
GE 2000

Sealed: 8/30/2023

JALAL FAROOQ
LICENSE
No. 81223
STATE OF FLORIDA
PROFESSIONAL ENGINEER

FL #22527

AL-FAROOQ CORPORATION
ENGINEERS & PRODUCT DEVELOPMENT
9360 SUNSET DRIVE, SUITE 220
MIAMI, FLORIDA 33173 (C.A.N. 3538)
TEL. (305) 264-8100 FAX. (305) 262-6978

COMP-ANL\W17-91ESW

SERIES-9000 ALUM OUTSWING FRENCH DOOR (L.M.I.)

E.S. WINDOWS, LLC
3550 N.W. 49 STREET
MIAMI, FL. 33142
TEL. (305) 638-5151 FAX. (305) 638-5158

revisions:

no	date	by	description

date: 10-19-17
scale: 3/8" = 1"
dr. by: TARIQ
chk. by:

drawing no.
W17-91

sheet 7 of 18

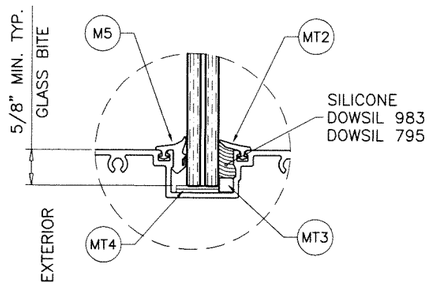

GLAZING DETAIL
S-9500 TRANSOM

GLASS TYPES A. A.1, A.2, B & B.1

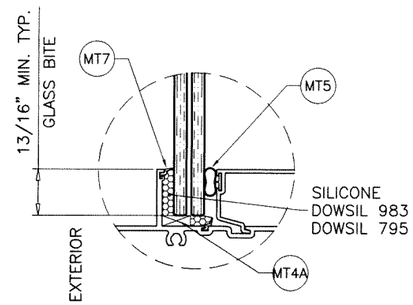

GLAZING DETAIL
S-8000 TRANSOM

GLASS TYPES A. A.1, A.2, B & B.1

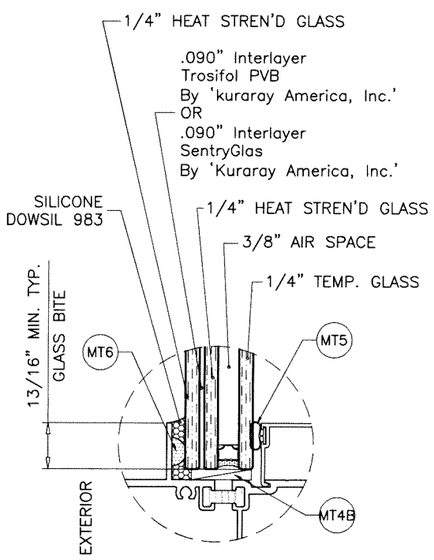

GLASS TYPE 'E'

1-1/4" OVERALL LAM. INSUL. GLASS

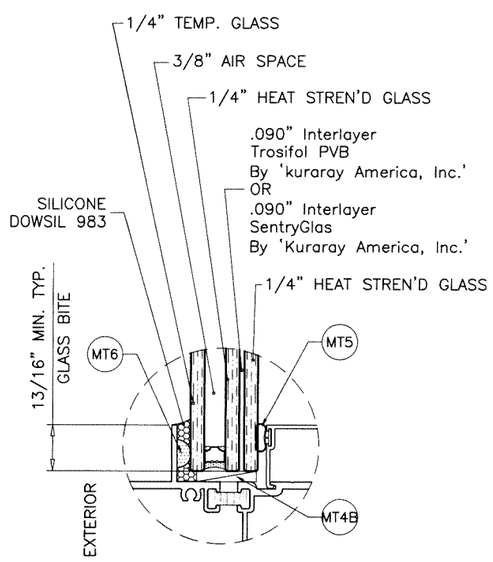

GLASS TYPE 'E-R'

1-1/4" OVERALL INSUL. LAM. GLASS

GLAZING OPTIONS
S-8000T TRANSOM

3/8" AIR SPACE CONSISTING OF:

SPACER:
'HELIMA' LOW PROFILE ALUMINUM SPACER
BY 'LINGERMANN GMBH'
AROUND THE PERIMETER OF THE GLASS.

PERIMETER SEALANT:
SILICONE
DOWSIL 791
GE 2000

Sealed: 8/30/2023

JALAL FAROOQ
LICENSE
No. 81223
STATE OF FLORIDA
PROFESSIONAL ENGINEER

FL #22527

AL-FAROOQ CORPORATION
ENGINEERS & PRODUCT DEVELOPMENT
9360 SUNSET DRIVE, SUITE 220
MIAMI, FLORIDA 33173 (C.A.N. 3538)
TEL. (305) 264-8100 FAX. (305) 262-6978

COMP-ANL\W17-91ESW

SERIES-9000 ALUM OUTSWING FRENCH DOOR (L.M.I.)

E.S. WINDOWS, LLC
3550 N.W. 49 STREET
MIAMI, FL. 33142
TEL. (305) 638-5151 FAX. (305) 638-5158

revisions:

no	date	by	description

date: 10-19-17
scale: 3/8" = 1"
dr. by: TARIQ
chk. by:

drawing no.
W17-91

DOORS SHOWN WITH SERIES ES-9500 FRAMES.
CAN ALSO BE USED WITH ES-8000 & ES-8000T FRAMES.

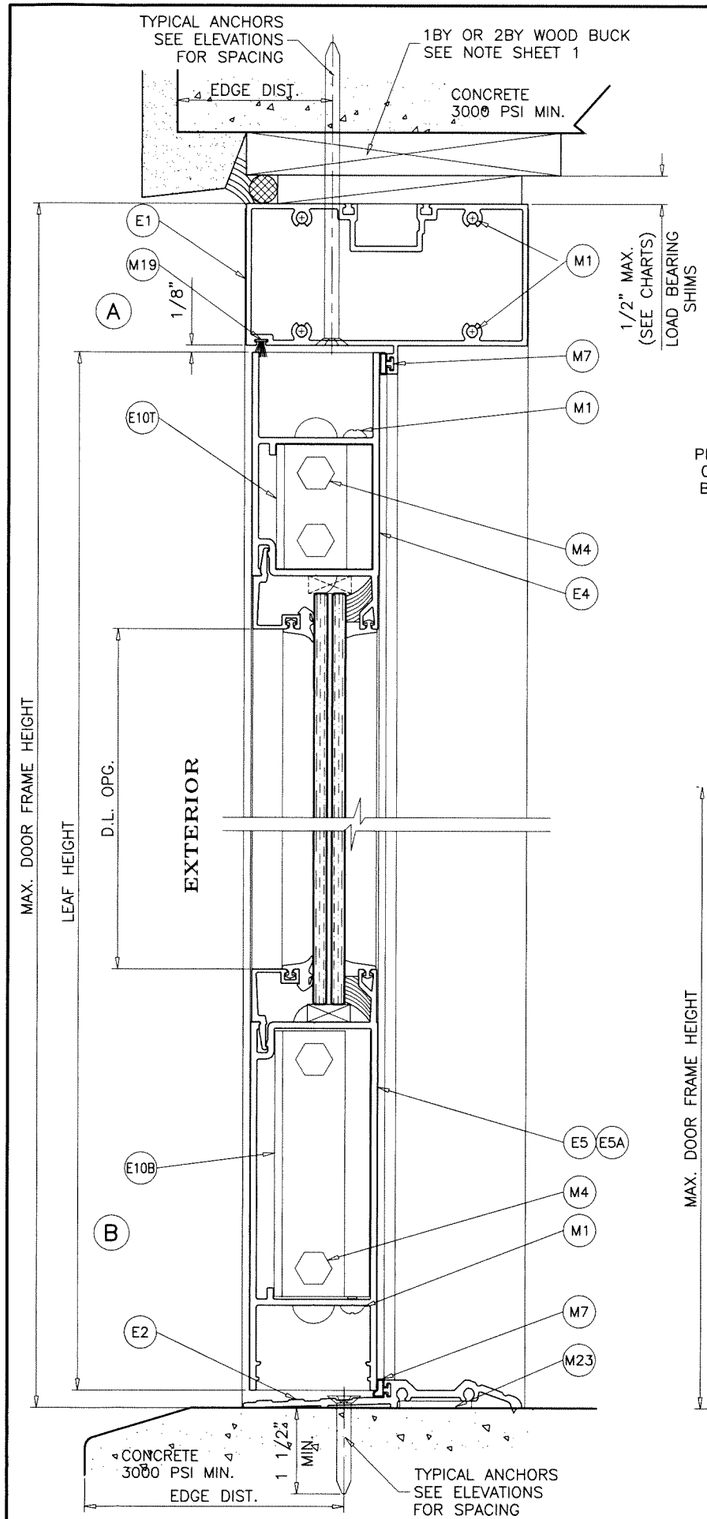

STANDARD THRESHOLD
NOT APPROVED FOR WATER INFILTRATION RESISTANCE
(SEE SHEETS 2, 4, 5 & 6)

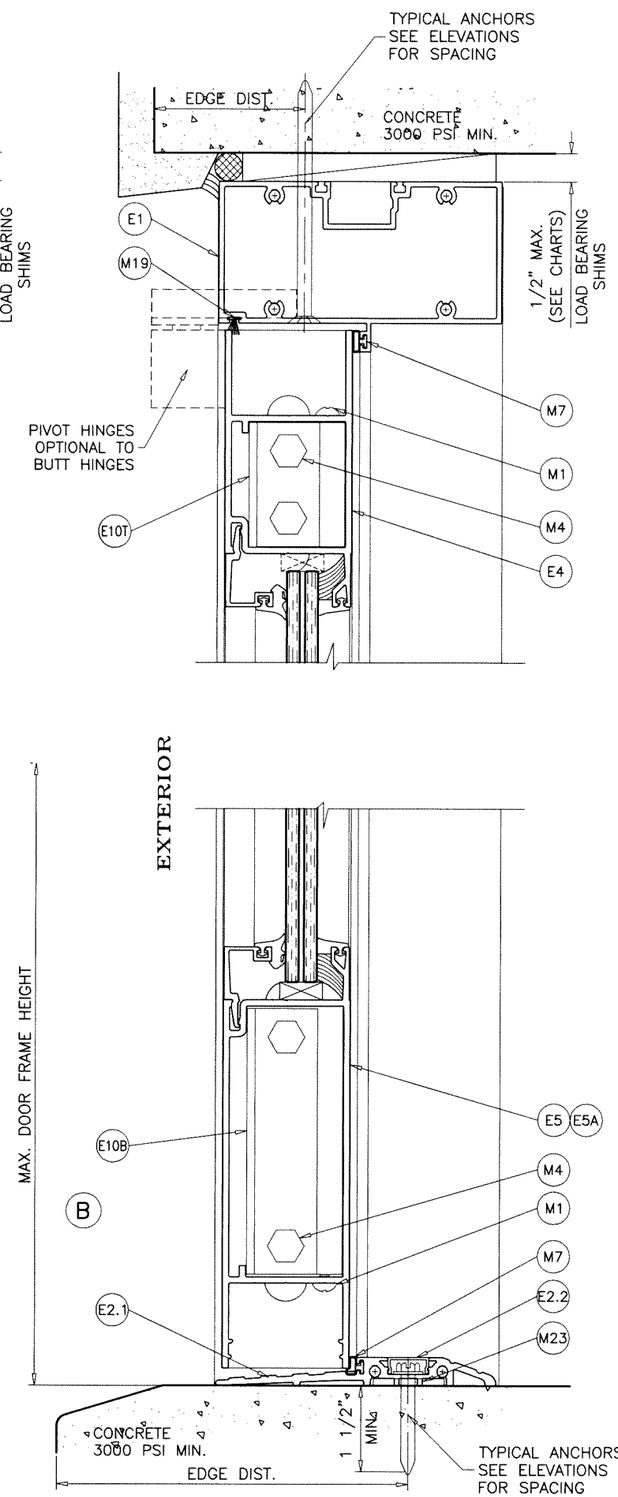

STANDARD THRESHOLD
NOT APPROVED FOR WATER INFILTRATION RESISTANCE
(SEE SHEETS 2, 4, 5 & 6)

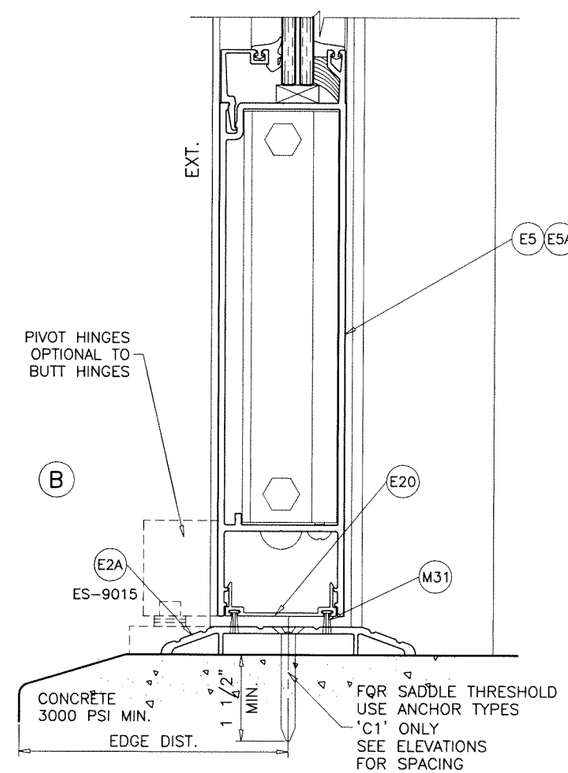

SADDLE THRESHOLD
NOT APPROVED FOR WATER INFILTRATION RESISTANCE
LIMIT MAX. LOADS TO ±80 PSF

Sealed: 8/30/2023

FL #22527

JALAL FAROOQ
LICENSE
No. 81223
STATE OF FLORIDA
PROFESSIONAL ENGINEER

AL-FAROOQ CORPORATION
ENGINEERS & PRODUCT DEVELOPMENT
9360 SUNSET DRIVE, SUITE 220
MIAMI, FLORIDA 33173 (C.A.N. 3538)
TEL. (305) 264-8100 FAX. (305) 262-6978
COMP-ANL\W17-91ESW

SERIES-9000 ALUM OUTSWING FRENCH DOOR (L.M.I.)

E.S. WINDOWS, LLC
3550 N.W. 49 STREET
MIAMI, FL. 33142
TEL. (305) 638-5151 FAX. (305) 638-5158

revisions:

no	date	by	description

date: 10-19-17
scale: 3/8" = 1"
dr. by: TARIQ
chk. by:

drawing no.
W17-91

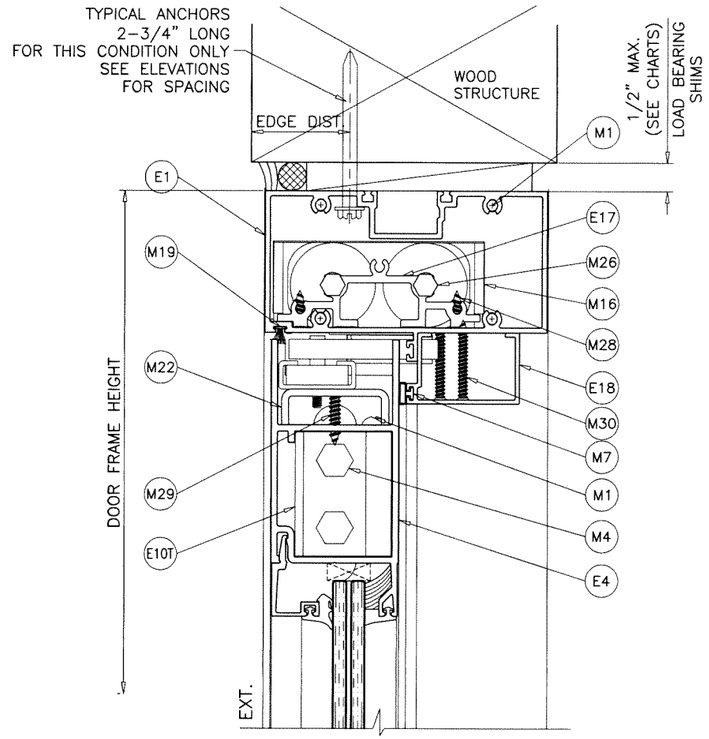

DOOR CLOSERS OPTIONAL

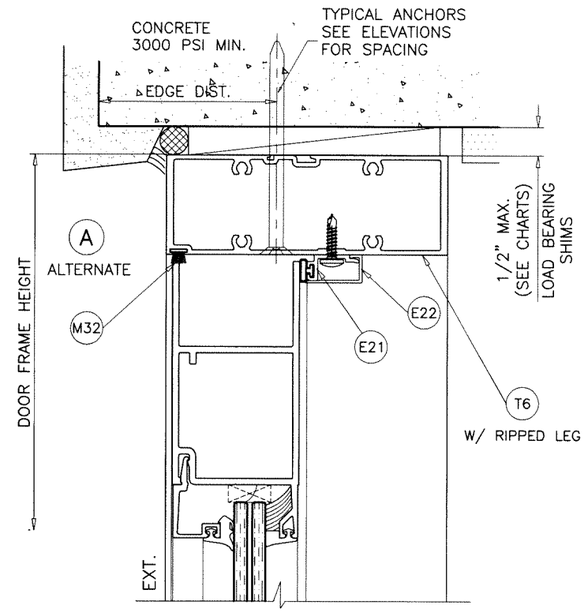

DOOR HEAD
SERIES-8000 FRAME OPTION

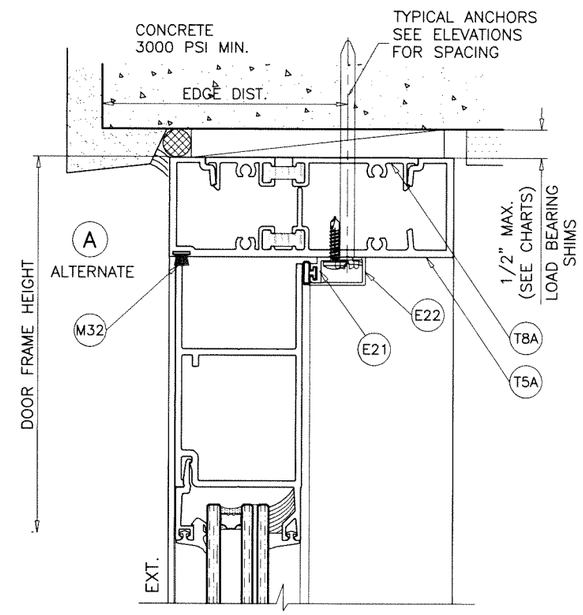

DOOR HEAD
SERIES-8000T FRAME OPTION

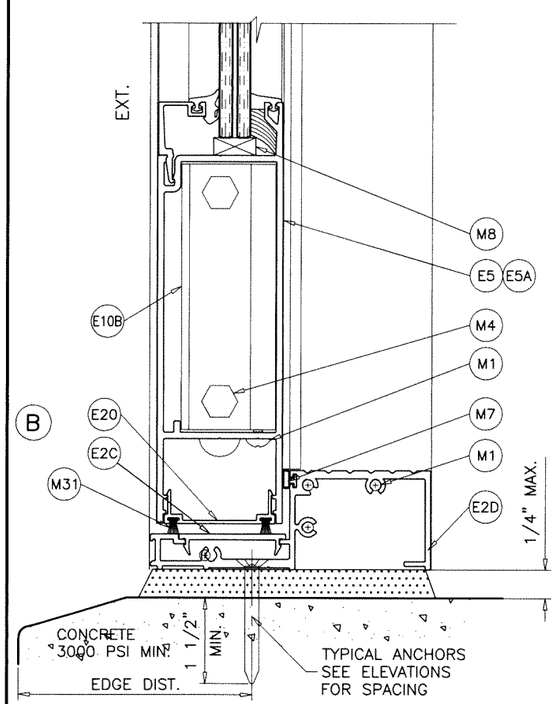

MEDIUM THRESHOLD
NOT APPROVED FOR WATER INFILTRATION RESISTANCE

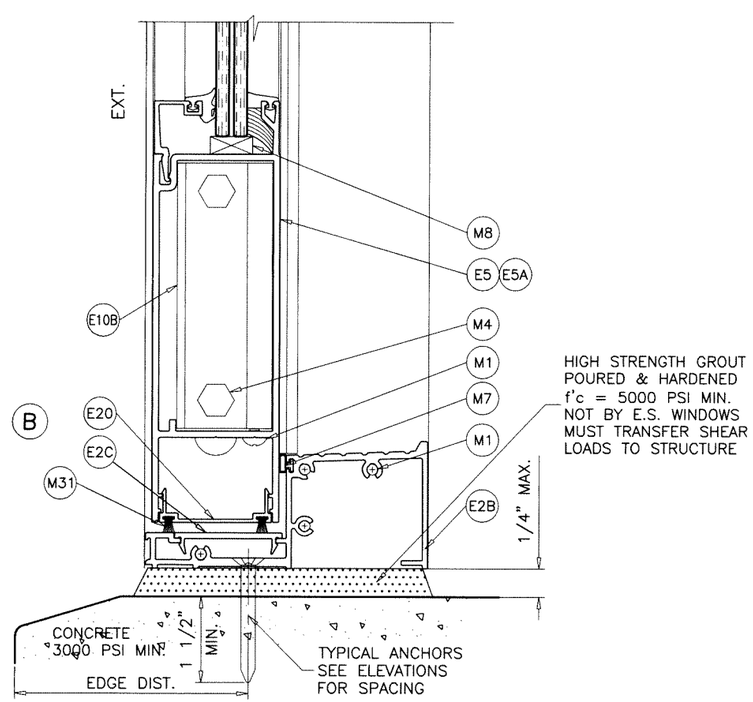

HIGH THRESHOLD
APPROVED FOR WATER INFILTRATION RESISTANCE

DOORS SHOWN WITH SERIES ES-9500 FRAMES.
CAN ALSO BE USED WITH ES-8000 & ES-8000T FRAMES.

Sealed: 8/30/2023

FL #22527

JALAL FAROOQ
LICENSE
No. 81223
STATE OF FLORIDA
PROFESSIONAL ENGINEER

AL-FAROOQ CORPORATION
ENGINEERS & PRODUCT DEVELOPMENT
9360 SUNSET DRIVE, SUITE 220
MIAMI, FLORIDA 33173 (C.A.N. 3538)
TEL. (305) 264-8100 FAX. (305) 262-6978

COMP-ANL\W17-91ESW

SERIES-9000 ALUM OUTSWING FRENCH DOOR (L.M.I.)

E.S. WINDOWS, LLC
3550 N.W. 49 STREET
MIAMI, FL. 33142
TEL. (305) 638-5151 FAX. (305) 638-5158

revisions:

no	date	by	description

date: 10-19-17
scale: 3/8" = 1"
dr. by: TARIQ
chk. by:

drawing no.
W17-91

1X OR 2X WOOD BUCKS AND METAL STRUCTURES NOT BY 'E.S. WDW.' MUST SUPPORT LOADS IMPOSED BY GLAZING SYSTEM AND TRANSFER THEM TO THE BUILDING STRUCTURE.

TYPICAL ANCHORS: SEE ELEV. FOR SPACING

AT HEAD OR JAMBS

TYPE 'A'– 1/4" DIA. ULTRACON+ BY 'DEWALT' (Fu=164 KSI, Fy=148 KSI)

THRU 1BY OR 2BY WOOD BUCKS INTO CONCRETE OR BLOCKS
1–1/4" MIN. EMBED INTO CONCRETE (HEAD/JAMBS)
1–1/4" MIN. EMBED INTO GROUT FILLED BLOCKS (JAMBS)

DIRECTLY INTO CONCRETE OR BLOCKS
2" MIN. EMBED INTO CONCRETE (HEAD/JAMBS)
2" MIN. EMBED INTO GROUT FILLED BLOCKS (JAMBS)

ANCHOR EDGE DISTANCES

INTO CONCRETE AND BLOCKS = 2–1/2" MIN.
INTO WOOD STRUCTURE = 1" MIN.

AT HEAD OR JAMBS

TYPE 'C'– 5/16" ULTRACON BY 'DEWALT' (Fu=177 KSI, Fy=155 KSI)

THRU 1BY OR 2BY WOOD BUCKS INTO CONCRETE OR BLOCKS
1–1/4" MIN. EMBED INTO CONCRETE (HEAD/JAMBS)
1–1/4" MIN. EMBED INTO GROUT FILLED BLOCKS (JAMBS)

DIRECTLY INTO CONCRETE OR BLOCKS
2" MIN. EMBED INTO CONCRETE (HEAD/JAMBS)
2" MIN. EMBED INTO GROUT FILLED BLOCKS (JAMBS)

ANCHOR EDGE DISTANCES

INTO CONCRETE AND BLOCKS = 3–1/8" MIN.
INTO WOOD STRUCTURE = 1–1/4" MIN.

AT HEAD OR JAMBS

TYPE 'D'– 1/4" TEKS OR SELF DRILLING SCREWS (GRADE 5 CRS)

INTO F.B.C. APPROVED MULLIONS
OR
INTO METAL STRUCTURES (HEAD/JAMBS)
(3) THREADS MIN. PENETRATION BEYOND SUBSTRATE
ALUMINUM: 1/8" THK. MIN. (6063–T5 MIN.)
STEEL: 1/8" THK. MIN. (Fy = 36 KSI MIN.)
(STEEL IN CONTACT WITH ALUMINUM TO BE PLATED OR PAINTED)

ANCHOR EDGE DISTANCES

INTO METAL STRUCTURE = 1/2" MIN.

AT SILL

TYPE 'A1'– 1/4" X 1–3/4" ULTRACON+ BY 'DEWALT' (Fu=164 KSI, Fy=148 KSI)

DIRECTLY INTO CONCRETE (FOR STD. AND HIGH THRESHOLD)
WITH 1–1/2" MIN. EMBED INTO CONCRETE

ANCHOR EDGE DISTANCES

INTO CONCRETE = 2–1/2" MIN.

AT SILL

TYPE 'C1'– 5/16" X 2" ULTRACON BY 'DEWALT' (Fu=177 KSI, Fy=155 KSI)

DIRECTLY INTO CONCRETE (FOR SADDLE THRESHOLD)
WITH 1–1/2" MIN. EMBED INTO CONCRETE

ANCHOR EDGE DISTANCES

INTO CONCRETE = 3–1/8" MIN.

WOOD AT HEAD OR JAMBS SG = 0.55 MIN.
CONCRETE AT HEAD, SILL OR JAMBS f'c = 3000 PSI MIN.
C–90 GROUT FILLED BLOCK AT JAMBS f'm = 2000 PSI MIN.

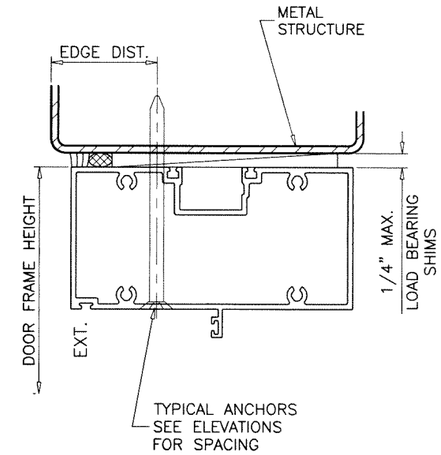

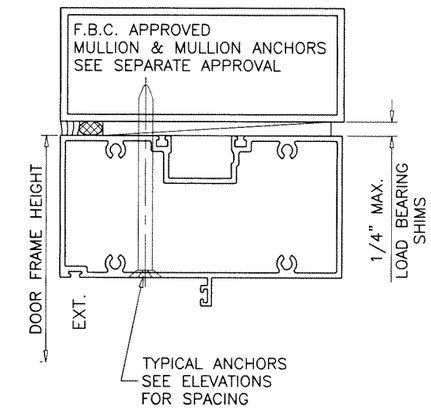

Sealed: 8/30/2023

JALAL FAROOQ
LICENSE
No. 81223
STATE OF FLORIDA
PROFESSIONAL ENGINEER

FL #22527

AL-FAROOQ CORPORATION
ENGINEERS & PRODUCT DEVELOPMENT
9360 SUNSET DRIVE, SUITE 220
MIAMI, FLORIDA 33173 (C.A.N. 3538)
TEL. (305) 264-8100 FAX. (305) 262-6978
COMP–ANL\W17–91ESW

SERIES–9000 ALUM OUTSWING FRENCH DOOR (L.M.I.)

E.S. WINDOWS, LLC
3550 N.W. 49 STREET
MIAMI, FL. 33142
TEL. (305) 638–5151 FAX. (305) 638–5158

revisions:

no	date	by	description

date: 10–19–17
scale: 1/2"=1'–0"
dr. by: TARIQ
chk. by:

drawing no. W17–91

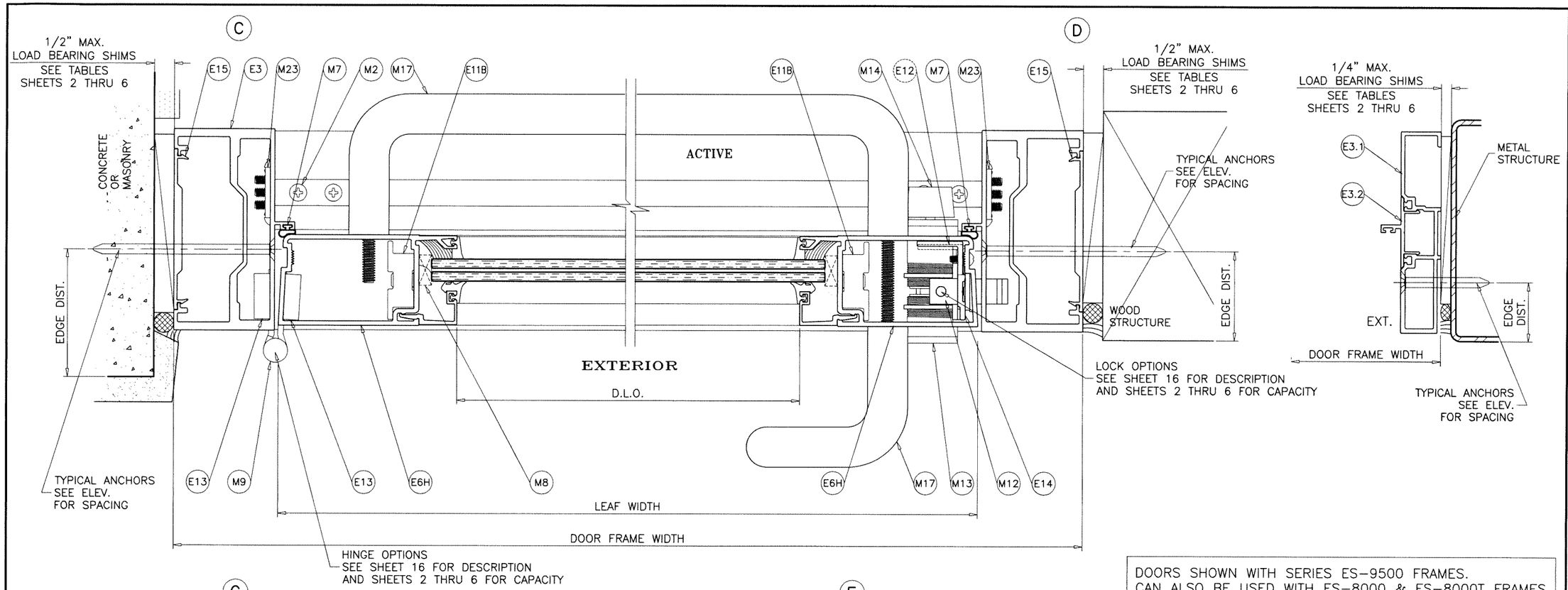

DOORS SHOWN WITH SERIES ES-9500 FRAMES.
CAN ALSO BE USED WITH ES-8000 & ES-8000T FRAMES.

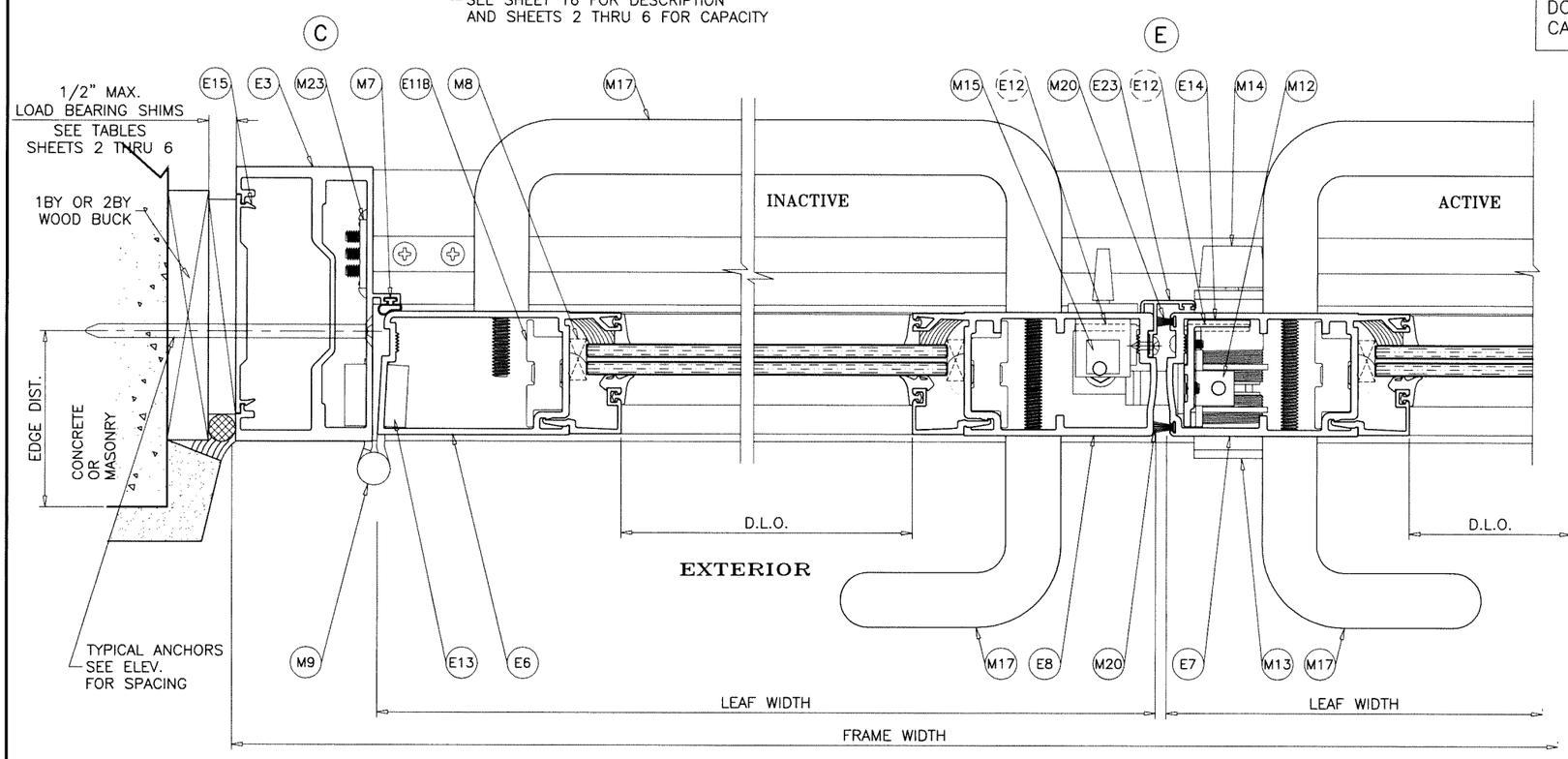

Sealed: 8/30/2023

FL #22527

JALAL FAROOQ
LICENSE
No. 81223
STATE OF FLORIDA
PROFESSIONAL ENGINEER

AL-FAROOQ CORPORATION
ENGINEERS & PRODUCT DEVELOPMENT
9360 SUNSET DRIVE, SUITE 220
MIAMI, FLORIDA 33173 (C.A.N. 3538)
TEL. (305) 264-8100 FAX. (305) 262-6978

COMP-ANL\W17-91ESW

SERIES-9000 ALUM OUTSWING FRENCH DOOR (L.M.I.)

E.S. WINDOWS, LLC
3550 N.W. 49 STREET
MIAMI, FL. 33142
TEL. (305) 638-5151 FAX. (305) 638-5158

revisions:

no	date	by	description

date: 10-19-17
scale: 3/8" = 1"
dr. by: TARIQ
chk. by:

drawing no.
W17-91

C ALTERNATE

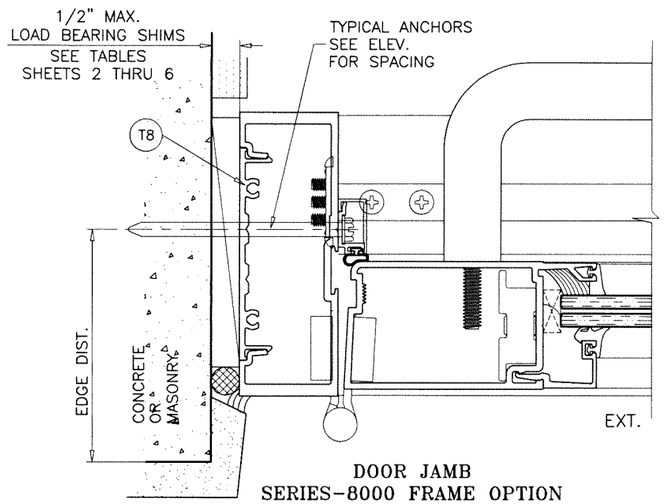

DOOR JAMB
SERIES-8000 FRAME OPTION

D ALTERNATE

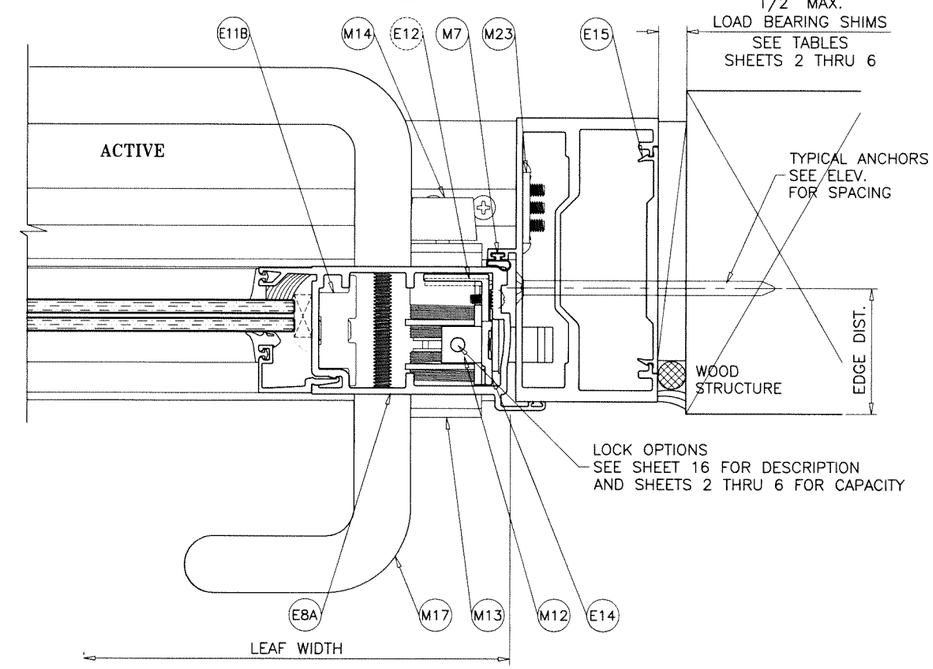

C ALTERNATE

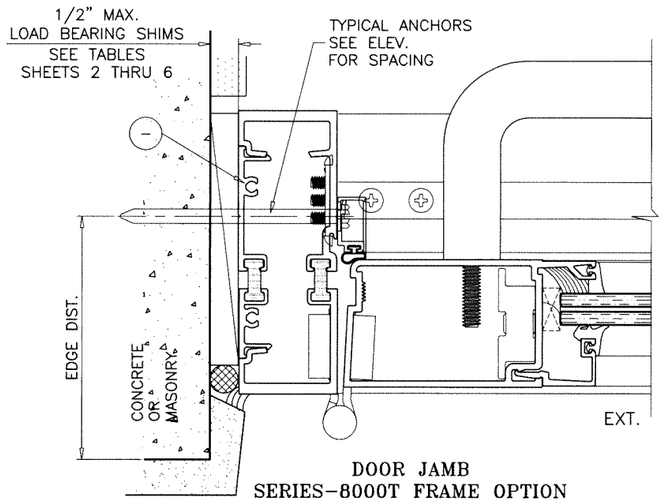

DOOR JAMB
SERIES-8000T FRAME OPTION

E ALTERNATE

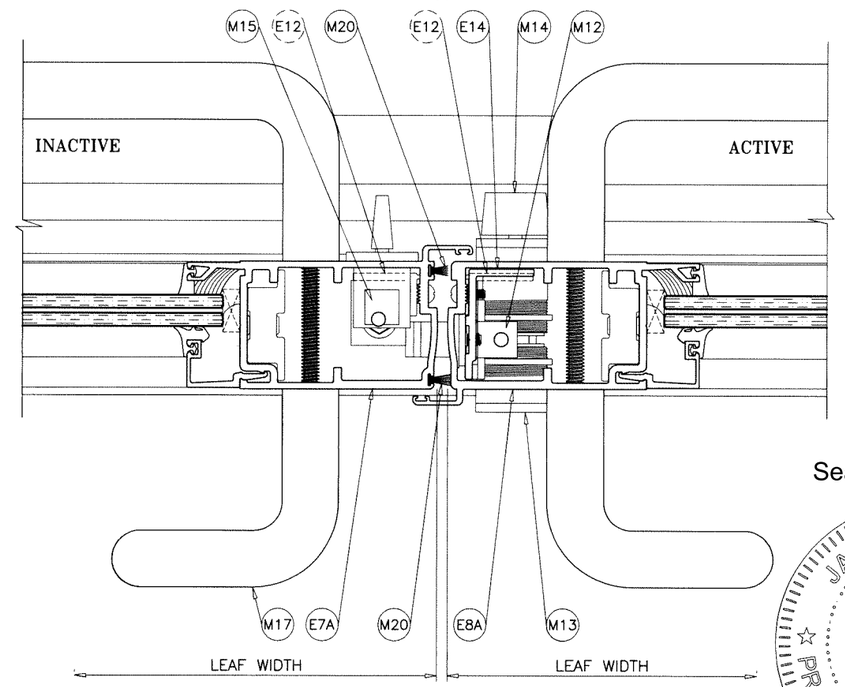

ALT. MEETING STILES NOT APPROVED FOR DOORS
WITH PANIC EXIT DEVICES.

Sealed: 8/30/2023

JALAL FAROOQ
LICENSE
No. 81223
STATE OF FLORIDA
PROFESSIONAL ENGINEER

FL #22527

AL-FAROOQ CORPORATION
ENGINEERS & PRODUCT DEVELOPMENT
9360 SUNSET DRIVE, SUITE 220
MIAMI, FLORIDA 33173 (C.A.N. 3538)
TEL. (305) 264-8100 FAX. (305) 262-6978

COMP-ANL\W17-91ESW

SERIES-9000 ALUM OUTSWING FRENCH DOOR (L.M.I.)

E.S. WINDOWS, LLC
3550 N.W. 49 STREET
MIAMI, FL. 33142
TEL. (305) 638-5151 FAX. (305) 638-5158

revisions:

no	date	by	description

date: 10-19-17
scale: 3/8" = 1"
dr. by: TARIQ
chk. by:

drawing no.
W17-91

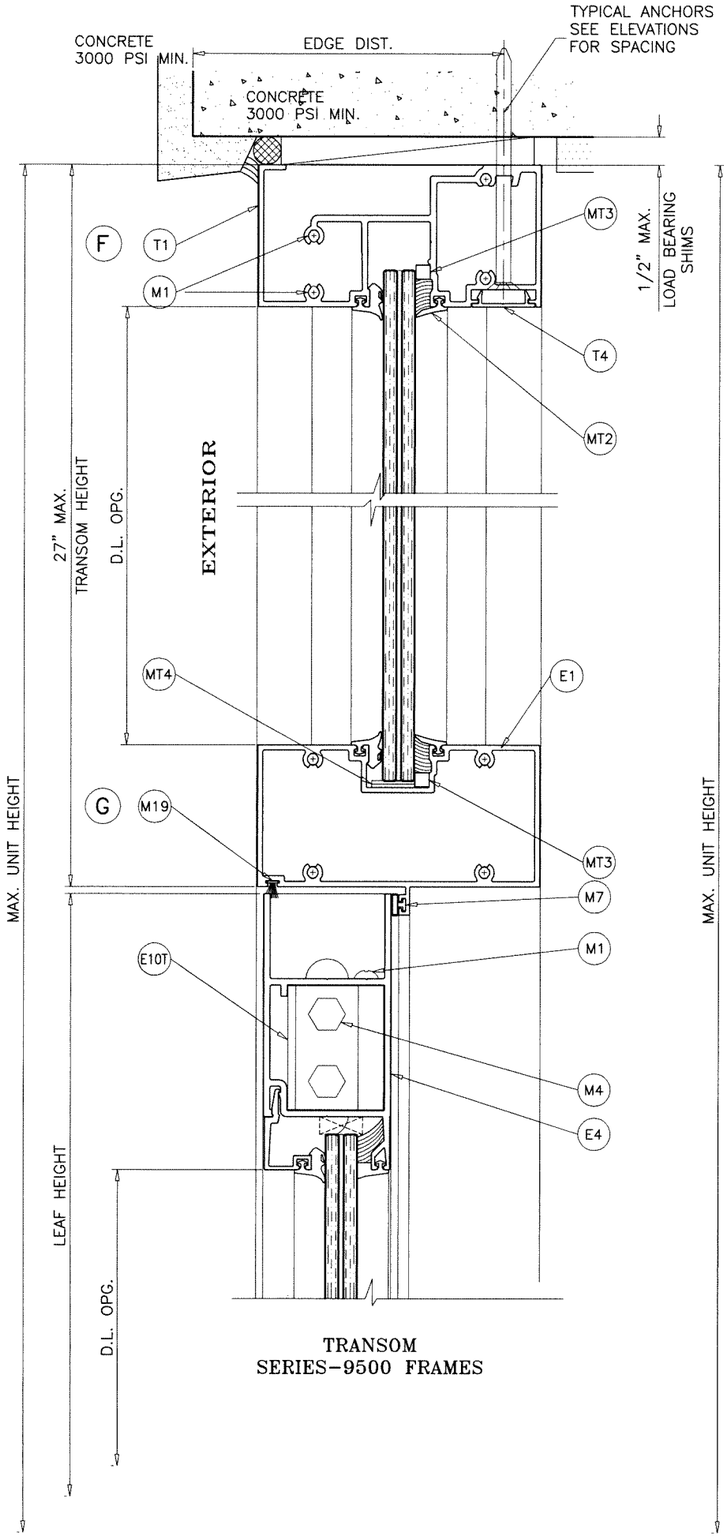

TRANSOM
SERIES-9500 FRAMES

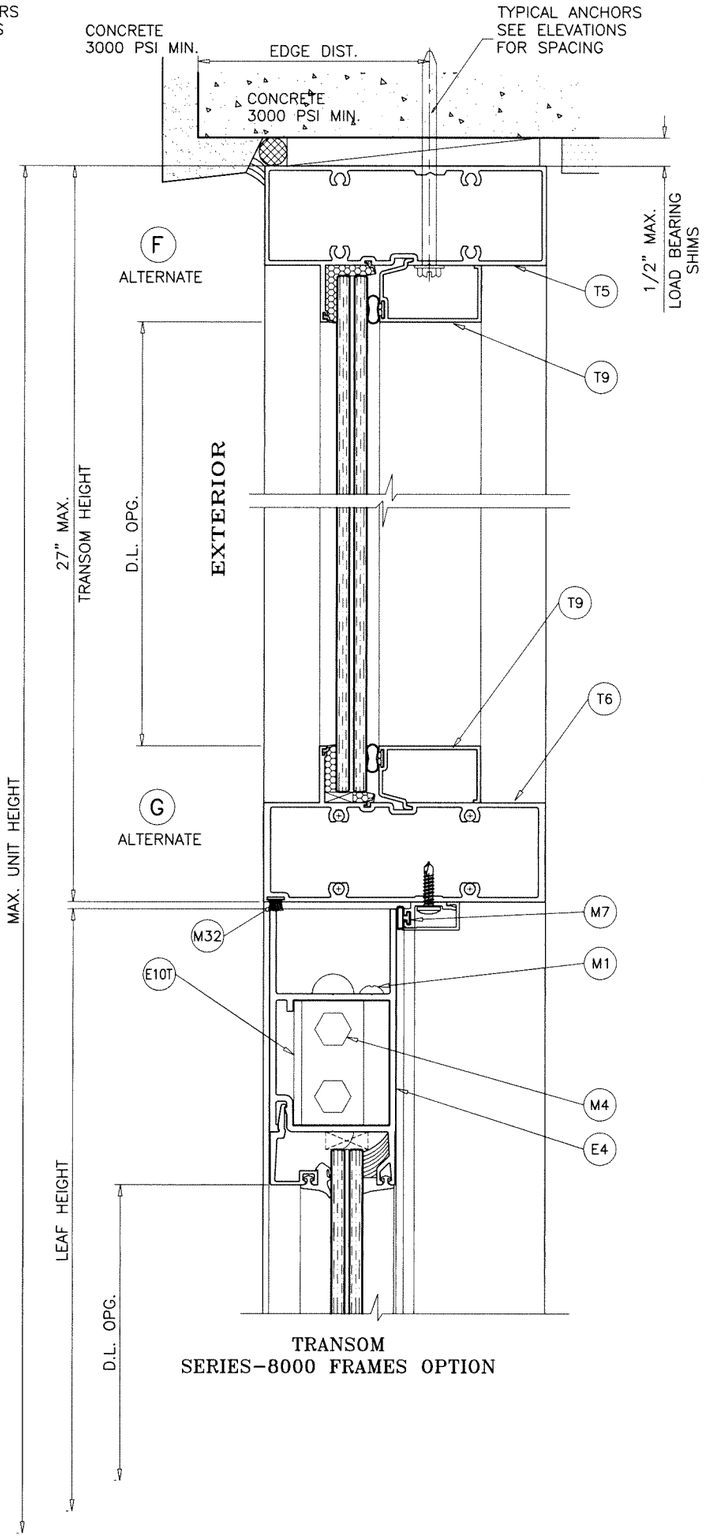

TRANSOM
SERIES-8000 FRAMES OPTION

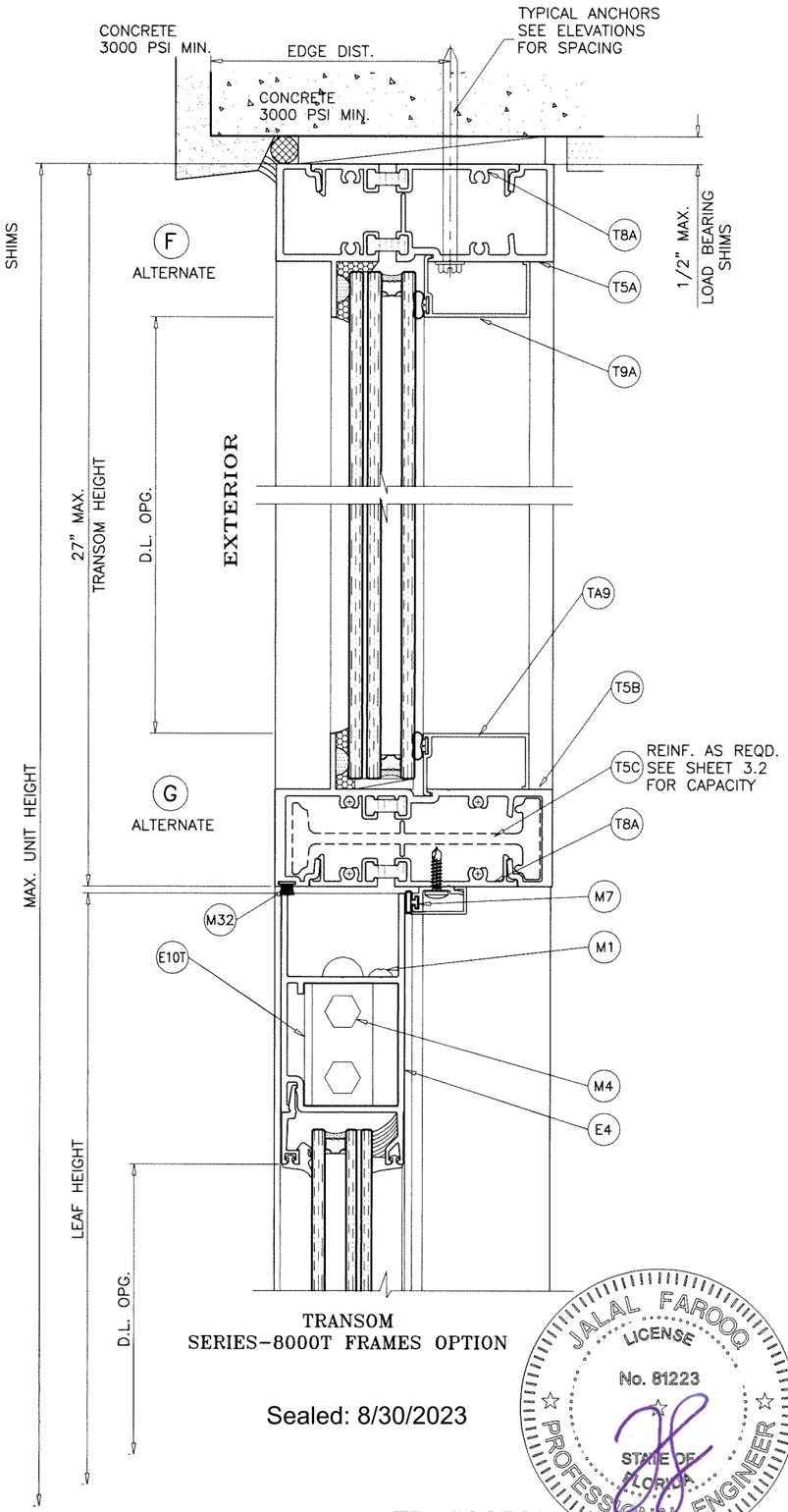

TRANSOM
SERIES-8000T FRAMES OPTION

Sealed: 8/30/2023

JALAL FAROOQ
LICENSE
No. 81223
STATE OF FLORIDA
PROFESSIONAL ENGINEER

FL #22527

AL-FAROOQ CORPORATION
ENGINEERS & PRODUCT DEVELOPMENT
9360 SUNSET DRIVE, SUITE 220
MIAMI, FLORIDA 33173 (C.A.N. 3538)
TEL. (305) 264-8100 FAX. (305) 262-6978

COMP-ANL\W17-91ESW

SERIES-9000 ALUM OUTSWING FRENCH DOOR (L.M.I.)

E.S. WINDOWS, LLC
3550 N.W. 49 STREET
MIAMI, FL. 33142
TEL. (305) 638-5151 FAX. (305) 638-5158

revisions:

no	date	by	description

date: 10-19-17
scale: 3/8" = 1"
dr. by: TARIQ
chk. by:

drawing no.
W17-91

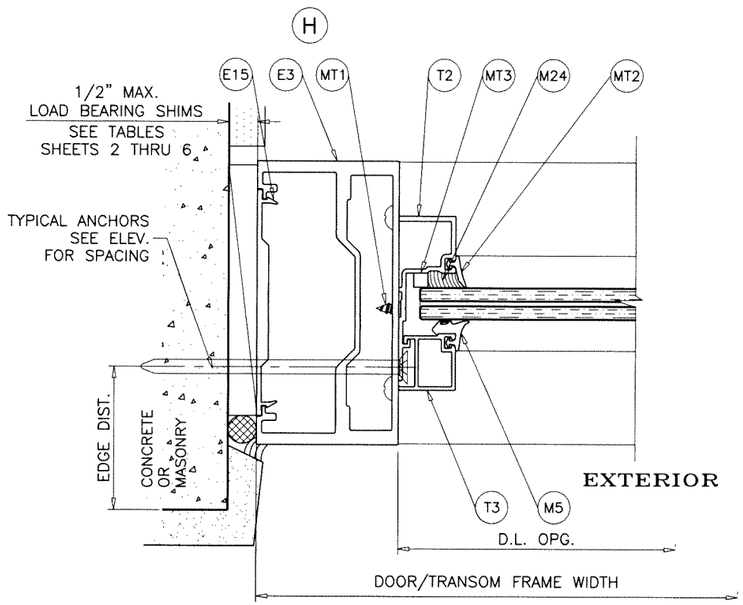

TRANSOM
SERIES-9500 FRAMES

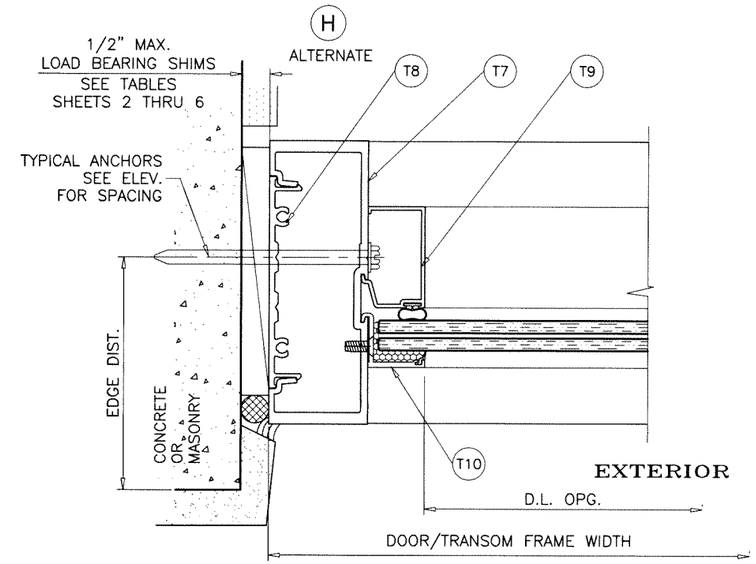

TRANSOM JAMB
SERIES-8000 FRAMES OPTION

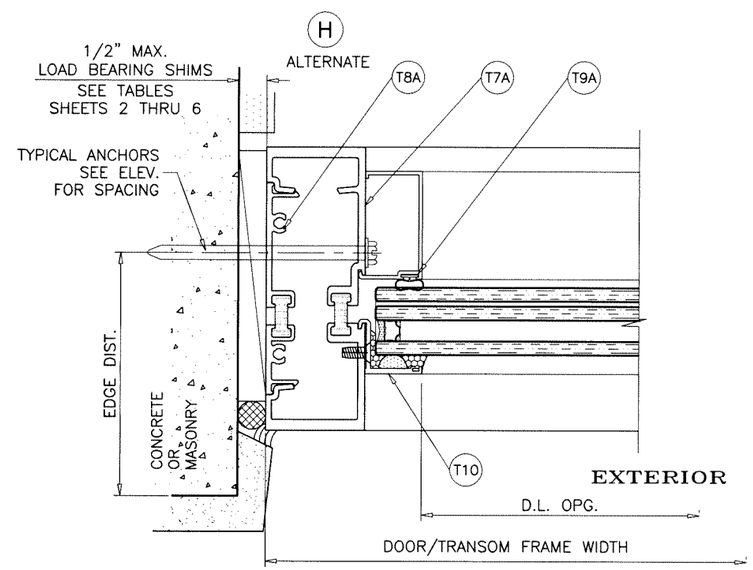

TRANSOM JAMB
SERIES-8000T FRAMES OPTION

Sealed: 8/30/2023

JALAL FAROOQ
LICENSE
No. 81223
STATE OF FLORIDA
PROFESSIONAL ENGINEER

FL #22527

AL-FAROOQ CORPORATION
ENGINEERS & PRODUCT DEVELOPMENT
9360 SUNSET DRIVE, SUITE 220
MIAMI, FLORIDA 33173 (C.A.N. 3538)
TEL. (305) 264-8100 FAX. (305) 262-6978

COMP-ANL\W17-91ESW

SERIES-9000 ALUM OUTSWING FRENCH DOOR (L.M.I.)

E.S. WINDOWS, LLC
3550 N.W. 49 STREET
MIAMI, FL. 33142
TEL. (305) 638-5151 FAX. (305) 638-5158

revisions:

no	date	by	description

date: 10-19-17
scale: 3/8" = 1"
dr. by: TARIQ
chk. by:

drawing no.
W17-91

E.S. WINDOWS 8000, 8000T OR 9500
WINDOW WALL SYSTEM
SEE SEPARATE APPROVAL FOR DOOR MULLION,
MULLION ANCHORS AND TRIBUTARY LOAD REQUIREMENTS
LOWER VALUES FROM DOOR CAPACITY CHARTS OR
WINDOW WALL APPROVAL WILL APPLY TO ENTIRE SYSTEM
(TO BE REVIEWED BY AHJ)

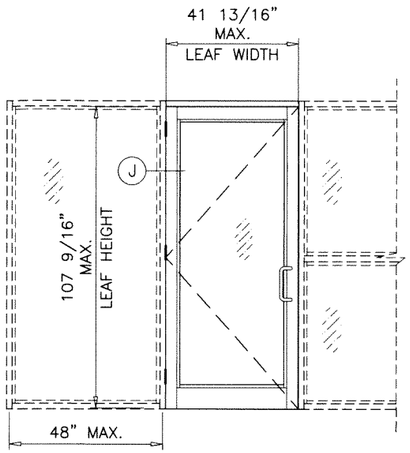

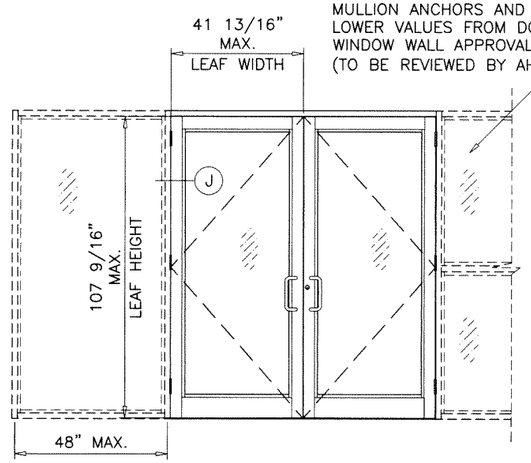

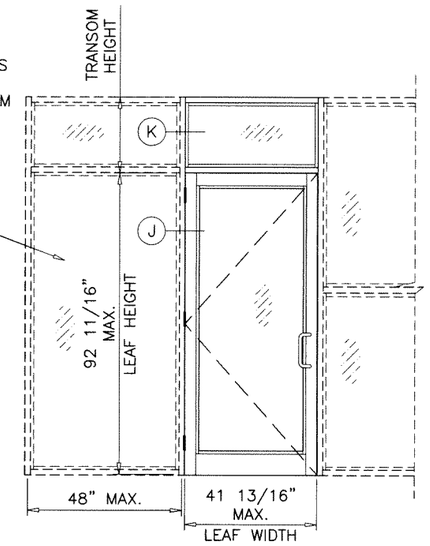

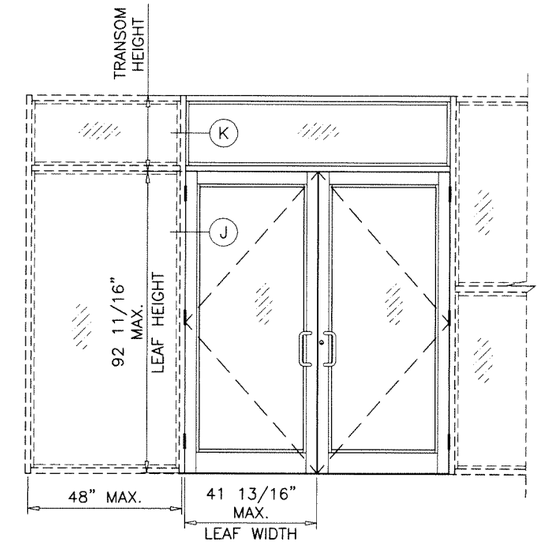

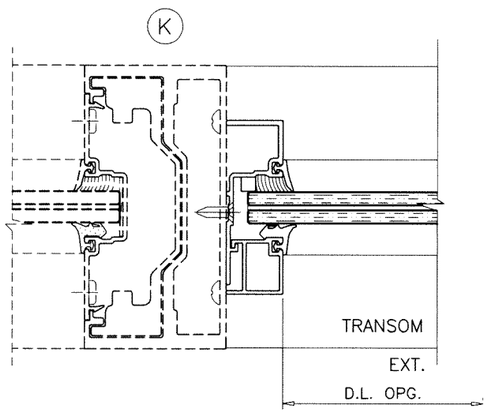

F.B.C. APPROVED
SERIES 9500 WINDOW WALL SYSTEM BY 'E.S. WINDOWS'
UNDER SEPARATE APPROVAL.

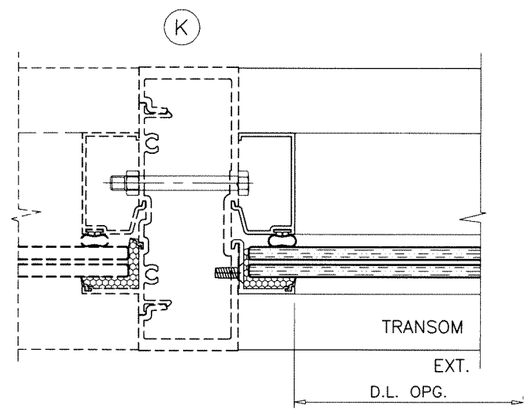

F.B.C. APPROVED
SERIES 8000 WINDOW WALL SYSTEM BY 'E.S. WINDOWS'
UNDER SEPARATE APPROVAL.

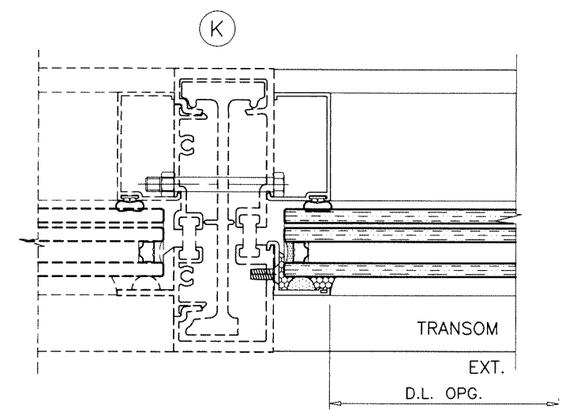

F.B.C. APPROVED
SERIES 8000T WINDOW WALL SYSTEM BY 'E.S. WINDOWS'
UNDER SEPARATE APPROVAL.

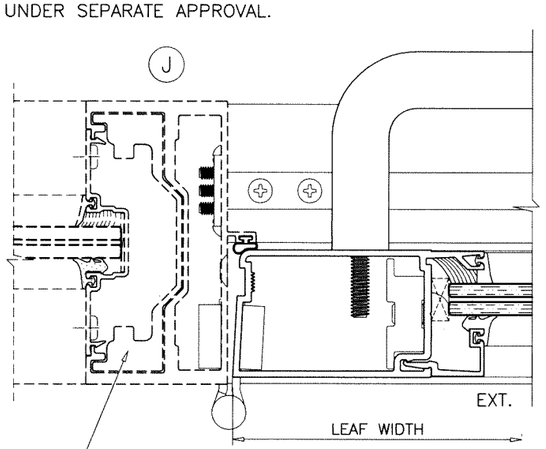

REINFORCING WILL VARY
SEE CURRENT APPROVAL OF
E.S. SERIES 9500
WINDOW WALL SYSTEM
FOR DETAILS

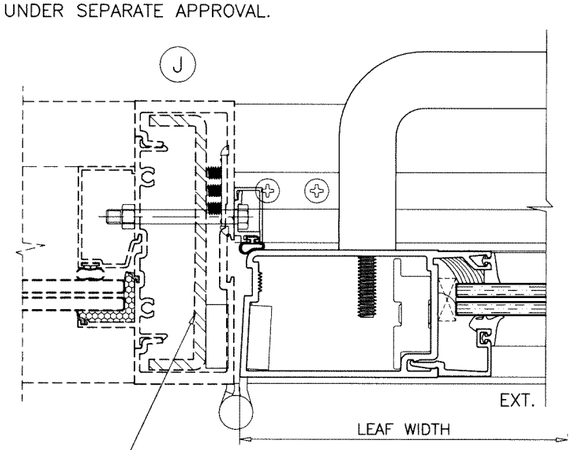

REINFORCING WILL VARY
SEE CURRENT APPROVAL OF
E.S. SERIES 8000
WINDOW WALL SYSTEM
FOR DETAILS

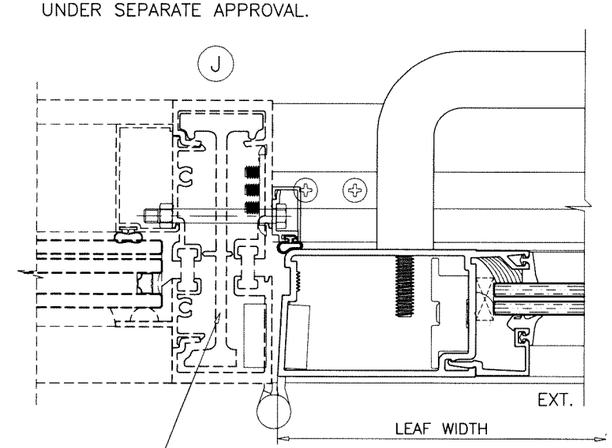

REINFORCING WILL VARY
SEE CURRENT APPROVAL OF
E.S. SERIES 8000T
WINDOW WALL SYSTEM
FOR DETAILS

Sealed: 8/30/2023

JALAL FAROOQ
LICENSE
No. 81223
STATE OF FLORIDA
PROFESSIONAL ENGINEER

FL #22527

AL-FAROOQ CORPORATION
ENGINEERS & PRODUCT DEVELOPMENT
9360 SUNSET DRIVE, SUITE 220
MIAMI, FLORIDA 33173 (C.A.N. 3538)
TEL. (305) 264-8100 FAX. (305) 262-6978

COMP-ANL\W17-91ESW

SERIES-9000 ALUM OUTSWING FRENCH DOOR (L.M.I.)

E.S. WINDOWS, LLC
3550 N.W. 49 STREET
MIAMI, FL. 33142
TEL. (305) 638-5151 FAX. (305) 638-5158

revisions:

no	date	by	description

date: 10-19-17
scale: 1/2"=1'-0"
dr. by: TARIQ
chk. by:

drawing no.
W17-91

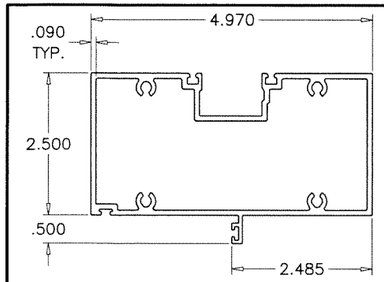

E1 DOOR HEADER Series 9000

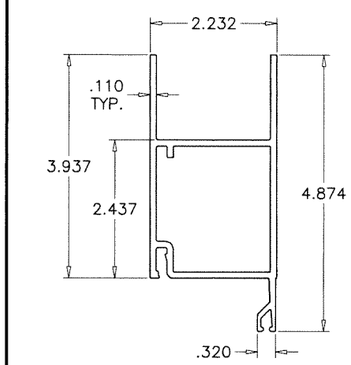

E4 TOP RAIL

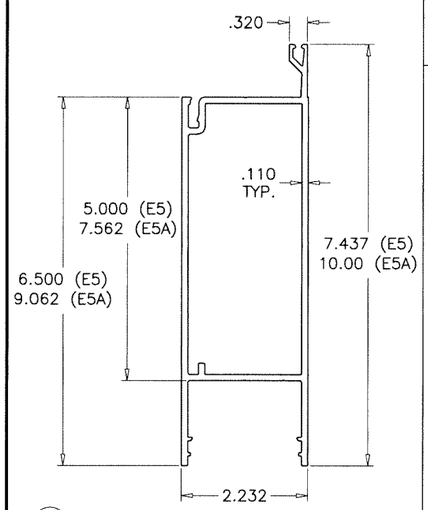

E5 STD. BOTTOM RAIL
E5A HI-PROFILE BOTTOM RAIL

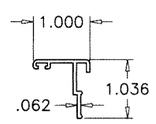

E23 ASTRAGAL STILE

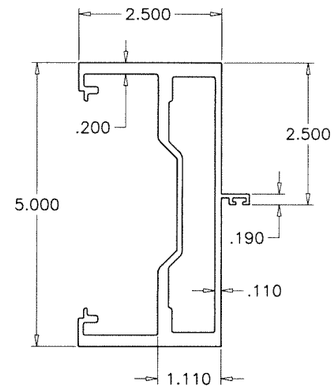

E3 DOOR JAMB Series 9000

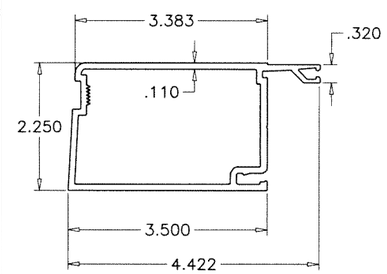

E6 HINGE/LOCK STILE

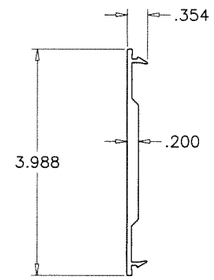

E15 JAMB FILLER

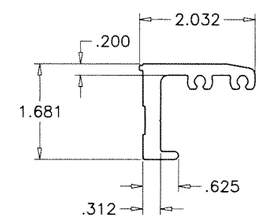

E10 CORNER BLOCK

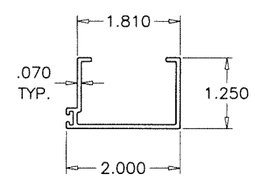

E18 CLOSURE DOOR STOP

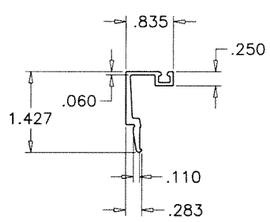

E9 GLASS STOP
(LAM. GLASS)

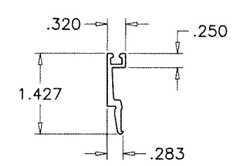

E9.1 GLASS STOP
(INSUL. LAM. GLASS)

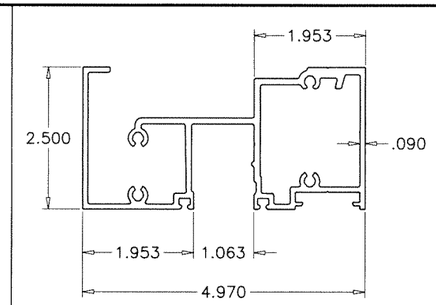

T1 TRANSOM HEADER Series 9500

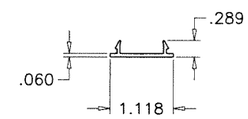

T4 HEAD COVER

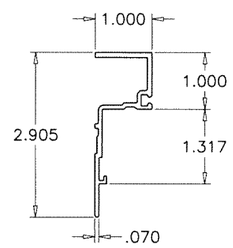

T2 TRANSOM ADAPTER

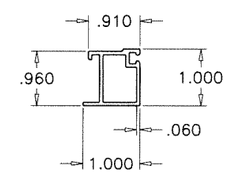

T3 TRANSOM GLASS STOP

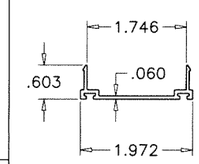

E20 DOOR SWEEP

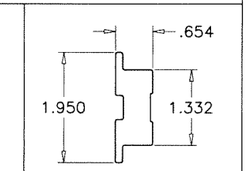

E11 CORNER PLATE

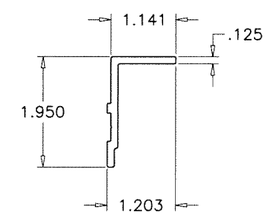

E14 LOCK BACK UP PLATE

Sealed: 8/30/2023

FL #22527

JALAL FAROOQ
LICENSE
No. 81223
STATE OF FLORIDA
PROFESSIONAL ENGINEER

AL-FAROOQ CORPORATION
ENGINEERS & PRODUCT DEVELOPMENT
9360 SUNSET DRIVE, SUITE 220
MIAMI, FLORIDA 33173 (C.A.N. 3538)
TEL. (305) 264-8100 FAX. (305) 262-6978

COMP-ANL\W17-91ESW

SERIES-9000 ALUM OUTSWING FRENCH DOOR (L.M.I.)

E.S. WINDOWS, LLC
3550 N.W. 49 STREET
MIAMI, FL. 33142
TEL. (305) 638-5151 FAX. (305) 638-5158

revisions:

no	date	by	description

date: 10-19-17
scale: 3/8" = 1"
dr. by: TARIQ
chk. by:

drawing no.
W17-91

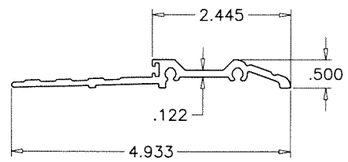

E2 STD. THRESHOLD
ES9014

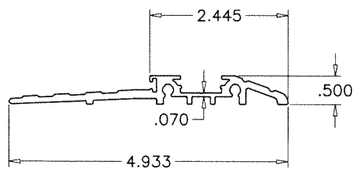

E2.1 ALT. STANDARD THRESHOLD

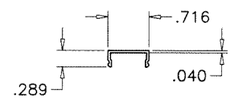

E2.2 SCREW COVER

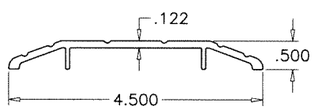

E2A SADDLE THRESHOLD
ES9015

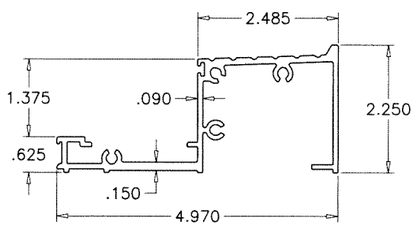

E2B HIGH THRESHOLD
APPR'D FOR WATER RESISTANCE

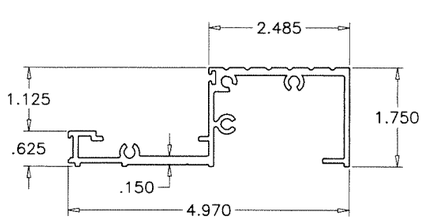

E2D MEDIUM THRESHOLD
NOT APPR'D FOR WATER RESISTANCE

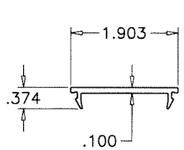

E2C THRESHOLD COVER
ES9027

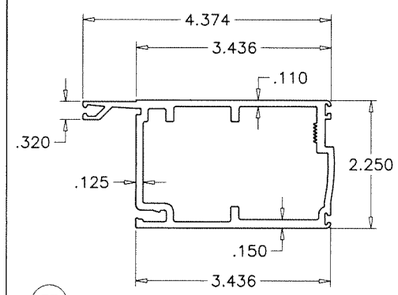

E7 MEETING STILE – INACTIVE LEAF

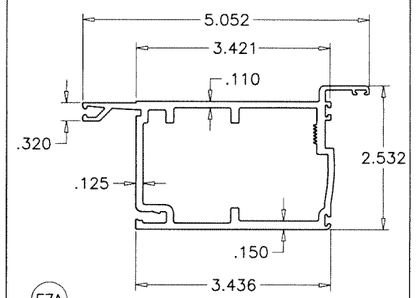

E7A ALT. MEETING STILE – INACTIVE LEAF

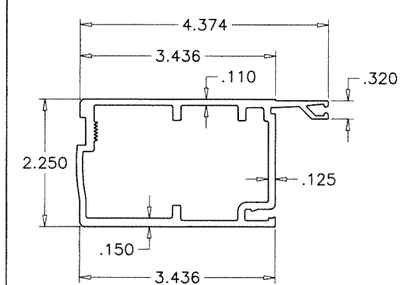

E8 MEETING STILE – ACTIVE LEAF

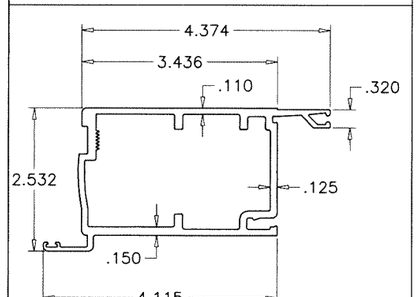

E8A ALT. MEETING STILE – ACTIVE LEAF

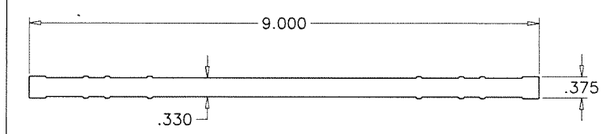

E13 HINGE BACKUP PLATE

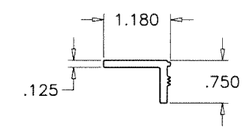

E12 SUPPORT ANGLE

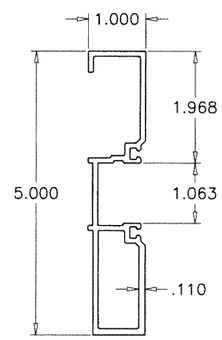

E3.1 NARROW DOOR JAMB

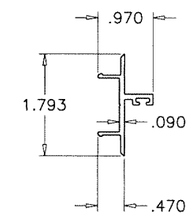

E3.2 NARROW JAMB DOOR STOP

Sealed: 8/30/2023

JALAL FAROOQ
LICENSE
No. 81223
STATE OF FLORIDA
PROFESSIONAL ENGINEER

FL #22527

AL-FAROOQ CORPORATION
ENGINEERS & PRODUCT DEVELOPMENT
9360 SUNSET DRIVE, SUITE 220
MIAMI, FLORIDA 33173
(C.A.N. 3538)
TEL. (305) 264-8100 FAX. (305) 262-6978

COMP-ANL\W17-91ESW

SERIES-9000 ALUM OUTSWING FRENCH DOOR (L.M.I.)

E.S. WINDOWS, LLC
3550 N.W. 49 STREET
MIAMI, FL. 33142
TEL. (305) 638-5151 FAX. (305) 638-5158

revisions:

no	date	by	description

date: 10-19-17
scale: 3/8" = 1"
dr. by: TARIQ
chk. by:

drawing no.
W17-91

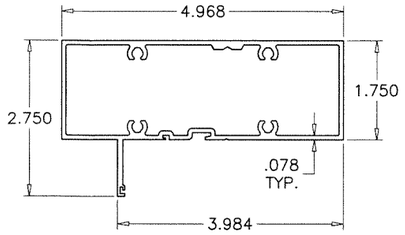

T5 TRANSOM HEAD S-8000

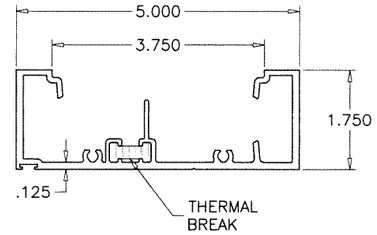

T5A TRANSOM HEAD S-8000T

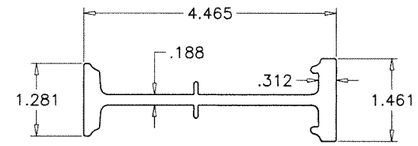

T5C TRANSOM REINFORCING

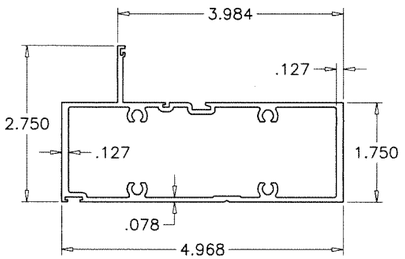

T6 TRANSOM HORIZONTAL S-8000

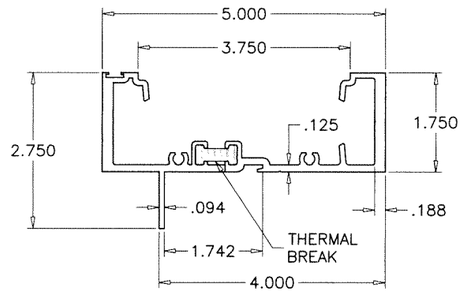

T5B TRANSOM HORIZONTAL S-8000T

THERMAL BREAK:
FRAME MEMBERS FILLED AND DEBRIDGED USING
'BAYDUR TB 100-30' MANUFACTURED BY
'BAYER MATERIALSCIENCE, LLC.

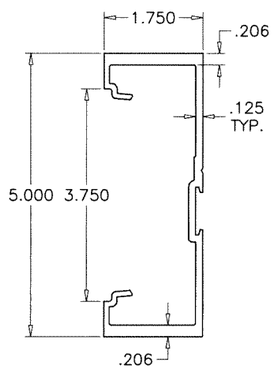

T7 TRANSOM JAMB S-8000

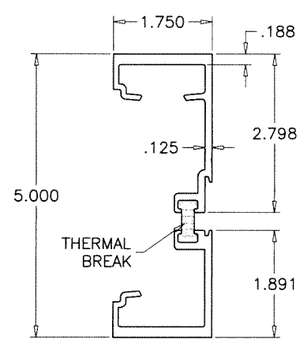

T7A TRANSOM JAMB S-8000T

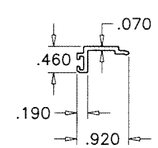

E21 DOOR STOP

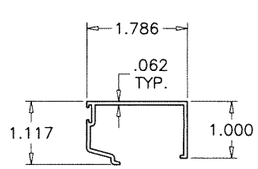

T9 TRANSOM GLASS STOP S-8000

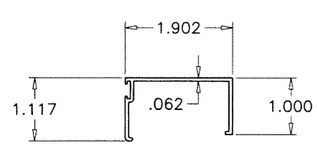

T9A TRANSOM GLASS STOP S-8000T

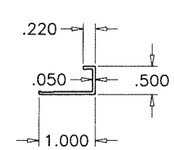

E22 DOOR STOP COVER

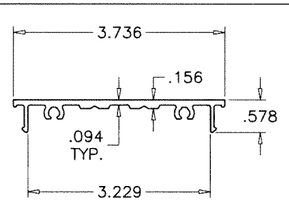

T8 JAMB FILLER S-8000

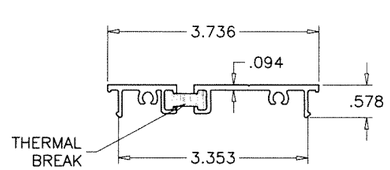

T8A TRANSOM SNAP-IN PLATE

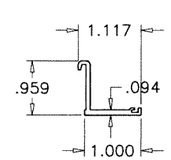

T10 TRANSOM GLAZING ADAPTER

Sealed: 8/30/2023

FL #22527

JALAL FAROOQ
LICENSE
No. 81223
STATE OF FLORIDA
PROFESSIONAL ENGINEER

AL-FAROOQ CORPORATION
ENGINEERS & PRODUCT DEVELOPMENT
9360 SUNSET DRIVE, SUITE 220
MIAMI, FLORIDA 33173 (C.A.N. 3538)
TEL. (305) 264-8100 FAX. (305) 262-6978

COMP-ANL\W17-91ESW

SERIES-9000 ALUM OUTSWING FRENCH DOOR (L.M.I.)

E.S. WINDOWS, LLC
3550 N.W. 49 STREET
MIAMI, FL. 33142
TEL. (305) 638-5151 FAX. (305) 638-5158

revisions:

no	date	by	description

date: 10-19-17
scale: 3/8" = 1"
dr. by: TARIQ
chk. by:

drawing no. W17-91

ITEM #	PART #	QUANTITY	DESCRIPTION	MATERIAL	MANF./SUPPLIER/REMARKS
E1	ES-9012	1	DOOR HEADER	6061-T6	–
E2	ES-9014	1	STANDARD THRESHOLD	6063-T6	–
E2.1	ES-9000-030	1	ALT. STANDARD THRESHOLD	6061-T6	–
E2.2	ES-6011	1	SCREW COVER	6063-T6	–
E2A	ES-9015	1	SADDLE THRESHOLD	6063-T6	–
E2B	ES-9026	1	HIGH THRESHOLD	6063-T6	–
E2C	ES-9027	1	THRESHOLD COVER	6063-T5	–
E2D	ES-9000-036	1	MEDIUM THRESHOLD	6063-T6	–
E3	ES-9013	2	DOOR JAMB	6063-T6	–
E3.1	ES-7530-213	2	NARROW DOOR JAMB	6063-T6	–
E3.2	ES-7530-214	2	NARROW JAMB DOOR STOP	6063-T6	–
E4	ES-9001	2	TOP RAIL	6063-T5	–
E5	ES-9002	2	STD. BOTTOM RAIL	6063-T6	–
E5A	ES-9000-031	2	HI-PROFILE BOTTOM RAIL	6063-T6	–
E6H	ES-9003	2	HINGE/LOCK STILE	6063-T5	–
E7	ES-9006	1	MEETING STILE – ACTIVE LEAF	6063-T5	–
E7A	–	1	ALT. MEETING STILE – ACTIVE LEAF	6063-T5	–
E8	ES-9007	1	MEETING STILE – INACTIVE LEAF	6063-T5	–
E8A	–	1	ALT. MEETING STILE – INACTIVE LEAF	6063-T5	–
E9	ES-9004	4	GLASS STOP (LAM. GLASS)	6063-T5	–
E9.1	ES-9029	4	GLASS STOP (INSUL. LAM. GLASS)	6063-T5	–
E10T	ES-9008	4	CORNER BLOCK –TOP	6063-T5	–
E10B	ES-9008	4	CORNER BLOCK – BOTTOM	6063-T5	–
E11T	ES-9009	4	CORNER PLATE – TOP	6063-T5	–
E11B	ES-9009	4	CORNER PLATE – BOTTOM	6063-T5	–
E12	ES-9010	4	SUPPORT ANGLE	6063-T5	3/4" X 1" X 1/8" X 9" LONG
E13	ES-9011	AS RQD.	HINGE BACKUP PLATE REINFORCEMENT	6063-T5	1-1/4" X 9" X 3/8" THK.
E13A	12-24 X 1/2"	4/ PLATE	HINGE BACKUP PLATE FASTENERS	ST. STEEL	FH MACHINE SCREWS
E14	ES-9020	1	LOCK BACKUP PLATE REINFORCEMENT	6063-T5	10" LONG
E14A	8-32 X 1/2"	3/ PLATE	LOCK PLATE FASTENERS	ST. STEEL	PH MACHINE SCREWS
E15	ES-9016	AS RQD.	JAMB FILLER	6063-T6	–
E16	ES-9017	AS RQD.	REINFORCEMENT	6063-T6	–
E17	ES-9021	1/ CLOSER	CLOSER SUPPORT CLIPS (PAIR)	6063-T5	–
E18	ES-9022	1	CLOSER DOOR STOP	6063-T5	–
E19	ES-9023	1/ CLOSER	CLOSER COVER PLATE	6063-T5	–
E20	ES-9005	–	DOOR SWEEP	–	–
E21	ES-9051	–	DOOR STOP	–	–
E22	ES-9052	–	DOOR STOP COVER	–	–
E23	ES-9060	–	ASTRAGAL STILE	6063-T5	SECURED WITH #8 X 1/2" SMS AT 12" O.C.
M1	–	28	#12 x 1" P.H. ST/ST SMS	–	–
M2	–	AS RQD.	#12 – 24 x 1" F.H. ST/ST MS	–	–
M3	–	18	#8 – 32 x 1/2" P.H. ST/ST MS	–	–
M4	–	16	3/8" – 16 x 1" HEX. BOLT	–	–
M5	ES-9000-G01	AS RQD.	WEDGE GASKET	SILICONE	DUROMETER 70±5 SHORE A
M6	ES-9000-G02	AS RQD.	SPACER GASKET	EPDM	DUROMETER 70±5 SHORE A
M7	ES-9000-G03	AS RQD.	BULB VINYL, BASE-POLYPROPILENE, BULB-TPE	–	ULTRAFAB, DUROMETER 73±5 SHORE A
M8	ES-9000-B01	AS REQD.	SETTING BLOCKS (LAM. GLASS) AT 1/4 POINTS	EPDM	DUROMETER 80±5 SHORE A
M8.1	ES-9000-B02A	AS REQD.	SETTING BLOCKS (INSUL. LAM. GLASS) AT 1/4 POINTS	EPDM	DUROMETER 80±5 SHORE A
M9	–	AS RQD.	HINGE 4 1/2" x 4"	–	–
M9A	–	AS RQD.	OFFSET PIVOT HINGE	ALUMINUM	–
M9B	60AT 2-TLG	AS REQD.	RESIDENTIAL HINGE	–	DR. HAHN
M12	–	1	3 POINT LOCK	–	–
M13	–	1	KEY CYLINDER	–	–
M14	–	1	THUMBTURN	–	–
M15	–	1	2 POINT LOCK	–	–
M16	–	1/ LEAF	DOOR CLOSURE	–	–
M17	–	2	PUSH – PULL	–	–
M19	W13273NK	AS RQD.	PILE W'STRIPPING – HEADER	WOOL	–
M20	W23451NK	AS RQD.	PILE – MTG STILES	WOOL	–
M22	–	1/ CLOSER	CHANNEL SPACER 5/8" X 1-7/8"	–	–
M23	–	2	THRESHOLD CLIP	–	–

ITEM #	PART #	QUANTITY	DESCRIPTION	MATERIAL	MANF./SUPPLIER/REMARKS
M26	–	2/ CLOSER	1/4 – 20 x 2" HEX. BOLT	–	–
M27	–	3/ CLOSER	#10 x 1" P.H. ST/ST SMS	–	–
M28	–	6/ CLOSER	#10 x 1" F.H. ST/ST SMS	–	–
M29	–	3/ CLOSER	#10 x 1" F.H. ST/ST SMS	–	–
M30	–	AS RQD.	#10 x 1 1/2" F.H. ST/ST SMS, AT 23" O.C.	ST. STEEL	–
M31	W13351NK	AS RQD.	PILE – DOOR SWEEP	WOOL	–
M32	W13275NK	AS RQD.	PILE – HEADER	WOOL	–
T1	ES-9506	–	TRANSOM HEADER Series 9500	6063-T6	–
T2	ES-9019	–	TRANSOM ADAPTER	6063-T5	–
T3	ES-9018	–	TRANSOM GLASS STOP	6063-T5	–
T4	ES-9502	–	HEAD COVER	6063-T5	–
T5	ES-8005	AS REQD.	TRANSOM HEAD S-8000	6005-T6	–
T5A	ES-8000T-018	AS REQD.	TRANSOM HEAD S-8000T	6005-T5	–
T5B	ES-8000T-017	AS REQD.	TRANSOM HORIZONTAL S-8000T	6061-T6	–
T5C	ES-8000T-006	AS REQD.	TRANSOM REINFORCING	6005-T5	–
T6	ES-8013	AS REQD.	HORIZONTAL AT DOOR S-8000	6061-T6	–
T7	ES-8012	AS REQD.	TRANSOM JAMB S-8000	6005-T6	–
T7A	ES-8000T-009T	AS REQD.	TRANSOM JAMB S-8000T	6005-T6	–
T8	ES-8003	AS REQD.	JAMB FILLER S-8000	6005-T5	–
T8A	ES-8000T-003	AS REQD.	HEAD/JAMB FILLER S-8000T	6005-T5	–
T9	ES-8006	AS REQD.	TRANSOM GLASS STOP S-8000	6063-T5	–
T9A	ES-8000T-005	AS REQD.	TRANSOM GLASS STOP S-8000T	6063-T5	–
T10	ES-8014	AS REQD.	TRANSOM GLAZING ADAPTER	6063-T6	–
MT1	–	–	#10 x 1/2" F.H. ST/ST SMS	–	–
MT2	–	–	TRIM GASKET	SILICONE	–
MT3	–	–	INTERIOR SPACER 1/4" x 1/4"	FOAM	–
MT4	–	AS REQD.	SETTING BLOCKS (1/16" x 3/4") AT 1/4 POINTS	EPDM	DUROMETER 80±5 SHORE A
MT4A	–	AS REQD.	SETTING BLOCKS (3/16" X 1/2") AT 1/4 POINTS	EPDM	DUROMETER 85±5 SHORE A
MT4B	ES-7530-B01A	AS REQD.	SETTING BLOCKS AT 1/4 POINTS	EPDM	DUROMETER 80±5 SHORE A
MT5	ES-8010	AS REQD.	INTERIOR GLAZING GASKET	EPDM	DUROMETER 60±5 SHORE A
MT6	ES-8011A	AS REQD.	BUMP-ON GLASS SPACER	SILICONE	DUROMETER 85±5 SHORE A
MT7	ES-8009	AS REQD.	SILICONE STOP	SILICONE	–

Sealed: 8/30/2023

JALAL FAROOQ
LICENSE
No. 81223
STATE OF FLORIDA
PROFESSIONAL ENGINEER

FL #22527

AL-FAROOQ CORPORATION
ENGINEERS & PRODUCT DEVELOPMENT
9360 SUNSET DRIVE, SUITE 220
MIAMI, FLORIDA 33173
TEL. (305) 264-8100 FAX. (305) 262-6978
(C.A.N. 3638)

COMP-ANL\W17-91ESW

SERIES-9000 ALUM OUTSWING FRENCH DOOR (L.M.I.)

E.S. WINDOWS, LLC
3550 N.W. 49 STREET
MIAMI, FL. 33142
TEL. (305) 638-5151 FAX. (305) 638-5158

revisions:

no	date	by	description

date: 10-19-17
scale: 3/8" = 1"
dr. by: TARIQ
chk. by:

drawing no.
W17-91

LOCKS: (See Tables On Sheets 2 Thru 6 For Load Capacities)

OPTION #1: LIMIT MAX. LOADS TO ±80.0 PSF

ACTIVE & INACTIVE LEAF:

CONCEALED VERTICAL ROD PANIC EXIT DEVICE BY
'JACKSON PANIC SYSTEM' #1285 LOCATED AT 41"
FROM SILL AT EACH LEAF.
FASTENED WITH
(1) #14 X 1" HH SELF DRILLING SCREW AT ONE END AND
(2) #12-24 X 1/2" OH MACHINE SCREWS AT OTHER END

OR

CONCEALED VERTICAL ROD PANIC EXIT DEVICE BY
'ADAMS RITE' LOCATED AT 40" FROM SILL
AT EACH LEAF.
FASTENED WITH
(2) #10-32 X 3/4" FH MACHINE SCREWS AT ONE END AND
(2) #10-24 X 1/2" FH MACHINE SCREWS AT OTHER END

OPTION #2: LIMIT MAX. LOADS TO +80.0, -90.0 PSF

ACTIVE & INACTIVE LEAF:

CONCEALED VERTICAL ROD PANIC EXIT DEVICE BY
'JACKSON PANIC SYSTEM' #2086 LOCATED AT 41"
FROM SILL AT EACH LEAF.
FASTENED WITH
(1) #14 X 1" HH SELF DRILLING SCREW AT ONE END AND
(2) #12-24 X 1/2" OH MACHINE SCREWS AT OTHER END

OR

CONCEALED VERTICAL ROD PANIC EXIT DEVICE BY
'DOR-O-MATIC' LOCATED AT 40" FROM SILL
AT EACH LEAF.
FASTENED WITH
(2) #12-24 X 1/2" FH MACHINE SCREWS AT ONE END

OPTION #2.1: LIMIT MAX. LOADS TO ±90.0 PSF

ACTIVE & INACTIVE LEAF:

CONCEALED VERTICAL ROD PANIC EXIT DEVICE SERIES 3347
BY 'VON DUPRIN' LOCATED AT 40" FROM SILL
AT EACH LEAF.
FASTENED WITH
(2) #10-32 X 3/4" FH MACHINE SCREWS AT ONE END AND
(2) #10-24 X 1/2" FH MACHINE SCREWS AT OTHER END

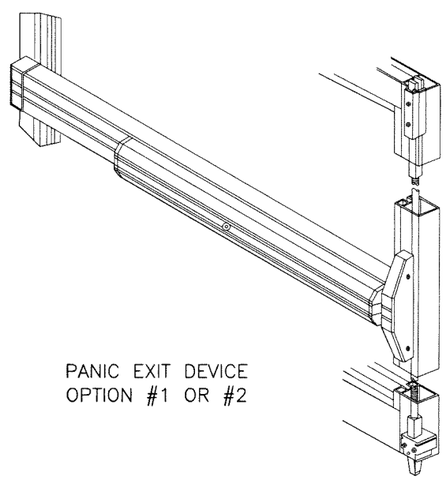

PANIC EXIT DEVICE
OPTION #1 OR #2

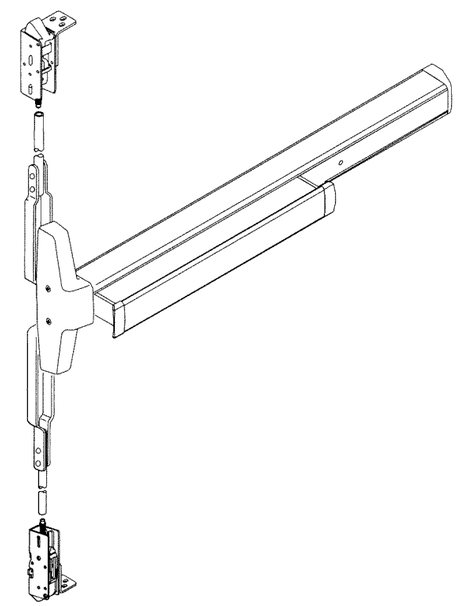

CONCEALED BOLTS ENGAGEMENT INTO FRAMES = 1/2" MIN. TYP.

Sealed: 8/30/2023

JALAL FAROOQ
LICENSE
No. 81223
STATE OF FLORIDA
PROFESSIONAL ENGINEER

FL #22527

AL-FAROOQ CORPORATION
ENGINEERS & PRODUCT DEVELOPMENT
9360 SUNSET DRIVE, SUITE 220
MIAMI, FLORIDA 33173 (C.A.N. 3538)
TEL. (305) 264-8100 FAX. (305) 262-6978

COMP-ANL\W17-91ESW

SERIES-9000 ALUM OUTSWING FRENCH DOOR (L.M.I.)

E.S. WINDOWS, LLC
3550 N.W. 49 STREET
MIAMI, FL. 33142
TEL. (305) 638-5151 FAX. (305) 638-5158

revisions:

no	date	by	description

date: 10-19-17
scale: 3/8" = 1"
dr. by: TARIQ
chk. by:

drawing no.
W17-91

LOCKS: (See Tables On Sheets 2 Thru 6 For Load Capacities)

OPTION #3:

ACTIVE LEAF:

KEY OPERATED THREE POINT LOCK SYSTEM 4015/4016 BY 'ADAMS RITE' WITH CONCEALED FLUSH BOLTS AT TOP & BOTTOM OF LOCK STILE AND A THUMB TURN ON THE INTERIOR, LOCATED AT 40" FROM BOTTOM OF PANEL FASTENED WITH
(2) #12-24 X 1/2" FH MACHINE SCREWS

INACTIVE LEAF:

MANUALLY OPERATED TWO POINT LOCK SYSTEM 1880/81 BY 'ADAMS RITE' WITH CONCEALED FLUSH BOLTS AT TOP & BOTTOM OF LOCK STILE AND A THUMB TURN ON THE INTERIOR, LOCATED AT 40" FROM BOTTOM OF PANEL FASTENED WITH
(2) #8-32 X 1/4" PH MACHINE SCREWS

ACTIVE LEAF:

SURFACE MOUNT 3 POINT MORTISE LOCK SYSTEM
BY 'INTERLOCK USA'
KEY OPERATED ON EXTERIOR AND THUMB TURN ON INTERIOR
LEVER TYPE HANDLE AT 40" FROM BOTTOM
ACTIVATES SHOOT BOLTS ENGAGING AT HEAD AND SILL
FASTENED WITH
(2) #10 X 3/4" FH SMS

INACTIVE LEAF:

SURFACE MOUNT 2 POINT LOCK SYSTEM
BY 'INTERLOCK USA'
LEVER TYPE HANDLE AT 40" FROM BOTTOM
ACTIVATES SHOOT BOLTS ENGAGING AT HEAD AND SILL
FASTENED WITH
(2) #10 X 3/4" FH SMS

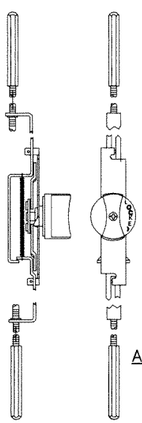

ADAMS RITE
2 POINT
LOCK

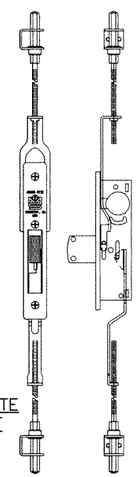

ADAMS RITE
3 POINT
LOCK

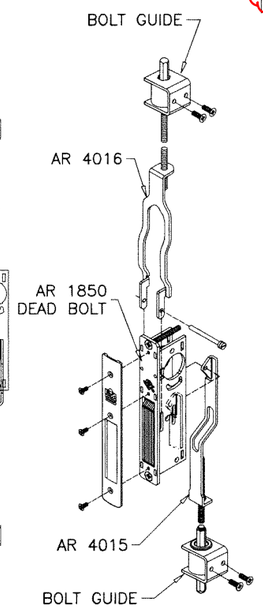

CONCEALED BOLTS ENGAGEMENT INTO FRAMES = 1/2" MIN. TYP.

Sealed: 8/30/2023

JALAL FAROOQ
LICENSE
No. 81223
STATE OF FLORIDA
PROFESSIONAL ENGINEER

FL #22527

AL-FAROOQ CORPORATION
ENGINEERS & PRODUCT DEVELOPMENT
9360 SUNSET DRIVE, SUITE 220
MIAMI, FLORIDA 33173 (C.A.N. 3538)
TEL. (305) 264-8100 FAX. (305) 262-6978

COMP-ANL\W17-91ESW

SERIES-9000 ALUM OUTSWING FRENCH DOOR (L.M.I.)

E.S. WINDOWS, LLC
3550 N.W. 49 STREET
MIAMI, FL. 33142
TEL. (305) 638-5151 FAX. (305) 638-5158

revisions:

no	date	by	description

date: 10-19-17
scale: 3/8" = 1"
dr. by: TARIQ
chk. by:

drawing no.
W17-91

HINGES: (See Tables On Sheets 2 Thru 6 For Load Capacities)

OPTION #1:

OFFSET PIVOT HINGES
ALUMINUM AT TOP AND BOTTOM
FASTENED TO FRAME AND THRESHOLD WITH
#10-24 X 1/2" FH THREAD CUTTING SCREWS
(2) AT THRESHOLD, (2) AT JAMB BOTTOM
(3) AT FRAME HEAD
HEAVY DUTY BRASS OR BRONZE AT MIDSPAN
FASTENED TO FRAME AND LEAF WITH
(4) 1/4-20 X 5/8" MS

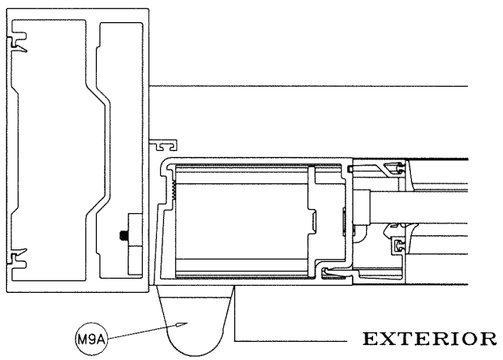

OPTION #2:

4 X 4-3/4" ST. STEEL BALL BEARING BUTT HINGES
LOCATED AT
11" FROM TOP & BOTTOM AND AT MIDSPAN
FASTENED TO DOOR FRAME AND LEAF STILE WITH
(4) #12-24 X 1/2" FH MACHINE SCREWS PER HASP

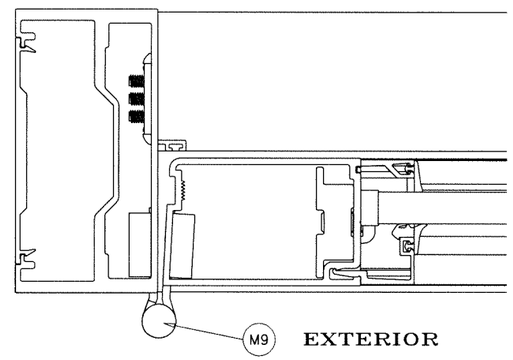

OPTION #2.1:

4 X 4-3/4" ST. STEEL BALL BEARING BUTT HINGES
(4) PER LEAF
(1) AT 9-5/8" FROM TOP TO CL OF HINGE
(1) AT 10-5/16" FROM BOTTOM TO CL OF HINGE
(2) INTERMEDIATE HINGES EQUALLY SPACED FROM
TOP AND BOTTOM HINGE
FASTENED TO DOOR FRAME AND LEAF STILE WITH
(4) #12-24 X 1/2" FH MACHINE SCREWS PER HASP

OPTION #3: LIMIT MAX. LOADS TO ±90.0 PSF

SERIES 60AT (DR HAHN A701) DIE CAST ALUMINUM HINGE
BY 'DR HAHN'
(2) HINGES PER LEAF AT 6" FROM TOP & BOTTOM

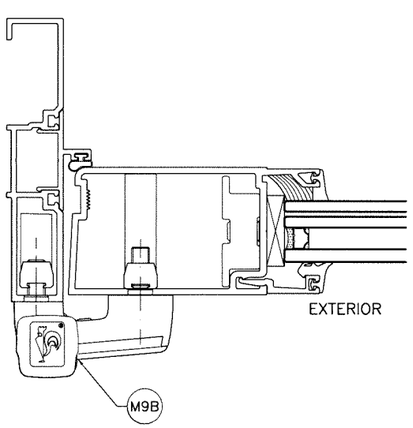

Sealed: 8/30/2023

JALAL FAROOQ
LICENSE
No. 81223
STATE OF FLORIDA
PROFESSIONAL ENGINEER

FL #22527

AL-FAROOQ CORPORATION
ENGINEERS & PRODUCT DEVELOPMENT
9360 SUNSET DRIVE, SUITE 220
MIAMI, FLORIDA 33173 (C.A.N. 3538)
TEL. (305) 264-8100 FAX. (305) 262-6978
COMP-ANL\W17-91ESW

SERIES-9000 ALUM OUTSWING FRENCH DOOR (L.M.I.)

E.S. WINDOWS, LLC
3550 N.W. 49 STREET
MIAMI, FL. 33142
TEL. (305) 638-5151 FAX. (305) 638-5158

revisions:

no	date	by	description

date: 10-19-17
scale: 3/8" = 1"
dr. by: TARIQ
chk. by:

drawing no. W17-91

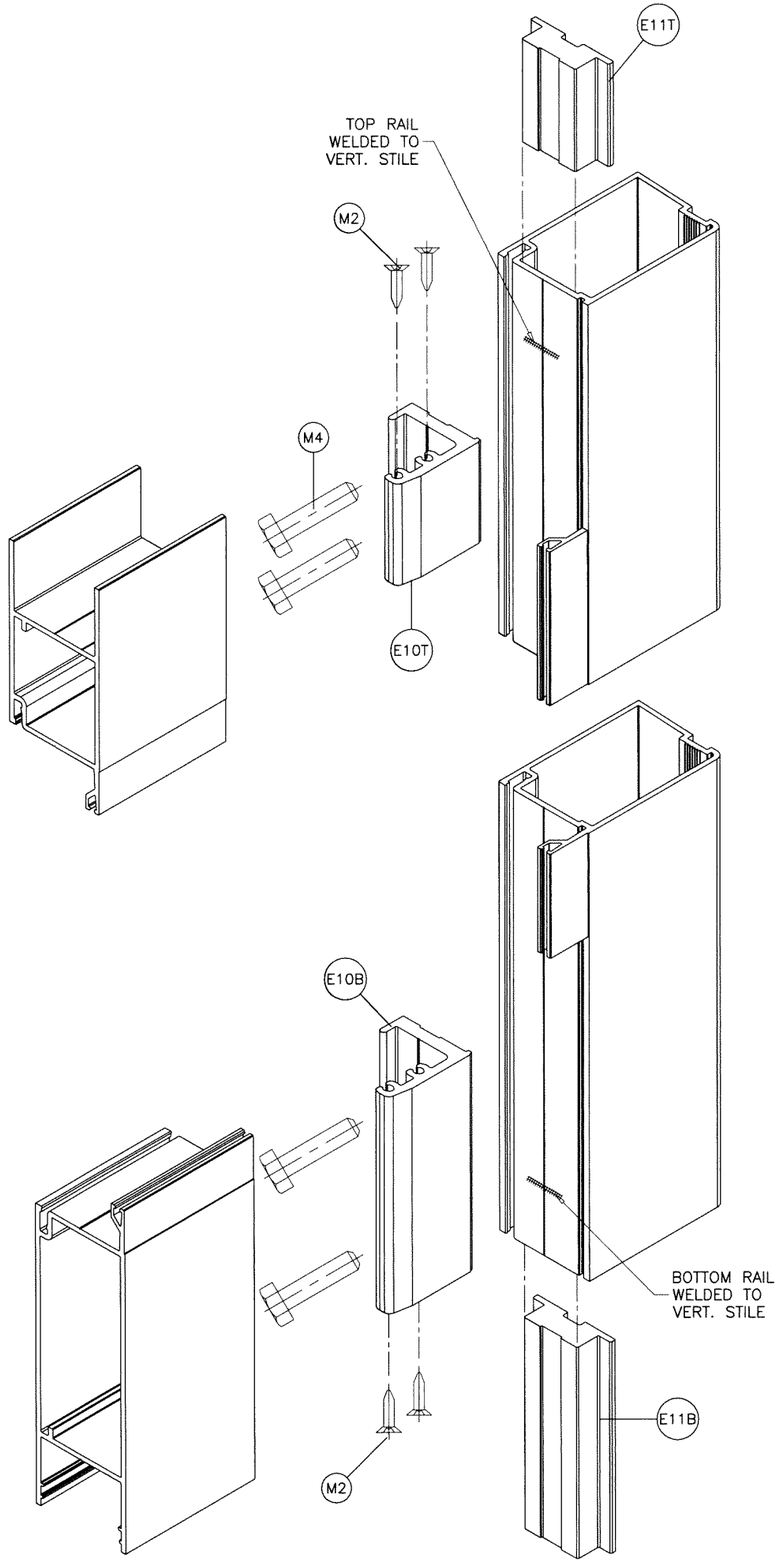

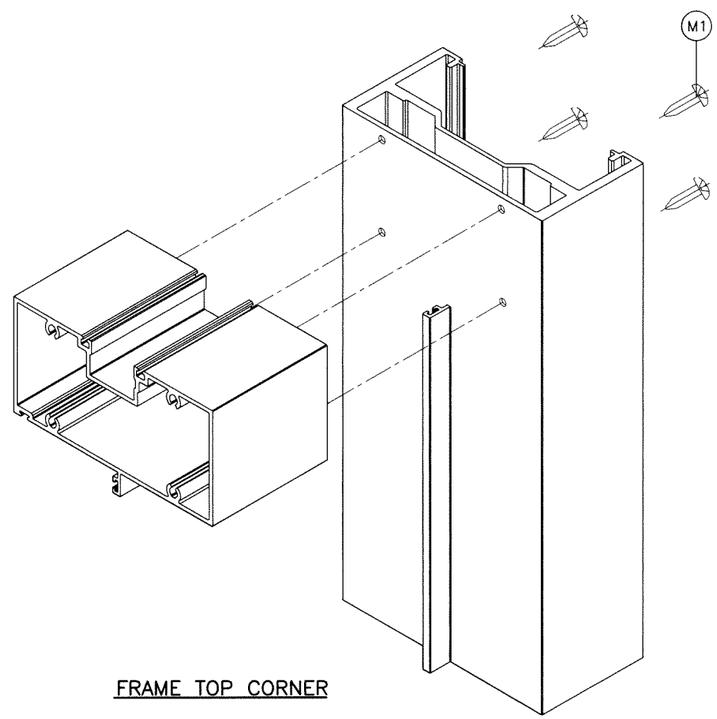

FRAME TOP CORNER

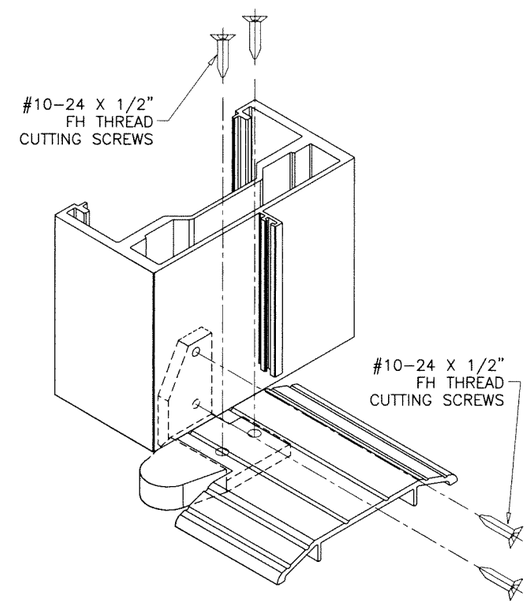

PIVOT THRESHOLD CORNER

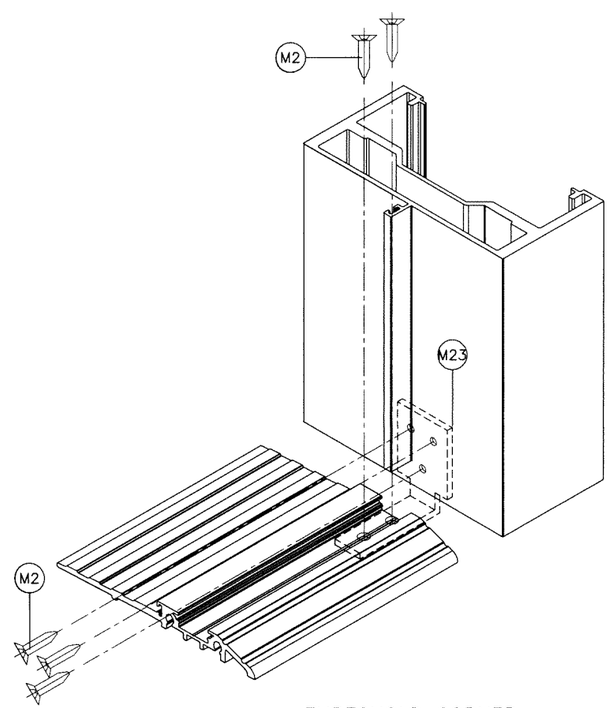

THRESHOLD CORNER

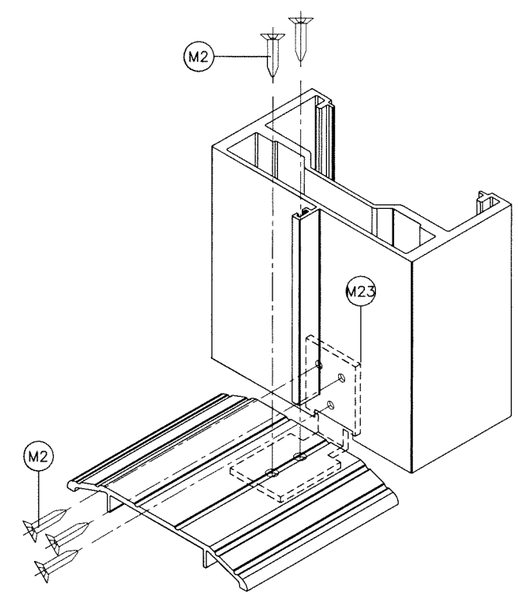

THRESHOLD CORNER

Sealed: 8/30/2023

JALAL FAROOQ
LICENSE
No. 81223
STATE OF FLORIDA
PROFESSIONAL ENGINEER

FL #22527

AL-FAROOQ CORPORATION
ENGINEERS & PRODUCT DEVELOPMENT
9360 SUNSET DRIVE, SUITE 220
MIAMI, FLORIDA 33173 (C.A.N. 3538)
TEL. (305) 264-8100 FAX. (305) 262-6978

COMP-ANL\W17-91ESW

SERIES-9000 ALUM OUTSWING FRENCH DOOR (L.M.I.)

E.S. WINDOWS, LLC
3550 N.W. 49 STREET
MIAMI, FL. 33142
TEL. (305) 638-5151 FAX. (305) 638-5158

revisions:

no	date	by	description

date: 10-19-17
scale: 3/8" = 1"
dr. by: TARIQ
chk. by:

drawing no.
W17-91

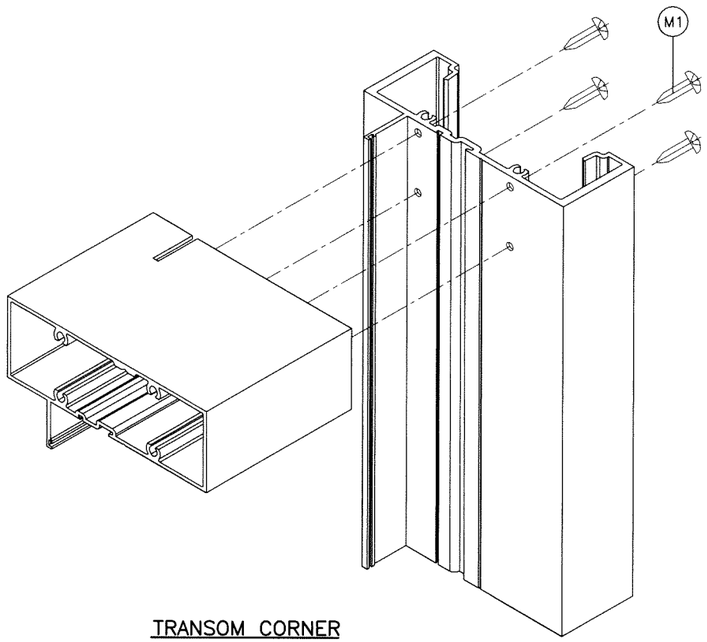

TRANSOM CORNER
SERIES-8000 WINDOW WALL

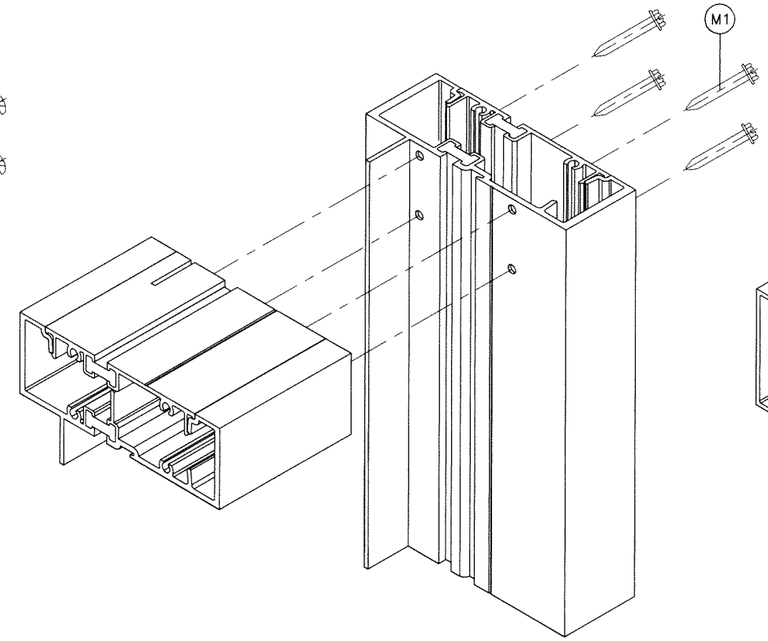

TRANSOM CORNER
SERIES-8000T WINDOW WALL

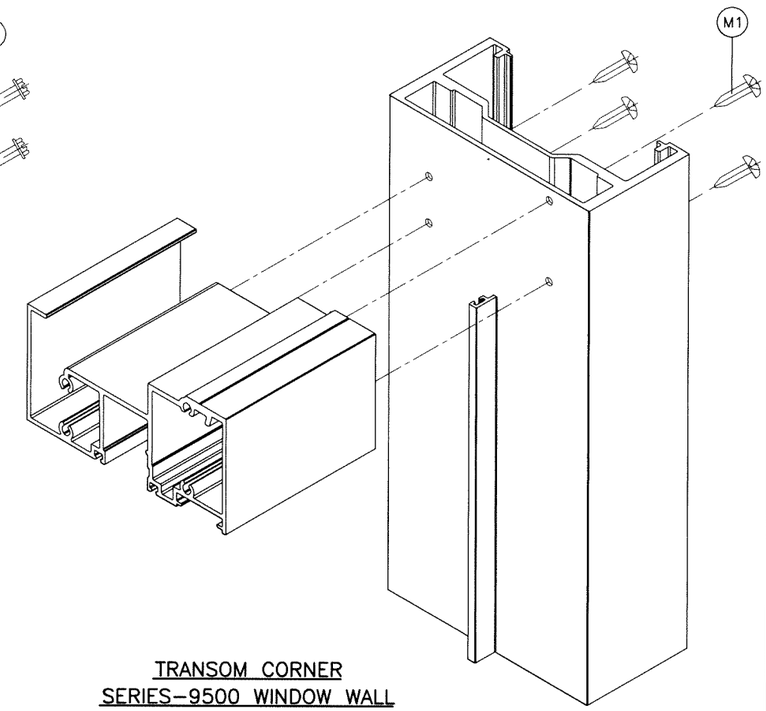

TRANSOM CORNER
SERIES-9500 WINDOW WALL

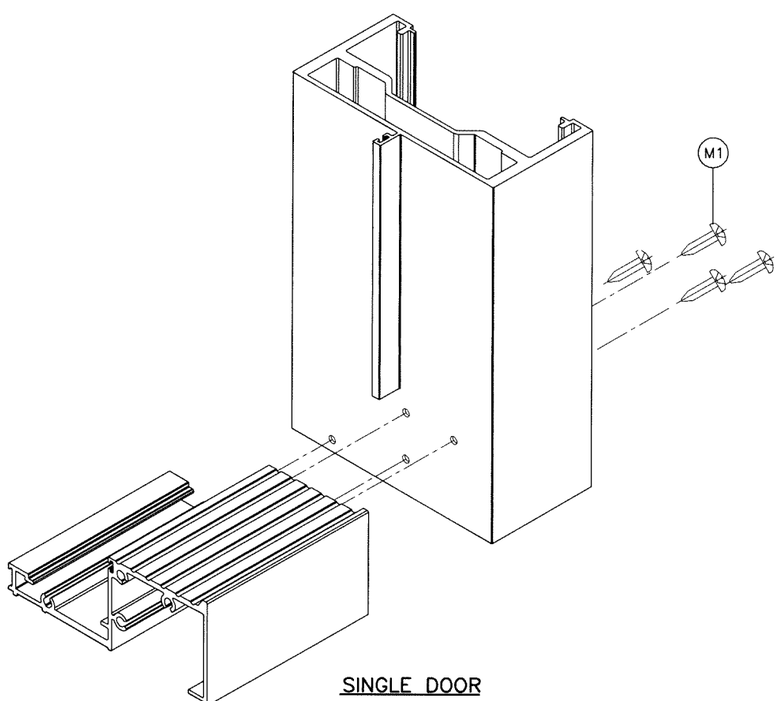

SINGLE DOOR
MED. & HI-THRESHOLD CORNER

Sealed: 8/30/2023

JALAL FAROOQ
LICENSE
No. 81223
STATE OF FLORIDA
PROFESSIONAL ENGINEER

FL #22527

AL-FAROOQ CORPORATION
ENGINEERS & PRODUCT DEVELOPMENT
9360 SUNSET DRIVE, SUITE 220
MIAMI, FLORIDA 33173 (C.A.N. 3538)
TEL. (305) 264-8100 FAX. (305) 262-6978
COMP-ANL\W17-91ESW

SERIES-9000 ALUM OUTSWING FRENCH DOOR (L.M.I.)

E.S. WINDOWS, LLC
3550 N.W. 49 STREET
MIAMI, FL. 33142
TEL. (305) 638-5151 FAX. (305) 638-5158

revisions:

no	date	by	description

date: 10-19-17
scale: 3/8" = 1"
dr. by: TARIQ
chk. by:

drawing no.
W17-91