"Delivering Excellence Every Day"

Miami-Dade County HVHZ Electronic Roof Permit Form
Single Ply Membrane Parapet Wall Flashing Detail

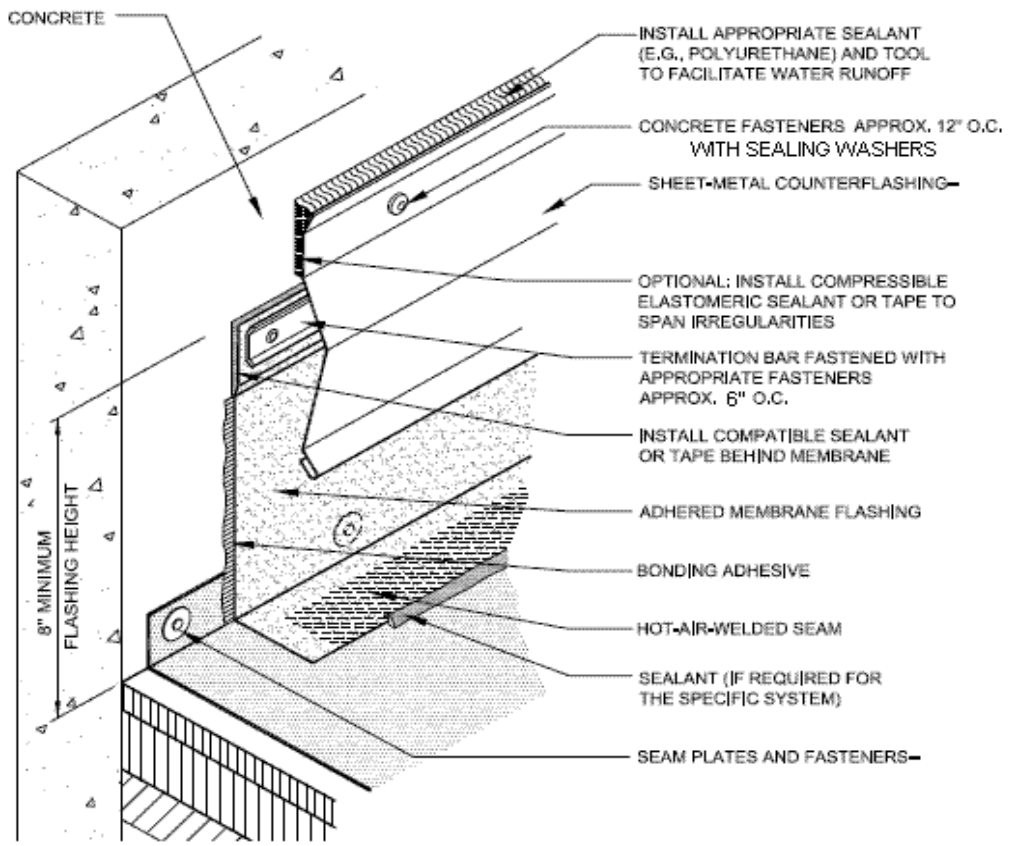

Provide Component Information

Roof Mean Height: 3 ft.

Coping Metal Type and Size: N/A

Continuous Cleat: N/A

Wall Flashing Material: TPO 60 MIL ☑ Fully Adhered ☐ Mech. Attached

Surfacing: TPO

Single Ply Membrane Type: TPO 60 MIL

Top Insulation Layer Type: TAPPERED 1/8

Base Insulation Layer Type: N/A

Wood Nailer Type & Size: N/A

Wood Nailer Attachment: N/A

Deck Type: CONCREAT