ES WINDOWS, INC.
SERIES SGD 2020 SLIDING GLASS DOOR
LARGE AND SMALL MISSILE IMPACT

DOORS RATED FOR LARGE AND SMALL MISSILE IMPACT.
IMPACT SHUTTERS ARE NOT REQUIRED.

LAMINATED GLASS AND INSULATED-LAMINATED GLASS LARGE AND SMALL MISSILE IMPACT.

SERIES SGD 2020 SLIDING GLASS DOOR

APPLICABLE EGRESS REQUIREMENTS PER FBC TO BE REVIEWED BY BUILDING OFFICIAL.

THIS PRODUCT HAS BEEN DESIGNED AND TESTED TO COMPLY WITH THE REQUIREMENTS OF THE FLORIDA BUILDING CODE 8TH EDITION (2023) INCLUDING HIGH VELOCITY HURRICANE ZONE (HVHZ).

THESE DOORS ARE APPROVED FOR AIR AND WATER INFILTRATION.

ANCHORS SHALL BE AS LISTED, SPACED AS SHOWN ON DETAILS. ANCHORS EMBEDMENT TO BASE MATERIAL SHALL BE BEYOND WALL DRESSING OR STUCCO.

ANCHORING OR LOADING CONDITIONS NOT SHOWN IN THESE DETAILS ARE NOT PART OF THIS APPROVAL.

MATERIALS INCLUDING BUT NOT LIMITED TO STEEL / METAL SCREWS THAT COME INTO CONTACT WITH OTHER DISSIMILAR MATERIALS SHALL MEET THE REQUIREMENTS OF THE FLORIDA BUILDING CODE 8TH EDITION (2023) SECTION AS APPLICABLE.

METAL STRUCTURES BY OTHERS TO BE DESIGNED TO SUPPORT THE LOADS IMPOSED BY THIS GLAZING SYSTEM AND TO TRANSFER SUCH LOADS TO THE BUILDING MAIN STRUCTURE.

ULTIMATE LOAD OBTAINED FROM ASCE 7-22, MULTIPLY BY 0.6 SHALL BE LESS THAN OR EQUAL TO MAX. DESIGN LOAD IN THIS DOCUMENT. THE DESIGN LOADS SHOWN IN THIS DOCUMENT ARE ALLOWABLE DESIGN LOADS.

MANUFACTURER'S LABEL SHALL BE LOCATED ON A READILY VISIBLE LOCATION IN ACCORDANCE WITH SECTION 1709.9.3 OF FLORIDA BUILDING CODE LABELING TO COMPLY WITH SECTION 1709.9.2.

INSTRUCTIONS:

USE CHARTS AS FOLLOWS

STEP 1 DETERMINE DESIGN WIND LOAD REQUIREMENT BASED ON WIND VELOCITY, BLDG HEIGHT, WIND ZONE USING APPLICABLE ASCE 7-22 STANDARD.

STEP 2 SEE ALLOWABLE CONFIGURATIONS ON SHEETS E6 THROUGH E12. SEE CHARTS ON SHEET G1 FOR ALLOWABLE DESIGN LOAD BASED ON DESIRED GLASS TYPE. SEE CHARTS ON SHEET K1 FOR INTERLOCK DESIGN LOAD. SEE SHEET K2 FOR SILL RAISER OPTION FOR WATER INFILTRATION.

STEP 3 FOR FREESTANDING JAMB USED AT 2 TRACK OR 3 TRACK, SEE CHARTS ON SHEET J1 AND J2 FOR REINFORCING LEVEL AND CAPACITIES.

STEP 4 FOR ANCHORED JAMB, SEE OPTIONS AND SPACING ON SHEETS J3 AND J4.

STEP 5 USING CHARTS ON SHEET A1 SELECT ANCHOR OPTION WITH DESIGN RATING MORE THAN DESIGN LOAD SPECIFIED IN STEP 1 ABOVE.

STEP 6 THE LOWEST VALUE RESULTING FROM STEPS 2 THRU 5 SHALL APPLY TO ENTIRE SYSTEM.

ABBREVIATIONS AND SYMBOLS

D.L.O. - DAYLITE OPENING
F.H. - FRAME HEIGHT
F.W. - FRAME WIDTH
LG. - LONG
STL. - STEEL
ALUM. - ALUMINUM
MULL. - MULLION
HORIZ. - HORIZONTAL
W/ - WITH
W/O - WITHOUT
VERT.- VERTICAL
T.H.- TRANSOM HEIGHT

℄ - CENTER LINE
S.S. - STAINLESS STEEL
H.S. - HEAT STRENGTHENED
SSG - STRUCTURAL SILICONE GLAZED
TEMP. - TEMPERED
O.C. - ON CENTER
G.B. - GLASS BITE

SECTION NUMBER
X
XX
SHEET NUMBER

FL #22267

LIMITATIONS OF USE

A- THIS PRODUCT EVALUATION DOCUMENT (P.E.D.) PREPARED BY THIS ENGINEER IS GENERIC AND DOES NOT PROVIDE INFORMATION FOR A SITE SPECIFIC PROJECT; i.e. WHERE THE SITE CONDITIONS DEVIATE FROM THE P.E.D.

B- CONTRACTOR TO BE RESPONSIBLE FOR THE SELECTION, PURCHASE AND INSTALLATION OF THIS PRODUCT BASED ON THIS PRODUCT EVALUATION PROVIDED HE/SHE DOES NOT DEVIATE FROM THE CONDITIONS DETAILED ON THIS DOCUMENT.

C- THIS PRODUCT EVALUATION DOCUMENT WILL BE CONSIDERED INVALID IF ALTERED BY ANY MEANS.

D- SITE SPECIFIC PROJECTS SHALL BE PREPARED BY A FLORIDA REGISTERED ENGINEER OR ARCHITECT WHICH WILL BECOME THE ENGINEER OF RECORD (E.O.R.) FOR THE PROJECT AND WHO WILL BE RESPONSIBLE FOR THE PROPER USE OF THE P.E.D.

E- THIS P.E.D. SHALL BEAR THE DATE AND ORIGINAL SEAL AND SIGNATURE OF THE PROFESSIONAL ENGINEER OF RECORD THAT PREPARED IT.

YIPING WANG P.E.
FLORIDA REGISTRATION
FL #55983
C.A.N. 28577
LICENSED
No 55983
STATE OF FLORIDA
PROFESSIONAL ENGINEER
October 23rd, 2024

MCY ENGINEERING, INC.
GLAZING CONSULTANTS
12781 MIRAMAR PARKWAY #301
MIRAMAR, FL. 33027 P: 305.271.0117
www.MCYEngineering.com mcy@mcyengineering.com

ES-SGD2020 SLIDING GLASS DOOR (LMI & SMI)

ES WINDOWS, INC.
10653 NE Quaybridge Ct.
Miami, FL 33138
TEL. (305) 624-7775

Rev. No.	Date	Drawn By	REVISION	Description
RB	10.08.2024	James		

Drawn Date	Scale
10.08.2024	AS SHOWN

DRAWING NO.
AD16–29

COVER

Sheet No.
01 OF 59

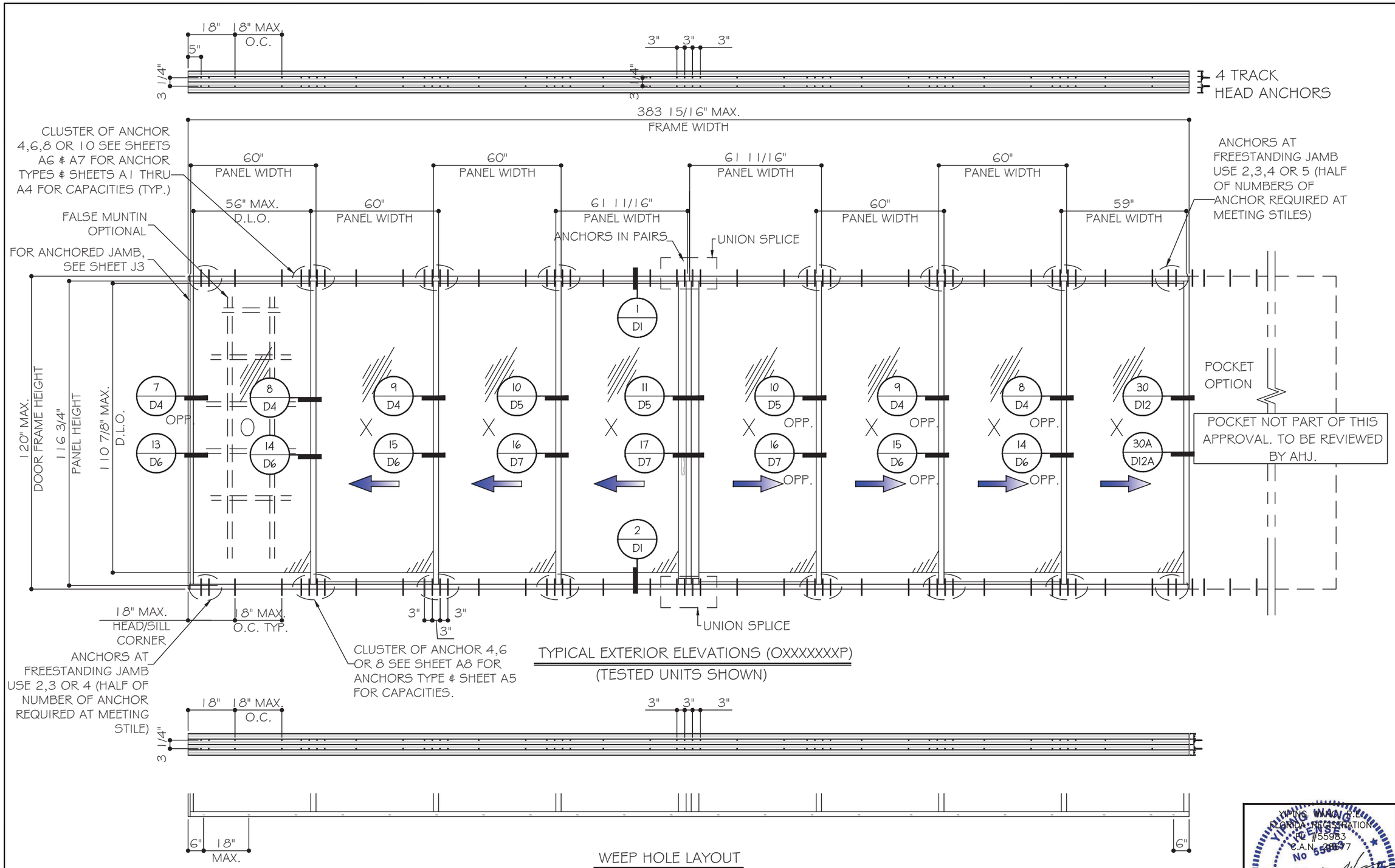

TYPICAL EXTERIOR ELEVATIONS (OXXXXXXXP)

(TESTED UNITS SHOWN)

WEEP HOLE LAYOUT

NOMINAL PANEL WIDTH = FRAME WIDTH / NO. OF PANEL
PANEL HEIGHT = FRAME HEIGHT - 2.625"
D.L.O. HEIGHT = DOOR FRAME HEIGHT - 9.125"
D.L.O. WIDTH = NOMINAL PANEL WIDTH - 4"

YIPING WANG, P.E.
FLORIDA REGISTRATION
FL #55983
C.A.N. 28877
STATE OF FLORIDA PROFESSIONAL ENGINEER
No 55983
October 23rd, 2024

MCY ENGINEERING, INC.
GLAZING CONSULTANTS
12781 MIRAMAR PARKWAY #301
MIRAMAR, FL. 33027
P: 305.271.0117
www.MCYEngineering.com mcy@mcyengineering.com

ES-SGD2020 SLIDING GLASS DOOR (LMI & SMI)

ES WINDOWS, INC.
10653 NE Quayibridge Ct.
Miami, FL 33138
TEL. (305) 624-7775

Rev. No.	Date	Drawn By	Description
RJS	10.08.2024	James	REVISION

Drawn Date 10.08.2024

Scale

DRAWING NO. AD16-29

E1

Sheet No. 02 OF 59

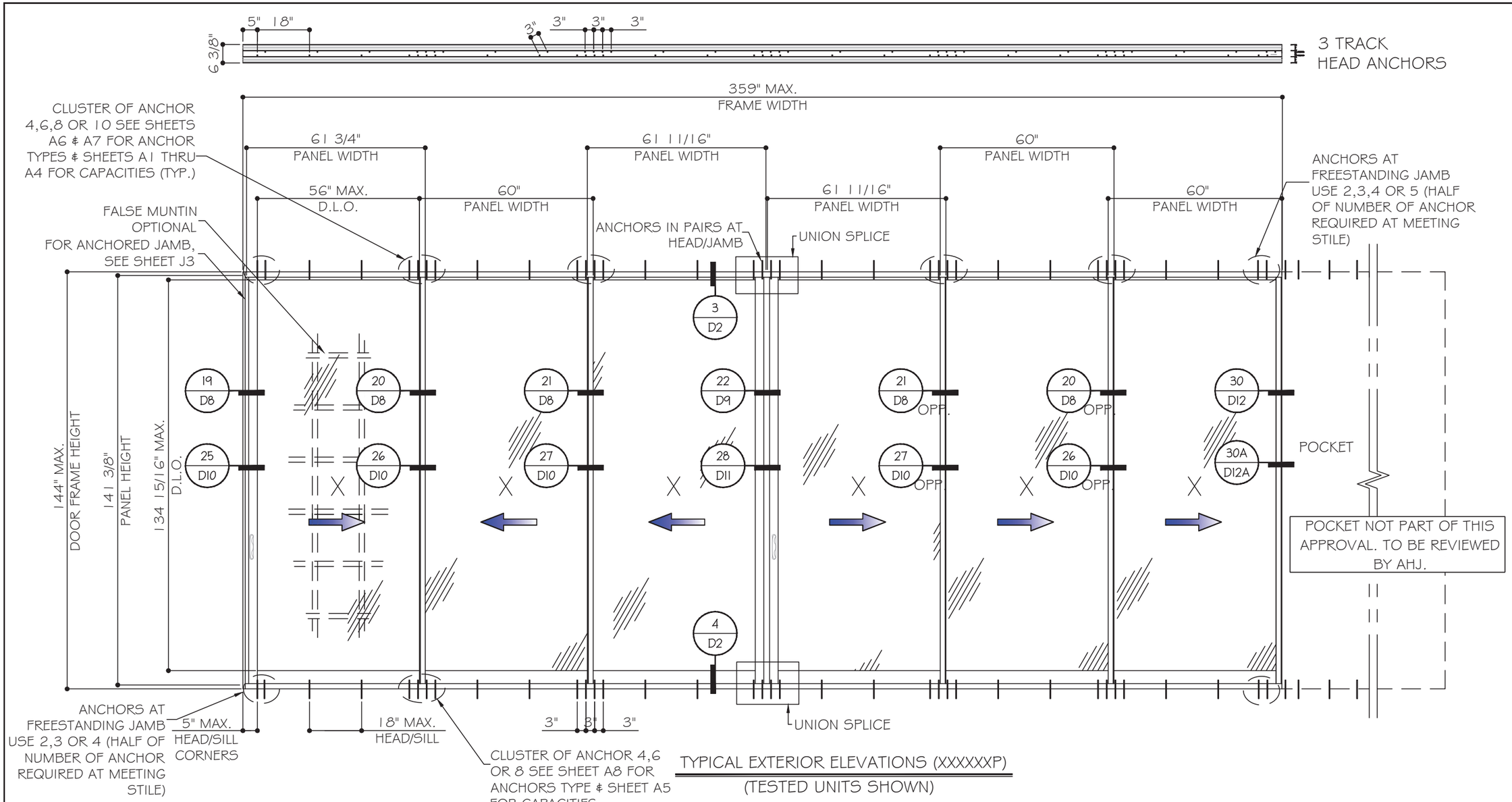

TYPICAL EXTERIOR ELEVATIONS (XXXXXXP)

(TESTED UNITS SHOWN)

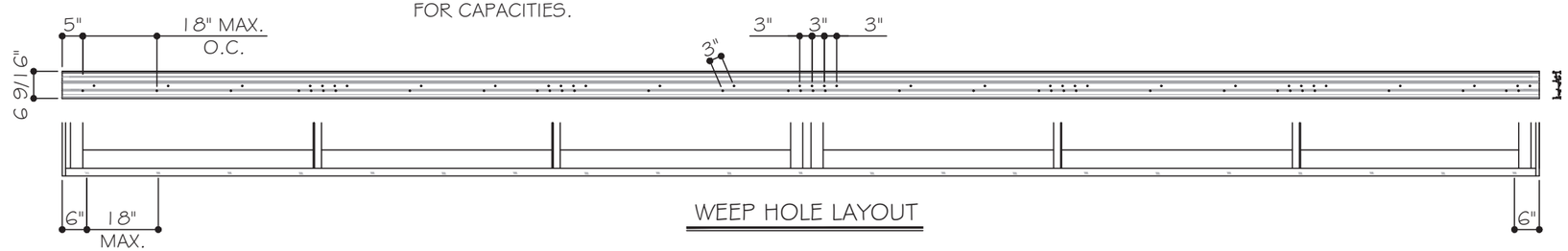

WEEP HOLE LAYOUT

NOMINAL PANEL WIDTH = FRAME WIDTH / NO. OF PANEL
PANEL HEIGHT = FRAME HEIGHT - 2.625"
D.L.O. HEIGHT = DOOR FRAME HEIGHT - 9.125"
D.L.O. WIDTH = NOMINAL PANEL WIDTH - 4"

YIMING WANG P.E.
FLORIDA REGISTRATION
FL #55983
C.A.N. 28677
STATE OF FLORIDA PROFESSIONAL ENGINEER No 55983
October 23rd, 2024

MCY ENGINEERING, INC.
GLAZING CONSULTANTS
12781 MIRAMAR PARKWAY #301
MIRAMAR, FL. 33027 P: 305.271.0117
www.MCYEngineering.com mcy@mcyengineering.com

ES-SGD2020 SLIDING GLASS DOOR (LMI & SMI)

ES WINDOWS, INC.
10653 NE Quaybridge Ct.
Miami, FL 33138
TEL. (305) 624-7775

Rev. No.	Date	Drawn By	REVISION	Description
RB	10.08.2024	James		

Drawn Date 10.08.2024 | Scale

DRAWING NO. AD16-29

E2

Sheet No. 03 OF 59

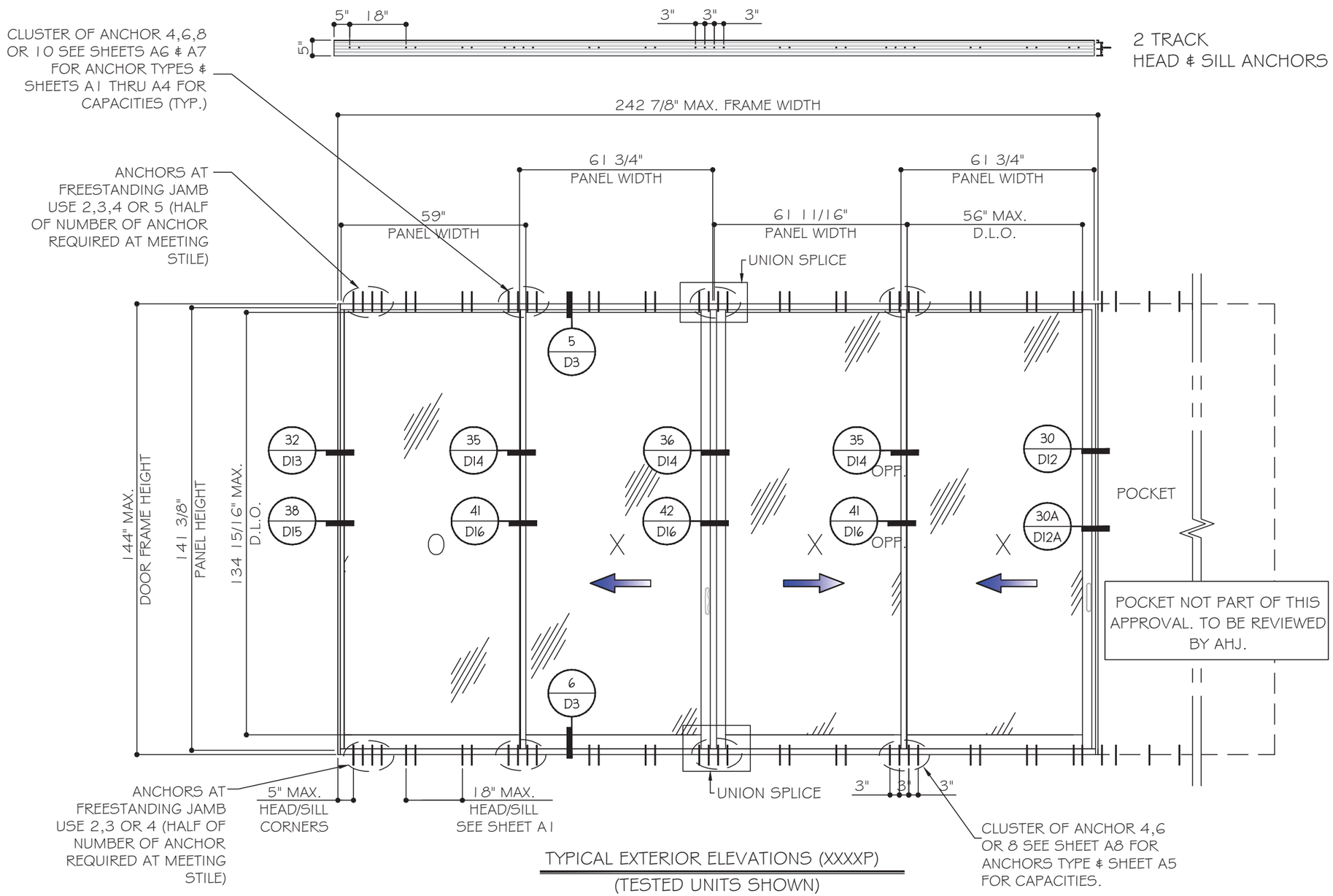

TYPICAL EXTERIOR ELEVATIONS (XXXXP)

(TESTED UNITS SHOWN)

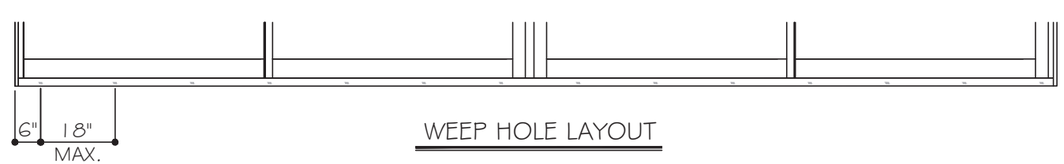

WEEP HOLE LAYOUT

NOMINAL PANEL WIDTH = FRAME WIDTH / NO. OF PANEL
PANEL HEIGHT = FRAME HEIGHT - 2.625"
D.L.O. HEIGHT = DOOR FRAME HEIGHT - 9.125"
D.L.O. WIDTH = NOMINAL PANEL WIDTH - 4"

YIJING WANG P.E.
FLORIDA REGISTRATION
PE #55983
C.A.N. 28577
STATE OF FLORIDA PROFESSIONAL ENGINEER
October 23rd, 2024

MCY ENGINEERING, INC.
GLAZING CONSULTANTS
12781 MIRAMAR PARKWAY #301
MIRAMAR, FL. 33027
P: 305.271.0117
www.MCYEngineering.com mcy@mcyengineering.com

ES-SGD2020 SLIDING GLASS DOOR (LMI & SMI)

ES WINDOWS, INC.
10653 NE Quayibridge Ct.
Miami, FL 33138
TEL. (305) 624-7775

Rev. No.	Date	Drawn By	Description
R5	10.08.2024	James	REVISION

Drawn Date 10.08.2024

Scale

DRAWING NO.
AD16-29

E3

Sheet No.
04 OF 59

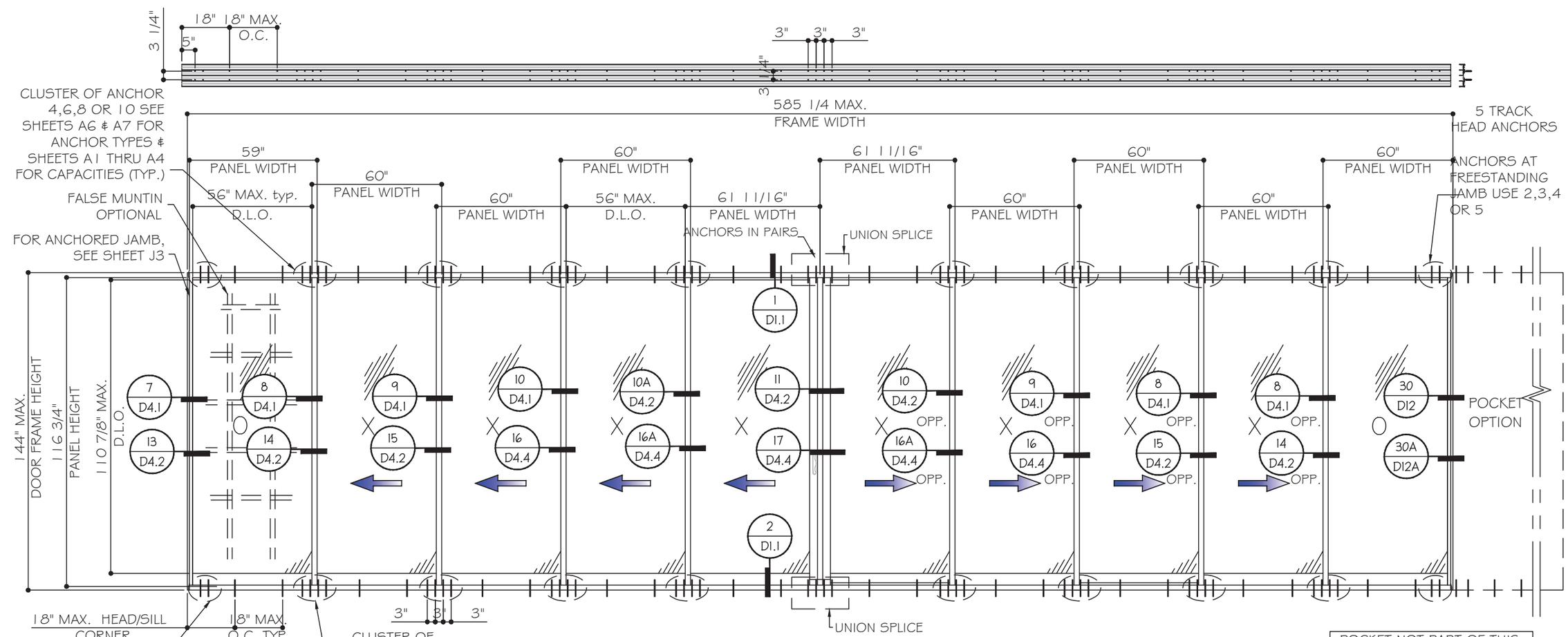

TYPICAL EXTERIOR ELEVATIONS (OXXXXXXXP)

(TESTED UNITS SHOWN)

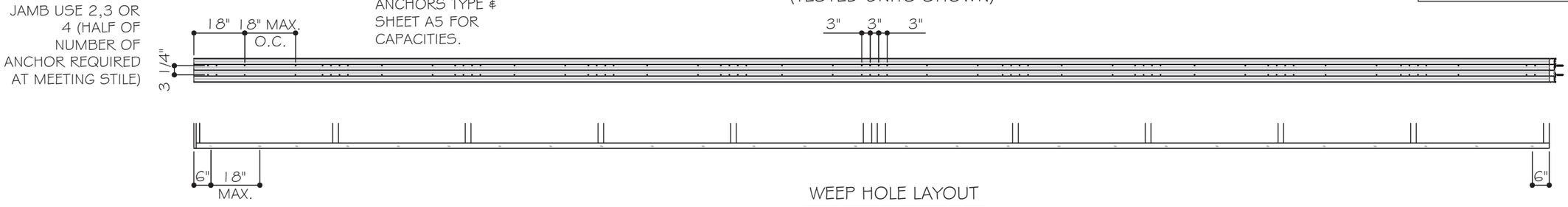

WEEP HOLE LAYOUT

NOMINAL PANEL WIDTH = FRAME WIDTH / NO. OF PANEL
PANEL HEIGHT = FRAME HEIGHT - 2.625"
D.L.O. HEIGHT = DOOR FRAME HEIGHT - 9.125"
D.L.O. WIDTH = NOMINAL PANEL WIDTH - 4"

FOR INTERLOCK CAPACITY SEE CHARTS SHEET K1

YIJING WANG, P.E.
FLORIDA REGISTRATION
PE #55983
C.A.N. 28577
STATE OF FLORIDA PROFESSIONAL ENGINEER
October 23rd, 2024

MCY ENGINEERING, INC.
GLAZING CONSULTANTS
12781 MIRAMAR PARKWAY #301
MIRAMAR, FL. 33027
P: 305.271.0117
www.MCYEngineering.com mcy@mcyengineering.com

ES-SGD2020 SLIDING GLASS DOOR (LMI & SMI)

ES WINDOWS, INC.
10653 NE Quaybridge Ct.
Miami, FL 33138
TEL. (305) 624-7775

Rev. No.	Date	Drawn By	Description
R5	10.08.2024	James	REVISION

Drawn Date 10.08.2024

Scale

DRAWING NO. AD16–29

E4

Sheet No. 05 OF 59

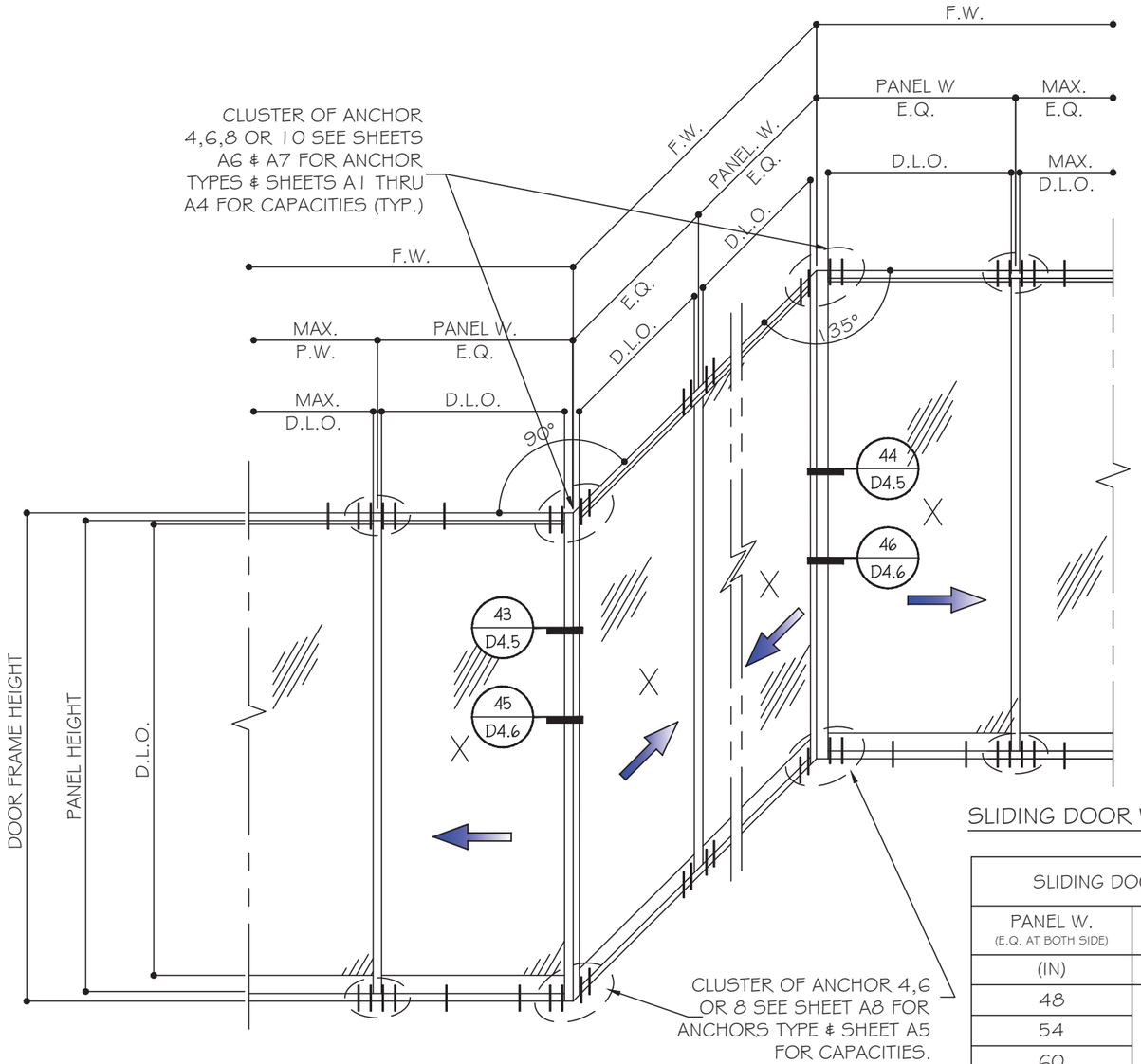

CORNER MULLIONS

NOTE: CAPACITY FOR SGD WITH EQ WIDTH(W) AND EQUAL LOAD AT BOTH SIDES. FOR UNEQUAL CONDITIONS TO BE CHECKED SEPARATELY.

SLIDING DOOR WITH 90° & 135° TURN

SLIDING DOOR WITH CORNER STILES			
PANEL W. (E.Q. AT BOTH SIDE)	F.H.	ALLOW. DESIGN LOAD	
(IN)	(IN)	(+) PSF	(-) PSF
48	120	90	102
54		88.3	100.1
60		79.5	90.1
42	126	90	102
48		85.8	97.3
54		76.3	86.5
42	132	85.3	96.7
48		74.7	84.6
54		66.4	75.2
36	138	87.1	98.7
42		74.7	84.6
48		65.3	74.1
36	144	76.7	86.9
42		65.7	74.5
48		57.5	65.2

CORNER MULLION

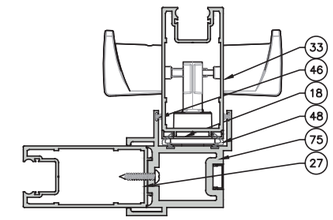

MULLION FOR LAMINATED GLASS

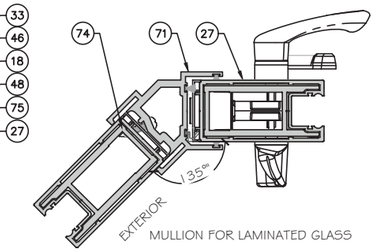

MULLION FOR LAMINATED GLASS

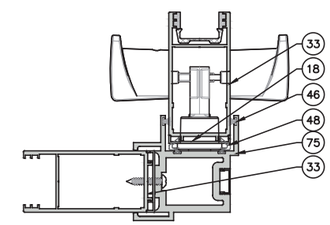

MULLION FOR INSULATED LAMINATED GLASS

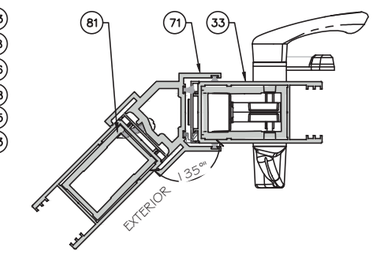

MULLION FOR INSULATED LAMINATED GLASS

LOCKSTILE OPTIONS

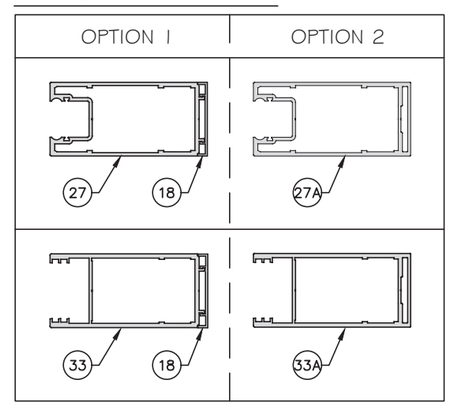

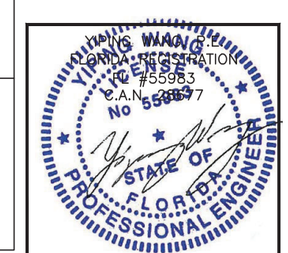

October 23rd, 2024

MCY ENGINEERING, INC.
GLAZING CONSULTANTS
12781 MIRAMAR PARKWAY #301
MIRAMAR, FL. 33027 P: 305.271.0117
www.MCYEngineering.com mcy@mcyengineering.com

ES-SGD2020 SLIDING GLASS DOOR (LMI & SMI)

ES WINDOWS, INC.
10653 NE Quayibridge Ct.
Miami, FL 33138
TEL. (305) 624-7775

Rev. No.	Date	Drawn By	Description
R5	10.08.2024	James	REVISION

Drawn Date 10.08.2024

Scale

DRAWING NO.
AD16–29

E5

Sheet No.
06 OF 59

APPROVED CONFIGURATION DOORS

(NON-REINFORCED SHOWN)

SEE SHEET K1 FOR Dp AND REINFORCING OPTIONS

LAMINATED GLASS OPTIONS SHOWN.
SEE DETAILS FOR INSULATED LAMINATED OPTION.

NON-REINFORCED DETAILS SHOWN.
FOR REINFORCED DETAILS, SEE SHEET D4 TO D7 FOR (4 TRACKS), D8 TO D12 FOR (3 TRACKS), D13 TO D16 FOR (2 TRACKS).

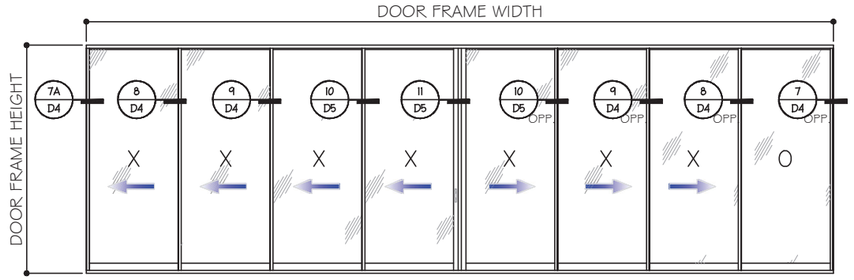

XXXXXXXO (SHOWN)
OXXXXXXX

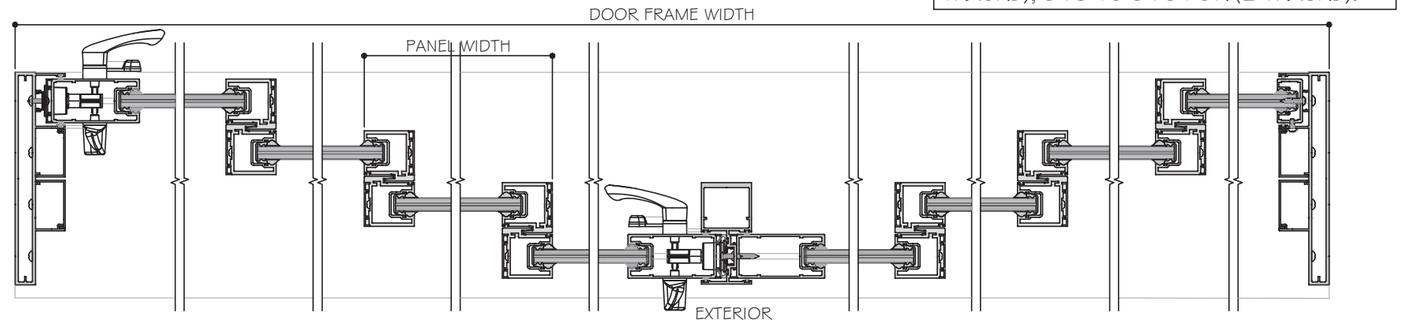

7A D4 DETAIL OPP. | 8 D4 DETAIL | 9 D4 DETAIL | 10 D5 DETAIL | 11 D5 DETAIL | 10 D5 DETAIL OPP. | 9 D4 DETAIL OPP. | 8 D4 DETAIL OPP. | 7 D4 DETAIL OPP.

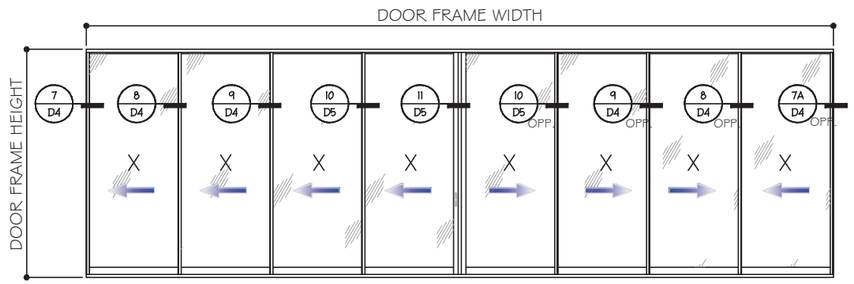

XXXXXXXX (SHOWN)
OXXXXXXO

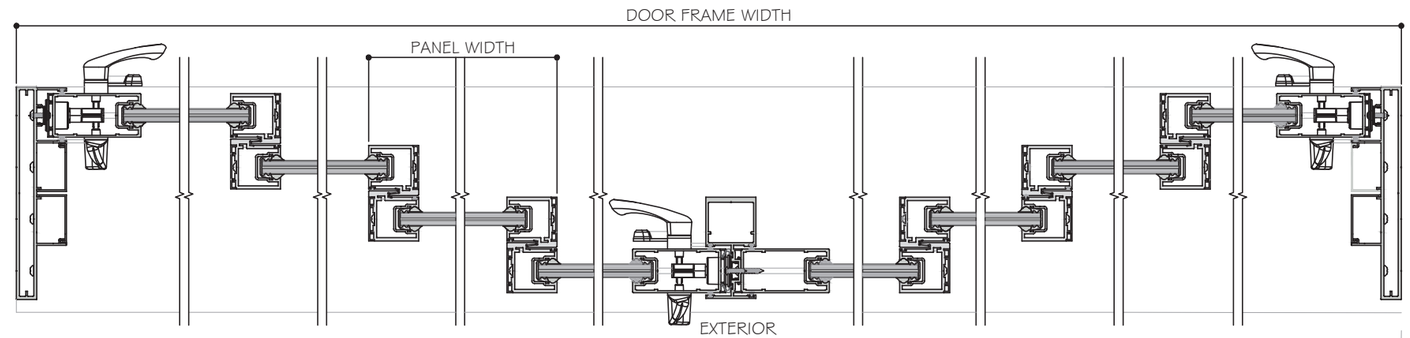

7A D4 DETAIL OPP. | 8 D4 DETAIL | 9 D4 DETAIL | 10 D5 DETAIL | 11 D5 DETAIL | 10 D5 DETAIL OPP. | 9 D4 DETAIL OPP. | 8 D4 DETAIL OPP. | 7A D4 DETAIL

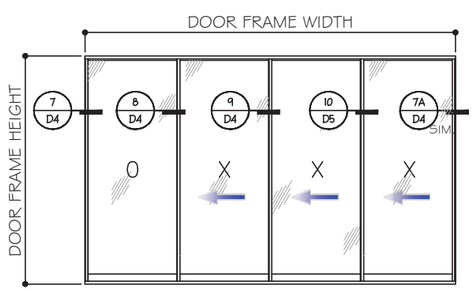

OXXX (SHOWN)
XXXO
XXXX

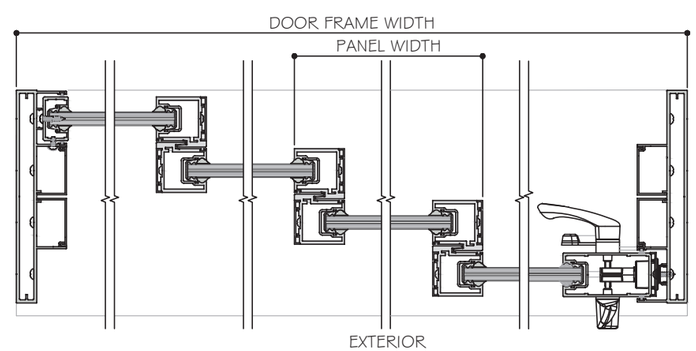

7 D4 DETAIL | 8 D4 DETAIL | 9 D4 DETAIL | 10 D5 DETAIL | 7A D4 DETAIL SIM.

FOUR (4) TRACKS

NOTES:

1. CONFIGURATIONS SHOWN FOR ILLUSTRATION PURPOSES ONLY.
2. SEE CHART ON SHEET G1 FOR GLASS CAPACITIES AND GLASS OPTIONS.
3. FOR APPLICABLE DESIGN PRESSURES SGD REINFORCING LEVEL 1, 2 OR 3, SEE SHEET K1.
4. FOR ANCHOR DETAILS AND CAPACITIES AT HEAD/SILL SEE SHEET A1 TO A8.
5. FREE STANDING JAMB SEE OPTIONS AND CAPACITIES ON SHEET J1 TO J4.
6. DOOR SHALL MEET EGRESS REQUIREMENTS AS APPLICABLE PER FBC.

YIPING WANG P.E.
FLORIDA REGISTRATION
No #55983
C.A.N. 28677
STATE OF FLORIDA PROFESSIONAL ENGINEER
October 23rd, 2024

MCY ENGINEERING, INC.
GLAZING CONSULTANTS
12781 MIRAMAR PARKWAY #301
MIRAMAR, FL. 33027 P: 305.271.0117
www.MCYEngineering.com mcy@mcyengineering.com

ES-SGD2020 SLIDING GLASS DOOR (LMI & SMI)

ES WINDOWS, INC.
10653 NE Quayibridge Ct.
Miami, FL 33138
TEL. (305) 624-7775

Rev. No.	Date	Drawn By	REVISION	Description
RJS	10.08.2024	James		

Drawn Date 10.08.2024 | Scale

DRAWING NO. AD16–29

E6

Sheet No. 07 OF 59

APPROVED CONFIGURATION POCKETED DOORS

(NON-REINFORCED SHOWN)

SEE SHEET K1 FOR Dp AND REINFORCING OPTIONS

LAMINATED GLASS OPTIONS SHOWN.
SEE DETAILS FOR INSULATED LAMINATED OPTION.

NON-REINFORCED DETAILS SHOWN.
FOR REINFORCED DETAILS, SEE SHEET D4 TO D7 FOR (4 TRACKS), D8 TO D12 FOR (3 TRACKS), D13 TO D16 FOR (2 TRACKS).

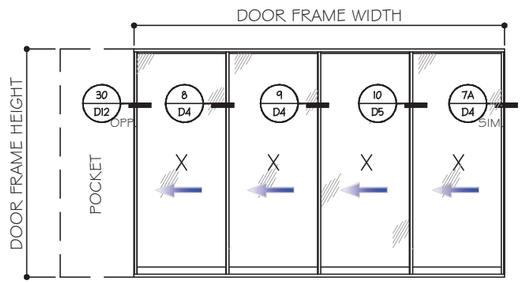

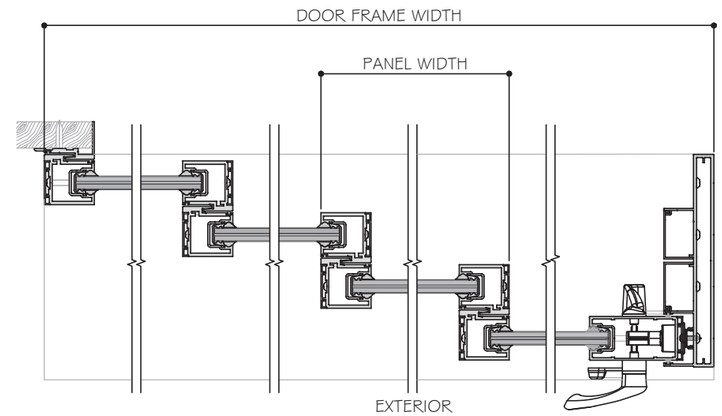

30 D12 DETAIL OPP. | 8 D4 DETAIL | 9 D4 DETAIL | 10 D5 DETAIL | 7A D4 DETAIL SIM.

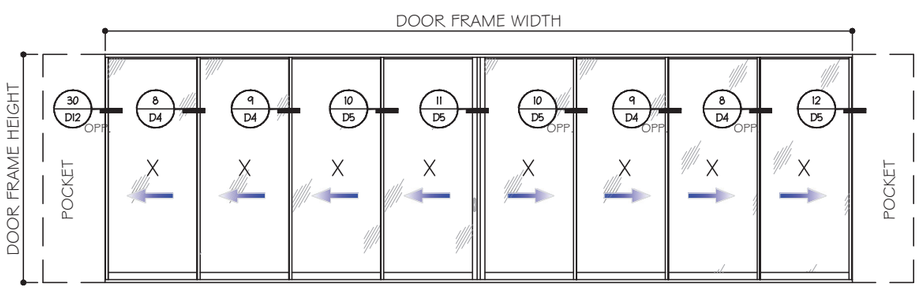

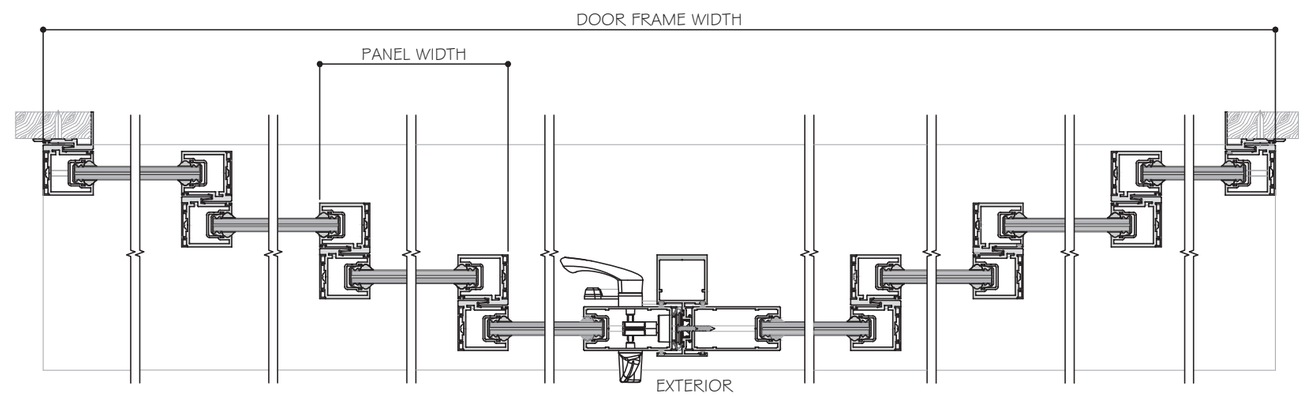

30 D12 DETAIL OPP. | 8 D4 DETAIL | 9 D4 DETAIL | 10 D5 DETAIL | 11 D5 DETAIL | 10 D5 DETAIL OPP. | 9 D4 DETAIL OPP. | 8 D4 DETAIL OPP. | 12 D5 DETAIL

FOUR (4) TRACKS

POCKETS ARE NOT PART OF THIS APPROVAL AND ARE TO BE REVIEWED BY AHJ.

NOTES:

1. CONFIGURATIONS SHOWN FOR ILLUSTRATION PURPOSES ONLY.
2. SEE CHART ON SHEET G1 FOR GLASS CAPACITIES AND GLASS OPTIONS.
3. FOR APPLICABLE DESIGN PRESSURES SGD REINFORCING LEVEL 1, 2 OR 3, SEE SHEET K1.
4. FOR ANCHOR DETAILS AND CAPACITIES AT HEAD/SILL SEE SHEET A1 TO A8.
5. FREE STANDING JAMB SEE OPTIONS AND CAPACITIES ON SHEET J1 TO J4.
6. DOOR SHALL MEET EGRESS REQUIREMENTS AS APPLICABLE PER FBC.

YIJING WANG P.E.
FLORIDA REGISTRATION
LICENSE
No 55983
C.A.N. 28677
STATE OF FLORIDA
PROFESSIONAL ENGINEER
October 23rd, 2024

MCY ENGINEERING, INC.
GLAZING CONSULTANTS
12781 MIRAMAR PARKWAY #301
MIRAMAR, FL. 33027
P: 305.271.0117
www.MCYEngineering.com
mcy@mcyengineering.com

ES-SGD2020 SLIDING GLASS DOOR (LMI & SMI)

ES WINDOWS, INC.
10653 NE Quaybridge Ct.
Miami, FL 33138
TEL. (305) 624-7775

Rev. No.	Date	Drawn By	Description
R5	10.08.2024	James	REVISION

Drawn Date: 10.08.2024
Scale:

DRAWING NO. AD16-29

E7

Sheet No. 08 OF 59

APPROVED CONFIGURATION POCKETED DOORS

(NON-REINFORCED SHOWN)

SEE SHEET K1 FOR Dp AND REINFORCING OPTIONS

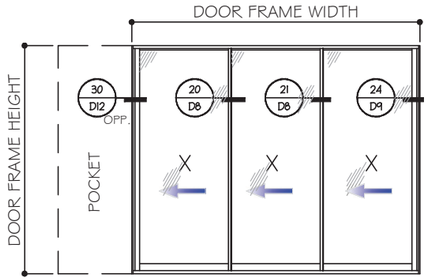

PXXX (SHOWN)
XXXP

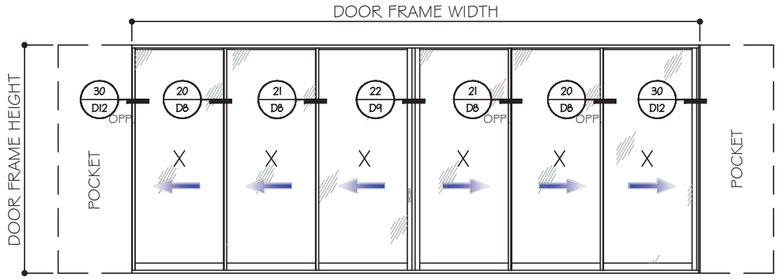

PXXXXXXP (SHOWN)

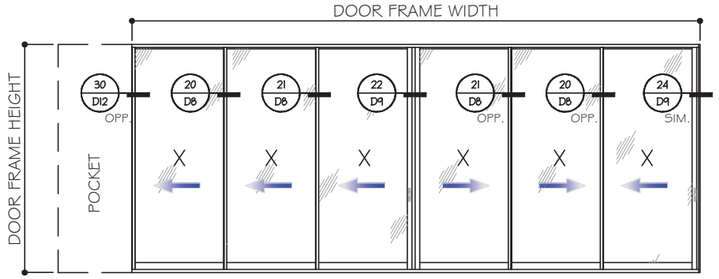

PXXXXXX (SHOWN)
XXXXXXP

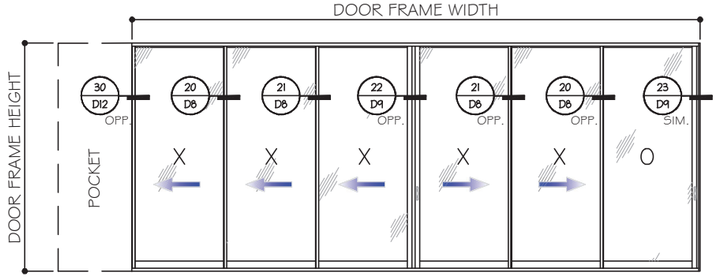

PXXXXXO (SHOWN)
OXXXXXP

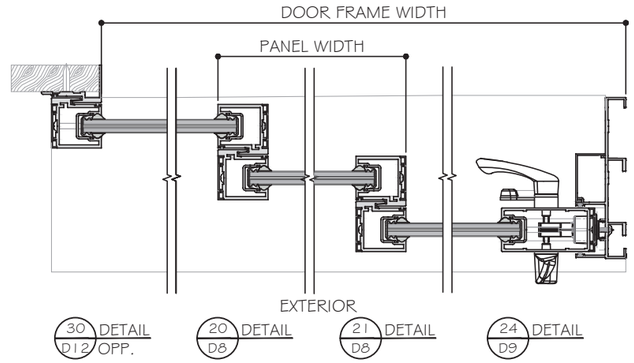

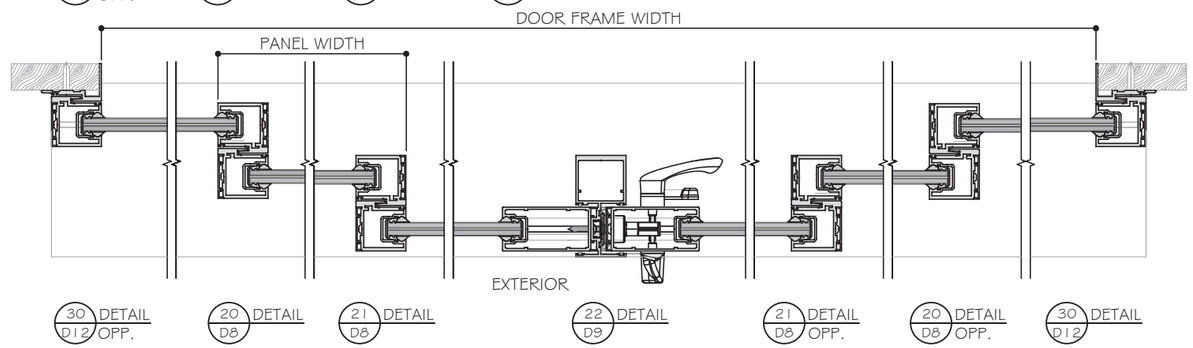

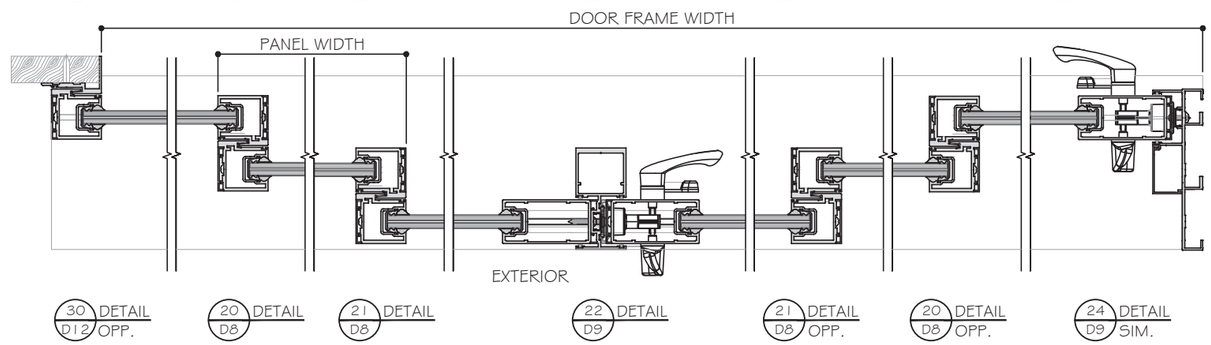

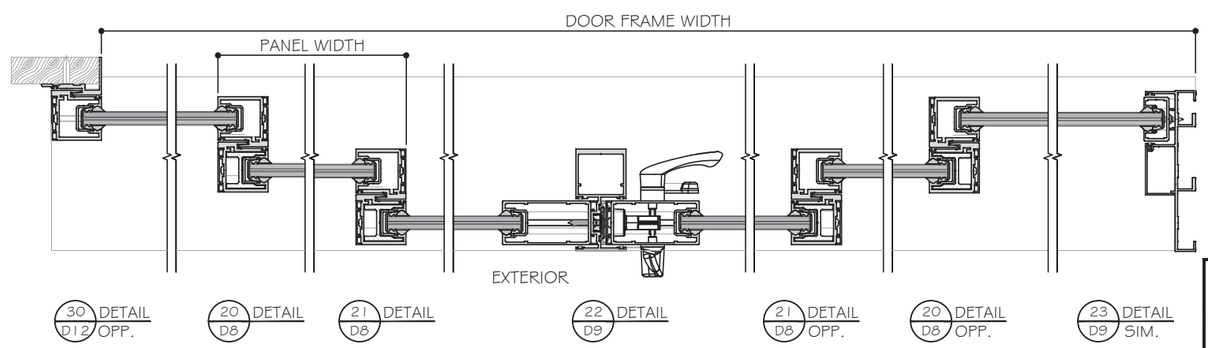

NON-REINFORCED DETAILS SHOWN.
FOR REINFORCED DETAILS, SEE SHEET D4 TO D7 FOR (4 TRACKS), D8 TO D12 FOR (3 TRACKS), D13 TO D16 FOR (2 TRACKS).

LAMINATED GLASS OPTIONS SHOWN.
SEE DETAILS FOR INSULATED LAMINATED OPTION.

THREE (3) TRACKS

POCKETS ARE NOT PART OF THIS APPROVAL AND ARE TO BE REVIEWED BY AHJ.

NOTES:

1. CONFIGURATIONS SHOWN FOR ILLUSTRATION PURPOSES ONLY.
2. SEE CHART ON SHEET G1 FOR GLASS CAPACITIES AND GLASS OPTIONS.
3. FOR APPLICABLE DESIGN PRESSURES SGD REINFORCING LEVEL 1, 2 OR 3, SEE SHEET K1.
4. FOR ANCHOR DETAILS AND CAPACITIES AT HEAD/SILL SEE SHEET A1 TO A8.
5. FREE STANDING JAMB SEE OPTIONS AND CAPACITIES ON SHEET J1 TO J4.
6. DOOR SHALL MEET EGRESS REQUIREMENTS AS APPLICABLE PER FBC.

YIMING WANG
LICENSE
FLORIDA REGISTRATION
PE #55983
C.A.N. 28677
No 55983
STATE OF FLORIDA
PROFESSIONAL ENGINEER
October 23rd, 2024

MCY ENGINEERING, INC.
GLAZING CONSULTANTS
12781 MIRAMAR PARKWAY #301
MIRAMAR, FL. 33027
P: 305.271.0117
www.MCYEngineering.com mcy@mcyengineering.com

ES-SGD2020 SLIDING GLASS DOOR (LMI & SMI)

ES WINDOWS, INC.
10653 NE Quaybridge Ct.
Miami, FL 33138
TEL. (305) 624-7775

Rev. No.	Date	Drawn By	Description
R5	10.08.2024	James	REVISION

Drawn Date 10.08.2024

Scale

DRAWING NO. AD16–29

E8

Sheet No. 09 OF 59

APPROVED CONFIGURATION DOORS

(NON-REINFORCED SHOWN)
SEE SHEET K1 FOR Dp AND REINFORCING OPTIONS

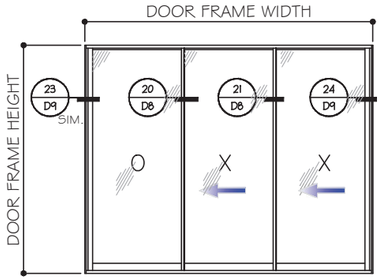

OXX (SHOWN)
XXO
XXX (& REVERSE)

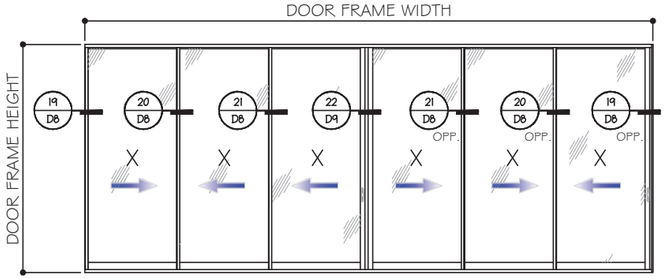

XXXXXX (SHOWN)
OXXXXO

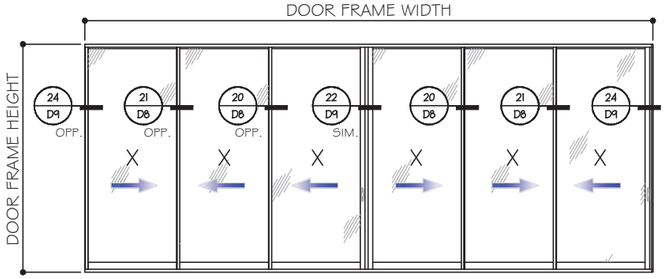

XXXXXX (SHOWN)

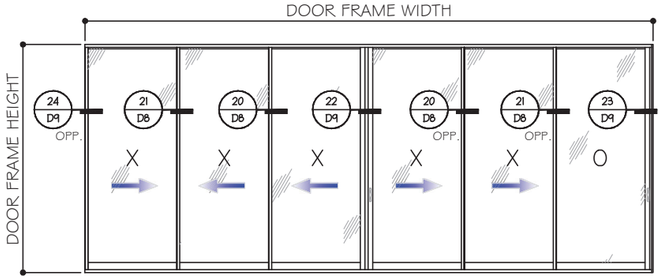

XXXXXO (SHOWN)
OXXXXO

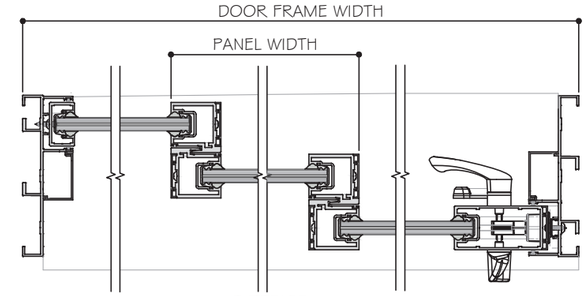

23 D9 DETAIL SIM. | 20 D8 DETAIL | 21 D8 DETAIL | 24 D9 DETAIL

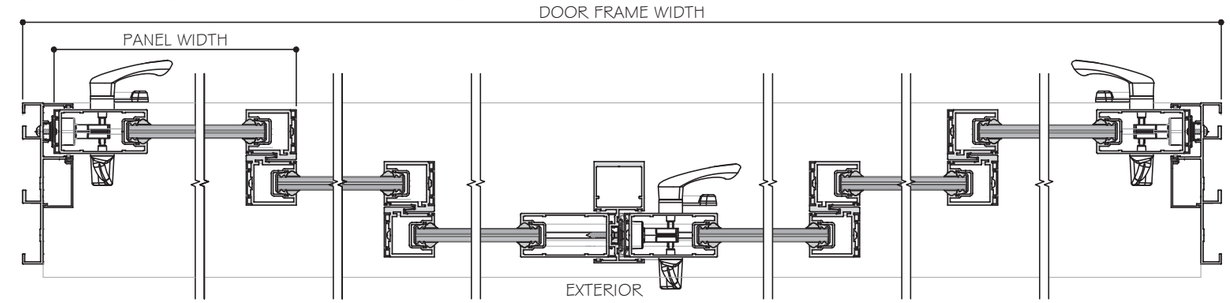

19 D8 DETAIL | 20 D8 DETAIL | 21 D8 DETAIL | 22 D9 DETAIL | 21 D8 DETAIL OPP. | 20 D8 DETAIL OPP. | 19 D8 DETAIL OPP.

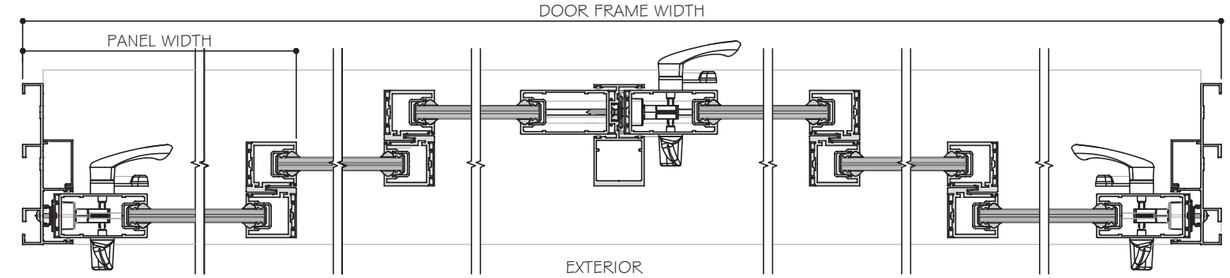

24 D9 DETAIL OPP. | 21 D8 DETAIL OPP. | 20 D8 DETAIL OPP. | 22 D9 DETAIL SIM. | 20 D8 DETAIL | 21 D8 DETAIL | 24 D9 DETAIL

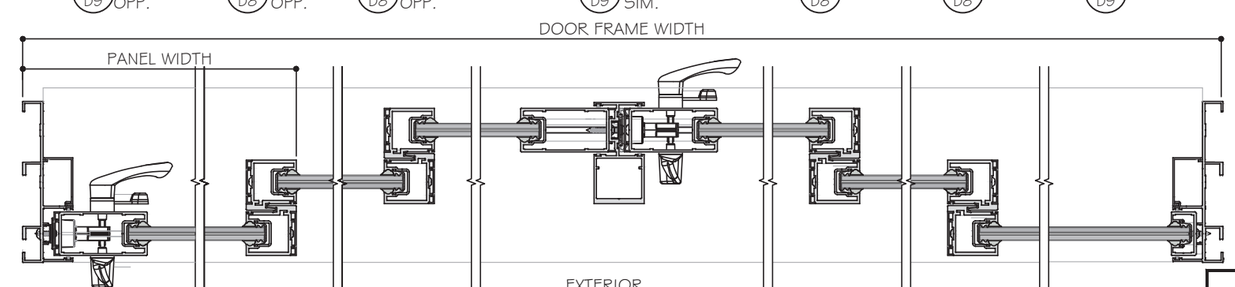

24 D9 DETAIL OPP. | 21 D8 DETAIL OPP. | 20 D8 DETAIL OPP. | 22 D9 DETAIL SIM. | 20 D8 DETAIL | 21 D8 DETAIL | 23 D9 DETAIL

NON-REINFORCED DETAILS SHOWN.
FOR REINFORCED DETAILS, SEE SHEET D4 TO D7 FOR (4 TRACKS), D8 TO D12 FOR (3 TRACKS), D13 TO D16 FOR (2 TRACKS).

LAMINATED GLASS OPTIONS SHOWN.
SEE DETAILS FOR INSULATED LAMINATED OPTION.

THREE (3) TRACKS

POCKETS ARE NOT PART OF THIS APPROVAL AND ARE TO BE REVIEWED BY AHJ.

NOTES:

1. CONFIGURATIONS SHOWN FOR ILLUSTRATION PURPOSES ONLY.
2. SEE CHART ON SHEET G1 FOR GLASS CAPACITIES AND GLASS OPTIONS.
3. FOR APPLICABLE DESIGN PRESSURES SGD REINFORCING LEVEL 1, 2 OR 3, SEE SHEET K1.
4. FOR ANCHOR DETAILS AND CAPACITIES AT HEAD/SILL SEE SHEET A1 TO A8.
5. FREE STANDING JAMB SEE OPTIONS AND CAPACITIES ON SHEET J1 TO J4.
6. DOOR SHALL MEET EGRESS REQUIREMENTS AS APPLICABLE PER FBC.

YIMING WANG
LICENSE
FLORIDA REGISTRATION
No 55983
C.A.N. 28677
STATE OF FLORIDA
PROFESSIONAL ENGINEER
October 23rd, 2024

MCY ENGINEERING, INC.
GLAZING CONSULTANTS
12781 MIRAMAR PARKWAY #301
MIRAMAR, FL. 33027
P: 305.271.0117
www.MCYEngineering.com mcy@mcyengineering.com

ES-SGD2020 SLIDING GLASS DOOR (LMI & SMI)

ES WINDOWS, INC.
10653 NE Quaybridge Ct.
Miami, FL 33138
TEL. (305) 624-7775

Rev. No.	Date	Drawn By	Description
R5	10.08.2024	James	REVISION

Drawn Date 10.08.2024
Scale

DRAWING NO.
AD16-29

E9

Sheet No.
10 OF 59

APPROVED CONFIGURATION DOORS

(NON-REINFORCED SHOWN)
SEE SHEET K1 FOR Dp AND REINFORCING OPTIONS

LAMINATED GLASS OPTIONS SHOWN.
SEE DETAILS FOR INSULATED LAMINATED OPTION.

NON-REINFORCED DETAILS SHOWN.
FOR REINFORCED DETAILS, SEE SHEET D4 TO D7 FOR (4 TRACKS), D8 TO D12 FOR (3 TRACKS), D13 TO D16 FOR (2 TRACKS).

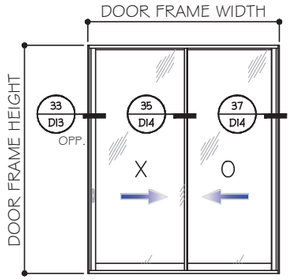

XO (SHOWN)
OX

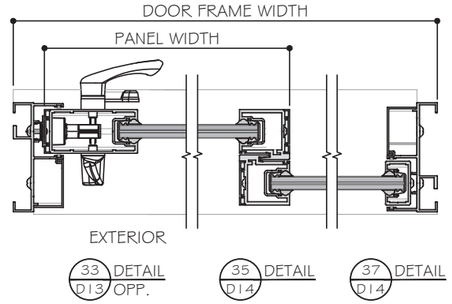

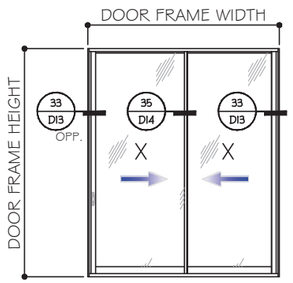

XX

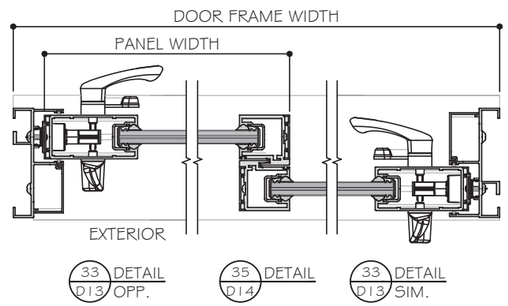

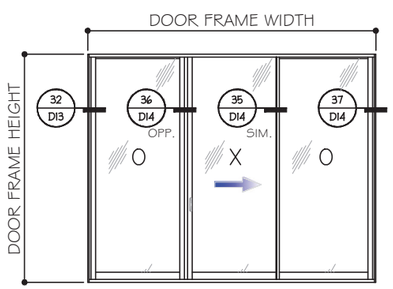

OXO (SHOWN)
OXO (REVERSE)

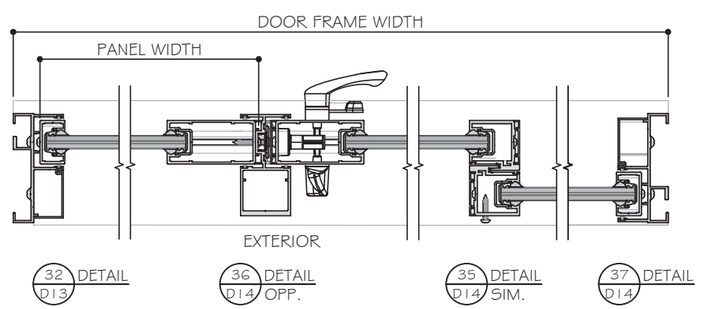

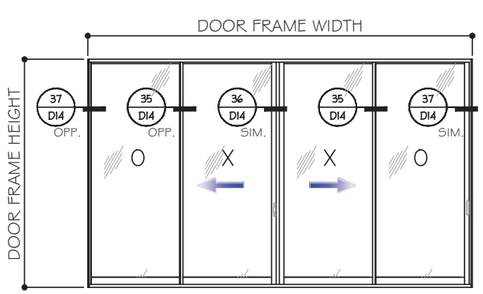

OXXO (SHOWN)
XXXX (SIMILAR)

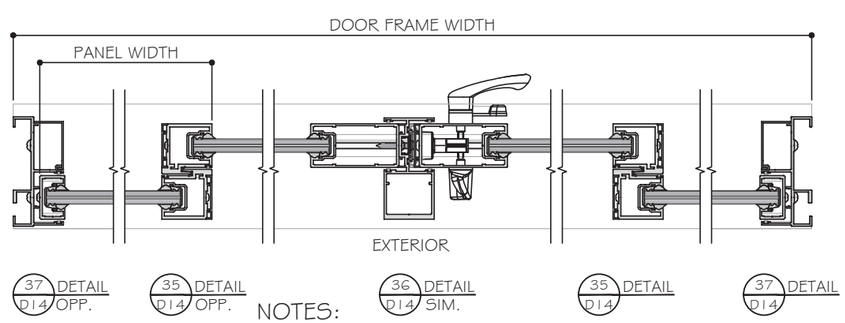

TWO (2) TRACKS

POCKETS ARE NOT PART OF THIS APPROVAL
AND ARE TO BE REVIEWED BY AHJ.

NOTES:

1. CONFIGURATIONS SHOWN FOR ILLUSTRATION PURPOSES ONLY.
2. SEE CHART ON SHEET G1 FOR GLASS CAPACITIES AND GLASS OPTIONS.
3. FOR APPLICABLE DESIGN PRESSURES SGD REINFORCING LEVEL 1, 2 OR 3, SEE SHEET K1.
4. FOR ANCHOR DETAILS AND CAPACITIES AT HEAD/SILL SEE SHEET A1 TO A8.
5. FREE STANDING JAMB SEE OPTIONS AND CAPACITIES ON SHEET J1 TO J4.
6. DOOR SHALL MEET EGRESS REQUIREMENTS AS APPLICABLE PER FBC.

YIJING WANG
FLORIDA REGISTRATION
PE #55983
C.A.N. 28677
No 55983
STATE OF FLORIDA
PROFESSIONAL ENGINEER
October 23rd, 2024

MCY ENGINEERING, INC.
GLAZING CONSULTANTS
12781 MIRAMAR PARKWAY #301
MIRAMAR, FL. 33027
P: 305.271.0117
www.MCYEngineering.com
mcy@mcyengineering.com

ES-SGD2020 SLIDING GLASS DOOR (LMI & SMI)

ES WINDOWS, INC.
10653 NE Quaybridge Ct.
Miami, FL 33138
TEL. (305) 624-7775

Rev. No.	Date	Drawn By	Description
R5	10.08.2024	James	REVISION

Drawn Date 10.08.2024
Scale

DRAWING NO.
AD16–29

E10

Sheet No.
11 OF 59

APPROVED CONFIGURATION POCKETED DOORS

(NON-REINFORCED SHOWN)

SEE SHEET K1 FOR Dp AND REINFORCING OPTIONS

LAMINATED GLASS OPTIONS SHOWN.
SEE DETAILS FOR INSULATED LAMINATED OPTION.

NON-REINFORCED DETAILS SHOWN.
FOR REINFORCED DETAILS, SEE SHEET D4 TO D7 FOR (4 TRACKS), D8 TO D12 FOR (3 TRACKS), D13 TO D16 FOR (2 TRACKS).

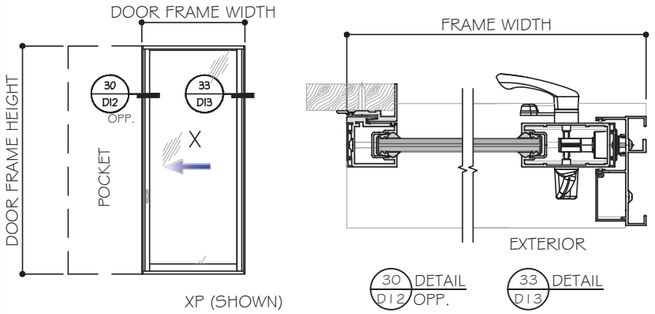

XP (SHOWN)
PX (REVERSE)

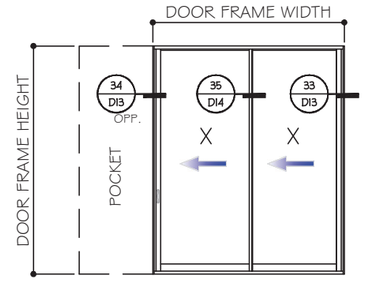

PXX (SHOWN)
XXP (REVERSE)

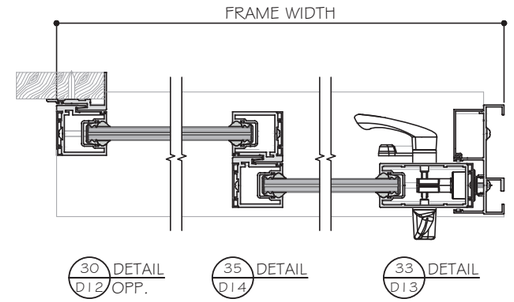

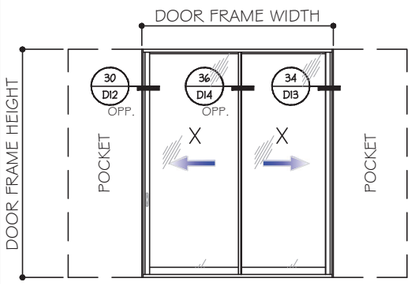

PXXP

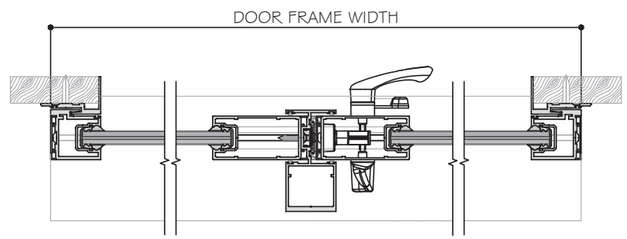

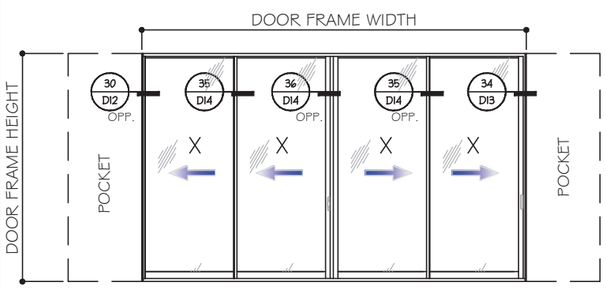

PXXXXP

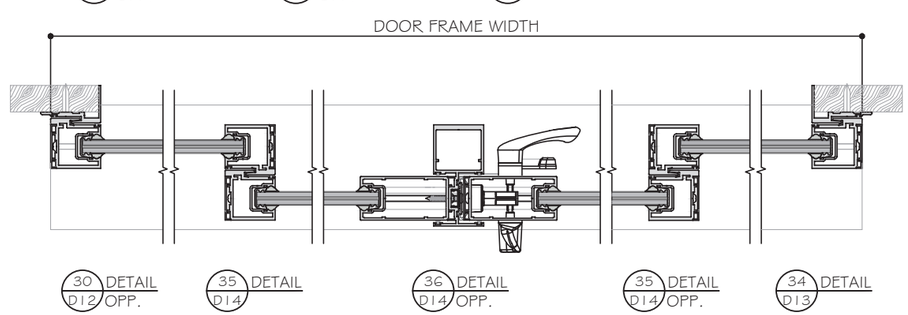

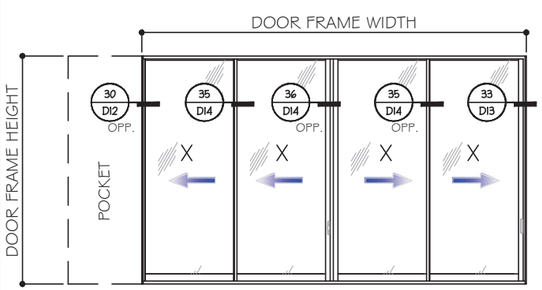

PXXXX (SHOWN)
XXXXP (REVERSE)
PXXXO
OXXXP

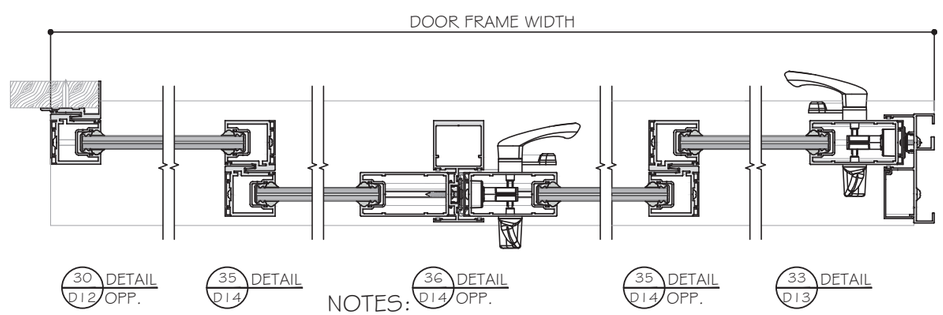

TWO (2) TRACKS

POCKETS ARE NOT PART OF THIS APPROVAL AND ARE TO BE REVIEWED BY AHJ.

NOTES:

1. CONFIGURATIONS SHOWN FOR ILLUSTRATION PURPOSES ONLY.
2. SEE CHART ON SHEET G1 FOR GLASS CAPACITIES AND GLASS OPTIONS.
3. FOR APPLICABLE DESIGN PRESSURES SGD REINFORCING LEVEL 1, 2 OR 3, SEE SHEET K1.
4. FOR ANCHOR DETAILS AND CAPACITIES AT HEAD/SILL SEE SHEET A1 TO A8.
5. FREE STANDING JAMB SEE OPTIONS AND CAPACITIES ON SHEET J1 TO J4.
6. DOOR SHALL MEET EGRESS REQUIREMENTS AS APPLICABLE PER FBC.

YIJING WANG P.E.
FLORIDA REGISTRATION
LICENSE
No 55983
C.A.N. 28677
STATE OF FLORIDA
PROFESSIONAL ENGINEER
October 23rd, 2024

MCY ENGINEERING, INC.
GLAZING CONSULTANTS
12781 MIRAMAR PARKWAY #301
MIRAMAR, FL. 33027
P: 305.271.0117
www.MCYEngineering.com mcy@mcyengineering.com

ES-SGD2020 SLIDING GLASS DOOR (LMI & SMI)

ES WINDOWS, INC.
10653 NE Quaybridge Ct.
Miami, FL 33138
TEL. (305) 624-7775

Rev. No.	Date	Drawn By	Description
R5	10.08.2024	James	REVISION

Drawn Date 10.08.2024

Scale

DRAWING NO. AD16–29

E11

Sheet No. 12 OF 59

APPROVED CONFIGURATION POCKETED AND NO POCHET DOORS

(NON-REINFORCED SHOWN)

SEE SHEET K1 FOR Dp AND REINFORCING OPTIONS

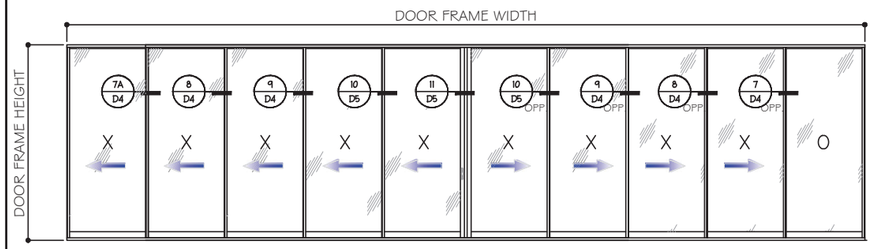

XXXXXXXXO (SHOWN)
OXXXXXXXX

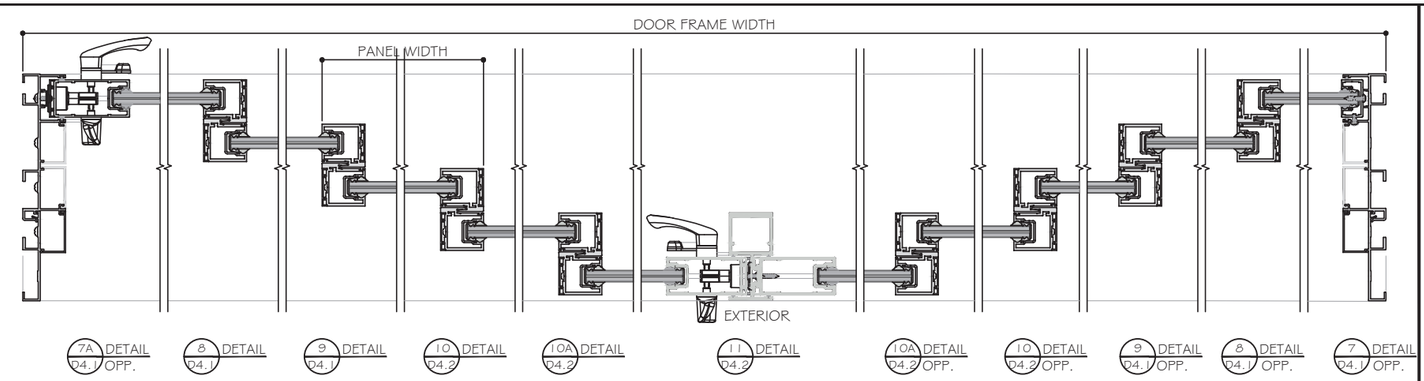

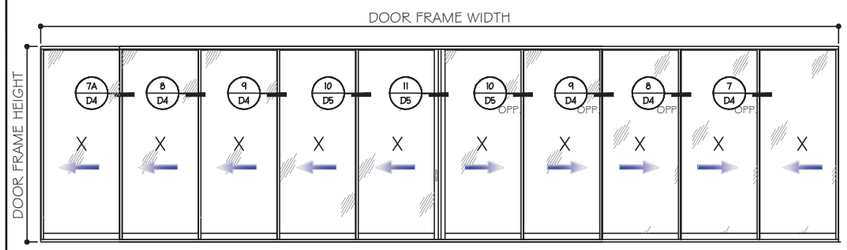

XXXXXXXXO (SHOWN)
OXXXXXXXX

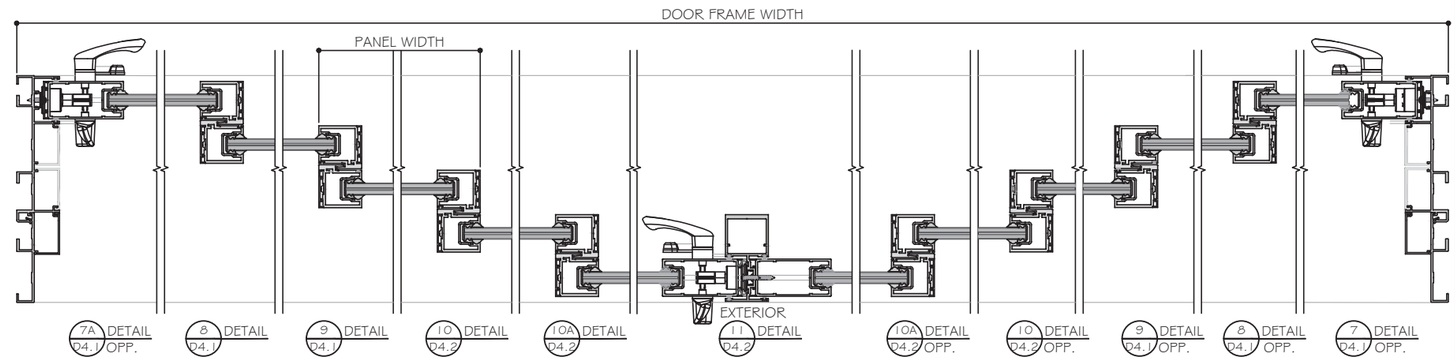

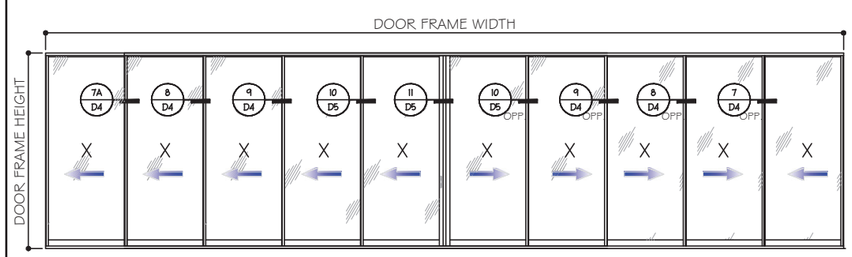

XXXXXXXXO (SHOWN)
OXXXXXXXX

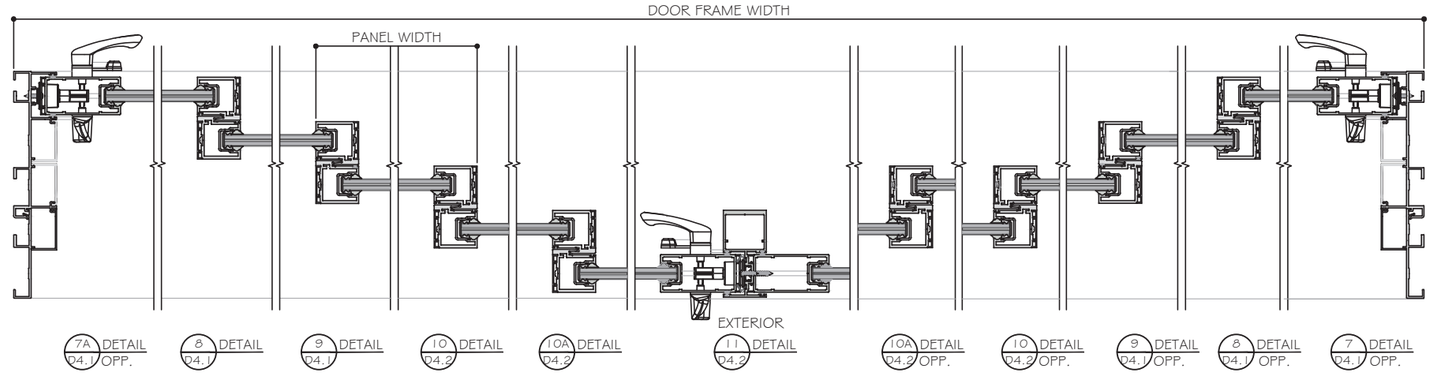

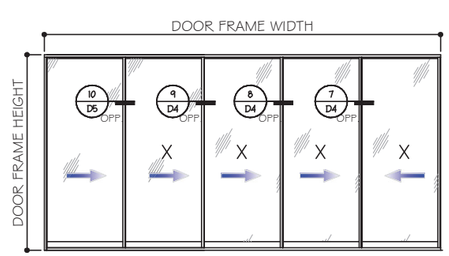

XXXXX (SHOWN)

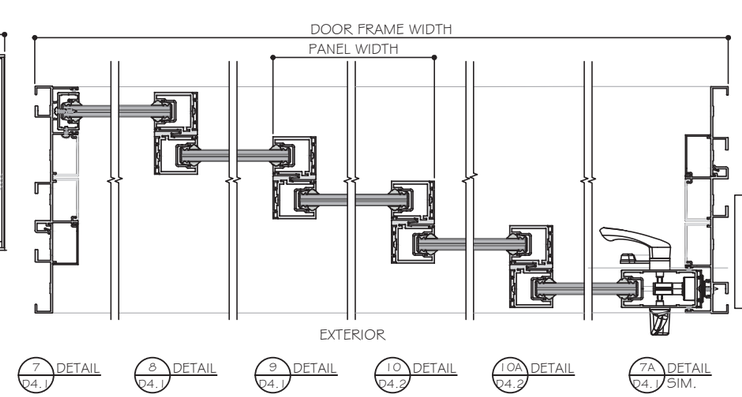

FIVE (5) TRACKS

POCKETS ARE NOT PART OF THIS APPROVAL AND ARE TO BE REVIEWED BY AHJ.

NOTES:

1. CONFIGURATIONS SHOWN FOR ILLUSTRATION PURPOSES ONLY.
2. SEE CHART ON SHEET G1 FOR GLASS CAPACITIES AND GLASS OPTIONS.
3. FOR APPLICABLE DESIGN PRESSURES SGD REINFORCING LEVEL 1, 2 OR 3, SEE SHEET K1.
4. FOR ANCHOR DETAILS AND CAPACITIES AT HEAD/SILL SEE SHEET A1 TO A8.
5. FREE STANDING JAMB SEE OPTIONS AND CAPACITIES ON SHEET J1 TO J4.
6. DOOR SHALL MEET EGRESS REQUIREMENTS AS APPLICABLE PER FBC.

LAMINATED GLASS OPTIONS SHOWN.
SEE DETAILS FOR INSULATED
LAMINATED OPTION.

NON-REINFORCED DETAILS SHOWN.
FOR REINFORCED DETAILS, SEE SHEET D4 TO D7 FOR (4 TRACKS), D8 TO D12 FOR (3 TRACKS), D13 TO D16 FOR (2 TRACKS).

YIANG WANG
FLORIDA REGISTRATION
PE #55983
C.A.N. 28677
STATE OF FLORIDA
PROFESSIONAL ENGINEER
No 55983
October 23rd, 2024

MCY ENGINEERING, INC.
GLAZING CONSULTANTS
12781 MIRAMAR PARKWAY #301
MIRAMAR, FL. 33027
P: 305.271.0117
www.MCYEngineering.com mcy@mcyengineering.com

ES-SGD2020 SLIDING GLASS DOOR (LMI & SMI)

ES WINDOWS, INC.
10653 NE Quaybridge Ct.
Miami, FL 33138
TEL. (305) 624-7775

Rev. No.	Date	Drawn By	Description
R5	10.08.2024	James	REVISION

Drawn Date 10.08.2024

Scale

DRAWING NO. AD16–29

E12

Sheet No. 13 OF 59

DESIGN LOAD CAPACITY - PSF (GLASS)

SGD PANEL SIZES		9/16" NOMINAL LAMINATED GLASS			1-1/8" NOMINAL INSUL. LAMI. GLASS		1-1/8" NOMINAL INSUL. LAMI. GLASS		
AVE. PANEL WIDTH	DOOR HEIGHT	G1	G2	G7	G3	G4	G5	G6	G8
(IN)	(IN)	+/- PSF	+/- PSF	+/- PSF	+/- PSF	+/- PSF	+/- PSF	+/- PSF	+/- PSF
60	84	150.0	150.0	90.0	150.0	150.0	102.0	102.0	90.0
66		150.0	150.0	90.0	150.0	150.0	102.0	102.0	90.0
72		102.0	100.0	90.0	102.0	100.0	102.0	-	90.0
78		102.0	100.0	90.0	102.0	100.0	102.0	-	90.0
84		102.0	100.0	90.0	102.0	100.0	102.0	-	90.0
60	90	150.0	150.0	90.0	150.0	150.0	102.0	102.0	90.0
66		102.0	100.0	90.0	102.0	100.0	102.0	-	90.0
72		102.0	100.0	90.0	102.0	100.0	102.0	-	90.0
78		102.0	100.0	90.0	102.0	100.0	102.0	-	90.0
84		102.0	-	-	102.0	-	-	-	-
60	96	150.0	150.0	90.0	150.0	150.0	102.0	102.0	90.0
66		102.0	100.0	90.0	102.0	100.0	102.0	-	90.0
72		102.0	100.0	90.0	102.0	100.0	102.0	-	90.0
78		102.0	-	-	102.0	-	-	-	-
84		102.0	-	-	102.0	-	-	-	-
36	102	150.0	150.0	90.0	150.0	150.0	102	102	90.0
42		150.0	150.0	90.0	150.0	147.0	102	102	90.0
48		150.0	150.0	90.0	150.0	131.0	102	102	90.0
54		150.0	139.0	90.0	150.0	120.0	102	102	90.0
60		102.0	100.0	90.0	102.0	102.0	102	-	90.0
66		102.0	100.0	90.0	102.0	102.0	102	-	90.0
72		102.0	100.0	90.0	102.0	101.0	-	-	90.0
78		102.0	-	-	102.0	-	-	-	-
84		102.0	-	-	102.0	-	-	-	-
36	108	150.0	150.0	90.0	150.0	150.0	102	102	90.0
42		150.0	150.0	90.0	150.0	136.0	102	102	90.0
48		150.0	147.0	90.0	150.0	122.0	102	102	90.0
54		102.0	102.0	90.0	102.0	102.0	102	-	90.0
60		102.0	102.0	90.0	102.0	102.0	102	-	90.0
66		102.0	102.0	90.0	102.0	101.0	-	-	90.0
72		102.0	-	-	102.0	-	-	-	-
78		102.0	-	-					

D.L.O. WIDTH = AVE. PANEL WIDTH - 4"
D.L.O. HEIGHT = FRAME HEIGHT - 9.125"

DESIGN LOAD CAPACITY - PSF (GLASS)

SGD PANEL SIZES		9/16" NOMINAL LAMINATED GLASS			1-1/8" NOMINAL INSUL. LAMI. GLASS		1-1/8" NOMINAL INSUL. LAMI. GLASS		
AVE. PANEL WIDTH	DOOR HEIGHT	G1	G2	G7	G3	G4	G5	G6	G8
(IN)	(IN)	+/- PSF	+/- PSF	+/- PSF	+/- PSF	+/- PSF	+/- PSF	+/- PSF	+/- PSF
36	114	150.0	150.0	90.0	150.0	150.0	102	102	90.0
42		150.0	150.0	90.0	150.0	132.0	102	102	90.0
48		150.0	150.0	90.0	139.0	115.0	102	102	90.0
54		102.0	102.0	90.0	102.0	102.0	102	-	90.0
60		102.0	102.0	90.0	102.0	98.8	102	-	90.0
66		102.0	-	-	102.0	-	-	-	-
72		102.0	-	-	102.0	-	-	-	-
36	120	150.0	150.0	90.0	150.0	150.0	102	102	90.0
42		150.0	150.0	90.0	150.0	129.0	102	102	90.0
48		150.0	132.0	90.0	148.0	110.0	102	102	90.0
54		102.0	102.0	90.0	102.0	101.0	102	-	90.0
60		102.0	102.0	90.0	102.0	92.8	-	-	90.0
66		102.0	-	-	102.0	-	-	-	-
72		102.0	-	-	102.0	-	-	-	-
36	126	150.0	-	-	150.0	-	102	-	-
42		150.0	-	-	150.0	-	102	-	-
48		102.0	-	-	102.0	-	102	-	-
54		102.0	-	-	102.0	-	102	-	-
60		102.0	-	-	102.0	-	-	-	-
66		102.0	-	-	102.0	-	-	-	-
36	132	150.0	-	-	150.0	-	102	-	-
42		150.0	-	-	150.0	-	102	-	-
48		102.0	-	-	102.0	-	102	-	-
54		102.0	-	-	102.0	-	102	-	-
60		102.0	-	-	102.0	-	-	-	-
66		102.0	-	-	102.0	-	-	-	-
36	138	150.0	-	-	150.0	-	102	-	-
42		150.0	-	-	150.0	-	102	-	-
48		102.0	-	-	102.0	-	102	-	-
54		102.0	-	-	102.0	-	-	-	-
60		102.0	-	-	102.0	-	-	-	-
36	144	150.0	-	-	150.0	-	102	-	-
42		102.0	-	-	102.0	-	102	-	-
48		102.0	-	-	102.0	-	-	-	-
54		102.0	-	-	102.0	-	-	-	-
60		102.0	-	-	102.0	-	-	-	-

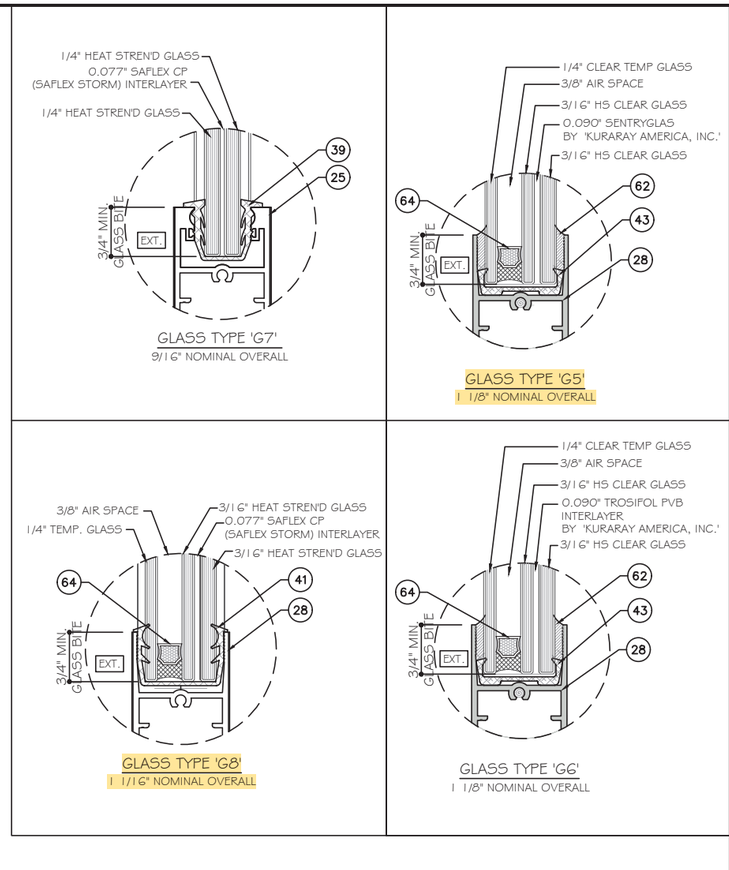

WET GLAZED

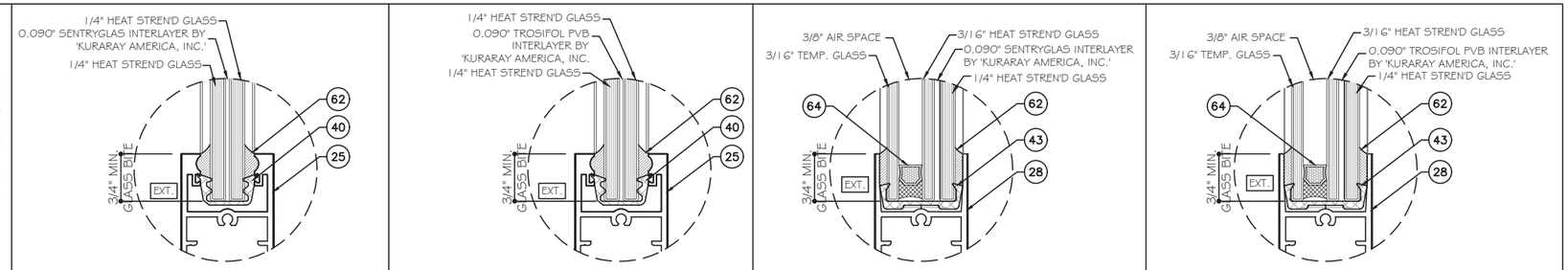

DRY GLAZED

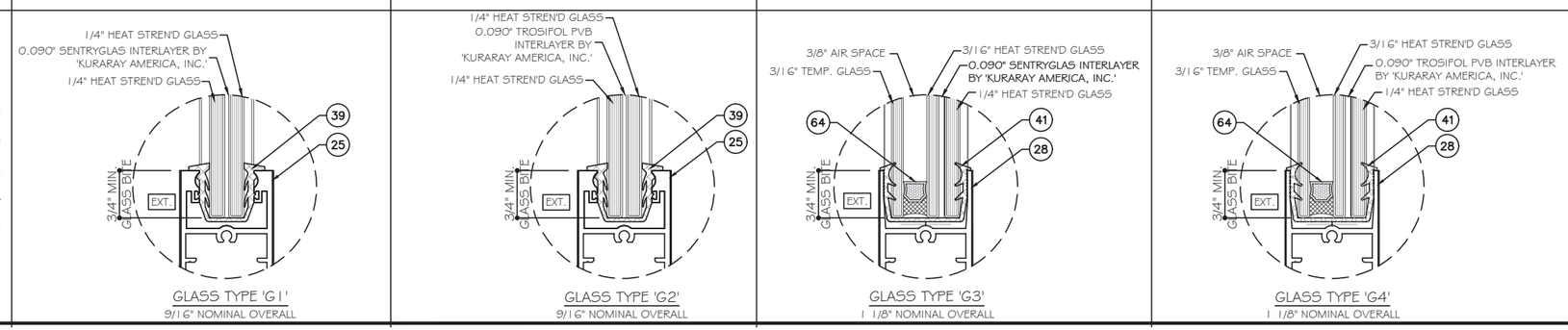

NOTE:
GLASS COMPLIES WITH ASTM E1300-09 (3 SEC. GUSTS).

NOTE:
PARTS 39 40 41 43 ARE ALSO USED AS SETTING BLOCK.

YIPING WANG, P.E.
FLORIDA REGISTRATION
LICENSE NO. 55983
C.A.N. 28077
STATE OF FLORIDA
PROFESSIONAL ENGINEER
October 23rd, 2024

MCY ENGINEERING, INC.
GLAZING CONSULTANTS
12781 MIRAMAR PARKWAY #301
MIRAMAR, FL 33027
P: 305.271.0117
www.MCYEngineering.com
mcy@mcyengineering.com

ES-SGD2020 SLIDING GLASS DOOR (LMI & SMI)

ES WINDOWS, INC.
10653 NE Quaybridge Ct.
Miami, FL 33138
TEL. (305) 624-7775

Rev. No.	Date	Drawn By	REVISION	Description
R.6	10.08.2024	James		

Drawn Date 10.08.2024
Scale

DRAWING NO.
AD16-29

G1

Sheet No.
14 OF 59

DESIGN LOAD CAPACITY - PSF

SGD PANEL SIZES		LEVEL 1 (STD INTERLOCK W/ REINF.)	LEVEL 2 (BELLY INTERLOCK W/O REINF.)	LEVEL 3 (BELLY INTERLOCK W/ REINF.)
AVE. PANEL WIDTH	DOOR HEIGHT	PSF	PSF	PSF
(IN)	(IN)	+/-	+/-	+/-
36	102	+85/-100	65.0 / 78.0	90.0 / 150.0
42	102	+85/-100	65.0 / 78.0	90.0 / 150.0
48	102	+85/-100	65.0 / 78.0	90.0 / 150.0
54	102	+85/-100	65.0 / 78.0	90.0 / 150.0
60	102	+85/-100	65.0 / 78.0	90.0 / 102.0
66	102	+85/-100	65.0 / 78.0	90.0 / 102.0
72	102	-	65.0 / 78.0	90.0 / 102.0
36	108	+85/-100	65.0 / 78.0	90.0 /150.0
42	108	+85/-100	65.0 / 78.0	90.0 /150.0
48	108	+85/-100	65.0 / 78.0	90.0 /150.0
54	108	+85/-100	65.0 / 78.0	90.0 /102.0
60	108	+85/-100	65.0 / 78.0	90.0 / 102.0
66	108	+85/-100	65.0 / 78.0	90.0 / 102.0
72	108	-	65.0 / 78.0	90.0 / 102.0
36	114	+85/-100	65.0 / 78.0	90.0 /150.0
42	114	+85/-100	65.0 / 78.0	90.0 /150.0
48	114	+85/-100	65.0 / 78.0	90.0 /150.0
54	114	+85/-100	65.0 / 78.0	90.0 / 102.0
60	114	+85/-100	65.0 / 78.0	90.0 / 102.0
66	114	-	65.0 / 78.0	90.0 / 102.0
72	114	-	65.0 / 78.0	90.0 / 102.0
36	120	+85/-100	65.0 / 78.0	90.0 /150.0
42	120	+85/-100	65.0 / 78.0	90.0 /150.0
48	120	+85/-100	65.0 / 78.0	90.0 /150.0
54	120	+85/-100	65.0 / 78.0	90.0 / 102.0
60	120	+85/-100	65.0 / 78.0	90.0 / 102.0
66	120	-	65.0 / 78.0	90.0 / 102.0
72	120	-	65.0 / 78.0	90.0 / 102.0
36	126	-	65.0 / 78.0	85.0 / 102.0
42	126	-	65.0 / 78.0	85.0 / 102.0
48	126	-	65.0 / 78.0	85.0 / 102.0
54	126	-	65.0 / 78.0	85.0 / 102.0
60	126	-	65.0 / 78.0	85.0 / 102.0
66	126	-	65.0 / 78.0	85.0 / 102.0
36	132	-	65.0 / 78.0	85.0 / 102.0
42	132	-	65.0 / 78.0	85.0 / 102.0
48	132	-	65.0 / 78.0	85.0 / 102.0
54	132	-	65.0 / 78.0	85.0 / 102.0
60	132	-	65.0 / 78.0	85.0 / 102.0
66	132	-	65.0 / 78.0	85.0 / 102.0
36	138	-	65.0 / 78.0	85.0 / 102.0
42	138	-	65.0 / 78.0	85.0 / 102.0
48	138	-	65.0 / 78.0	85.0 / 102.0
54	138	-	65.0 / 78.0	85.0 / 102.0
60	138	-	65.0 / 78.0	85.0 / 102.0

DESIGN LOAD CAPACITY - PSF

SGD PANEL SIZES		LEVEL 1 (STD INTERLOCK W/ REINF.)	LEVEL 2 (BELLY INTERLOCK W/O REINF.)	LEVEL 3 (BELLY INTERLOCK W/ REINF.)
AVE. PANEL WIDTH	DOOR HEIGHT	PSF	PSF	PSF
(IN)	(IN)	+/-	+/-	+/-
36	144	-	65.0 / 78.0	85.0 / 102.0
42	144	-	65.0 / 78.0	85.0 / 102.0
48	144	-	65.0 / 78.0	85.0 / 102.0
54	144	-	65.0 / 78.0	85.0 / 102.0
60	144	-	65.0 / 78.0	85.0 / 102.0

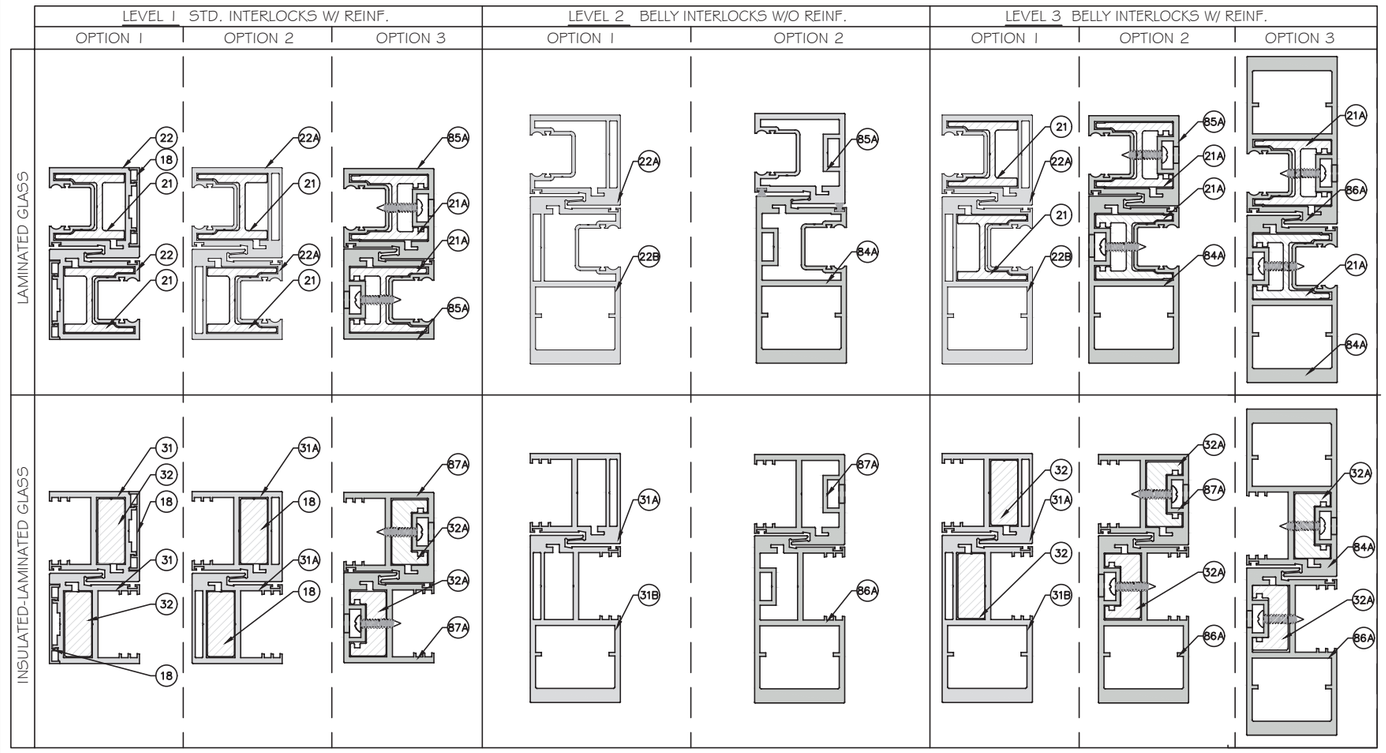

AVE. PANEL WIDTH = FRAME WIDTH / # OF PANELS

YIPING WANG, P.E.
FLORIDA REGISTRATION
PE #55983
C.A.N. 28677
STATE OF FLORIDA PROFESSIONAL ENGINEER
October 23rd, 2024

MCY ENGINEERING, INC.
GLAZING CONSULTANTS
12781 MIRAMAR PARKWAY #301
MIRAMAR, FL. 33027 P: 305.271.0117
www.MCYEngineering.com mcy@mcyengineering.com

ES-SGD2020 SLIDING GLASS DOOR (LMI & SMI)

ES WINDOWS, INC.
10653 NE Quaybridge Ct.
Miami, FL 33138
TEL. (305) 624-7775

Rev. No.	Date	Drawn By	Description
R3	10.06.2024	James	REVISION

Drawn Date 10.08.2024
Scale

DRAWING NO.
AD16-29

K1

Sheet No.
15 OF 59

SILL RAISER OPTIONS (SHOWN ON 2 TRACK DOORS)
POSITIVE LOAD LIMITED AS FOLLOW DUE TO WATER INFILTRATION

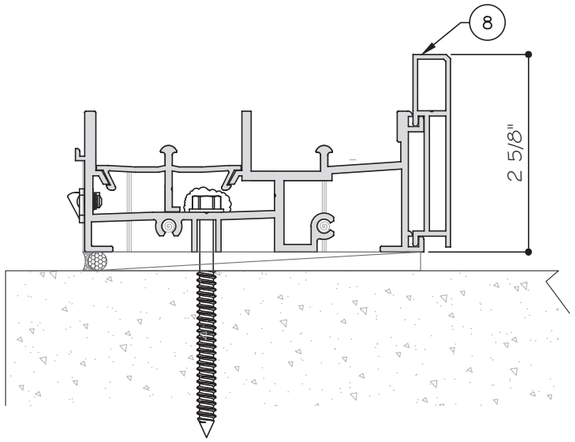

Pd MAX.=+53 PSF

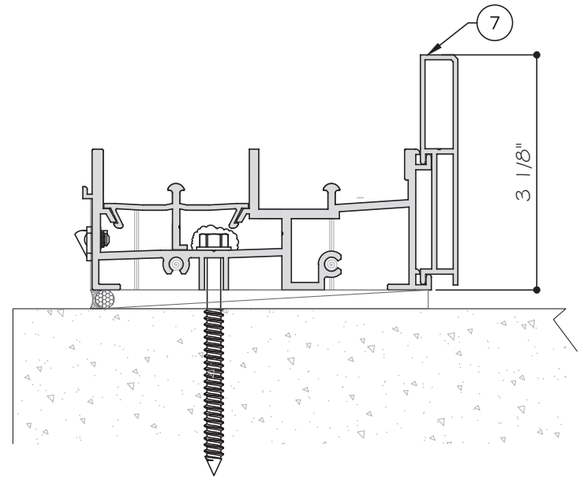

Pd MAX.=+67 PSF

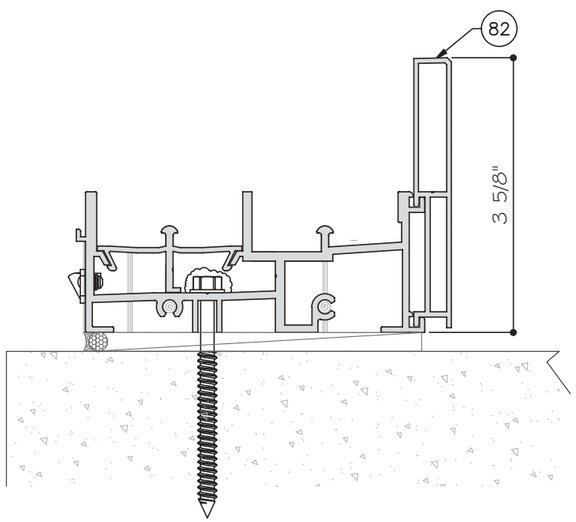

Pd MAX.=+80 PSF

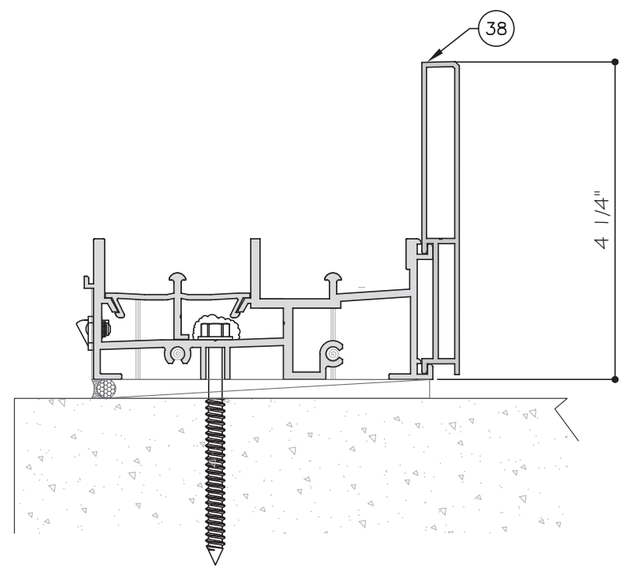

Pd MAX.=+90 PSF

YIPING WANG P.E.
FLORIDA REGISTRATION
FL #55983
C.A.N. 6387
STATE OF FLORIDA PROFESSIONAL ENGINEER
October 23rd, 2024

MCY ENGINEERING, INC.
GLAZING CONSULTANTS
12781 MIRAMAR PARKWAY #301
MIRAMAR, FL. 33027 P: 305.271.0117
www.MCYEngineering.com mcy@mcyengineering.com

ES-SGD2020 SLIDING GLASS DOOR (LMI & SMI)

ES WINDOWS, INC.
10653 NE Quaybridge Ct.
Miami, FL 33138
TEL. (305) 624-7775

Rev. No.	Date	Drawn By	REVISION	Description
K5	10.08.2024	James		

Drawn Date 10.08.2024
Scale

DRAWING NO.
AD16–29

K2

Sheet No.
16 OF 59

2 TRACK FREE STANDING JAMB CAPACITY - PSF

SGD PANEL SIZES		JAMB W/O REINF. (J1)		JAMB W/ ALUM REINF. (J2)		JAMB W/ STEEL REINF. (J2S)	
AVE.PANEL WIDTH	DOOR HEIGHT	PSF	PSF	PSF	PSF	PSF	PSF
(IN)	(IN)	+	-	+	-	+	-
60	84	65	77	85	100	85	100
66		65	73	85	100	85	100
72		65	71	85	100	85	100
78		65	69	85	100	85	100
84		65	68	85	100	85	100
60	90	65	66	85	100	85	100
66		62	62	85	98	85	100
72		59	59	85	94	85	100
78		57	57	85	91	85	100
84		56	56	65	74	65	78
60	96	56	56	85	90	85	100
66		53	53	85	84	85	100
72		50	50	80	80	85	96
78		48	48	64	64	65	78
84		47	47	62	62	65	78
36	102	65	76	85	100	85	100
42		65	66	85	100	85	100
48		59	59	85	93	85	100
54		53	53	85	85	85	100
60		49	49	78	78	85	94
66		46	46	73	73	85	88
72		43	43	57	57	65	78
78		42	42	55	55	65	78
84		40	40	53	53	65	77
36	108	65	67	85	100	85	100
42		58	58	85	93	85	100
48		52	52	83	83	85	99
54		47	47	75	75	85	90
60		43	43	69	69	83	83
66		40	40	64	64	77	77
72		38	38	50	50	65	73
78		36	36	48	48	65	69
36	114	60	60	85	95	85	100
42		52	52	83	83	85	100
48		46	46	74	74	85	88
54		42	42	66	66	80	80
60		38	38	61	61	73	73
66		36	36	47	47	65	68
72		33	33	44	44	64	64

2 TRACK FREE STANDING JAMB CAPACITY - PSF

SGD PANEL SIZES		JAMB W/O REINF. (J1)		JAMB W/ ALUM REINF. (J2)		JAMB W/ STEEL REINF. (J2S)	
AVE. PANEL WIDTH	DOOR HEIGHT	PSF	PSF	PSF	PSF	PSF	PSF
(IN)	(IN)	+	-	+	-	+	-
36	120	54	54	85	85	85	100
42		47	47	74	74	85	89
48		42	42	66	66	79	79
54		37	37	59	59	72	72
60		34	34	54	54	66	66
66		32	32	42	42	61	61
72		30	30	39	39	57	57
36	126	49	49	64	64	65	78
42		42	42	56	56	65	78
48		37	37	49	49	65	72
54		34	34	44	44	64	64
60		31	31	41	41	59	59
66		29	29	38	38	55	55
36	132	44	44	59	59	65	78
42		38	38	51	51	65	73
48		34	34	45	45	65	65
54		31	31	40	40	58	58
60		28	28	37	37	53	53
36	138	41	41	53	53	65	77
42		35	35	46	46	65	67
48		31	31	41	41	59	59
54		28	28	37	37	53	53
60		25	25	33	33	48	48
36	144	37	37	49	49	65	71
42		32	32	42	42	61	61
48		28	28	37	37	54	54
54		25	25	33	33	49	49
60		23	23	31	31	44	44

$$\text{AVE. PANEL WIDTH} = \frac{\text{FRAME WIDTH}}{\text{\# OF PANELS}}$$

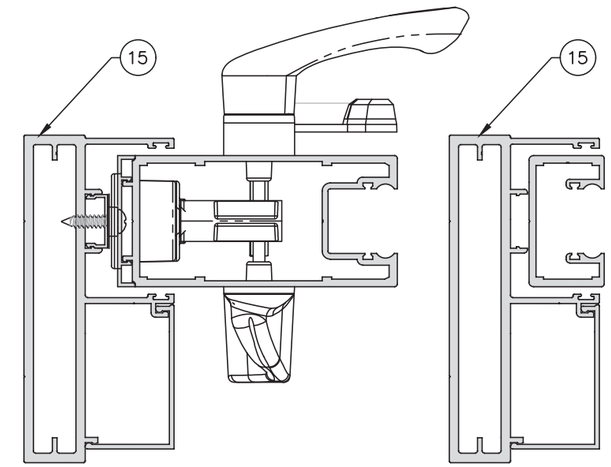

JAMB W/ LOCK STILE UNREINF.

JAMB W/ FIX STILE UNREINF.

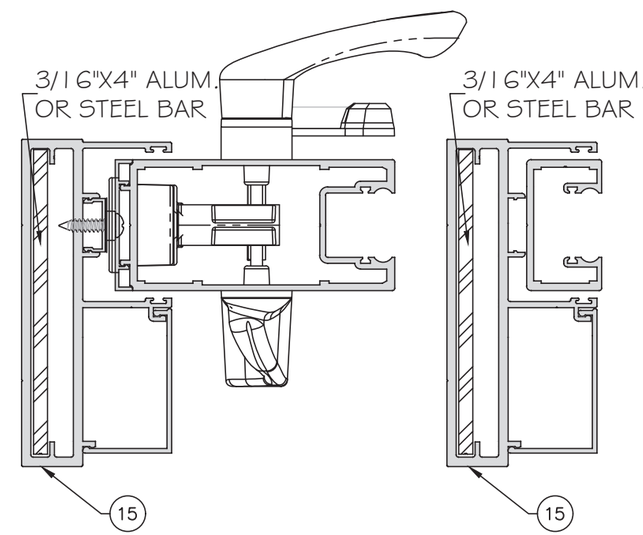

JAMB W/ LOCK STILE REINF.

JAMB W/ FIX STILE REINF.

NOTE: STILE SHOWN FOR LAMINATED GLASS OPTION ONLY. CHART COVERS BOTH INSULATED LAMINATED AND LAMINATED GLASS OPTIONS.

YIMING WANG, P.E.
FLORIDA REGISTRATION
FL #55983
C.A.N. 28677
STATE OF FLORIDA PROFESSIONAL ENGINEER
No 55983
October 23rd, 2024

MCY ENGINEERING, INC.
GLAZING CONSULTANTS
12781 MIRAMAR PARKWAY #301
MIRAMAR, FL. 33027
P: 305.271.0117
www.MCYEngineering.com mcy@mcyengineering.com

ES-SGD2020 SLIDING GLASS DOOR (LMI & SMI)

ES WINDOWS, INC.
10653 NE Quaybridge Ct.
Miami, FL 33138
TEL. (305) 624-7775

Rev. No.	Date	Drawn By	Description
RJS	10.08.2024	James	REVISION

Drawn Date 10.08.2024

Scale

DRAWING NO. AD16–29

J1

Sheet No. 17 OF 59

3 TRACK F.STANDING JAMB CAPACITY - PSF

SGD PANEL SIZES		JAMB W/ ALUM REINF. (J3)	
AVE. PANEL WIDTH (IN)	DOOR HEIGHT (IN)	PSF +	PSF -
60	84	85	102
66		85	102
72		85	102
78		85	102
84		85	102
60	90	85	102
66		85	102
72		85	102
78		85	102
84		85	102
60	96	85	102
66		85	102
72		85	102
78		85	102
84		85	102
36	102	85	102
42		85	102
48		85	102
54		85	102
60		85	102
66		85	102
72		85	102
78		85	102
84		85	102
36	108	85	102
42		85	102
48		85	102
54		85	102
60		85	102
66		85	102
72		85	102
78		85	102
36	114	85	102
42		85	102
48		85	102
54		85	102
60		85	102
66		85	102
72		85	102

3 TRACK DESIGN LOAD JAMB CAPACITY - PSF

SGD PANEL SIZES		JAMB W/ ALUM REINF. (J3)	
PANEL WIDTH (IN)	DOOR HEIGHT (IN)	PSF +	PSF -
36	120	85	102
42		85	102
48		85	102
54		85	102
60		85	102
66		85	102
72		85	102
36	126	85	102
42		85	102
48		85	102
54		85	102
60		85	102
66		85	102
36	132	85	102
42		85	102
48		85	102
54		85	102
60		85	102
36	138	85	102
42		85	102
48		85	102
54		85	102
60		85	98
36	144	85	102
42		85	102
48		85	102
54		85	99
60		85	90

$$\text{AVE. PANEL WIDTH} = \frac{\text{FRAME WIDTH}}{\text{\# OF PANELS}}$$

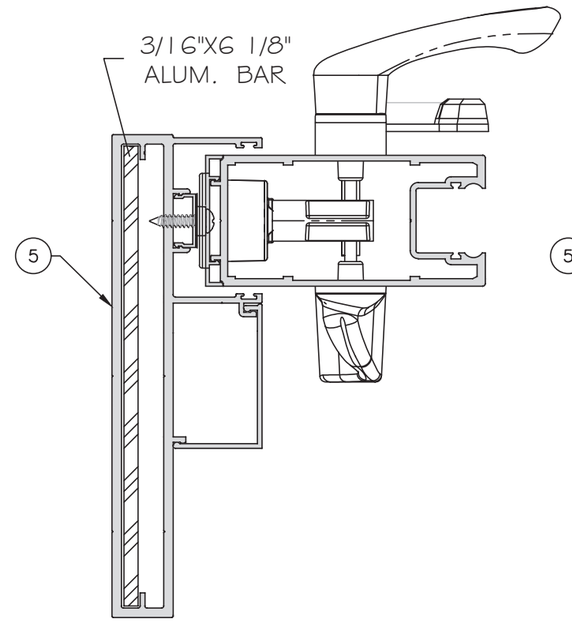

JAMB W/ LOCK STILE REINF.

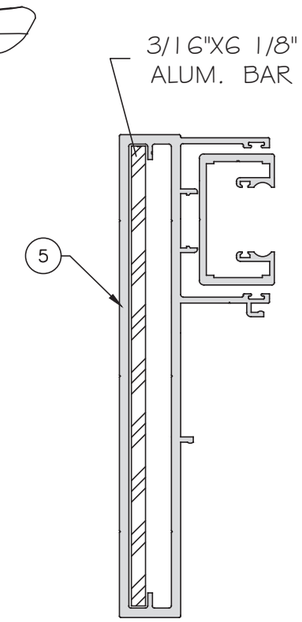

JAMB W/ FIX STILE REINF.

NOTE: STILE SHOWN FOR LAMINATED GLASS OPTION ONLY. CHART COVERS BOTH INSULATED LAMINATED AND LAMINATED GLASS OPTIONS.

YIPING WANG P.E.
FLORIDA REGISTRATION
FL #55983
C.A.N. 28577
STATE OF FLORIDA PROFESSIONAL ENGINEER
No 55983
October 23rd, 2024

MCY ENGINEERING, INC.
GLAZING CONSULTANTS
12781 MIRAMAR PARKWAY #301
MIRAMAR, FL. 33027 P: 305.271.0117
www.MCYEngineering.com mcy@mcyengineering.com

ES-SGD2020 SLIDING GLASS DOOR (LMI & SMI)

ES WINDOWS, INC.
10653 NE Quaybridge Ct.
Miami, FL 33138
TEL. (305) 624-7775

Rev. No.	Date	Drawn By	Description
RJS	10.08.2024	James	REVISION

Drawn Date	Scale
10.08.2024	

DRAWING NO.
AD16–29

J2

Sheet No.
18 OF 59

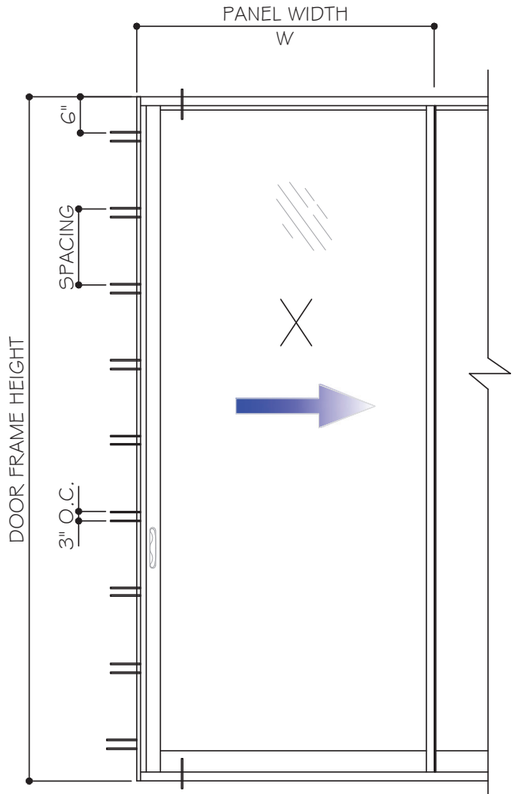

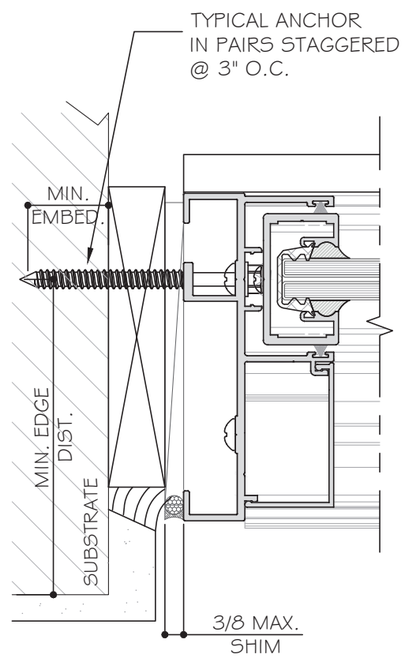

2 TRACK SGD

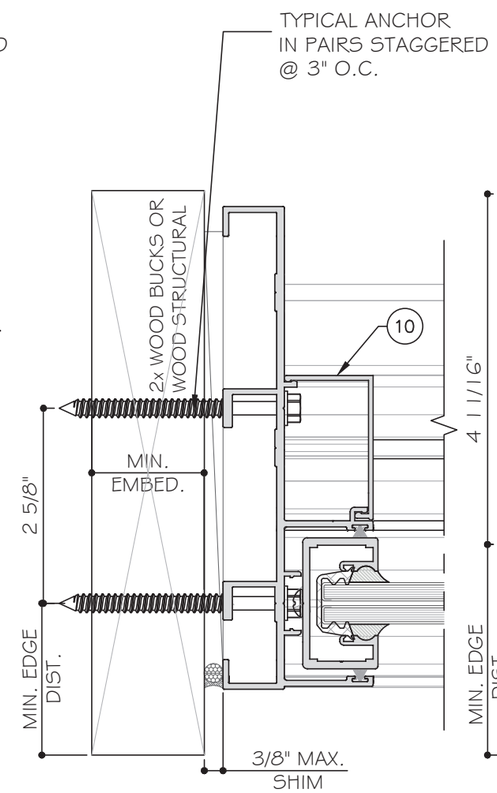

3 TRACK SGD

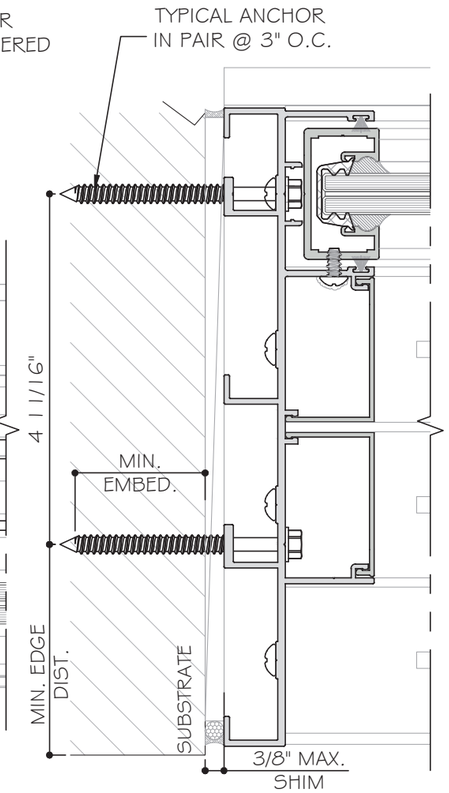

4 TRACK SGD

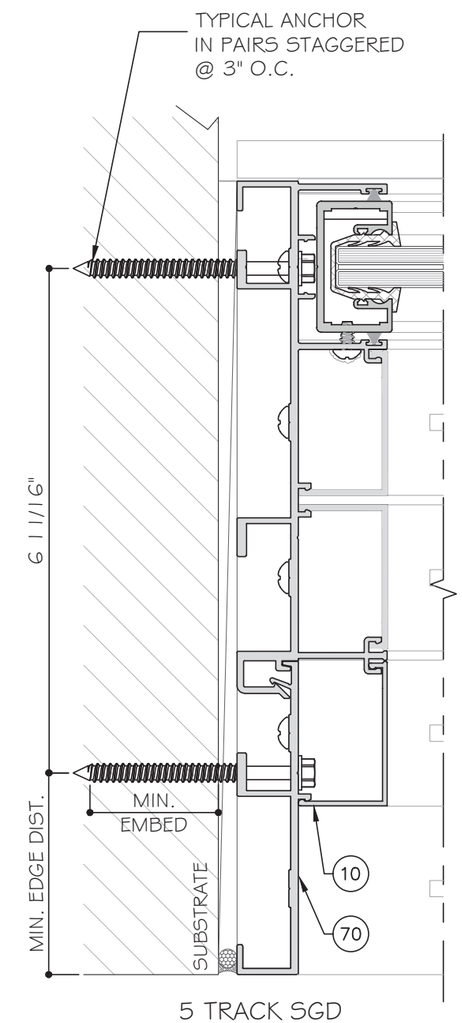

5 TRACK SGD

JAMB ANCHOR TYPES:

TYPE "A1": 1/4" DIA. KWIKCON (Fu=138 KSI, Fy=137 KSI)
- 1 1/2" MIN. EMBED INTO 2X WOOD OR WOOD
- THRU 1X WOOD BUCKS 1 3/4" MIN. EMBED INTO f'c=3 KSI MIN. CONCRETE
- 1 3/4" MIN. EMBED DIRECTLY INTO f'c=3 KSI MIN. CONCRETE

1/4" DIA. KWIKCON (Fu=138 KSI, Fy=137 KSI)
- 1 1/2" MIN. EMBED INTO 2X WOOD OR WOOD
- THRU 1X WOOD BUCKS 1 3/4" MIN. EMBED INTO f'c=3 KSI MIN. CONCRETE
- 1 3/4" MIN. EMBED DIRECTLY INTO f'c=3 KSI MIN. CONCRETE

TYPE "B1": 1/4" DIA. ULTRACON+ BY DEWALT(Fu=164 KSI, Fy=148 KSI)
- 1 1/2" MIN. EMBED INTO 2X WOOD OR WOOD
- THRU 1X WOOD BUCKS 1 3/4" MIN. EMBED INTO f'c=3 KSI MIN. CONCRETE
- 1 3/4" MIN. EMBED DIRECTLY INTO f'c=3 KSI MIN. CONCRETE

TYPE "C1": 1/4" DIA. TEKS/DRIL-FLEX SCREW GRADE 5 (Fu=120 KSI, Fy=92 KSI) INTO METAL STRUCTURE

TYPE "D1": 5/16" TEKS/DRIL-FLEX SCREW (Fu=120 KSI, Fy=92 KSI) INTO METAL STRUCTURE

ALUMINUM: 1/8" THK. MIN. (6063-T5 MIN.)
STEEL: 1/8" THK. MIN. (Fy=36KSI, MIN.)
STEEL IN CONTACT WITH ALUM. TO BE PAINTED.

MIN. EDGE DISTANCE: CONCRETE 2 1/2" WOOD: 1" METAL: 1"

JAMB ANCHOR CHART

2 TRACK, 3 TRACK, 4 TRACK OR 5 TRACK

JAMB ANCHOR TYPE	SUBSTRATE	MAX. SHIM	ANCHOR SPACING	
			W≤72"	72"<W≤84"
A1	CONC.	1/4"	18"	17"
A1	WOOD/CONC.	3/8"	15"	13"
A1	WOOD/C90 BLOCK	3/8"	13"	11"
B1	CONC.	3/8"	18"	17"
B1	WOOD/CONC.	3/8"	13"	11"
C1	1/8" THK. METAL(6063-T5)	1/4"	18"	18"
C1		3/8"	13"	11"
D1		3/8"	18"	18"

NOTE:
WOOD BUCKS/ METAL STRUCTURES BY OTHERS MUST BE PROPERLY SECURED TO SUPPORT LOADS IMPOSED BY GLAZING SYSTEM AND TRANSFER THEM TO THE BUILDING STRUCTURES.

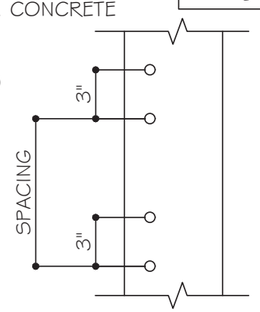

2 TRACK SGD

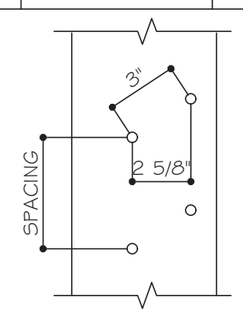

3 TRACK SGD

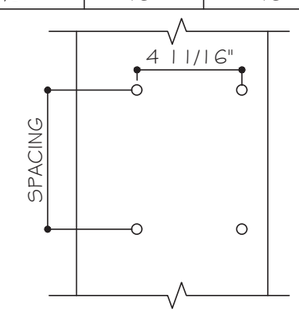

4 TRACK SGD

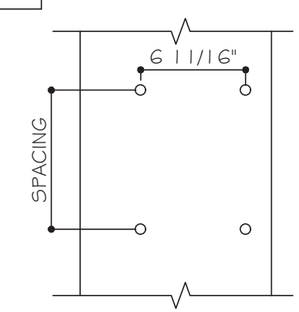

5 TRACK SGD

YIANG WANG P.E.
FLORIDA REGISTRATION
No #55983
C.A.N. 28577
STATE OF FLORIDA
PROFESSIONAL ENGINEER
October 23rd, 2024

MCY ENGINEERING, INC.
GLAZING CONSULTANTS
12781 MIRAMAR PARKWAY #301
MIRAMAR, FL. 33027 P: 305.271.0117
www.MCYEngineering.com mcy@mcyengineering.com

ES-SGD2020 SLIDING GLASS DOOR (LMI & SMI)

ES WINDOWS, INC.
10653 NE Quaybridge Ct.
Miami, FL 33138
TEL. (305) 624-7775

Rev. No.	Date	Drawn By	REVISION	Description
R5	10.08.2024	James		

Drawn Date 10.08.2024
Scale

DRAWING NO.
AD16-29

J3

Sheet No.
19 OF 59

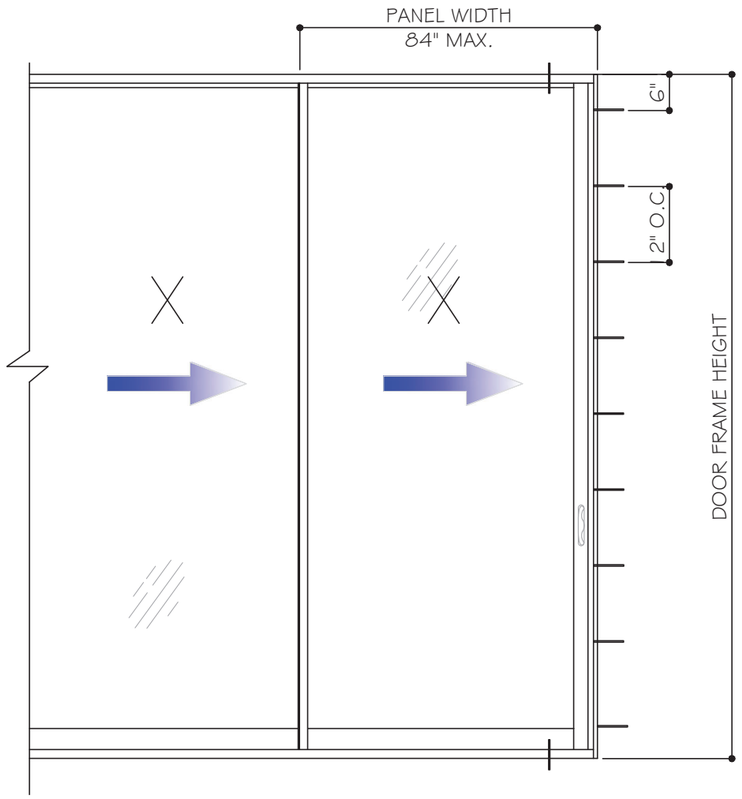

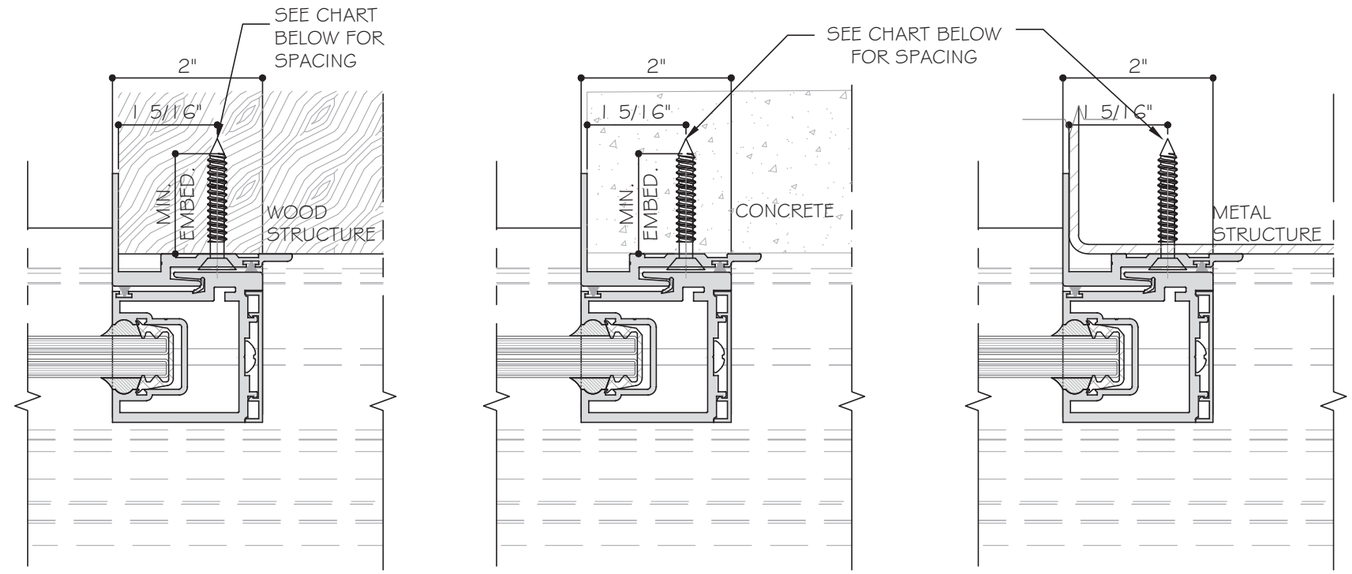

ANCHOR TYPE	EMBEDMENT	SUBSTRATE	ANCHOR SPACING	
			W≤72"	72"<W≤84"
A2 (1/4" ULTRACON)	1 3/4"	CONCRETE	12"	11"
D2(#14 TEKS)	3/16"	ALUM.6063-T6	16"	14"
D2(#14 SMS)	1/8"	STL	14"	12"
D2A(#14 SMS)	1 1/2"	WOOD SG=0.55	13"	11"

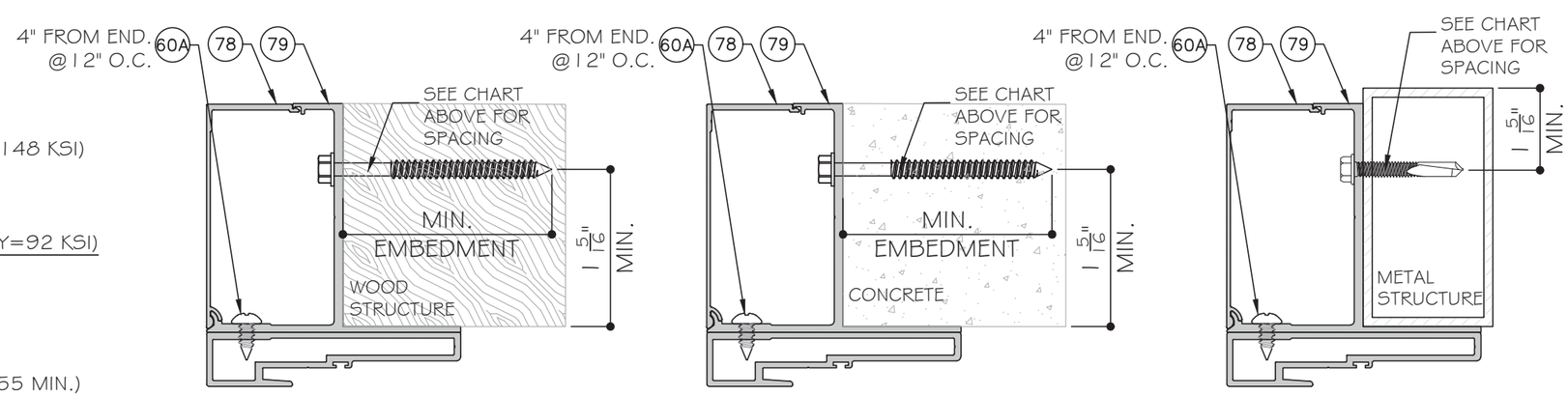

JAMB ANCHOR TYPES:

TYPE "B2": 1/4" DIA. ULTRACON+ BY DEWALT (Fu=164 KSI, Fy=148 KSI)
1 3/4" MIN. EMBED INTO f'c=3 KSI MIN. CONCRETE
1 5/16" MIN. EDGE DISTANCE

TYPE "D2": 1/4" DIA. TEKS-SELF DRILLING SCREW (Fu=120 KSI,FY=92 KSI)
INTO METAL STRUCTURE
ALUMINUM: 3/16" THK. MIN. (6063-T6 MIN.)
STEEL: 1/8" THK. MIN. (Fy=36KSI, MIN.)

TYPE "D2A": 1/4" DIA. SMS (Fu=74 KSI, Fy=57 KSI)
1 1/2" MIN. EMBED INTO WOOD STRUCTURE (SG=0.55 MIN.)
1" MIN. EDGE DISTANCE

NOTE:
WOOD BUCKS/ METAL STRUCTURES BY OTHERS MUST BE PROPERLY SECURED TO SUPPORT LOADS IMPOSED BY GLAZING SYSTEM AND TRANSFER THEM TO THE BUILDING STRUCTURES.

YIPING WANG, P.E.
FLORIDA REGISTRATION
FL #55983
C.A.N. 23877
STATE OF FLORIDA PROFESSIONAL ENGINEER
October 23rd, 2024

MCY ENGINEERING, INC.
GLAZING CONSULTANTS
12781 MIRAMAR PARKWAY #301
MIRAMAR, FL. 33027
P: 305.271.0117
www.MCYEngineering.com mcy@mcyengineering.com

ES-SGD2020 SLIDING GLASS DOOR (LMI & SMI)

ES WINDOWS, INC.
10653 NE Quaybridge Ct.
Miami, FL 33138
TEL. (305) 624-7775

Rev. No.	Date	Drawn By	Description
RJS	10.08.2024	James	REVISION

Drawn Date 10.08.2024
Scale

DRAWING NO.
AD16-29

J4

Sheet No.
20 OF 59

HEAD ANCHOR CAPACITY - PSF

SGD PANEL SIZES		ANCHOR TYPE "A" OR "AA"				ANCHOR TYPE "B"		
AVE. PANEL WIDTH	DOOR HEIGHT	A4 AA4	A6 AA6	A8 AA8	A10 AA10	B4	B6	B8
(IN)	(IN)	+/-	+/-	+/-	+/-	+/-	+/-	+/-
36	84	132.4	150.0	150.0	150.0	150.0	150.0	150.0
42		118.9	150.0	150.0	150.0	150.0	150.0	150.0
48		109.2	150.0	150.0	150.0	140.0	150.0	150.0
54		102.2	150.0	150.0	150.0	131.0	150.0	150.0
60		97.1	145.6	150.0	150.0	124.4	150.0	150.0
66		93.4	140.1	150.0	150.0	119.8	150.0	150.0
72		91.0	136.5	150.0	150.0	116.7	150.0	150.0
78		89.6	134.4	150.0	150.0	114.9	150.0	150.0
84		89.1	133.7	150.0	150.0	114.3	150.0	150.0
36	90	121.3	150.0	150.0	150.0	150.0	150.0	150.0
42		108.5	150.0	150.0	150.0	139.1	150.0	150.0
48		99.3	148.9	150.0	150.0	127.3	150.0	150.0
54		92.4	138.7	150.0	150.0	118.5	150.0	150.0
60		87.4	131.0	150.0	150.0	112.0	150.0	150.0
66		93.6	125.4	150.0	150.0	107.2	150.0	150.0
72		80.9	121.3	150.0	150.0	103.7	150.0	150.0
78		79.1	118.6	150.0	150.0	101.4	150.0	150.0
84		78.0	117.0	150.0	150.0	100.0	150.0	150.0
36	96	112.0	150.0	150.0	150.0	143.6	150.0	150.0
42		99.8	149.8	150.0	150.0	128.0	150.0	150.0
48		91.0	136.5	150.0	150.0	116.7	150.0	150.0
54		84.4	126.6	150.0	150.0	108.2	150.0	150.0
60		79.4	119.1	150.0	150.0	101.8	150.0	150.0
66		75.6	113.5	150.0	150.0	97.0	145.5	150.0
72		82.8	109.2	145.6	150.0	93.3	140.0	150.0
78		70.7	106.1	141.5	150.0	90.7	136.0	150.0
84		69.3	104.0	138.7	150.0	88.9	133.3	150.0
36	102	104.0	150.0	150.0	150.0	133.3	150.0	150.0
42		92.4	138.7	150.0	150.0	118.5	150.0	150.0
48		84.0	126.0	150.0	150.0	107.7	150.0	150.0
54		77.7	116.5	150.0	150.0	99.6	149.3	150.0
60		72.8	109.2	145.6	150.0	93.3	140.0	150.0
66		69.1	103.6	138.1	150.0	88.5	132.8	150.0
72		66.2	99.3	132.4	150.0	84.8	127.3	150.0
78		64.0	96.0	128.0	150.0	82.1	123.1	150.0
84		62.4	93.6	124.8	150.0	80.0	120.0	150.0
36	108	97.1	145.6	150.0	150.0	124.4	150.0	150.0
42		86.1	129.1	150.0	150.0	110.3	150.0	150.0
48		78.0	117.0	150.0	150.0	100.0	150.0	150.0
54		71.9	107.9	143.8	150.0	92.2	138.3	150.0
60		67.2	100.8	134.4	150.0	86.2	129.2	150.0
66		63.5	95.3	127.1	150.0	81.5	122.2	150.0
72		60.7	91.0	121.3	150.0	77.8	116.7	150.0
78		58.4	87.7	116.9	146.1	74.9	112.4	149.8

HEAD ANCHOR CAPACITY - PSF

SGD PANEL SIZES		ANCHOR TYPE "A" OR "AA"				ANCHOR TYPE "B"		
AVE. PANEL WIDTH	DOOR HEIGHT	A4 AA4	A6 AA6	A8 AA8	A10 AA10	B4	B6	B8
(IN)	(IN)	+/-	+/-	+/-	+/-	+/-	+/-	+/-
36	114	91.0	136.5	150.0	150.0	116.7	150.0	150.0
42		80.5	120.8	150.0	150.0	103.2	150.0	150.0
48		72.8	109.2	145.6	150.0	93.3	140.0	150.0
54		66.9	100.4	133.9	150.0	85.8	128.7	150.0
60		62.4	93.6	124.8	150.0	80.0	120.0	150.0
66		58.8	88.2	117.7	147.1	75.4	113.1	150.0
72		56.0	84.0	112.0	112.0	71.8	107.7	143.6
36	120	85.6	128.5	150.0	150.0	109.8	150.0	150.0
42		75.6	113.5	150.0	150.0	97.0	145.5	150.0
48		68.3	102.4	136.5	150.0	87.5	131.3	150.0
54		62.6	93.9	125.2	150.0	80.3	120.4	150.0
60		58.2	87.4	116.5	145.6	74.7	112.0	149.3
66		54.8	82.2	109.5	136.9	70.2	105.3	140.4
72		52.0	78.0	104.0	130.0	66.7	100.0	133.3
36	126	80.9	121.3	150.0	150.0	103.7	150.0	150.0
42		71.3	107.0	142.6	150.0	91.4	137.1	150.0
48		64.2	96.4	128.5	150.0	82.4	123.5	150.0
54		58.8	88.2	117.7	147.1	75.4	113.1	150.0
60		54.6	81.9	109.2	136.5	70.0	105.0	140.0
66		51.2	76.9	102.5	128.1	65.7	98.5	131.4
36	132	76.6	114.9	150.0	150.0	98.2	147.4	150.0
42		67.5	101.2	134.9	150.0	86.5	129.7	150.0
48		60.7	91.0	121.3	150.0	77.8	116.7	150.0
54		55.5	83.2	110.9	138.7	71.1	106.7	142.2
60		51.4	77.1	102.8	128.5	65.9	98.8	131.8
66		48.1	72.2	96.3	120.3	61.7	92.6	123.4
36	138	72.8	109.2	145.6	150.0	93.3	140.0	150.0
42		64.0	96.0	128.0	150.0	82.1	123.1	150.0
48		57.5	86.2	114.9	143.7	73.7	110.5	147.4
54		52.5	78.7	104.9	131.2	67.3	100.9	134.5
60		48.5	72.8	97.1	121.3	62.2	93.3	124.4
36	144	69.3	104.0	138.7	150.0	88.9	133.3	150.0
42		60.9	91.3	121.8	150.0	78.0	117.1	150.0
48		54.6	81.9	109.2	136.5	70.0	105.0	140.0
54		49.8	74.7	99.6	124.4	63.8	95.7	127.6
60		46.0	69.0	92.0	114.9	58.9	88.4	117.9

A4 OR AA4 - A CLUSTER OF (4) TYPE "A" OR "AA" ANCHORS AT HEAD
A6 OR AA6- A CLUSTER OF (6) TYPE "A" OR "AA" ANCHORS AT HEAD
A8 OR AA8- A CLUSTER OF (8) TYPE "A" OR "AA" ANCHORS AT HEAD
A10 OR AA10 - A CLUSTER OF (10) TYPE "A" OR "AA" ANCHORS AT HEAD
B4 - A CLUSTER OF (4) TYPE "B" ANCHORS AT HEAD
B6 - A CLUSTER OF (6) TYPE "B" ANCHORS AT HEAD
B8 - A CLUSTER OF (8) TYPE "B" ANCHORS AT HEAD

FOR ANCHOR TYPES & LAYOUT, SEE SHEET A6 & A7

YIYING WANG P.E.
FLORIDA REGISTRATION
LIC #55983
C.A.N. 28677
STATE OF FLORIDA PROFESSIONAL ENGINEER
October 23rd, 2024

MCY ENGINEERING, INC.
GLAZING CONSULTANTS
12781 MIRAMAR PARKWAY #301
MIRAMAR, FL. 33027 P: 305.271.0117
www.MCYEngineering.com mcy@mcyengineering.com

ES-SGD2020 SLIDING GLASS DOOR (LMI & SMI)

ES WINDOWS, INC.
10653 NE Quaybridge Ct.
Miami, FL 33138
TEL. (305) 624-7775

Rev. No.	Date	Drawn By	REVISION	Description
RB	10.08.2024	James		

Drawn Date 10.08.2024
Scale

DRAWING NO.
AD16–29

A1

Sheet No.
21 OF 59

HEAD ANCHOR CAPACITY - PSF					
SGD PANEL SIZES		ANCHOR TYPE "BB"			
AVE. PANEL WIDTH (IN)	DOOR HEIGHT (IN)	BB4 +/-	BB6 +/-	BB8 +/-	BB10 +/-
78	84	77.8	116.7	150.0	150.0
84		77.4	116.1	150.0	150.0
78	90	68.6	103.0	137.3	150.0
84		67.7	101.6	135.4	150.0
36	96	97.2	145.8	150.0	150.0
42		86.7	130.0	150.0	150.0
48		79.0	118.5	150.0	150.0
54		73.3	109.9	146.6	150.0
60		68.9	103.4	137.9	150.0
66		65.7	98.5	131.3	150.0
72		63.2	94.8	126.4	150.0
78		61.4	92.1	122.8	150.0
84		60.2	90.3	120.4	150.0
36	102	90.3	135.4	150.0	150.0
42		80.3	120.4	150.0	150.0
48		72.9	109.4	145.8	150.0
54		67.4	101.1	134.8	150.0
60		63.2	94.8	126.4	150.0
66		60.0	89.9	119.9	149.9
72		57.5	86.2	114.9	143.6
76		55.6	83.3	111.1	138.9
84		54.2	81.3	108.3	135.4
36	108	84.3	126.4	150.0	150.0
42		74.7	112.1	149.4	150.0
48		67.7	101.6	135.4	150.0
54		62.4	93.6	124.8	150.0
60		58.3	87.5	116.7	145.8
66		55.2	82.7	110.3	137.9
72		52.7	79.0	105.3	131.7
78		50.7	76.1	101.5	126.8
36	114	79.0	118.5	150.0	150.0
42		69.9	104.8	139.8	150.0
48		63.2	94.8	126.4	150.0
54		58.1	87.2	116.2	145.3
60		54.2	81.3	108.3	135.4
66		51.1	76.6	102.1	127.7
72		48.6	72.9	97.2	121.5
36	120	74.4	111.5	148.7	150.0
42		65.7	98.5	131.3	150.0
48		59.3	88.9	118.5	148.1
54		54.4	81.5	108.7	135.9
60		50.6	75.8	101.1	126.4
66		47.5	71.3	95.1	118.9
72		45.1	67.7	90.3	112.9

HEAD ANCHOR CAPACITY - PSF					
SGD PANEL SIZES		ANCHOR TYPE "BB"			
AVE. PANEL WIDTH (IN)	DOOR HEIGHT (IN)	BB4 +/-	BB6 +/-	BB8 +/-	BB10 +/-
36	132	66.5	99.8	133.1	150.0
42		58.6	87.8	117.1	146.4
48		52.7	79.0	105.3	131.7
54		48.2	72.2	96.3	120.4
60		44.6	66.9	89.2	111.5
66		41.8	62.7	83.6	104.5
36	138	63.2	94.8	126.4	150.0
42		55.6	83.3	111.1	138.9
48		49.9	74.8	99.8	124.7
54		45.5	68.3	91.1	113.9
60		42.1	63.2	84.3	105.3
36	144	60.2	90.3	120.4	150.0
42		52.9	79.3	105.7	132.1
48		47.4	71.1	94.8	118.5
54		43.2	64.8	86.4	108.0
60		39.9	59.9	79.8	99.8

BB4 - A CLUSTER OF (4) ANCHORS TYPE "BB" AT INTERLOCK/ASTRAGAL
BB6 - A CLUSTER OF (6) ANCHORS TYPE "BB" AT INTERLOCK/ASTRAGAL
BB8 - A CLUSTER OF (8) ANCHORS TYPE "BB" AT INTERLOCK/ASTRAGAL
BB10 - A CLUSTER OF (10) ANCHORS TYPE "BB" AT INTERLOCK/ASTRAGAL

FOR ANCHOR TYPES & LAYOUT, SEE SHEET A7

YIJING WANG P.E.
FLORIDA REGISTRATION
No. #55983
C.A.N. 28677
STATE OF FLORIDA PROFESSIONAL ENGINEER
October 23rd, 2024

MCY ENGINEERING, INC.
GLAZING CONSULTANTS
12781 MIRAMAR PARKWAY #301
MIRAMAR, FL. 33027 P: 305.271.0117
www.MCYEngineering.com mcy@mcyengineering.com

ES-SGD2020 SLIDING GLASS DOOR (LMI & SMI)

ES WINDOWS, INC.
10653 NE Quaybridge Ct.
Miami, FL 33138
TEL. (305) 624-7775

Rev. No.	Date	Drawn By	Description
R5	10.08.2024	James	REVISION

Drawn Date 10.08.2024
Scale

DRAWING NO.
AD16-29

A2

Sheet No.
22 OF 59

HEAD ANCHOR CAPACITY - PSF

SGD PANEL SIZES		ANCHOR TYPE "CC"			
AVE. PANEL WIDTH (IN)	DOOR HEIGHT (IN)	CC4 +/-	CC6 +/-	CC8 +/-	CC10 +/-
78	84	88.0	131.9	150.0	150.0
84		87.5	131.3	150.0	150.0
78	90	77.6	116.4	150.0	150.0
84		76.6	114.9	150.0	150.0
36	96	109.9	150.0	150.0	150.0
42		98.0	147.0	150.0	150.0
48		89.3	134.0	150.0	150.0
54		82.9	124.3	150.0	150.0
60		78.0	116.9	150.0	150.0
66		74.3	111.4	148.5	150.0
72		71.5	107.2	142.9	150.0
78		69.4	104.2	138.9	150.0
84		68.1	102.1	136.1	150.0
36	102	102.1	150.0	150.0	150.0
42		90.8	136.1	150.0	150.0
48		82.5	123.7	150.0	150.0
54		76.2	114.3	150.0	150.0
60		71.5	107.2	142.9	150.0
66		67.8	101.7	135.6	149.9
72		65.0	97.5	129.9	143.6
78		62.8	94.2	125.7	150.0
84		61.3	91.9	122.5	150.0
36	108	95.3	142.9	150.0	150.0
42		84.5	126.7	150.0	150.0
48		76.6	114.9	150.0	150.0
54		70.6	105.9	141.2	150.0
60		66.0	99.0	131.9	150.0
66		62.4	93.6	124.7	150.0
72		59.6	89.3	119.1	148.9
78		57.4	86.0	114.7	143.4
36	114	89.3	134.0	150.0	150.0
42		79.0	118.6	150.0	150.0
48		71.5	107.2	142.9	150.0
54		65.7	98.6	131.4	150.0
60		61.3	91.9	122.5	150.0
66		57.8	86.6	115.5	144.4
72		55.0	82.5	109.9	137.4
36	120	84.1	126.1	150.0	150.0
42		74.3	111.4	148.5	150.0
48		67.0	100.5	134.0	150.0
54		61.5	92.2	123.0	150.0
60		57.2	85.8	114.3	142.9
66		53.8	80.7	107.5	134.4
72		51.0	76.6	102.1	127.6

HEAD ANCHOR CAPACITY - PSF

SGD PANEL SIZES		ANCHOR TYPE "CC"			
AVE. PANEL WIDTH (IN)	DOOR HEIGHT (IN)	CC4 +/-	CC6 +/-	CC8 +/-	CC10 +/-
36	132	75.2	112.8	150.0	150.0
42		66.2	99.3	132.4	150.0
48		59.6	89.3	119.1	148.9
54		54.5	81.7	108.9	136.1
60		50.4	75.7	100.9	126.1
66		47.3	70.9	94.5	118.1
36	138	71.5	107.2	142.9	150.0
42		62.8	94.2	125.7	150.0
48		56.4	84.6	112.8	141.1
54		51.5	77.3	103.0	128.8
60		47.6	71.5	95.3	119.1
36	144	68.1	102.1	136.1	150.0
42		59.8	89.6	119.5	149.4
48		53.6	80.4	107.2	134.0
54		48.9	73.3	97.7	122.2
60		45.1	67.7	90.3	112.8

CC4 - A CLUSTER OF (4) ANCHORS TYPE "CC" AT INTERLOCK/ASTRAGAL
CC6 - A CLUSTER OF (6) ANCHORS TYPE "CC" AT INTERLOCK/ASTRAGAL
CC8 - A CLUSTER OF (8) ANCHORS TYPE "CC" AT INTERLOCK/ASTRAGAL
CC10 - A CLUSTER OF (10) ANCHORS TYPE "CC" AT INTERLOCK/ASTRAGAL

FOR ANCHOR TYPES & LAYOUT, SEE SHEET A7

YIJING WANG P.E.
LICENSE
FL REGISTRATION
#55983
C.A.N. 28577
STATE OF FLORIDA
PROFESSIONAL ENGINEER
October 23rd, 2024

MCY ENGINEERING, INC.
GLAZING CONSULTANTS
12781 MIRAMAR PARKWAY #301
MIRAMAR, FL. 33027 P: 305.271.0117
www.MCYEngineering.com mcy@mcyengineering.com

ES-SGD2020 SLIDING GLASS DOOR (LMI & SMI)

ES WINDOWS, INC.
10653 NE Quaybridge Ct.
Miami, FL 33138
TEL. (305) 624-7775

Rev. No.	Date	Drawn By	Description
R5	10.08.2024	James	REVISION

Drawn Date 10.08.2024
Scale
DRAWING NO. AD16–29
A3
Sheet No. 23 OF 59

HEAD ANCHOR CAPACITY - PSF

SGD PANEL SIZES		ANCHOR TYPE "C"		ANCHOR TYPE "D"			ANCHOR TYPE "E"	
AVE. PANEL WIDTH (IN)	DOOR HEIGHT (IN)	C4 +/-	C6 +/-	D4 +/-	D6 +/-	D8 +/-	E4 +/-	E6 +/-
36	84	150.0	150.0	114.9	150.0	150.0	150.0	150.0
42		150.0	150.0	103.2	150.0	150.0	150.0	150.0
48		150.0	150.0	94.8	142.2	150.0	150.0	150.0
54		150.0	150.0	88.7	133.1	150.0	150.0	150.0
60		150.0	150.0	84.3	126.4	150.0	150.0	150.0
66		150.0	150.0	81.1	121.7	150.0	150.0	150.0
72		150.0	150.0	79.0	118.5	150.0	146.7	150.0
78		150.0	150.0	77.8	116.7	150.0	144.4	150.0
84		150.0	150.0	77.4	116.1	150.0	143.7	150.0
36	90	150.0	150.0	105.3	150.0	150.0	150.0	150.0
42		150.0	150.0	94.2	141.3	150.0	150.0	150.0
48		150.0	150.0	86.2	129.3	150.0	150.0	150.0
54		150.0	150.0	80.3	120.4	150.0	149.0	150.0
60		150.0	150.0	75.8	113.8	150.0	140.8	150.0
66		142.2	150.0	72.6	108.9	145.1	134.7	150.0
72		139.6	150.0	70.2	105.3	140.4	130.4	150.0
78		136.4	150.0	68.6	103.0	137.3	127.4	150.0
84		134.6	150.0	67.7	101.6	135.4	125.7	150.0
36	96	150.0	150.0	97.2	145.8	150.0	150.0	150.0
42		150.0	150.0	86.7	130.0	150.0	150.0	150.0
48		150.0	150.0	79.0	118.5	150.0	146.7	150.0
54		145.6	150.0	73.3	109.9	146.6	136.0	150.0
60		137.0	150.0	68.9	103.4	137.9	128.0	150.0
66		130.5	150.0	65.7	98.5	131.3	121.9	150.0
72		125.6	150.0	63.2	94.8	126.4	117.3	150.0
78		122.0	150.0	61.4	92.1	122.8	114.0	150.0
84		119.6	150.0	60.2	90.3	120.4	111.7	150.0
36	102	150.0	150.0	90.3	135.4	150.0	150.0	150.0
42		150.0	150.0	80.3	120.4	150.0	149.0	150.0
48		144.9	150.0	72.9	109.4	145.8	135.4	150.0
54		134.0	150.0	67.4	101.1	134.8	125.2	150.0
60		125.6	150.0	63.2	94.8	126.4	117.3	150.0
66		119.1	150.0	60.0	89.9	119.9	111.3	150.0
72		114.2	150.0	57.5	86.2	114.9	106.7	150.0
78		110.4	150.0	55.6	83.3	111.1	103.2	150.0
84		107.7	150.0	54.2	81.3	108.3	100.6	150.0
36	108	150.0	150.0	84.3	126.4	150	150.0	150.0
42		148.5	150.0	74.7	112.1	149.4	138.7	150.0
48		134.6	150.0	67.7	101.6	135.4	125.7	150.0
54		124.0	150.0	62.4	93.6	124.8	115.9	150.0
60		115.9	150.0	58.3	87.5	116.7	108.3	150.0
66		109.6	150.0	55.2	82.7	110.3	102.4	150.0
72		104.7	150.0	52.7	79.0	105.3	97.8	146.7
78		100.8	150.0	50.7	76.1	101.5	94.2	141.3

HEAD ANCHOR CAPACITY - PSF

SGD PANEL SIZES		ANCHOR TYPE "C"		ANCHOR TYPE "D"			ANCHOR TYPE "E"	
AVE. PANEL WIDTH (IN)	DOOR HEIGHT (IN)	C4 +/-	C6 +/-	D4 +/-	D6 +/-	D8 +/-	E4 +/-	E6 +/-
36	114	150.0	150.0	79.0	118.5	150.0	146.7	150.0
42		138.9	150.0	69.9	104.8	139.8	129.8	150.0
48		125.6	150.0	63.2	94.8	126.4	117.3	150.0
54		115.5	150.0	58.1	87.2	116.2	107.9	150.0
60		107.7	150.0	54.2	91.3	100.6	100.6	150.0
66		101.5	150.0	51.5	76.6	94.8	94.8	142.2
72		96.6	144.9	48.6	72.9	90.3	90.3	135.4
36	120	147.8	150.0	74.4	111.5	148.7	138.0	150.0
42		130.5	150.0	65.7	98.5	131.3	121.9	150.0
48		117.8	150.0	59.3	88.9	118.5	110.0	150.0
54		108.0	150.0	54.4	81.5	108.7	100.9	150.0
60		100.5	150.0	50.6	75.8	101.1	93.9	149.3
66		94.5	141.7	47.5	71.3	95.1	88.3	140.4
72		89.7	134.6	45.1	67.7	90.3	93.8	133.3
36	126	139.6	150.0	70.2	105.3	140.4	130.4	150.0
42		123.0	150.0	61.9	92.9	123.8	114.9	150.0
48		110.8	150.0	55.8	83.6	111.5	103.5	150.0
54		101.5	150.0	51.1	76.6	102.1	94.8	142.2
60		94.2	141.3	47.4	71.1	94.8	88.0	132.0
66		88.4	132.6	44.5	66.7	89.0	82.6	123.9
36	132	132.2	150.0	66.5	99.8	133.1	123.5	150.0
42		116.4	150.0	58.6	87.8	117.1	108.7	150.0
48		104.7	150.0	52.7	79.0	105.3	97.8	146.7
54		95.7	143.5	48.2	72.2	96.3	89.4	134.1
60		88.7	133.0	44.6	66.9	89.2	82.8	124.2
66		83.0	124.6	41.8	62.7	83.6	77.6	116.4
36	138	125.6	150.0	63.2	94.8	126.4	117.3	150.0
42		110.4	150.0	55.6	83.3	111.1	103.2	150.0
48		99.2	147.8	49.9	74.8	99.8	92.6	138.9
54		90.5	135.8	45.5	68.3	91.1	84.6	126.8
60		83.7	125.6	42.1	63.2	84.3	78.2	117.3
36	144	119.6	150.0	60.2	90.3	120.4	111.7	150.0
42		105.0	150.0	52.9	79.3	105.7	98.1	147.2
48		94.2	141.3	47.4	71.1	94.8	88.0	132.0
54		85.9	128.8	43.2	64.8	86.4	80.2	120.3
60		79.3	119.0	39.9	59.9	79.8	74.1	111.2

C4 - A CLUSTER OF (4) TYPE "C" ANCHORS AT HEAD
C6 - A CLUSTER OF (6) TYPE "C" ANCHORS AT HEAD
D4 - A CLUSTER OF (4) TYPE "D" ANCHORS AT HEAD
D6 - A CLUSTER OF (6) TYPE "D" ANCHORS AT HEAD
D8 - A CLUSTER OF (8) TYPE "D" ANCHORS AT HEAD
E4 - A CLUSTER OF (4) TYPE "E" ANCHORS AT HEAD
E6 - A CLUSTER OF (6) TYPE "E" ANCHORS AT HEAD

FOR ANCHOR TYPES & LAYOUT, SEE SHEET A6

YIYING WANG P.E.
FLORIDA REGISTRATION
LIC. #55983
C.A.N. 28677
STATE OF FLORIDA
PROFESSIONAL ENGINEER
No 55983
October 23rd, 2024

MCY ENGINEERING, INC.
GLAZING CONSULTANTS
12781 MIRAMAR PARKWAY #301
MIRAMAR, FL. 33027 P: 305.271.0117
www.MCYEngineering.com mcy@mcyengineering.com

ES-SGD2020 SLIDING GLASS DOOR (LMI & SMI)

ES WINDOWS, INC.
10653 NE Quaybridge Ct.
Miami, FL 33138
TEL. (305) 624-7775

Rev. No.	Date	Drawn By	REVISION	Description
RJ	10.08.2024	James		

Drawn Date 10.08.2024
Scale

DRAWING NO.
AD16-29

A4

Sheet No.
24 OF 59

SILL ANCHOR CAPACITY - PSF

SGD PANEL SIZES		ANCHOR TYPE "A" / "B"		
AVE. PANEL WIDTH (IN)	DOOR HEIGHT (IN)	A4 / B4 +/-	A6 / B6 +/-	A8 / B8 +/-
36	84	150.0	150.0	150.0
42		150.0	150.0	150.0
48		146.8	150.0	150.0
54		137.4	150.0	150.0
60		130.5	150.0	150.0
66		125.6	150.0	150.0
72		122.3	150.0	150.0
78		120.5	150.0	150.0
84		119.8	150.0	150.0
36	90	150.0	150.0	150.0
42		145.9	150.0	150.0
48		133.5	150.0	150.0
54		124.3	150.0	150.0
60		117.4	150.0	150.0
66		112.4	150.0	150.0
72		108.7	150.0	150.0
78		106.3	150.0	150.0
84		104.9	150.0	150.0
36	96	150.0	150.0	150.0
42		134.2	150.0	150.0
48		122.3	150.0	150.0
54		113.5	150.0	150.0
60		106.8	150.0	150.0
66		101.7	150.0	150.0
72		97.9	146.8	150.0
78		95.1	142.6	150.0
84		93.2	139.8	150.0
36	102	139.8	150.0	150.0
42		124.3	150.0	150.0
48		112.9	150.0	150.0
54		104.4	150.0	150.0
60		97.9	146.8	150.0
66		92.8	139.3	150.0
72		89.0	133.5	150.0
78		86.0	129.1	150.0
84		83.9	125.8	150.0
36	108	130.5	150.0	150.0
42		115.7	150.0	150.0
48		104.9	150.0	150.0
54		96.7	145.0	150.0
60		90.3	135.5	150.0
66		85.4	128.1	150.0
72		81.6	122.3	150.0
78		78.6	117.8	150.0

SILL ANCHOR CAPACITY - PSF

SGD PANEL SIZES		ANCHOR TYPE "A" / "B"		
AVE. PANEL WIDTH (IN)	DOOR HEIGHT (IN)	A4 / B4 +/-	A6 / B6 +/-	A8 / B8 +/-
36	114	122.3	150.0	150.0
42		108.2	150.0	150.0
48		97.9	146.8	150.0
54		90.0	135.0	150.0
60		83.9	125.8	150.0
66		79.1	118.6	150.0
72		75.3	112.9	150.0
36	120	115.1	150.0	150.0
42		101.7	150.0	150.0
48		91.8	137.6	150.0
54		84.2	126.3	150.0
60		78.3	117.4	150.0
66		73.6	110.4	147.3
72		69.9	104.9	139.8
36	126	108.7	150.0	150.0
42		95.9	143.8	150.0
48		86.4	129.5	150.0
54		79.1	118.6	150.0
60		73.4	110.1	146.8
66		68.9	103.3	137.8
66		65.2	97.9	130.5
36	132	103.0	150.0	150.0
42		90.7	136.0	150.0
48		81.6	122.3	150.0
54		74.6	111.8	149.1
60		69.1	103.6	138.2
66		64.7	97.1	129.4
36	138	97.9	146.8	150.0
42		86.0	129.1	150.0
48		77.3	115.9	150.0
54		70.5	105.8	141.1
60		65.2	97.9	130.5
36	144	93.2	139.8	150.0
42		81.8	122.8	150.0
48		73.4	110.1	146.8
54		66.9	100.4	133.8
60		61.8	92.7	123.6

A4 - A CLUSTER OF (4) TYPE "A" ANCHORS AT SILL
A6 - A CLUSTER OF (6) TYPE "A" ANCHORS AT SILL
A8 - A CLUSTER OF (8) TYPE "A" ANCHORS AT SILL
B4 - A CLUSTER OF (4) TYPE "B" ANCHORS AT SILL
B6 - A CLUSTER OF (6) TYPE "B" ANCHORS AT SILL
B8 - A CLUSTER OF (8) TYPE "B" ANCHORS AT SILL

FOR ANCHOR TYPES & LAYOUT, SEE SHEET A8

YIPING WANG P.E.
FLORIDA REGISTRATION
FL #55983
C.A.N. 23877
STATE OF FLORIDA PROFESSIONAL ENGINEER
October 23rd, 2024

MCY ENGINEERING, INC.
GLAZING CONSULTANTS
12781 MIRAMAR PARKWAY #301
MIRAMAR, FL. 33027 P: 305.271.0117
www.MCYEngineering.com mcy@mcyengineering.com

ES-SGD2020 SLIDING GLASS DOOR (LMI & SMI)

ES WINDOWS, INC.
10653 NE Quaybridge Ct.
Miami, FL 33138
TEL. (305) 624-7775

Rev. No.	Date	Drawn By	Description
R5	10.08.2024	James	REVISION

Drawn Date 10.08.2024
Scale

DRAWING NO. AD16–29

A5

Sheet No. 25 OF 59

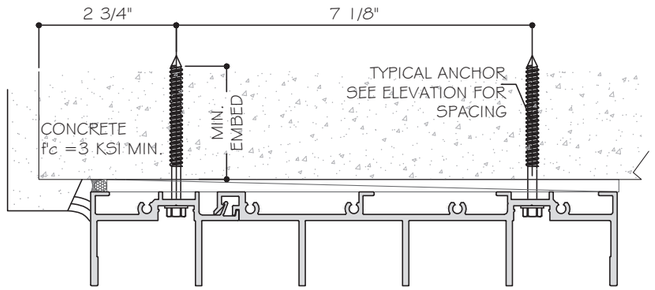

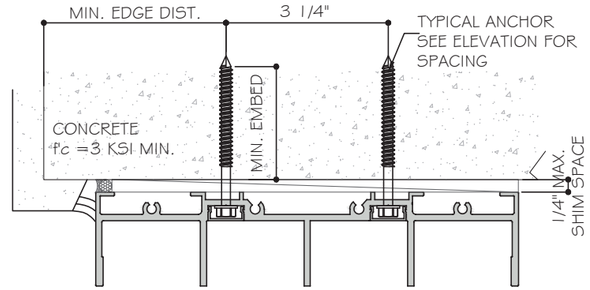

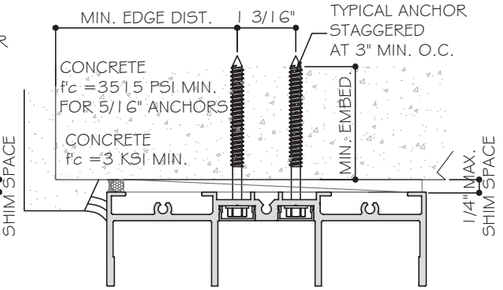

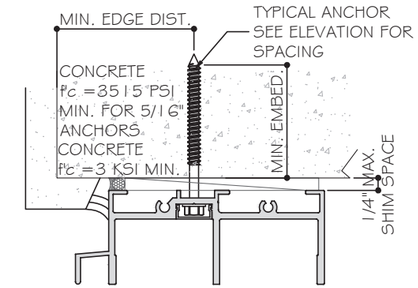

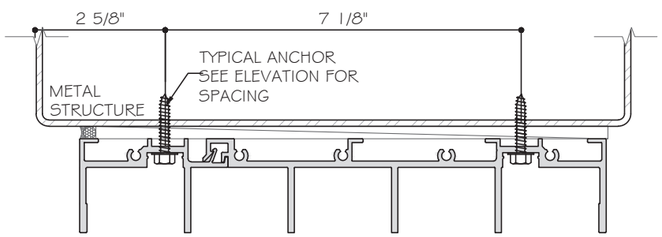

5 TRACK SGD

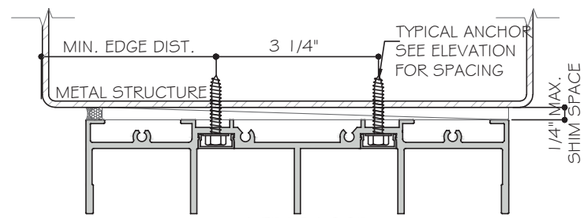

4 TRACK SGD

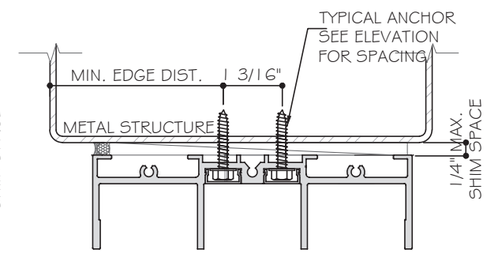

3 TRACK SGD

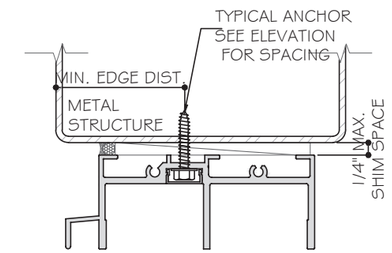

2 TRACK SGD

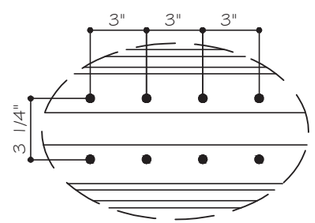

5 TRACK SGD

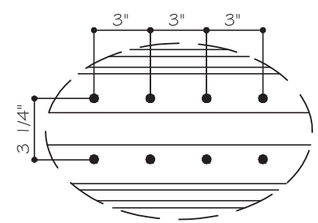

4 TRACK SGD

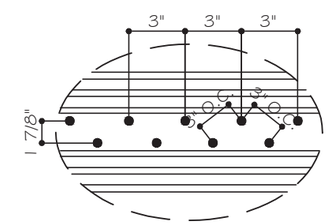

3 TRACK SGD

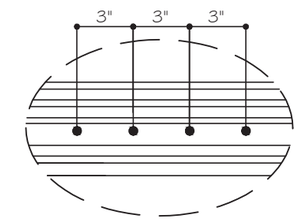

2 TRACK SGD

HEAD ANCHOR TYPES:

TYPE "A": 1/4" DIA. KWIKCON (Fu=138 KSI, Fy=137 KSI)
1 3/4" MIN. EMBED INTO f'c=3 KSI MIN. CONCRETE
2 1/2" MIN. EDGE DISTANCE, 3" MIN. O.C.

TYPE "B": 1/4" DIA. ULTRACON+ BY DEWALT (Fu=164 KSI, Fy=148 KSI)
1 3/4" MIN. EMBED INTO f'c=3 KSI MIN. CONCRETE
2 1/2" MIN. EDGE DISTANCE, 3" MIN. O.C.

TYPE "C": 5/16" DIA. ULTRACON BY DEWALT (Fu=177 KSI, Fy=155 KSI)
1 3/4" MIN. EMBED INTO f'c=3515 PSI MIN. CONCRETE
2 1/2" MIN. EDGE DISTANCE, 3" MIN. O.C.

TYPE "D": 1/4" DIA. TEKS/DRIL-FLEX SCREW GRADE 5 (Fu=120 KSI, Fy=92 KSI)
INTO METAL STRUCTURE
ALUMINUM: 1/8" THK. MIN. (6063-T5 MIN.)
STEEL: 1/8" THK. MIN. (Fy=36KSI, MIN.)

TYPE "E": 5/16" TEKS/DRIL-FLEX SCREW (Fu=120 KSI, Fy=92 KSI)
INTO METAL STRUCTURE
(3) THREAD MIN. PENETRATION BEYOND METAL SUBSTRATE
ALUMINUM: 1/8" THK. MIN. (6063-T5 MIN.)
STEEL: 1/8" THK. MIN. (Fy=36KSI, MIN.)

STEEL IN CONTACT WITH ALUM. TO BE PAINTED.

A4 - A CLUSTER OF (4) TYPE "A" ANCHORS AT HEAD
A6 - A CLUSTER OF (6) TYPE "A" ANCHORS AT HEAD
A8 - A CLUSTER OF (8) TYPE "A" ANCHORS AT HEAD
A10 - A CLUSTER OF (10) TYPE "A" ANCHORS AT HEAD
B4 - A CLUSTER OF (4) TYPE "B" ANCHORS AT HEAD
B6 - A CLUSTER OF (6) TYPE "B" ANCHORS AT HEAD
B8 - A CLUSTER OF (8) TYPE "B" ANCHORS AT HEAD

C4 - A CLUSTER OF (4) TYPE "C" ANCHORS AT HEAD
C6 - A CLUSTER OF (6) TYPE "C" ANCHORS AT HEAD
D4 - A CLUSTER OF (4) TYPE "D" ANCHORS AT HEAD
D6 - A CLUSTER OF (6) TYPE "D" ANCHORS AT HEAD
D8 - A CLUSTER OF (8) TYPE "D" ANCHORS AT HEAD
E4 - A CLUSTER OF (4) TYPE "E" ANCHORS AT HEAD
E6 - A CLUSTER OF (6) TYPE "E" ANCHORS AT HEAD

NOTE:
WOOD BUCKS/ METAL STRUCTURES BY OTHERS MUST BE PROPERLY SECURED TO SUPPORT LOADS IMPOSED BY GLAZING SYSTEM AND TRANSFER THEM TO THE BUILDING STRUCTURES.

YIJING WANG, P.E.
LICENSE
FLORIDA REGISTRATION
No 55983
C.A.N. 28677
STATE OF FLORIDA
PROFESSIONAL ENGINEER
October 23rd, 2024

MCY ENGINEERING, INC.
GLAZING CONSULTANTS
12781 MIRAMAR PARKWAY #301
MIRAMAR, FL. 33027 P: 305.271.0117
www.MCYEngineering.com mcy@mcyengineering.com

ES-SGD2020 SLIDING GLASS DOOR (LMI & SMI)

ES WINDOWS, INC.
10653 NE Quayibridge Ct.
Miami, FL 33138
TEL. (305) 624-7775

Rev. No.	Date	Drawn By	REVISION	Description
R5	10.08.2024	James		

Drawn Date 10.08.2024
Scale

DRAWING NO.
AD16-29

A6

Sheet No.
26 OF 59

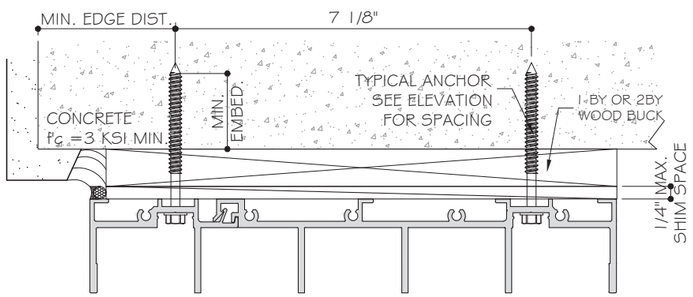

5 TRACK SGD

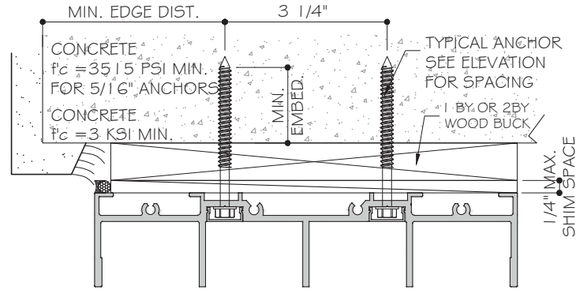

4 TRACK SGD

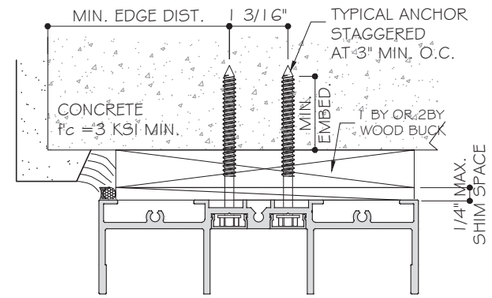

3 TRACK SGD

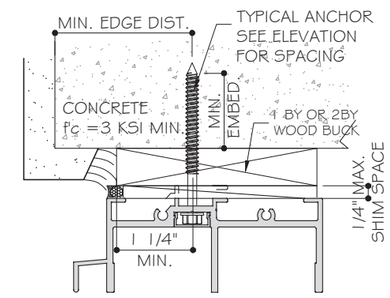

2 TRACK SGD

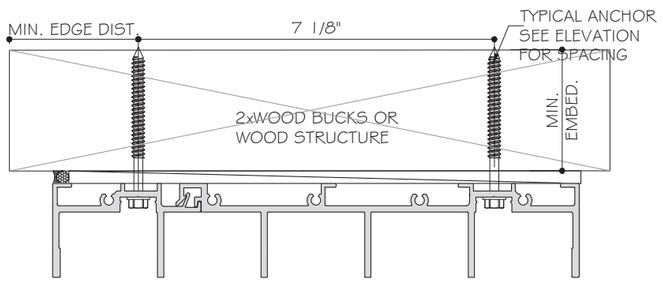

5 TRACK SGD

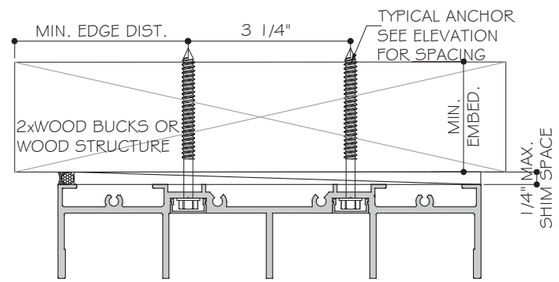

4 TRACK SGD

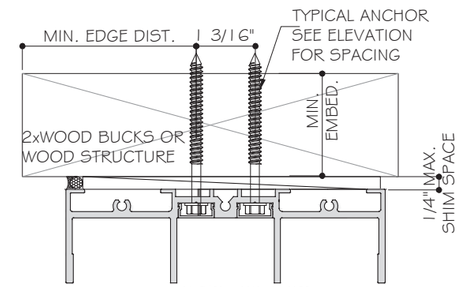

3 TRACK SGD

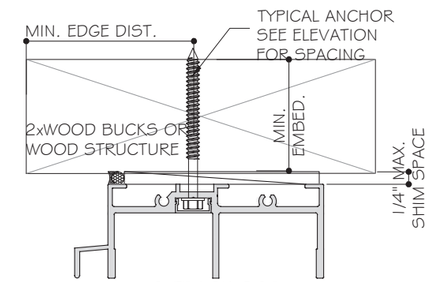

2 TRACK SGD

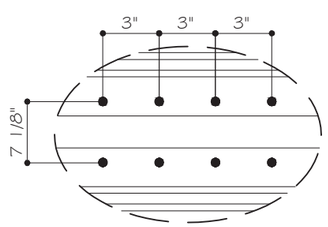

5 TRACK SGD

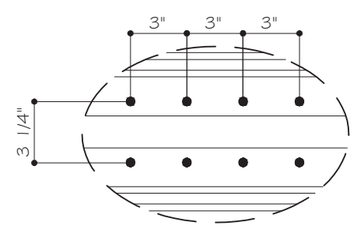

4 TRACK SGD

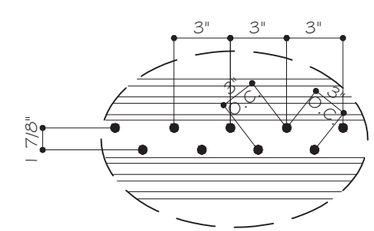

3 TRACK SGD

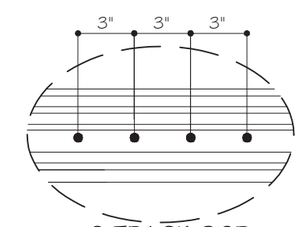

2 TRACK SGD

HEAD ANCHOR TYPES:

TYPE "AA": 1/4" DIA. KWIKCON (Fu=138 KSI, Fy=137 KSI)
1 1/2" MIN. EMBED INTO 2XWOOD BUCKS OR WOOD STRUCTURE
SG=0.55 MIN.
OR THRU 1BY OR 2BY WOOD BUCK WITH 1 3/4" MIN. EMBED
INTO f'c=3000 PSI CONCRETE
2 1/2" MIN. EDGE DISTANCE, 3" MIN. O.C.

TYPE "BB": 1/4" DIA. ULTRACON+ BY DEWALT (Fu=164 KSI, Fy=148 KSI)
1 1/2" MIN. EMBED INTO 2XWOOD BUCKS OR WOOD STRUCTURE
SG=0.55 MIN.
OR THRU 1BY OR 2BY WOOD BUCK WITH 1 3/4" MIN. EMBED
INTO f'c=3000 PSI CONCRETE
2 1/2" MIN. EDGE DISTANCE, 3" MIN. O.C.

TYPE "CC": 5/16" DIA. ULTRACON BY DEWALT (Fu=177 KSI, Fy=155 KSI)
1 1/2" MIN. EMBED INTO 2XWOOD BUCKS OR WOOD STRUCTURE
SG=0.55 MIN.
OR THRU 1BY OR 2BY WOOD BUCK WITH 1 3/4" MIN. EMBED
INTO f'c=3515 PSI CONCRETE
2 1/2" MIN. EDGE DISTANCE, 3" MIN. O.C.

AA4 - A CLUSTER OF (4) TYPE "AA" ANCHORS AT HEAD
AA6 - A CLUSTER OF (6) TYPE "AA" ANCHORS AT HEAD
AA8 - A CLUSTER OF (8) TYPE "AA" ANCHORS AT HEAD
AA10 - A CLUSTER OF (10) TYPE "AA" ANCHORS AT HEAD
BB4 - A CLUSTER OF (4) TYPE "BB" ANCHORS AT HEAD
BB6 - A CLUSTER OF (6) TYPE "BB" ANCHORS AT HEAD
BB8 - A CLUSTER OF (8) TYPE "BB" ANCHORS AT HEAD
BB10 - A CLUSTER OF (10) TYPE "BB" ANCHORS AT HEAD
CC4 - A CLUSTER OF (4) TYPE "CC" ANCHORS AT HEAD
CC6 - A CLUSTER OF (6) TYPE "CC" ANCHORS AT HEAD
CC8 - A CLUSTER OF (8) TYPE "CC" ANCHORS AT HEAD
CC10 - A CLUSTER OF (10) TYPE "CC" ANCHORS AT HEAD

NOTE:
WOOD BUCKS/ METAL STRUCTURES BY OTHERS MUST BE PROPERLY SECURED TO SUPPORT LOADS IMPOSED BY GLAZING SYSTEM AND TRANSFER THEM TO THE BUILDING STRUCTURES.

YIPING WANG
LICENSE
No 55983
STATE OF FLORIDA
PROFESSIONAL ENGINEER
C.A.N. 0000277
October 23rd, 2024

MCY ENGINEERING, INC.
GLAZING CONSULTANTS
12781 MIRAMAR PARKWAY #301
MIRAMAR, FL. 33027
P: 305.271.0117
www.MCYEngineering.com mcy@mcyengineering.com

ES-SGD2020 SLIDING GLASS DOOR (LMI & SMI)

ES WINDOWS, INC.
10653 NE Quaybridge Ct.
Miami, FL 33138
TEL. (305) 624-7775

Rev. No.	Date	Drawn By	REVISION	Description
RJ	10.08.2024	James		

Drawn Date	Scale
10.08.2024	

DRAWING NO.
AD16-29

A7

Sheet No.
27 OF 59

SILL ANCHOR TYPES:

TYPE "A": 1/4" DIA. KWIKCON (Fu=138 KSI, Fy=137 KSI)
1 3/4" MIN. EMBED INTO f'c=3 KSI MIN. CONCRETE
2 1/2" MIN. EDGE DISTANCE, 3" MIN. O.C.

TYPE "B": 1/4" DIA. ULTRACON+ (Fu=164 KSI, Fy=148 KSI)
1 3/4" MIN. EMBED INTO f'c=3 KSI MIN. CONCRETE
2 1/2" MIN. EDGE DISTANCE, 3" MIN. O.C.

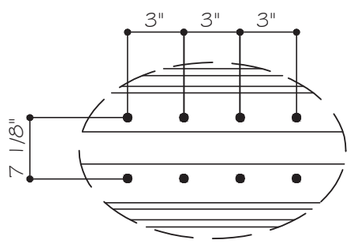

5 TRACK SGD

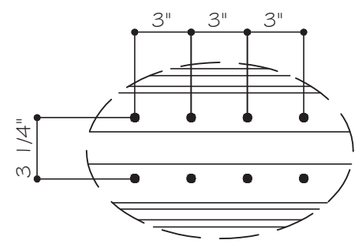

4 TRACK SGD

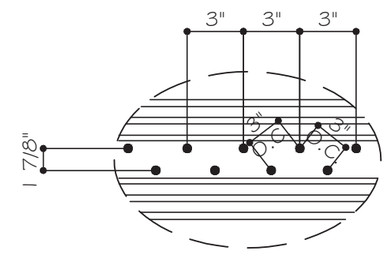

3 TRACK SGD

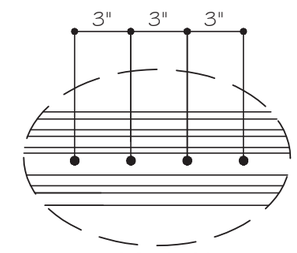

2 TRACK SGD

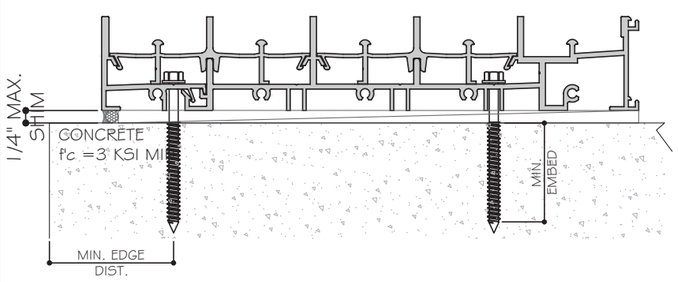

5 TRACK SGD

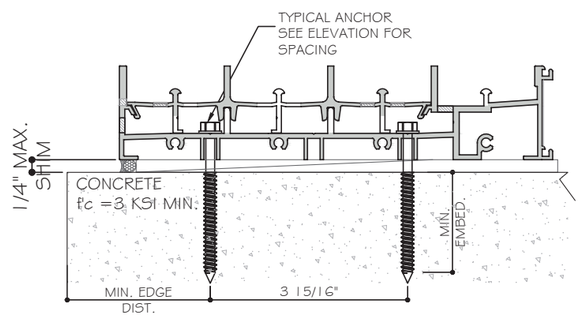

4 TRACK SGD

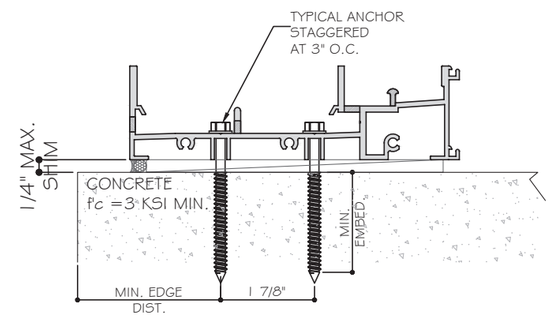

3 TRACK SGD

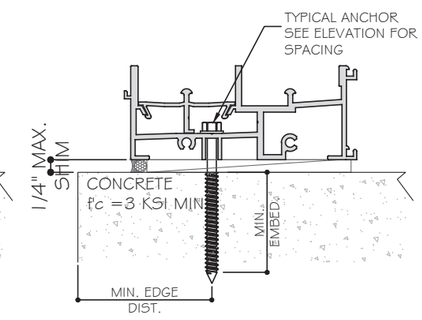

2 TRACK SGD

YIPING WANG, P.E.
FLORIDA REGISTRATION
No #55983
C.A.N. 0000677
STATE OF FLORIDA
PROFESSIONAL ENGINEER
October 23rd, 2024

MCY ENGINEERING, INC.
GLAZING CONSULTANTS
12781 MIRAMAR PARKWAY #301
MIRAMAR, FL. 33027 P: 305.271.0117
www.MCYEngineering.com mcy@mcyengineering.com

ES-SGD2020 SLIDING GLASS DOOR (LMI & SMI)

ES WINDOWS, INC.
10653 NE Quaybridge Ct.
Miami, FL 33138
TEL. (305) 624-7775

Rev. No.	Date	Drawn By	Description
R.0	10.08.2024	James	REVISION

Drawn Date 10.08.2024
Scale

DRAWING NO.
AD16-29

A8

Sheet No.
28 OF 59

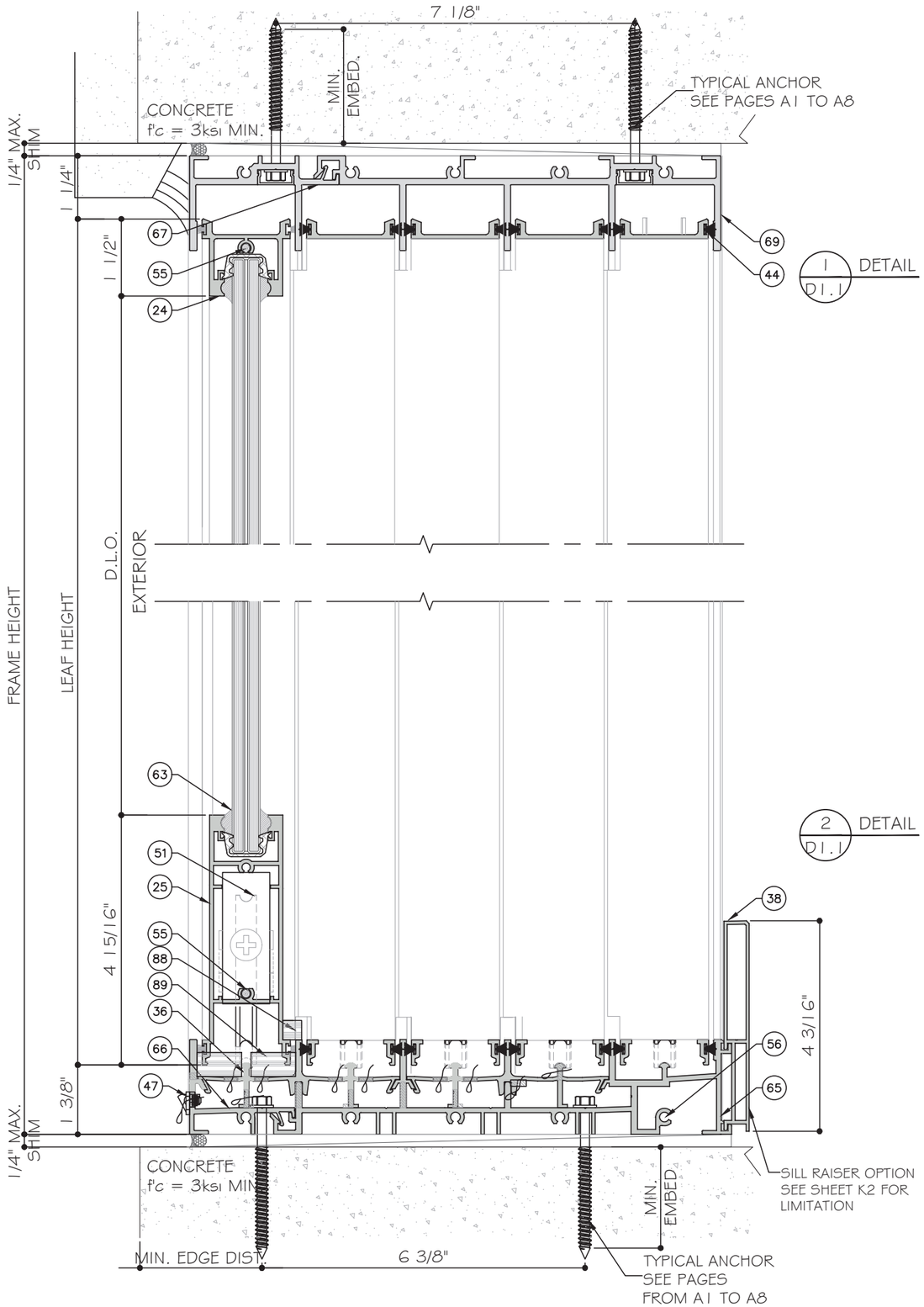

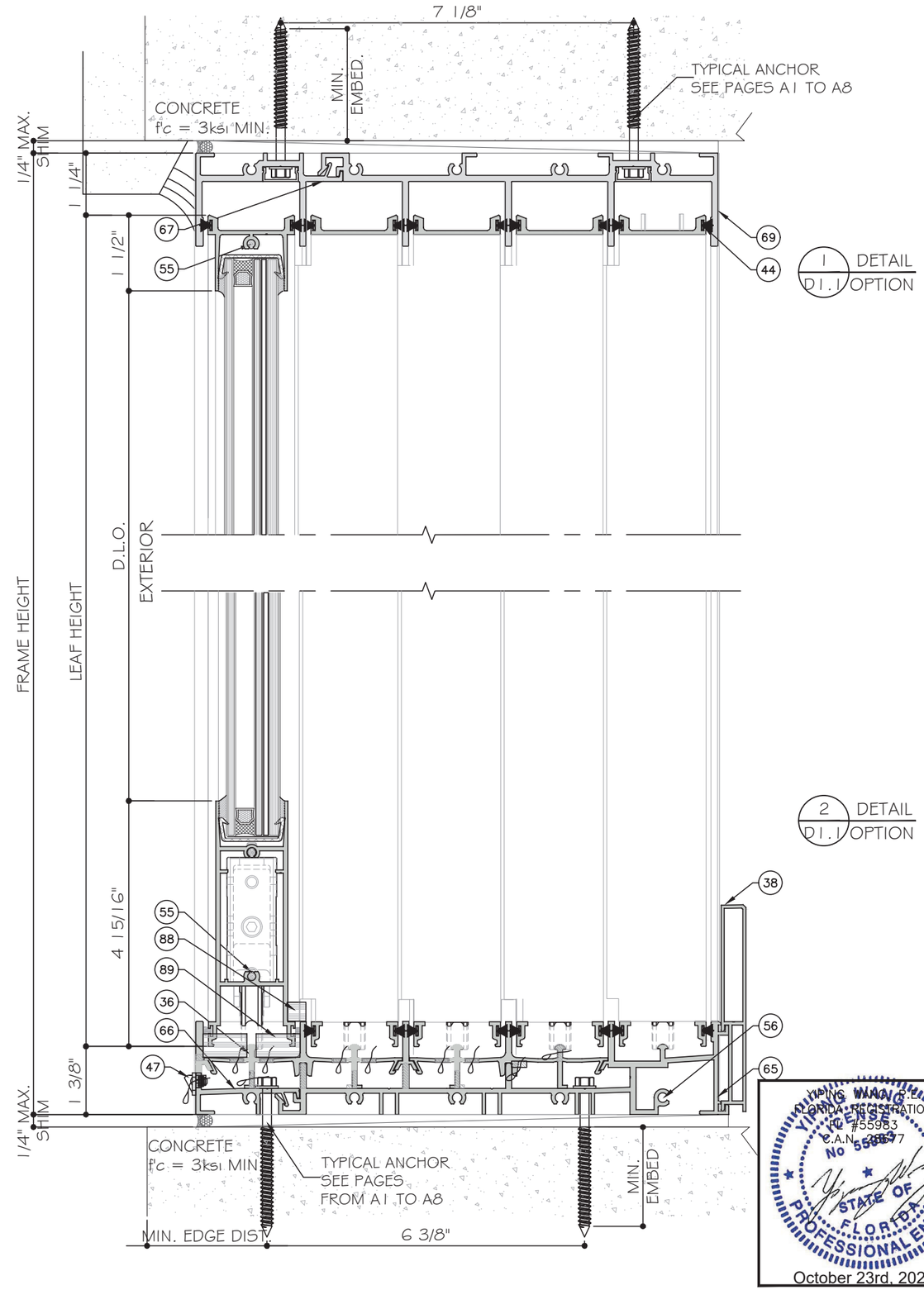

YIANG WANG P.E.
FLORIDA REGISTRATION
PE #55983
C.A.N. 28677
STATE OF FLORIDA
PROFESSIONAL ENGINEER
October 23rd, 2024

MCY ENGINEERING, INC.
GLAZING CONSULTANTS
12781 MIRAMAR PARKWAY #301
MIRAMAR, FL. 33027 P: 305.271.0117
www.MCYEngineering.com mcy@mcyengineering.com

ES-SGD2020 SLIDING GLASS DOOR (LMI & SMI)

ES WINDOWS, INC.
10653 NE Quaybridge Ct.
Miami, FL 33138
TEL. (305) 624-7775

Rev. No.	Date	Drawn By	REVISION	Description
R5	10.08.2024	James		

Drawn Date	Scale
10.08.2024	

DRAWING NO.
AD16–29

D1.1

Sheet No.
29 OF 59

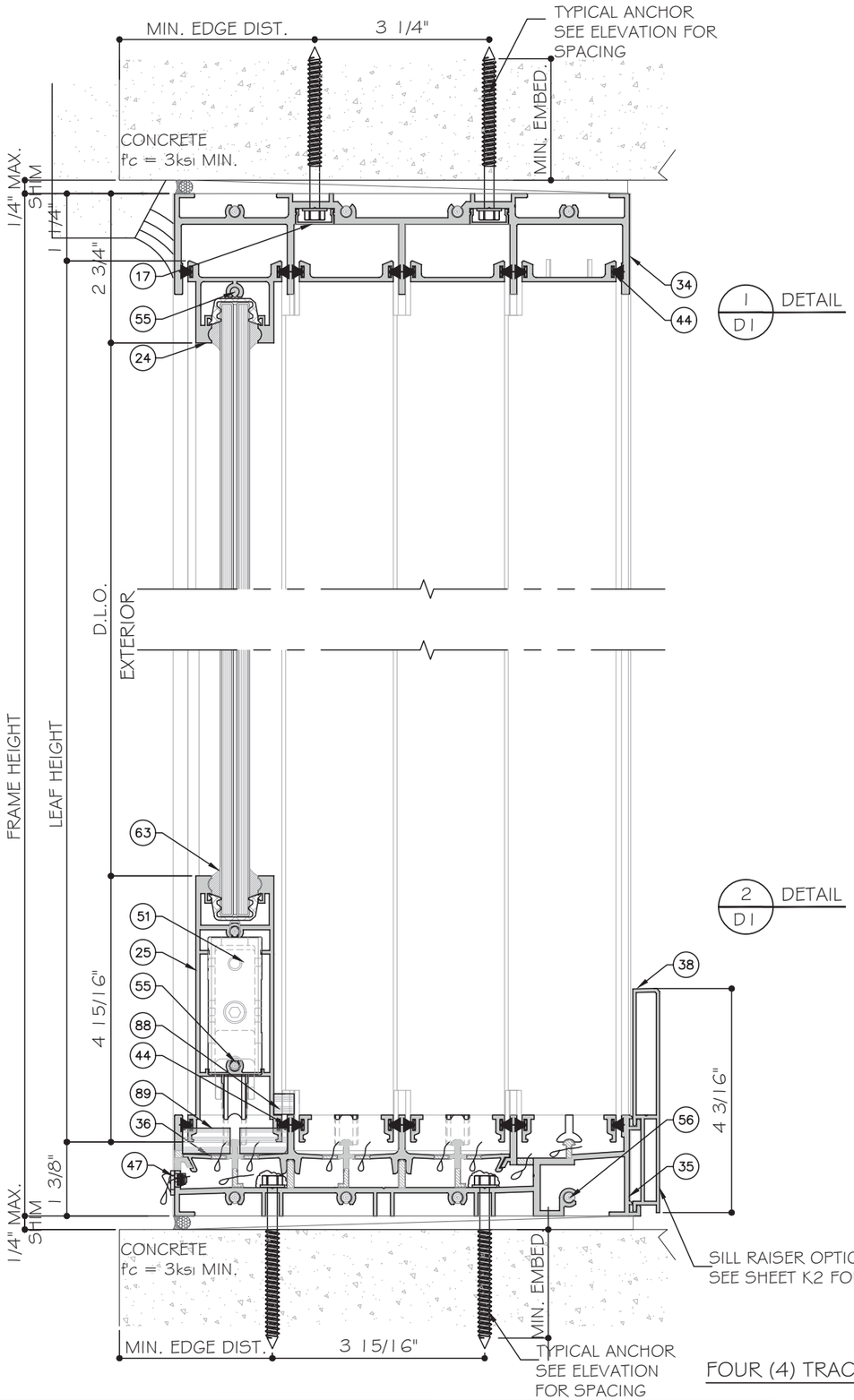

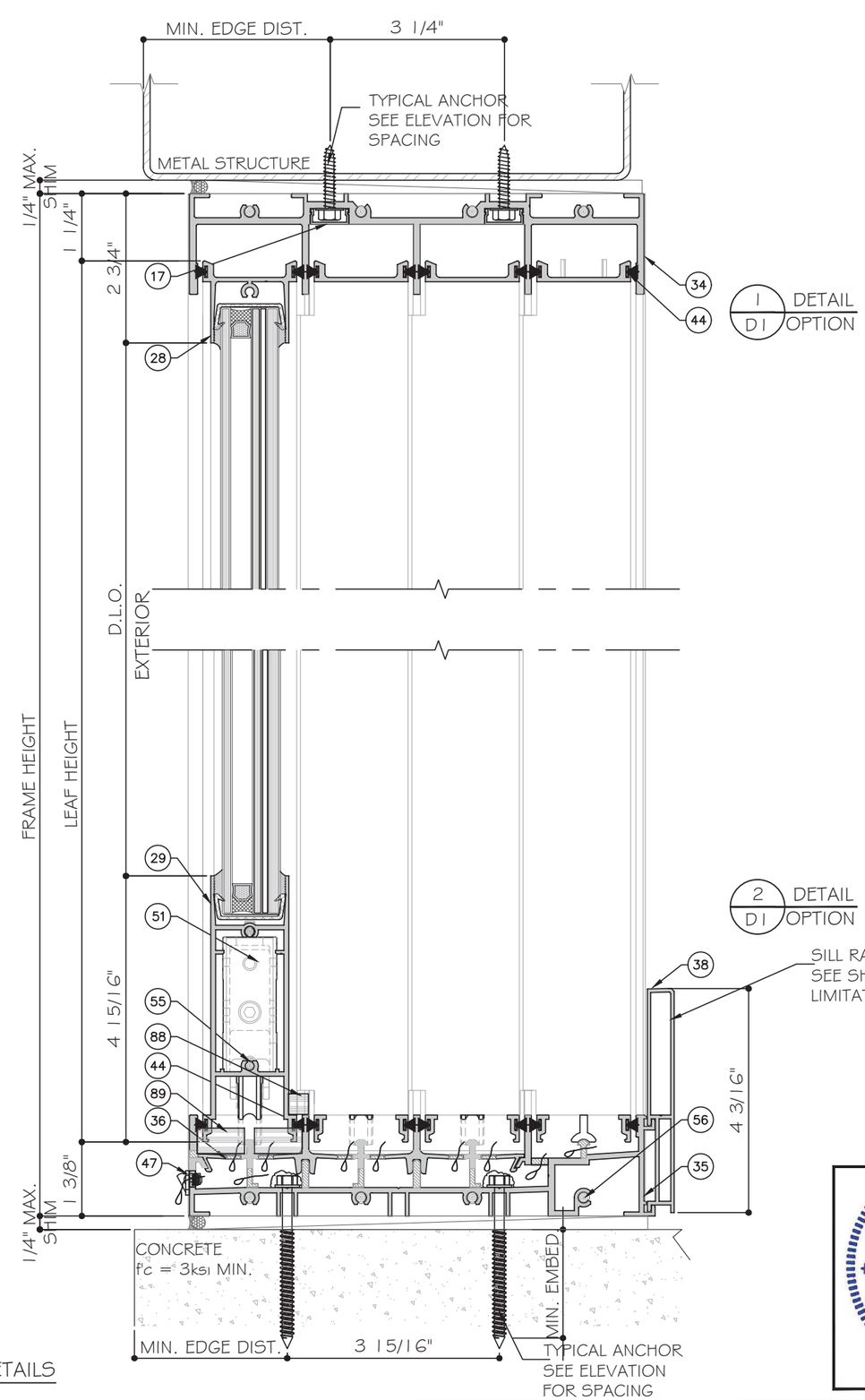

FOUR (4) TRACK DOOR DETAILS

YIMING WANG
STATE OF FLORIDA
PROFESSIONAL ENGINEER
No 55983
FLORIDA REGISTRATION
C.A.N. 28677
October 23rd, 2024

MCY ENGINEERING, INC.
GLAZING CONSULTANTS
12781 MIRAMAR PARKWAY #301
MIRAMAR, FL. 33027
P: 305.271.0117
www.MCYEngineering.com mcy@mcyengineering.com

ES-SGD2020 SLIDING GLASS DOOR (LMI & SMI)

ES WINDOWS, INC.
10653 NE Quaybridge Ct.
Miami, FL 33138
TEL. (305) 624-7775

Rev. No.	Date	Drawn By	Description
R5	10.08.2024	James	REVISION

Drawn Date	Scale
10.08.2024	

DRAWING NO.
AD16–29

D1

Sheet No.
30 OF 59

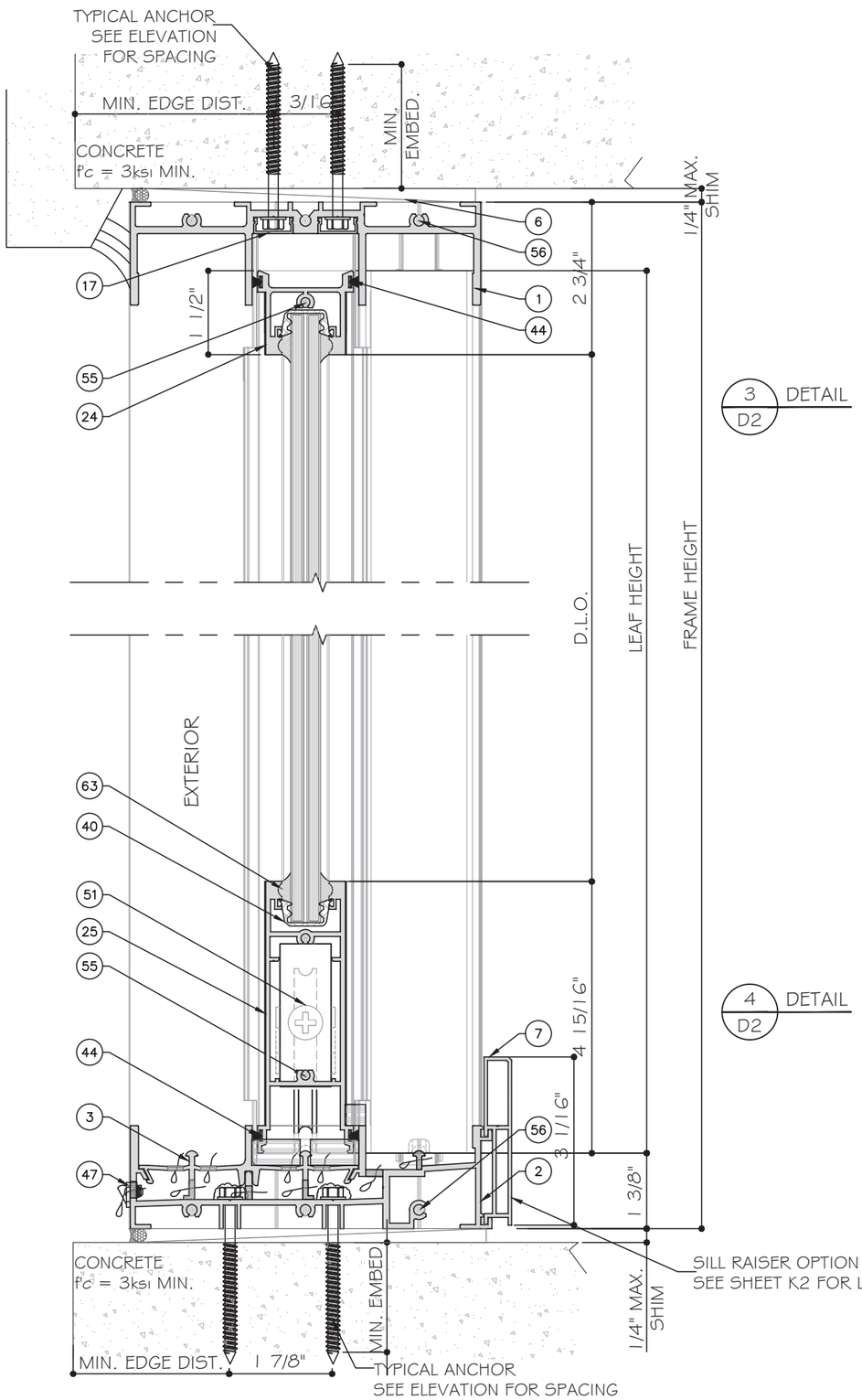

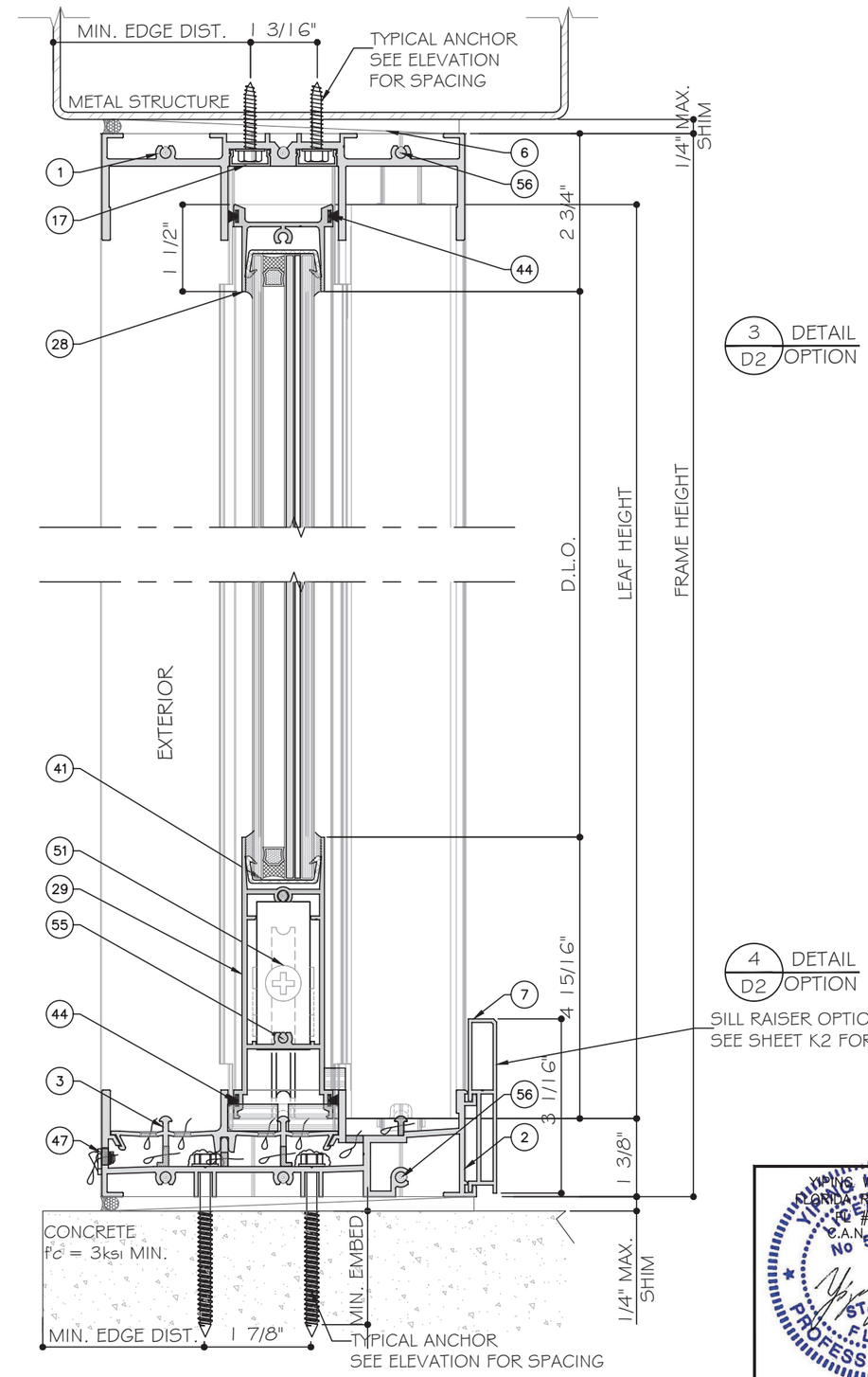

THREE (3) TRACK DOOR DETAILS

YIMING WANG P.E.
FLORIDA REGISTRATION
PE #55983
C.A.N. 28677
LICENSE No 55983
STATE OF FLORIDA
PROFESSIONAL ENGINEER
October 23rd, 2024

MCY ENGINEERING, INC.
GLAZING CONSULTANTS
12781 MIRAMAR PARKWAY #301
MIRAMAR, FL. 33027
P: 305.271.0117
www.MCYEngineering.com mcy@mcyengineering.com

ES-SGD2020 SLIDING GLASS DOOR (LMI & SMI)

ES WINDOWS, INC.
10653 NE Quaybridge Ct.
Miami, FL 33138
TEL. (305) 624-7775

Rev. No.	Date	Drawn By	Description
R5	10.08.2024	James	REVISION

Drawn Date 10.08.2024

Scale

DRAWING NO.
AD16–29

D2

Sheet No.
31 OF 59

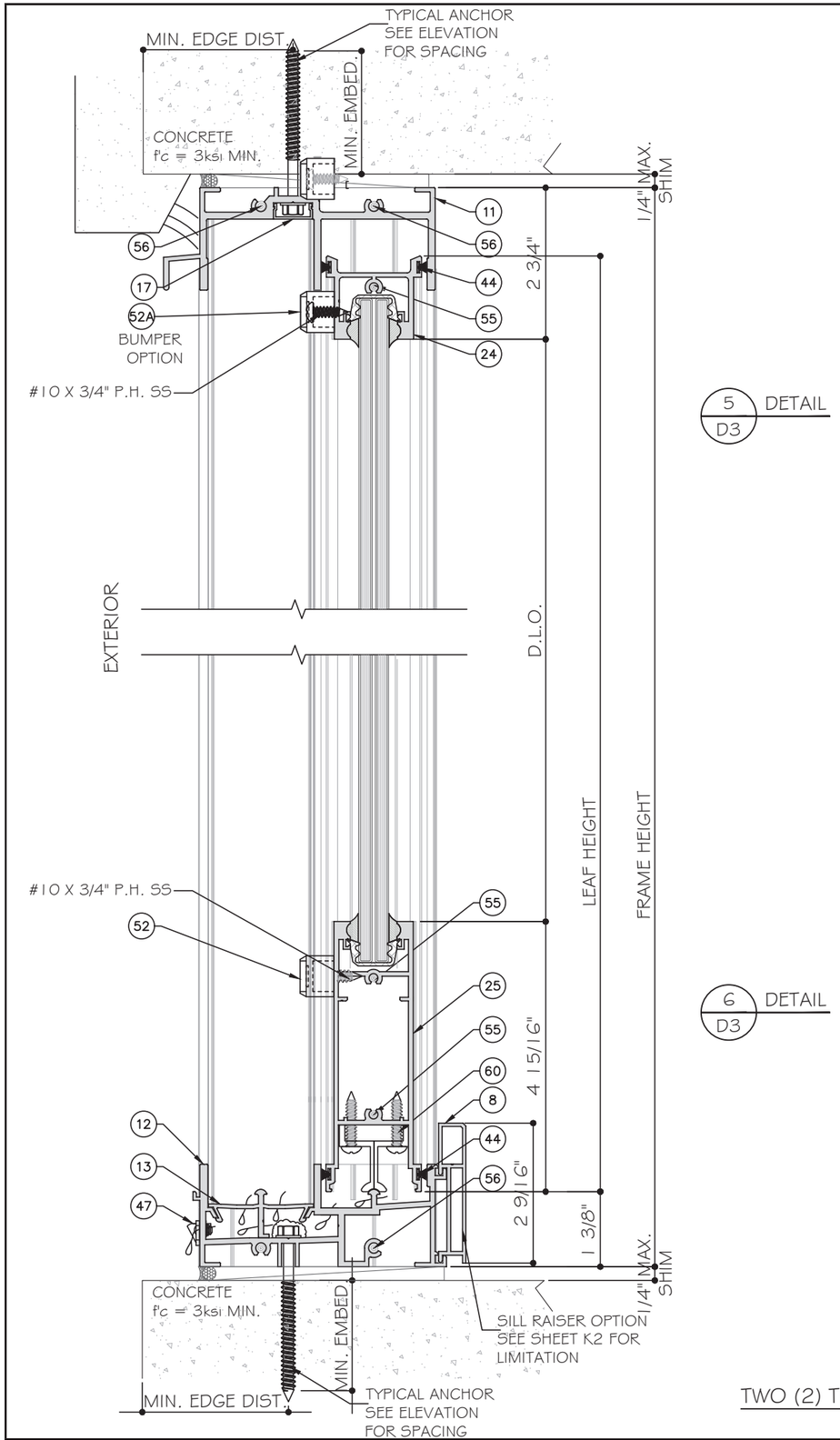

5 / D3 DETAIL

6 / D3 DETAIL

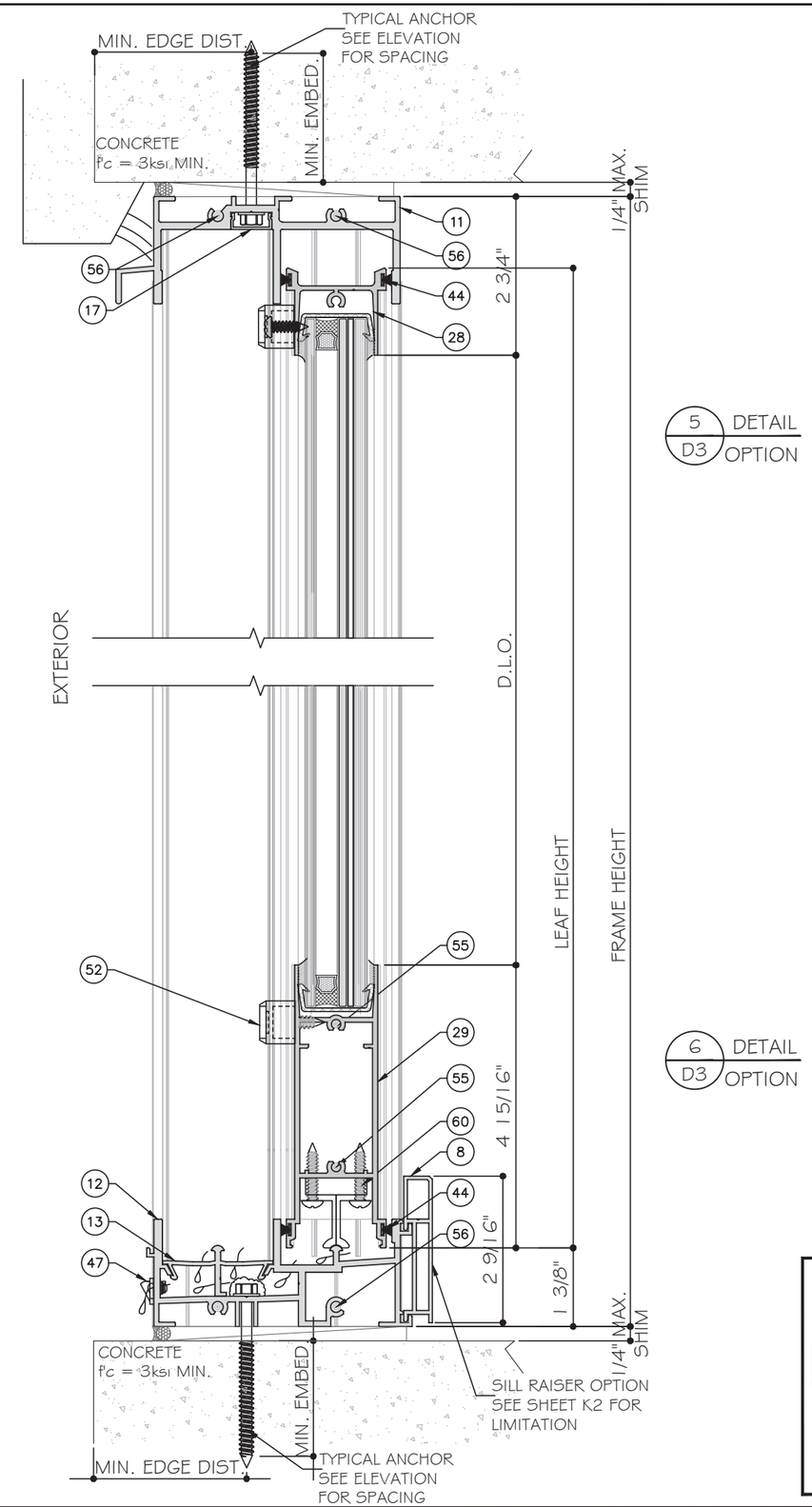

5 / D3 DETAIL OPTION

6 / D3 DETAIL OPTION

TWO (2) TRACK DOOR DETAILS

MCY ENGINEERING, INC.
GLAZING CONSULTANTS
12781 MIRAMAR PARKWAY #301
MIRAMAR, FL. 33027 P: 305.271.0117
www.MCYEngineering.com mcy@mcyengineering.com

ES-SGD2020 SLIDING GLASS DOOR (LMI & SMI)

ES WINDOWS, INC.
10653 NE Quaybridge Ct.
Miami, FL 33138
TEL. (305) 624-7775

Rev. No.	Date	Drawn By	Description
R5	10.08.2024	James	REVISION

Drawn Date 10.08.2024

Scale

DRAWING NO. AD16–29

D3

Sheet No. 32 OF 59

YIPING WANG P.E.
FLORIDA REGISTRATION
FL #55983
C.A.N. 6387
STATE OF FLORIDA PROFESSIONAL ENGINEER
No 55983
October 23rd, 2024

STANDARD INTERLOCK (LEVEL 1 OPTION 1) SHOWN.
SEE SHEET K1 FOR LEVEL 2 AND 3 REINFORCEMENT.

LOCK STILE OPTION 1 SHOWN. SEE SHEET E5 FOR OPTION 2.

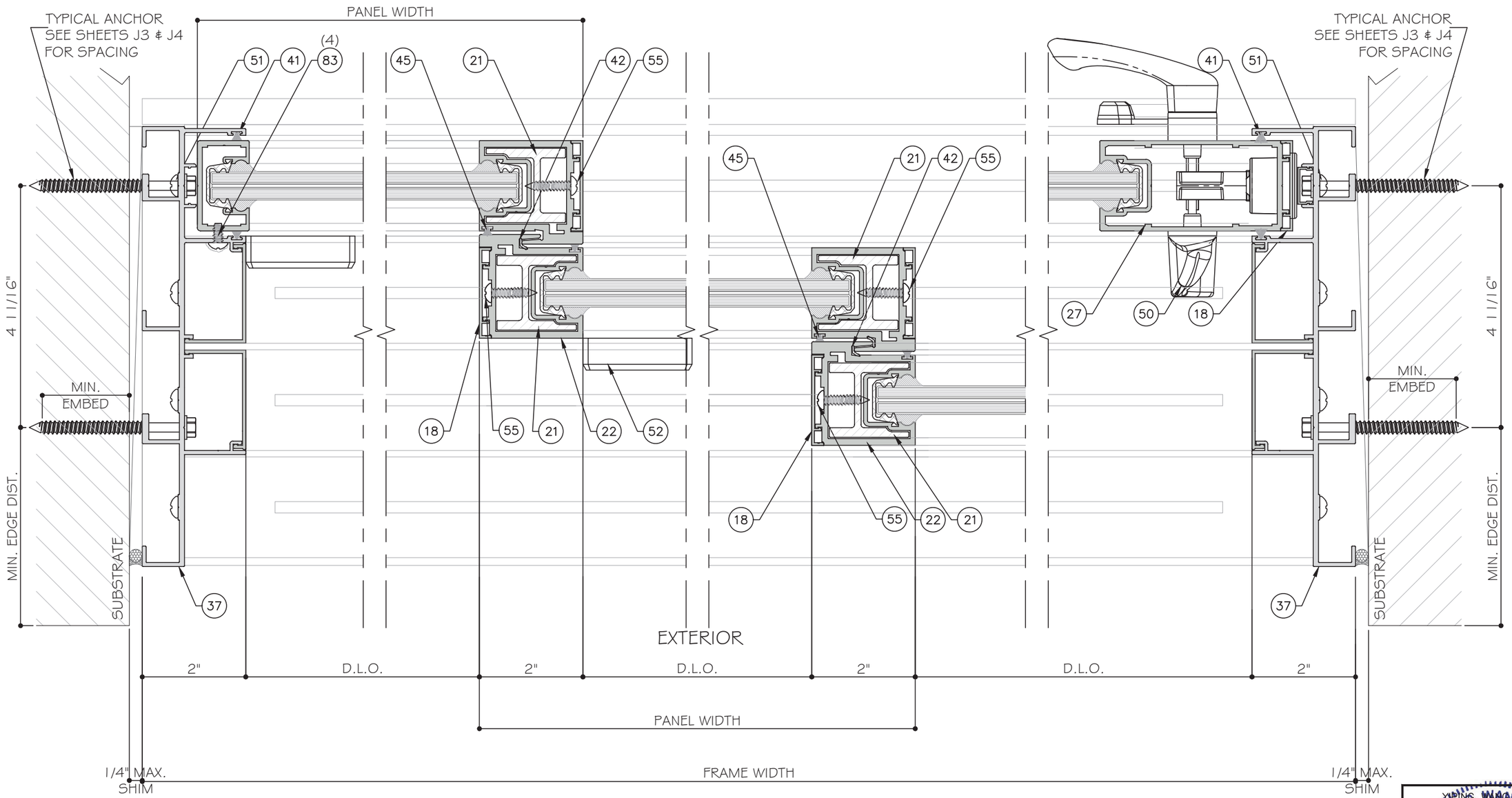

7 / D4 DETAIL

8 / D4 DETAIL

9 / D4 DETAIL

7A / D4 DETAIL

FOUR (4) TRACK DOOR DETAILS

YIYING WANG
LICENSE
FLORIDA REGISTRATION
FE #55983
C.A.N. 28577
No 55983
STATE OF FLORIDA
PROFESSIONAL ENGINEER
October 23rd, 2024

MCY ENGINEERING, INC.
GLAZING CONSULTANTS
12781 MIRAMAR PARKWAY #301
MIRAMAR, FL. 33027 P: 305.271.0117
www.MCYEngineering.com mcy@mcyengineering.com

ES-SGD2020 SLIDING GLASS DOOR (LMI & SMI)

ES WINDOWS, INC.
10653 NE Quaybridge Ct.
Miami, FL 33138
TEL. (305) 624-7775

Rev. No.	Date	Drawn By	REVISION	Description
RB	10.08.2024	James		

Drawn Date 10.08.2024

Scale

DRAWING NO. AD16–29

D4

Sheet No. 33 OF 59

STANDARD INTERLOCK (LEVEL 1 OPTION 1) SHOWN. SEE SHEET K1 FOR LEVEL 2 AND 3 REINFORCEMENT.

LOCK STILE OPTION 1 SHOWN. SEE SHEET E5 FOR OPTION 2.

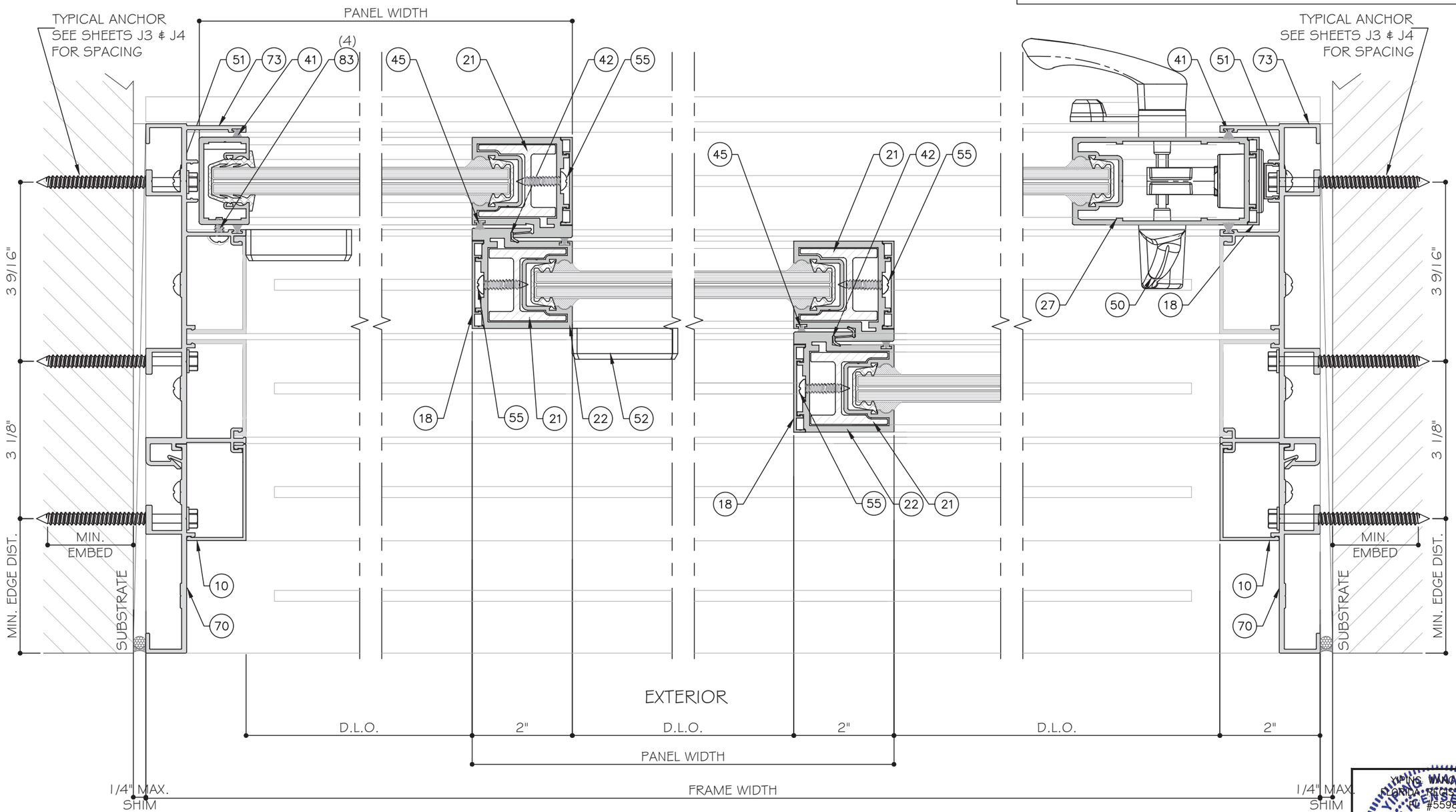

7 / D4.1 DETAIL

8 / D4.1 DETAIL

9 / D4.1 DETAIL

7A / D4.1 DETAIL

FIVE (5) TRACK DOOR DETAILS

YIJING WANG P.E.
FLORIDA REGISTRATION
LICENSE
No. #55983
C.A.N. 28677
STATE OF FLORIDA
PROFESSIONAL ENGINEER
October 23rd, 2024

MCY ENGINEERING, INC.
GLAZING CONSULTANTS
12781 MIRAMAR PARKWAY #301
MIRAMAR, FL. 33027
P: 305.271.0117
www.MCYEngineering.com mcy@mcyengineering.com

ES-SGD2020 SLIDING GLASS DOOR (LMI & SMI)

ES WINDOWS, INC.
10653 NE Quaybridge Ct.
Miami, FL 33138
TEL. (305) 624-7775

Rev. No.	Date	Drawn By	Description
R5	10.08.2024	James	REVISION

Drawn Date 10.08.2024

Scale

DRAWING NO. AD16–29

D4.1

Sheet No. 34 OF 59

STANDARD INTERLOCK (LEVEL 1 OPTION 1) SHOWN. SEE SHEET K1 FOR LEVEL 2 AND 3 REINFORCEMENT.

LOCK STILE OPTION 1 SHOWN. SEE SHEET E5 FOR OPTION 2.

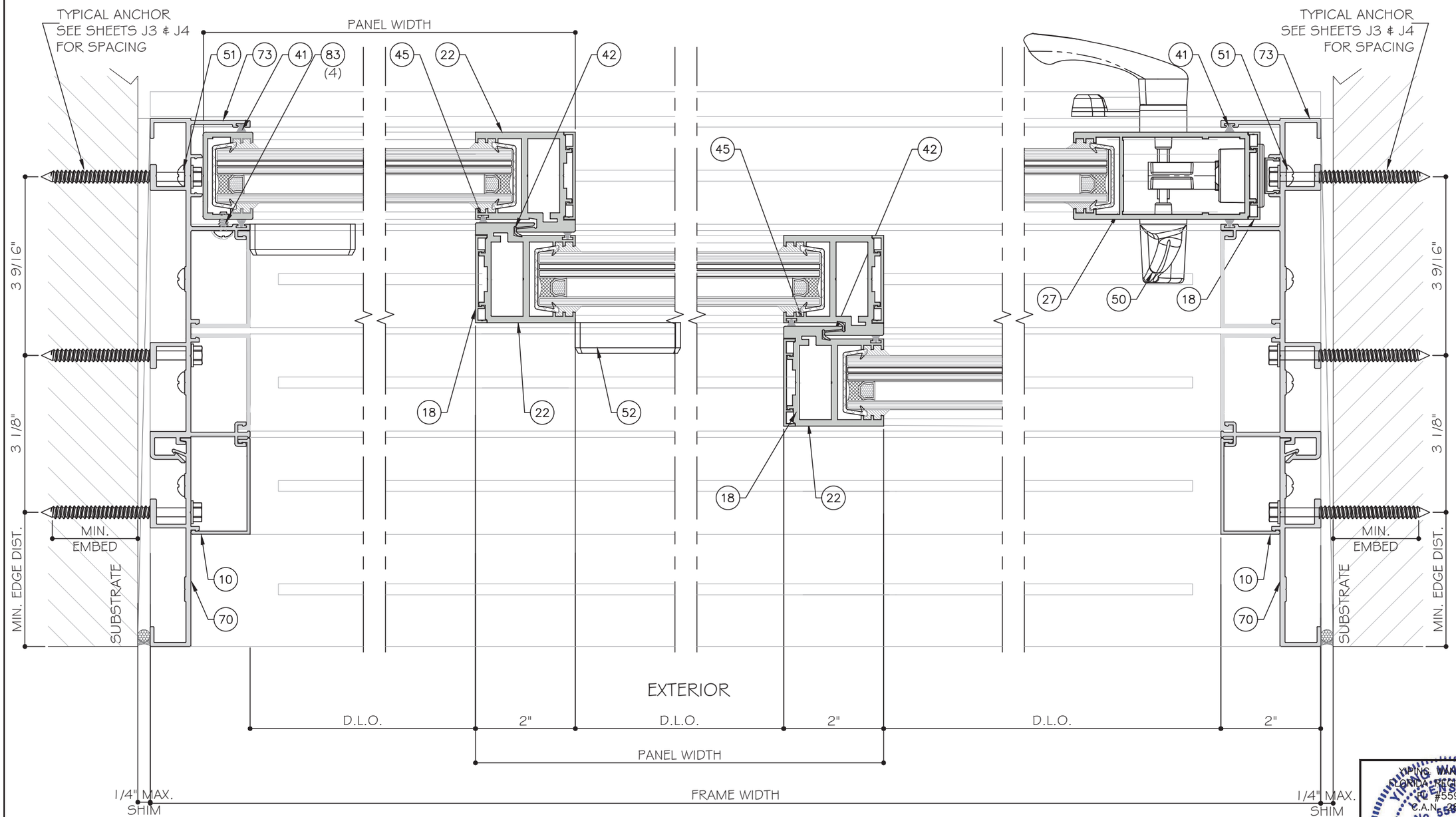

13 / D4.2 DETAIL

14 / D4.2 DETAIL

15 / D4.2 DETAIL

13A / D4.2 DETAIL

FIVE (5) TRACK DOOR DETAILS

YIJING WANG P.E.
FLORIDA REGISTRATION
FL #55983
C.A.N. 28677
STATE OF FLORIDA
PROFESSIONAL ENGINEER
No 55983
October 23rd, 2024

MCY ENGINEERING, INC.
GLAZING CONSULTANTS
12781 MIRAMAR PARKWAY #301
MIRAMAR, FL. 33027 P: 305.271.0117
www.MCYEngineering.com mcy@mcyengineering.com

ES-SGD2020 SLIDING GLASS DOOR (LMI & SMI)

ES WINDOWS, INC.
10653 NE Quaybridge Ct.
Miami, FL 33138
TEL. (305) 624-7775

Rev. No.	Date	Drawn By	REVISION	Description
RJS	10.08.2024	James		

Drawn Date	Scale
10.08.2024	

DRAWING NO.
AD16–29

D4.2

Sheet No.
35 OF 59

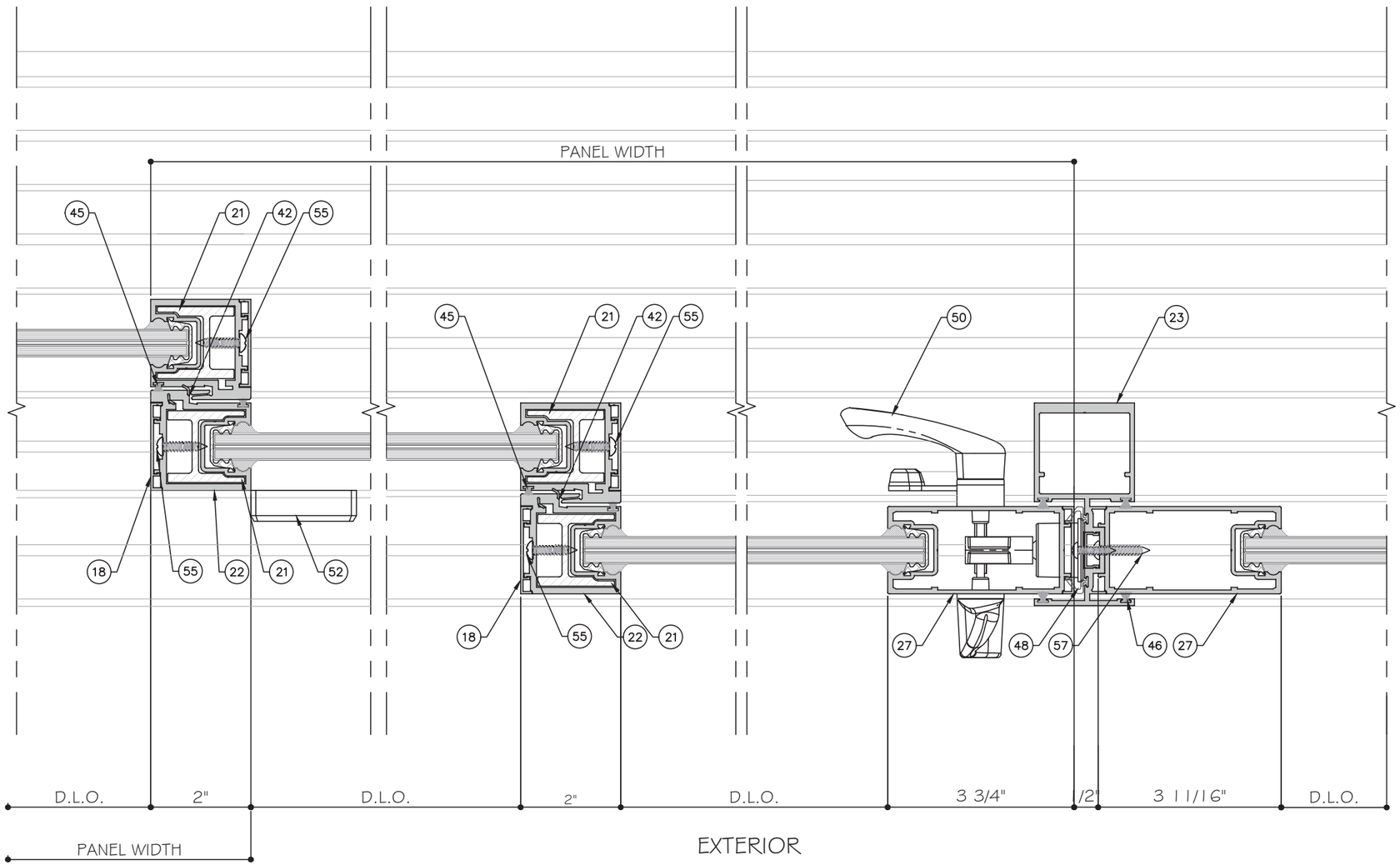

STANDARD INTERLOCK (LEVEL 1 OPTION 1) SHOWN. SEE SHEET K1 FOR LEVEL 2 AND 3 REINFORCEMENT. LOCK STILE OPTION 1 SHOWN. SEE SHEET E5 FOR OPTION 2.

FIVE (5) TRACK DOOR DETAILS

YIMING WANG P.E.
FLORIDA REGISTRATION
LICENSE
#55983
C.A.No. 28677
STATE OF FLORIDA PROFESSIONAL ENGINEER
October 23rd, 2024

MCY ENGINEERING, INC.
GLAZING CONSULTANTS
12781 MIRAMAR PARKWAY #301
MIRAMAR, FL. 33027 P: 305.271.0117
www.MCYEngineering.com mcy@mcyengineering.com

ES-SGD2020 SLIDING GLASS DOOR (LMI & SMI)

ES WINDOWS, INC.
10653 NE Quaybridge Ct.
Miami, FL 33138
TEL. (305) 624-7775

Rev. No.	Date	Drawn By	Description
R.0	10.08.2024	James	REVISION

Drawn Date	Scale
10.08.2024	

DRAWING NO.
AD16–29

D4.3

Sheet No.
36 OF 59

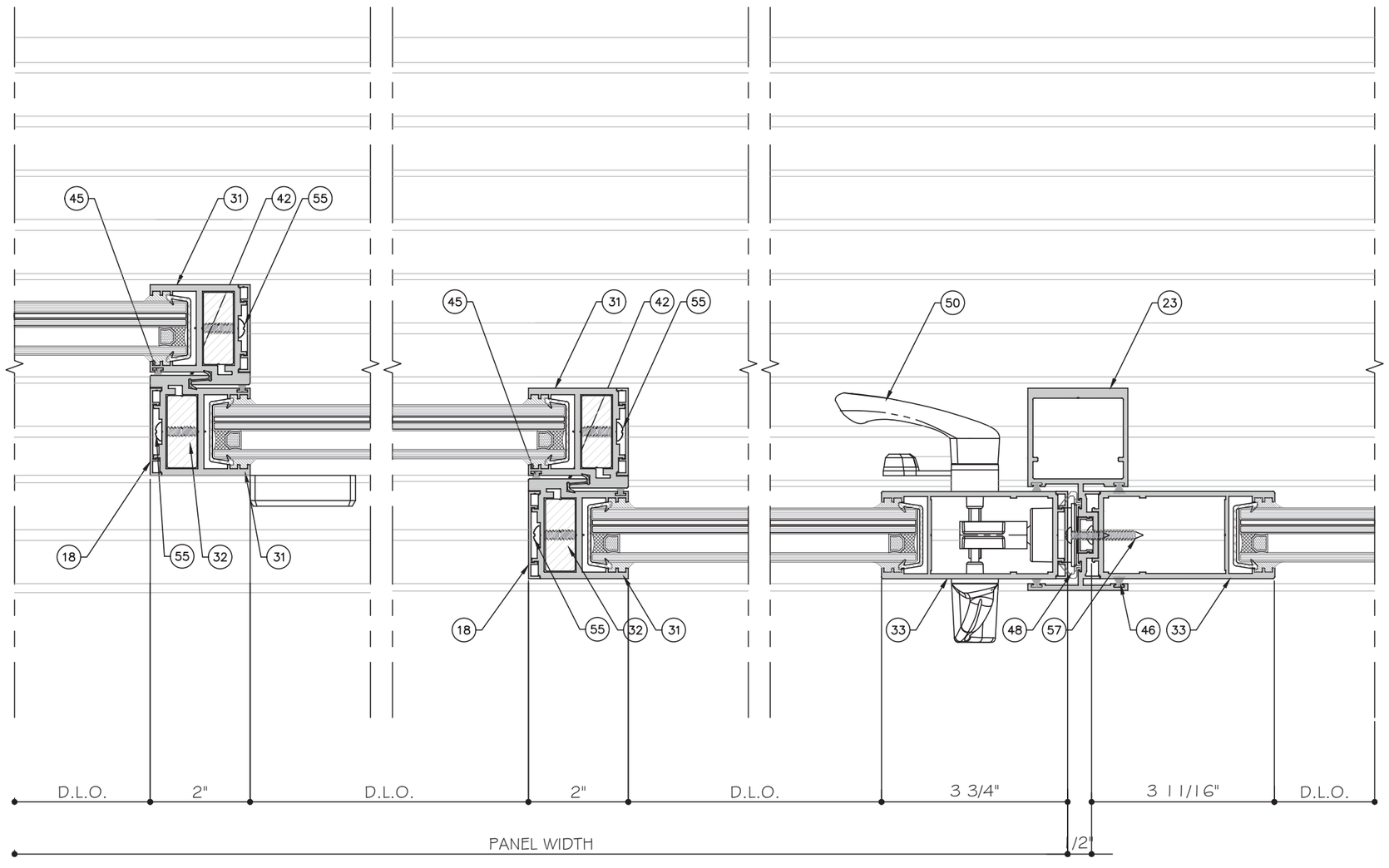

EXTERIOR

16 / D4.4 DETAIL

16A / D4.4 DETAIL

17 / D4.4 DETAIL

STANDARD INTERLOCK (LEVEL 1 OPTION 1) SHOWN. SEE SHEET K1 FOR LEVEL 2 AND 3 REINFORCEMENT.

LOCK STILE OPTION 1 SHOWN. SEE SHEET E5 FOR OPTION 2.

FIVE (5) TRACK DOOR DETAILS

YIMING WANG P.E.
FLORIDA REGISTRATION
LICENSE
No 55983
C.A.N. 28577
STATE OF FLORIDA
PROFESSIONAL ENGINEER
October 23rd, 2024

MCY ENGINEERING, INC.
GLAZING CONSULTANTS
12781 MIRAMAR PARKWAY #301
MIRAMAR, FL. 33027 P: 305.271.0117
www.MCYEngineering.com mcy@mcyengineering.com

ES-SGD2020 SLIDING GLASS DOOR (LMI & SMI)

ES WINDOWS, INC.
10653 NE Quaybridge Ct.
Miami, FL 33138
TEL. (305) 624-7775

Rev. No.	Date	Drawn By	REVISION	Description
R5	10.08.2024	James		

Drawn Date	Scale
10.08.2024	

DRAWING NO.
AD16–29

D4.4

Sheet No.
37 OF 59

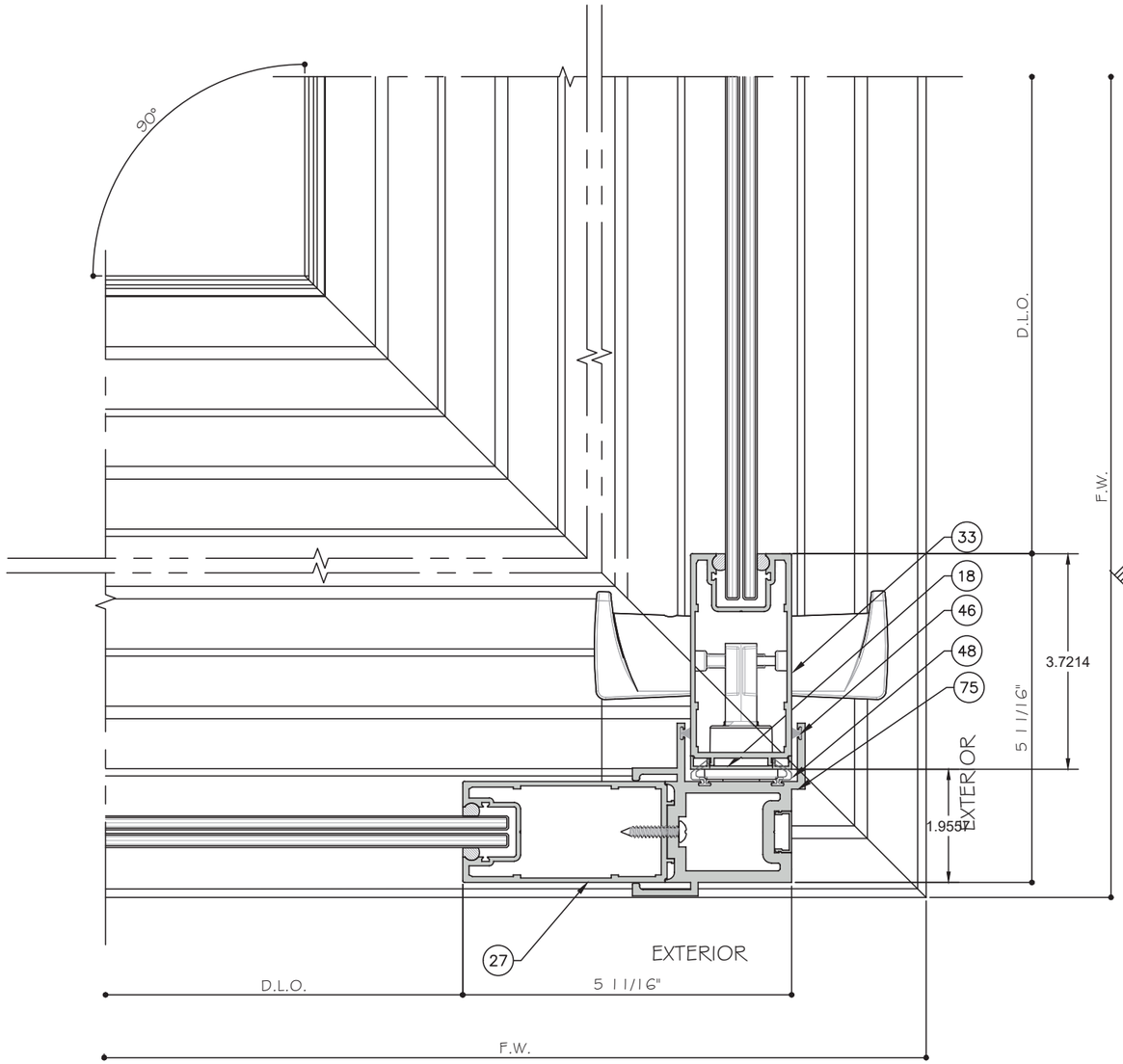

43 DETAIL
D4.5

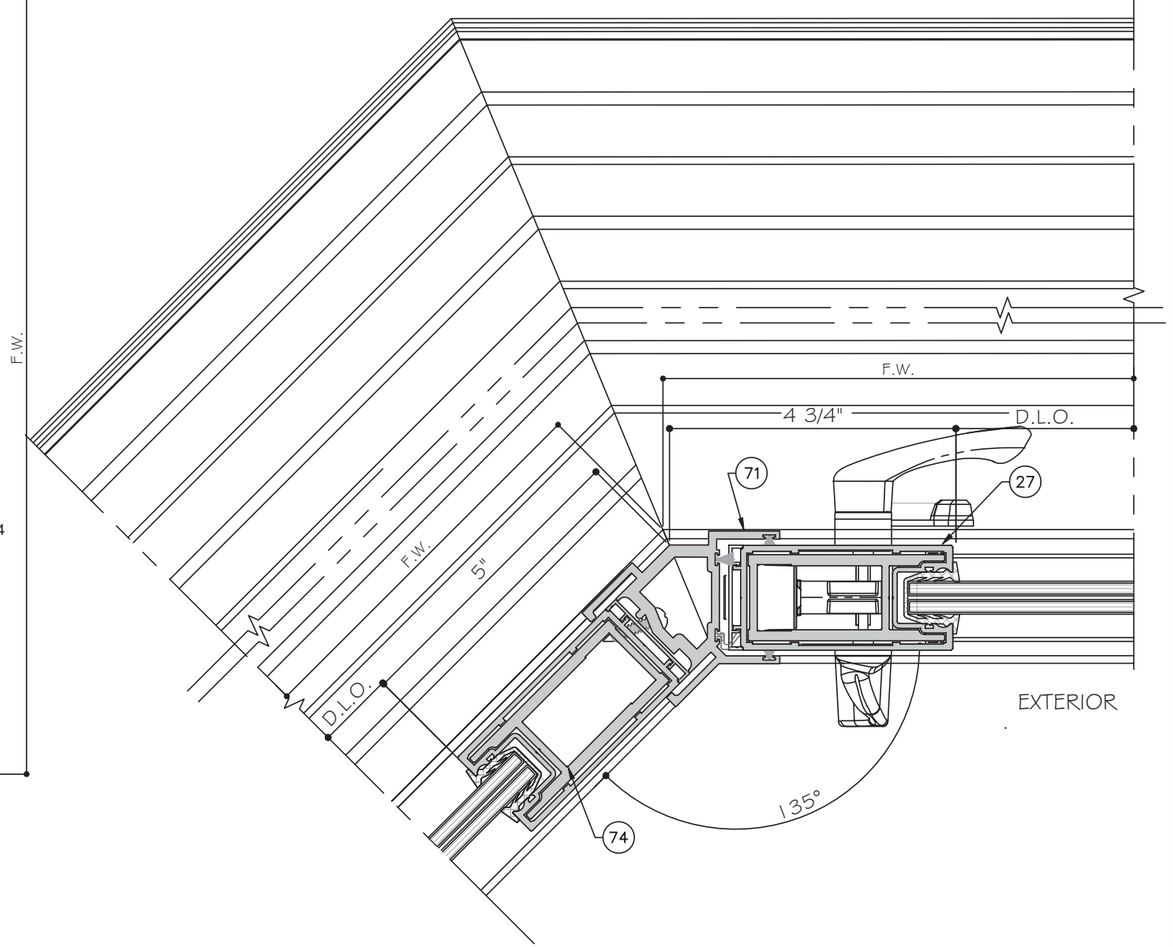

44 DETAIL
D4.5

CORNER DETAILS

CORNERS CAN BE USED ON ALL TRACK CONFIGURATIONS

STANDARD INTERLOCK (LEVEL 1 OPTION 1) SHOWN. SEE SHEET K1 FOR LEVEL 2 AND 3 REINFORCEMENT. LOCK STILE OPTION 1 SHOWN. SEE SHEET E5 FOR OPTION 2.

YIJING WANG P.E.
FLORIDA REGISTRATION
LIC. #55983
C.A.N. 28677
STATE OF FLORIDA PROFESSIONAL ENGINEER
No 55983
October 23rd, 2024

MCY ENGINEERING, INC.
GLAZING CONSULTANTS
12781 MIRAMAR PARKWAY #301
MIRAMAR, FL. 33027 P: 305.271.0117
www.MCYEngineering.com mcy@mcyengineering.com

ES-SGD2020 SLIDING GLASS DOOR (LMI & SMI)

ES WINDOWS, INC.
10653 NE Quayibridge Ct.
Miami, FL 33138
TEL. (305) 624-7775

Rev. No.	Date	Drawn By	Description
R5	10.08.2024	James	REVISION

Drawn Date 10.08.2024
Scale

DRAWING NO.
AD16–29

D4.5

Sheet No.
38 OF 59

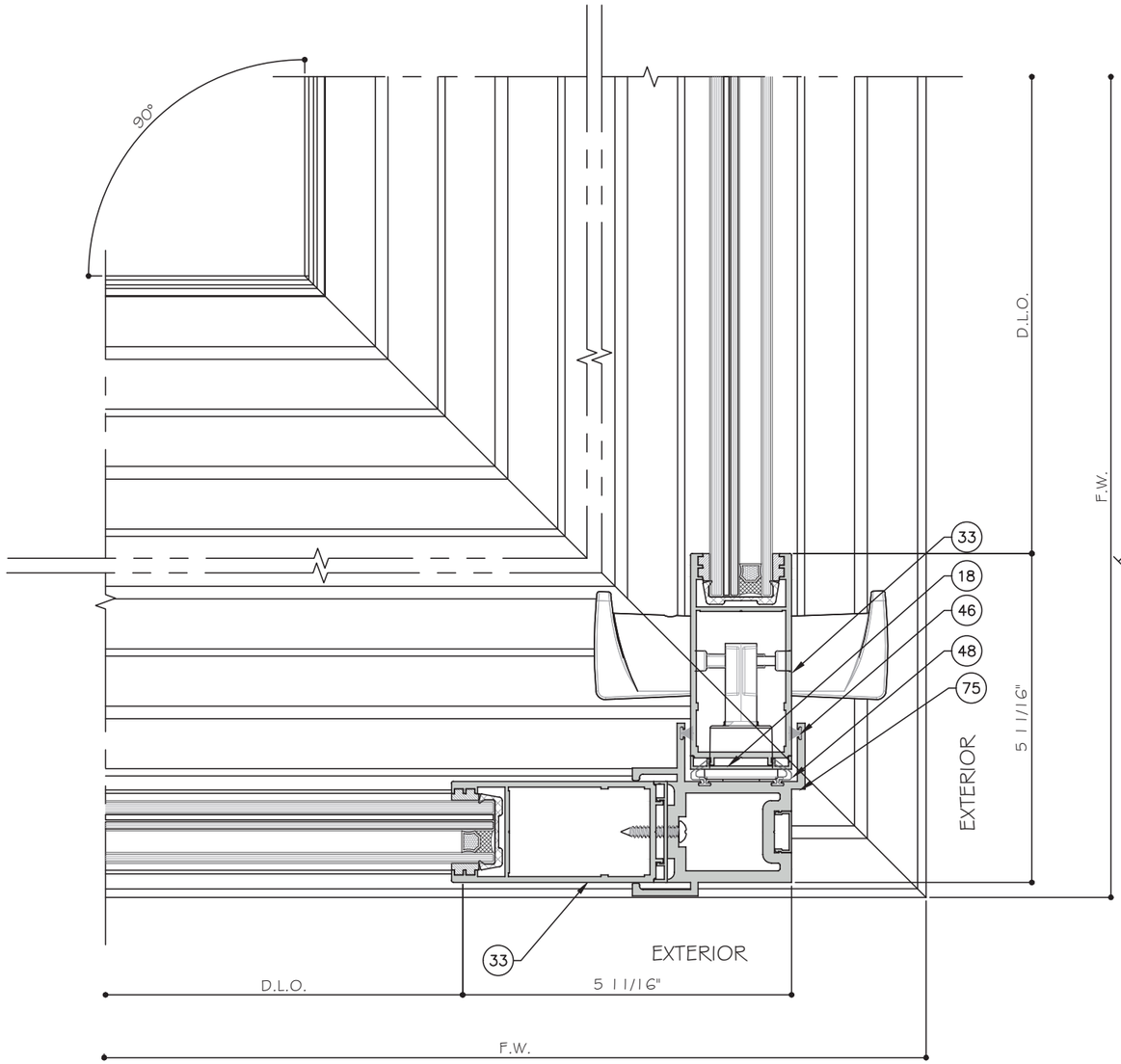

45 DETAIL
D4.6

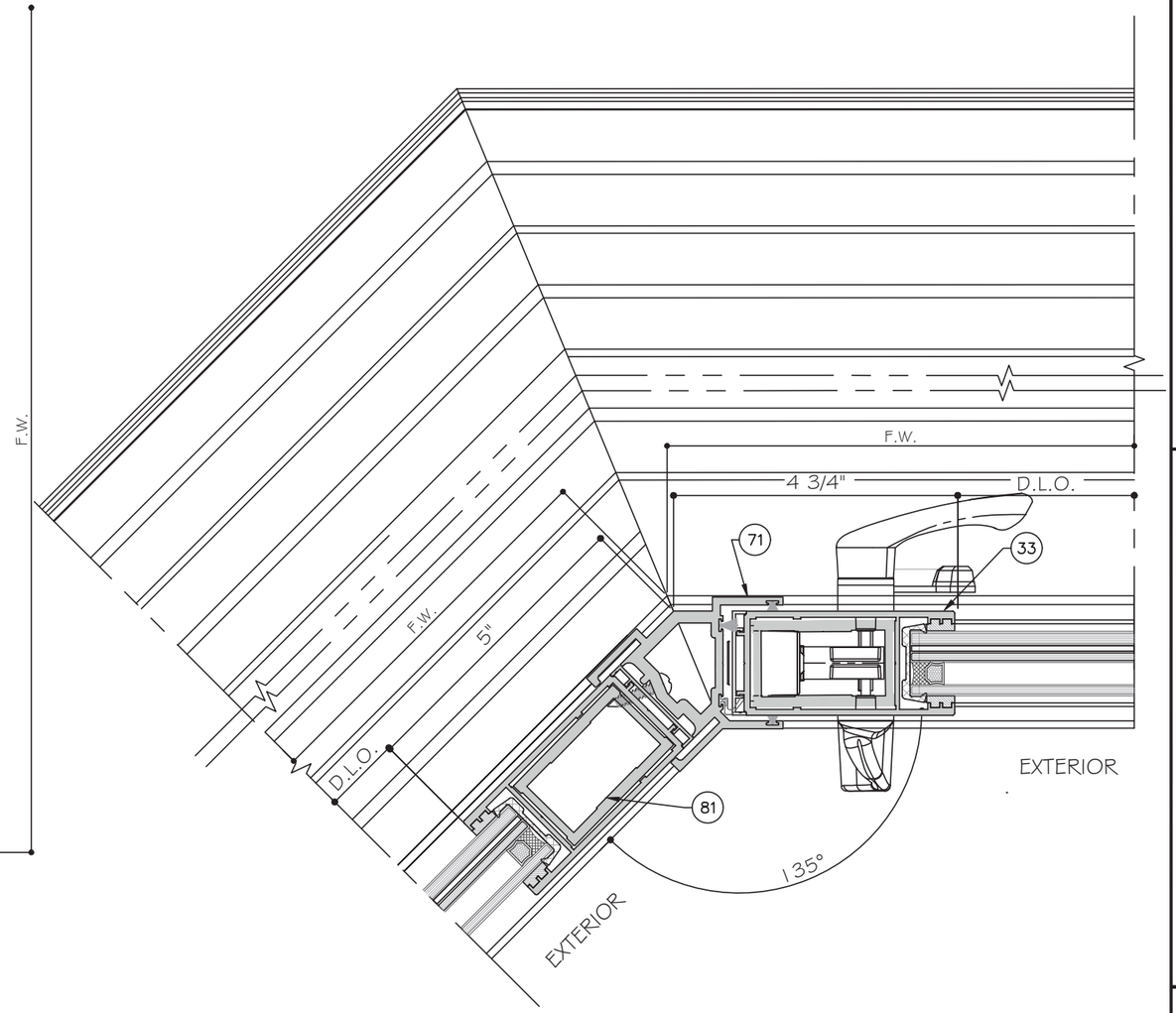

46 DETAIL
D4.6

CORNER DETAILS

CORNERS CAN BE USED ON ALL TRACK CONFIGURATIONS

STANDARD INTERLOCK (LEVEL 1 OPTION 1) SHOWN. SEE SHEET K1 FOR LEVEL 2 AND 3 REINFORCEMENT. LOCK STILE OPTION 1 SHOWN. SEE SHEET E5 FOR OPTION 2.

YIANG WANG P.E.
FLORIDA REGISTRATION
P.E. #55983
C.A.N. 28677
STATE OF FLORIDA PROFESSIONAL ENGINEER
No 55983
October 23rd, 2024

MCY ENGINEERING, INC.
GLAZING CONSULTANTS
12781 MIRAMAR PARKWAY #301
MIRAMAR, FL. 33027 P: 305.271.0117
www.MCYEngineering.com mcy@mcyengineering.com

ES-SGD2020 SLIDING GLASS DOOR (LMI & SMI)

ES WINDOWS, INC.
10653 NE Quaybridge Ct.
Miami, FL 33138
TEL. (305) 624-7775

Rev. No.	Date	Drawn By	Description
R5	10.08.2024	James	REVISION

Drawn Date	Scale
10.08.2024	

DRAWING NO.
AD16–29

D4.6

Sheet No.
39 OF 59

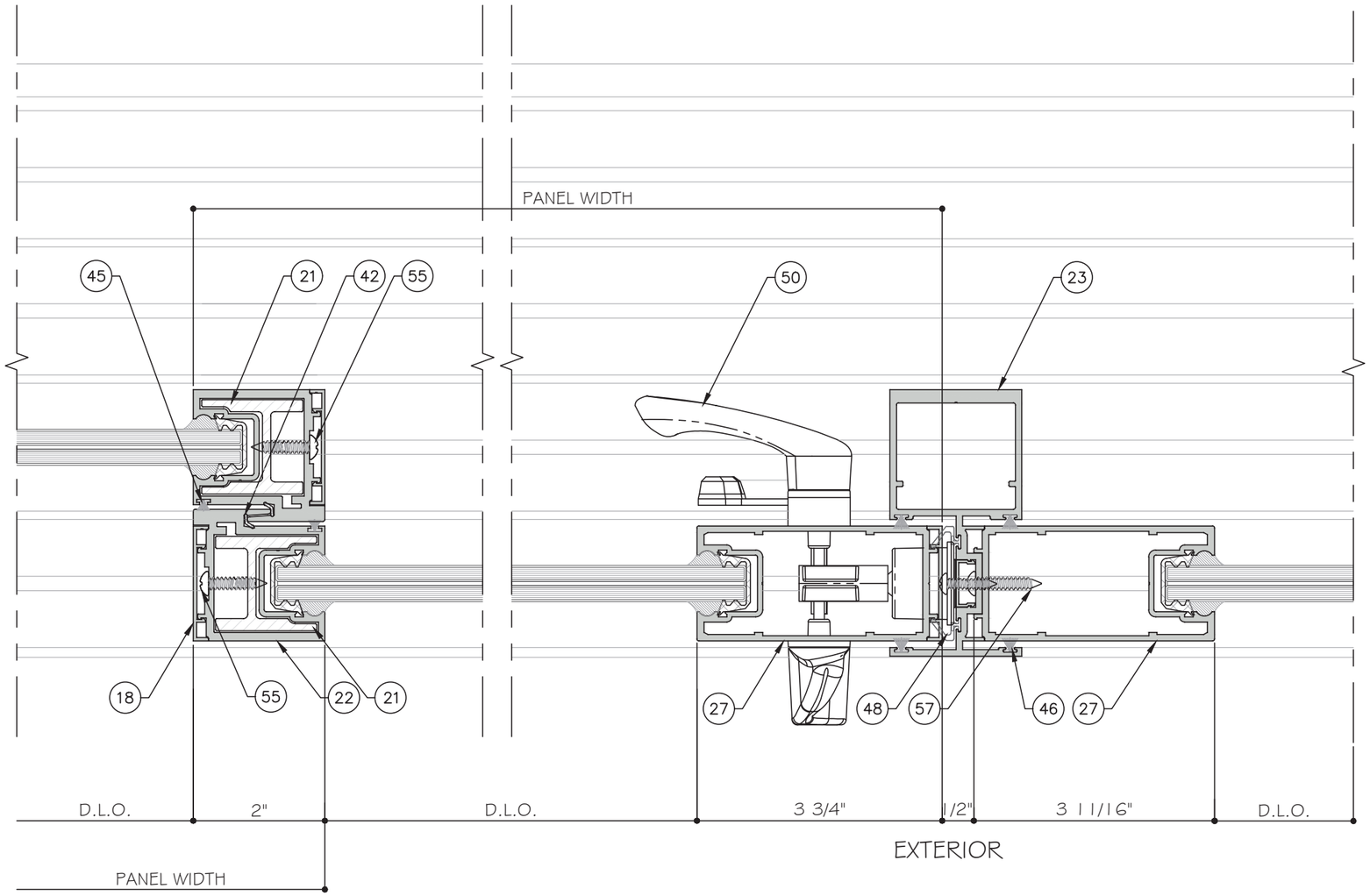

10 / D5 DETAIL

11 / D5 DETAIL

STANDARD INTERLOCK (LEVEL 1 OPTION 1) SHOWN. SEE SHEET K1 FOR LEVEL 2 AND 3 REINFORCEMENT. LOCK STILE OPTION 1 SHOWN. SEE SHEET E5 FOR OPTION 2.

FOUR (4) TRACK DOOR DETAILS

YIMING WANG P.E.
FLORIDA REGISTRATION
FL #55983
C.A.N. 28677
STATE OF FLORIDA PROFESSIONAL ENGINEER No 55983
October 23rd, 2024

MCY ENGINEERING, INC.
GLAZING CONSULTANTS
12781 MIRAMAR PARKWAY #301
MIRAMAR, FL. 33027 P: 305.271.0117
www.MCYEngineering.com mcy@mcyengineering.com

ES-SGD2020 SLIDING GLASS DOOR (LMI & SMI)

ES WINDOWS, INC.
10653 NE Quaybridge Ct.
Miami, FL 33138
TEL. (305) 624-7775

Rev. No.	Date	Drawn By	REVISION	Description
RB	10.08.2024	James		

Drawn Date 10.08.2024
Scale

DRAWING NO.
AD16–29

D5

Sheet No.
40 OF 59

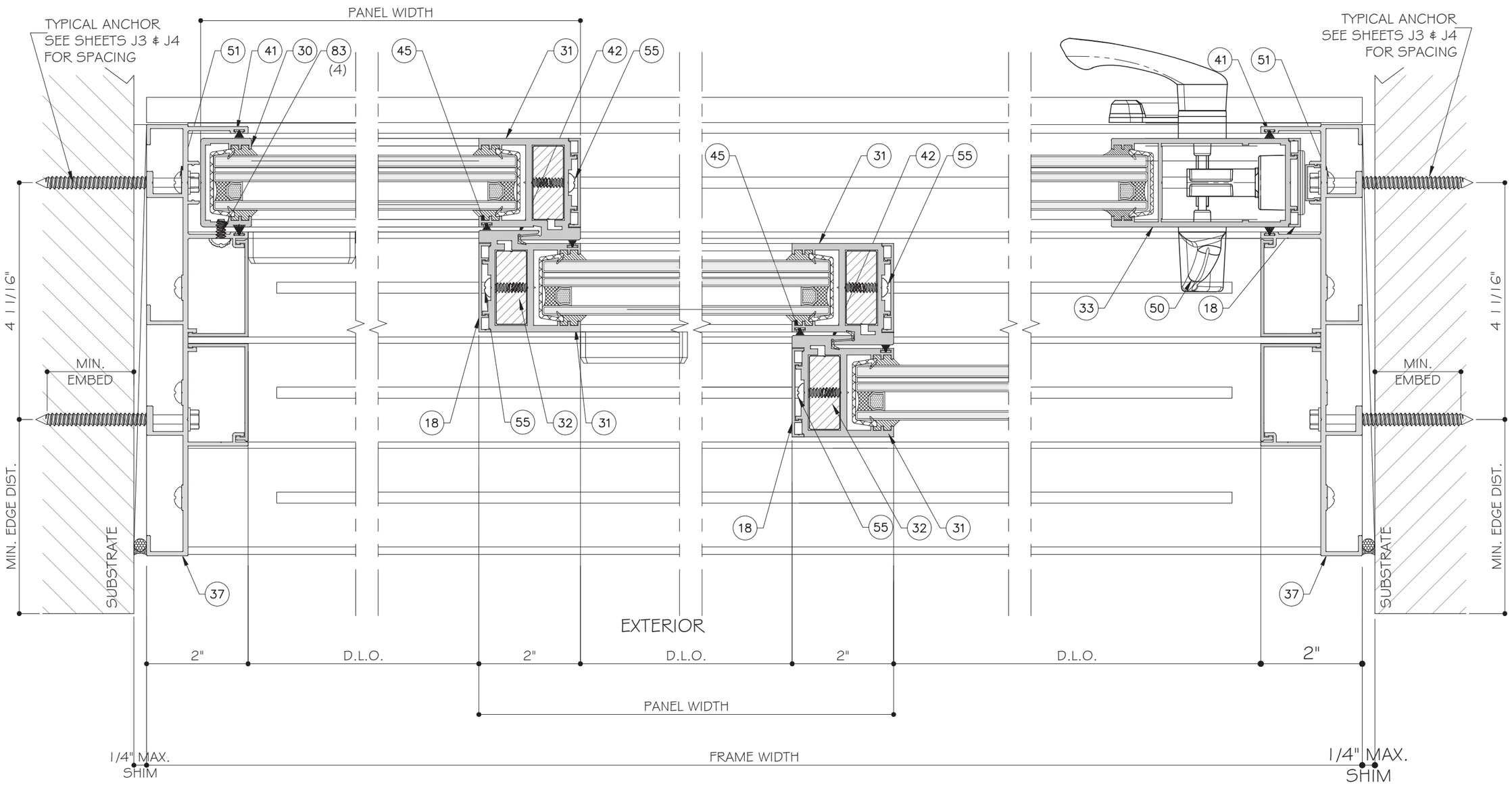

13 / D6 DETAIL

14 / D6 DETAIL

15 / D6 DETAIL

13A / D6 DETAIL

STANDARD INTERLOCK (LEVEL 1 OPTION 1) SHOWN.
SEE SHEET K1 FOR LEVEL 2 AND 3 REINFORCEMENT.

LOCK STILE OPTION 1 SHOWN. SEE SHEET E5 FOR OPTION 2.

FOUR (4) TRACK DOOR DETAILS

YIPANG WANG
LICENSE
No 55983
STATE OF FLORIDA
PROFESSIONAL ENGINEER
October 23rd, 2024

MCY ENGINEERING, INC.
GLAZING CONSULTANTS
12781 MIRAMAR PARKWAY #301
MIRAMAR, FL. 33027
P: 305.271.0117
www.MCYEngineering.com
mcy@mcyengineering.com

ES-SGD2020 SLIDING GLASS DOOR (LMI & SMI)

ES WINDOWS, INC.
10653 NE Quaybridge Ct.
Miami, FL 33138
TEL. (305) 624-7775

Rev. No.	Date	Drawn By	Description
R5	10.08.2024	James	REVISION

Drawn Date 10.08.2024

Scale

DRAWING NO.
AD16-29

D6

Sheet No.
41 OF 59

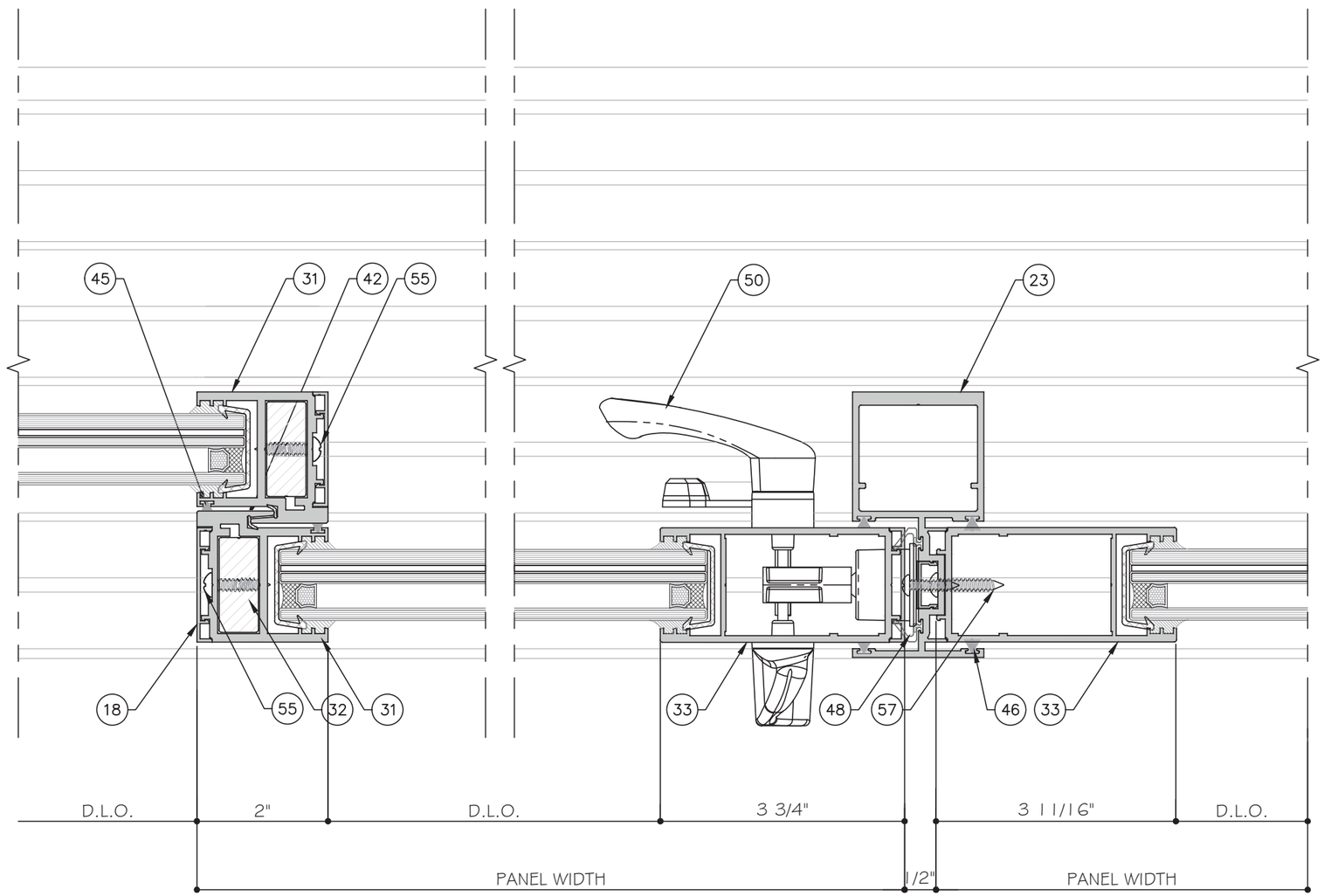

16 / D7 DETAIL

17 / D7 DETAIL

FOUR (4) TRACK DOOR DETAILS

STANDARD INTERLOCK (LEVEL 1 OPTION 1) SHOWN. SEE SHEET K1 FOR LEVEL 2 AND 3 REINFORCEMENT.

LOCK STILE OPTION 1 SHOWN. SEE SHEET E5 FOR OPTION 2.

YIMING WANG
STATE OF FLORIDA
LICENSE
No 55983
PROFESSIONAL ENGINEER
FLORIDA REGISTRATION
C.O. #55983
C.A.N. 28677
October 23rd, 2024

MCY ENGINEERING, INC.
GLAZING CONSULTANTS
12781 MIRAMAR PARKWAY #301
MIRAMAR, FL. 33027 P: 305.271.0117
www.MCYEngineering.com mcy@mcyengineering.com

ES-SGD2020 SLIDING GLASS DOOR (LMI & SMI)

ES WINDOWS, INC.
10653 NE Quaybridge Ct.
Miami, FL 33138
TEL. (305) 624-7775

Rev. No.	Date	Drawn By	Description
R5	10.08.2024	James	REVISION

Drawn Date 10.08.2024

Scale

DRAWING NO. AD16–29

D7

Sheet No. 42 OF 59

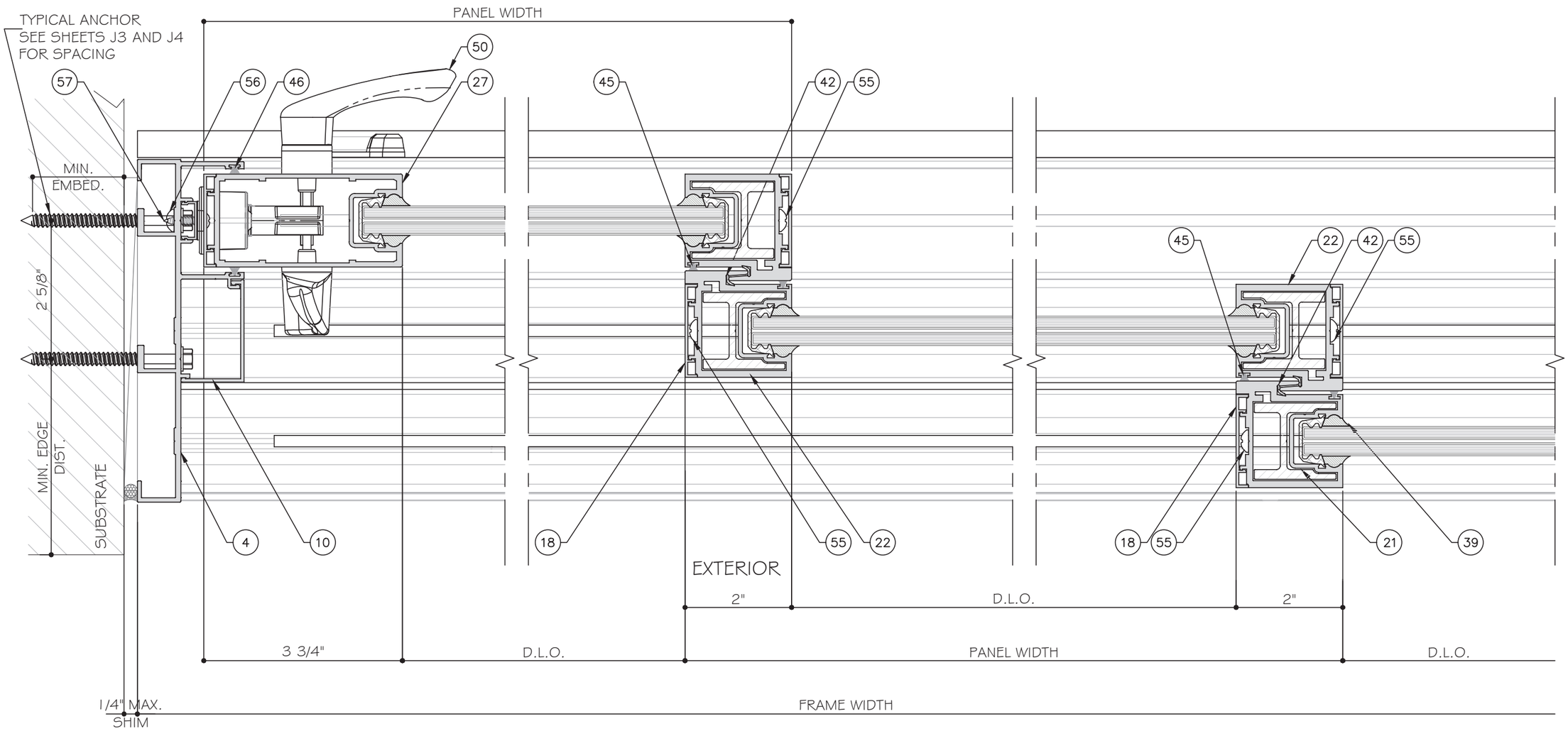

19 / D8 DETAIL

20 / D8 DETAIL

21 / D8 DETAIL

STANDARD INTERLOCK (LEVEL 1 OPTION 1) SHOWN.
SEE SHEET K1 FOR LEVEL 2 AND 3 REINFORCEMENT.

LOCK STILE OPTION 1 SHOWN. SEE SHEET E5 FOR OPTION 2.

THREE (3) TRACK DOOR DETAILS

YIANG WANG P.E.
FLORIDA REGISTRATION
No. #55983
C.A.N. 28677
STATE OF FLORIDA PROFESSIONAL ENGINEER
October 23rd, 2024

MCY ENGINEERING, INC.
GLAZING CONSULTANTS
12781 MIRAMAR PARKWAY #301
MIRAMAR, FL. 33027 P: 305.271.0117
www.MCYEngineering.com mcy@mcyengineering.com

ES-SGD2020 SLIDING GLASS DOOR (LMI & SMI)

ES WINDOWS, INC.
10653 NE Quaybridge Ct.
Miami, FL 33138
TEL. (305) 624-7775

Rev. No.	Date	Drawn By	REVISION	Description
R5	10.08.2024	James		

Drawn Date 10.08.2024
Scale

DRAWING NO.
AD16–29

D8

Sheet No.
43 OF 59

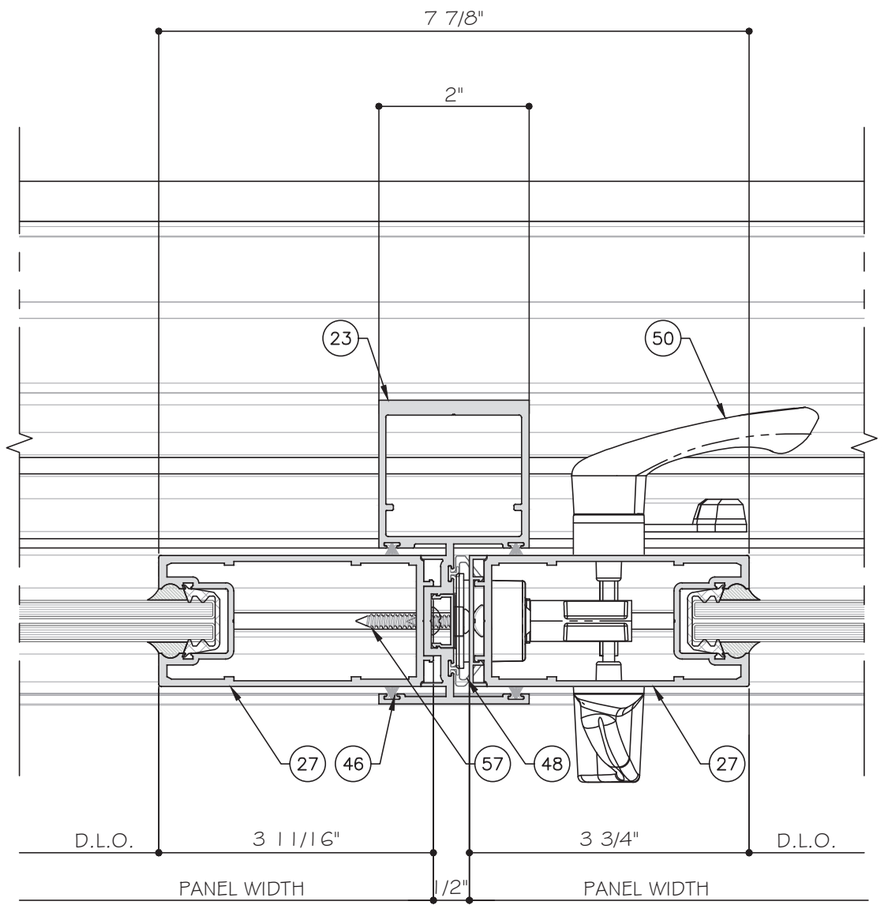

22 DETAIL
D9

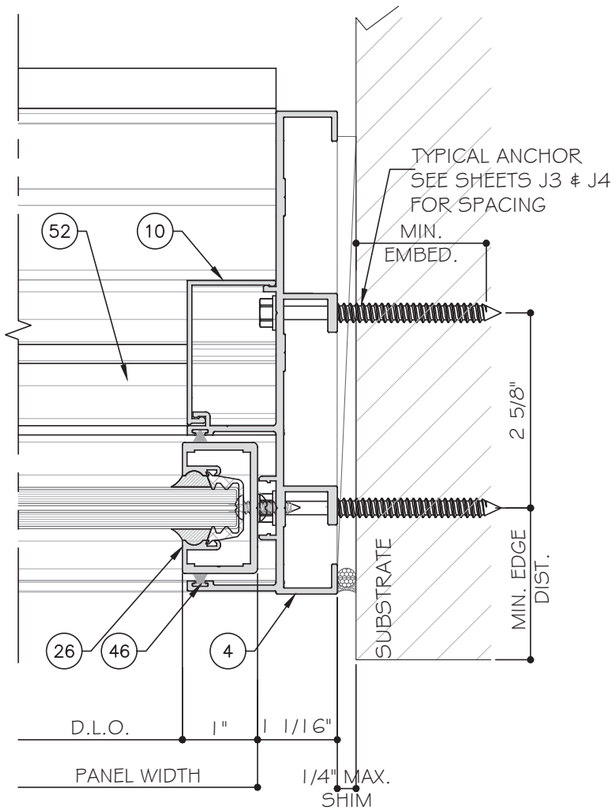

23 DETAIL
D9

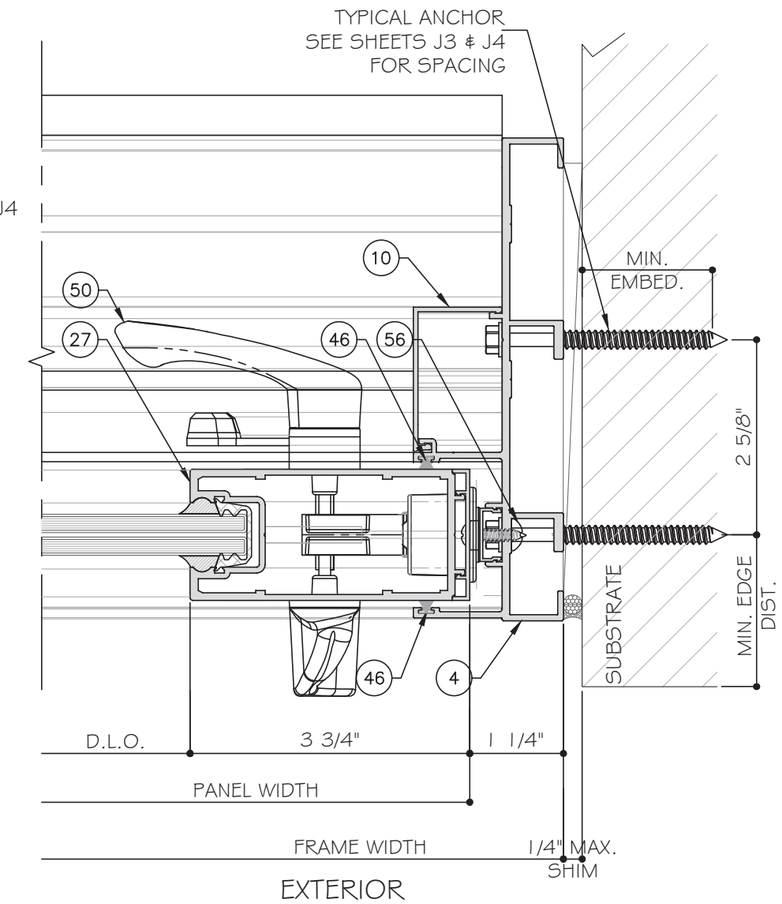

24 DETAIL
D9

LOCK STILE OPTION 1 SHOWN. SEE SHEET E5 FOR OPTION 2.

THREE (3) TRACK DOOR DETAILS

YIJING WANG, P.E.
FLORIDA REGISTRATION
No. #55983
C.A.N. 28677
STATE OF FLORIDA PROFESSIONAL ENGINEER
October 23rd, 2024

MCY ENGINEERING, INC.
GLAZING CONSULTANTS
12781 MIRAMAR PARKWAY #301
MIRAMAR, FL. 33027 P: 305.271.0117
www.MCYEngineering.com mcy@mcyengineering.com

ES-SGD2020 SLIDING GLASS DOOR (LMI & SMI)

ES WINDOWS, INC.
10653 NE Quayibridge Ct.
Miami, FL 33138
TEL. (305) 624-7775

Rev. No.	Date	Drawn By	REVISION	Description
R5	10.08.2024	James		

Drawn Date 10.08.2024
Scale

DRAWING NO.
AD16–29

D9

Sheet No.
44 OF 59

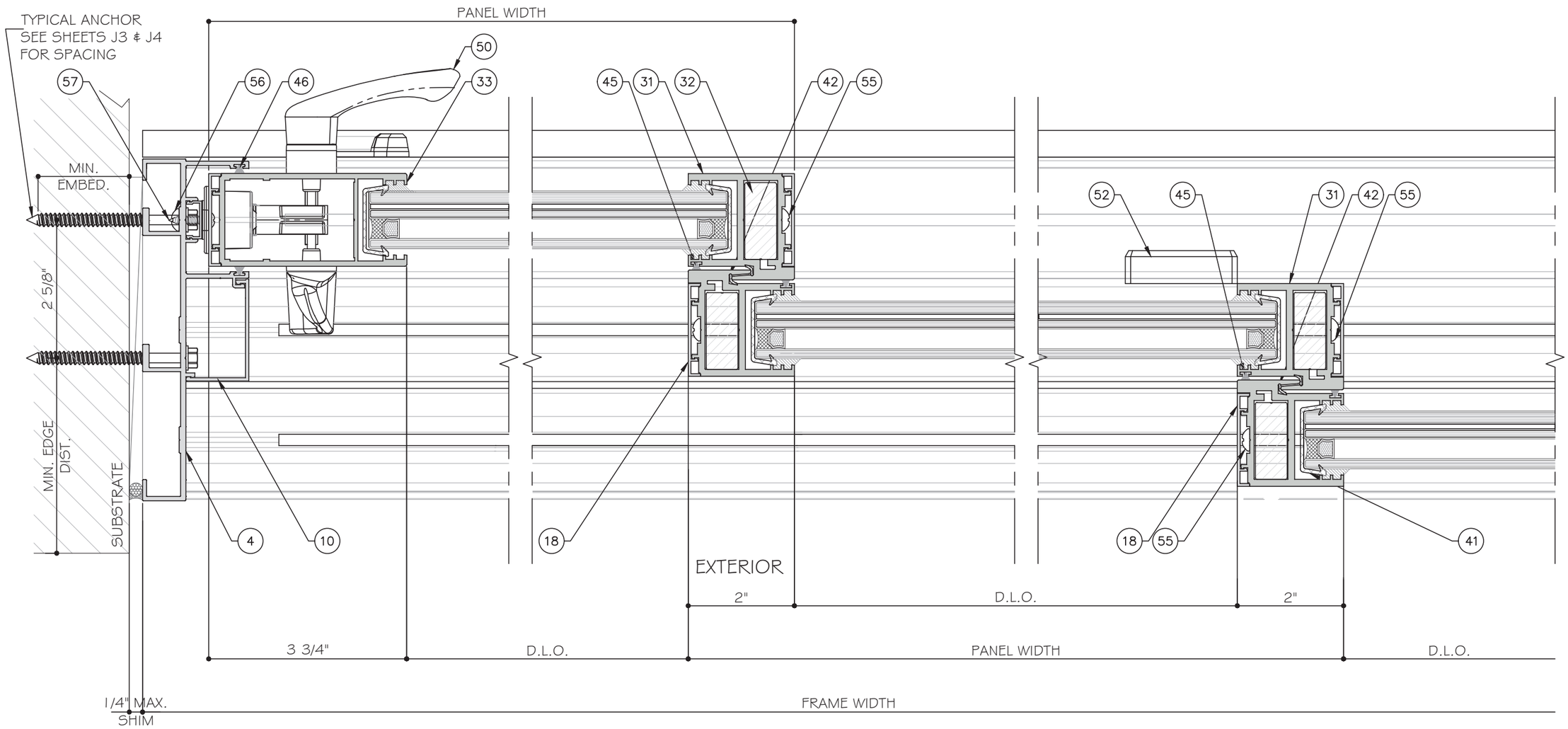

25 D10 DETAIL

26 D10 DETAIL

27 D10 DETAIL

STANDARD INTERLOCK (LEVEL 1 OPTION 1) SHOWN.
SEE SHEET K1 FOR LEVEL 2 AND 3 REINFORCEMENT.

LOCK STILE OPTION 1 SHOWN. SEE SHEET E5 FOR OPTION 2.

THREE (3) TRACK DOOR DETAILS

YIANG WANG P.E.
FLORIDA REGISTRATION
No. #55983
C.A.N. 28677
STATE OF FLORIDA
PROFESSIONAL ENGINEER
October 23rd, 2024

MCY ENGINEERING, INC.
GLAZING CONSULTANTS
12781 MIRAMAR PARKWAY #301
MIRAMAR, FL. 33027 P: 305.271.0117
www.MCYEngineering.com mcy@mcyengineering.com

ES-SGD2020 SLIDING GLASS DOOR (LMI & SMI)

ES WINDOWS, INC.
10653 NE Quaybridge Ct.
Miami, FL 33138
TEL. (305) 624-7775

Rev. No.	Date	Drawn By	REVISION	Description
R5	10.08.2024	James		

Drawn Date 10.08.2024

Scale

DRAWING NO.
AD16–29

D10

Sheet No.
45 OF 59

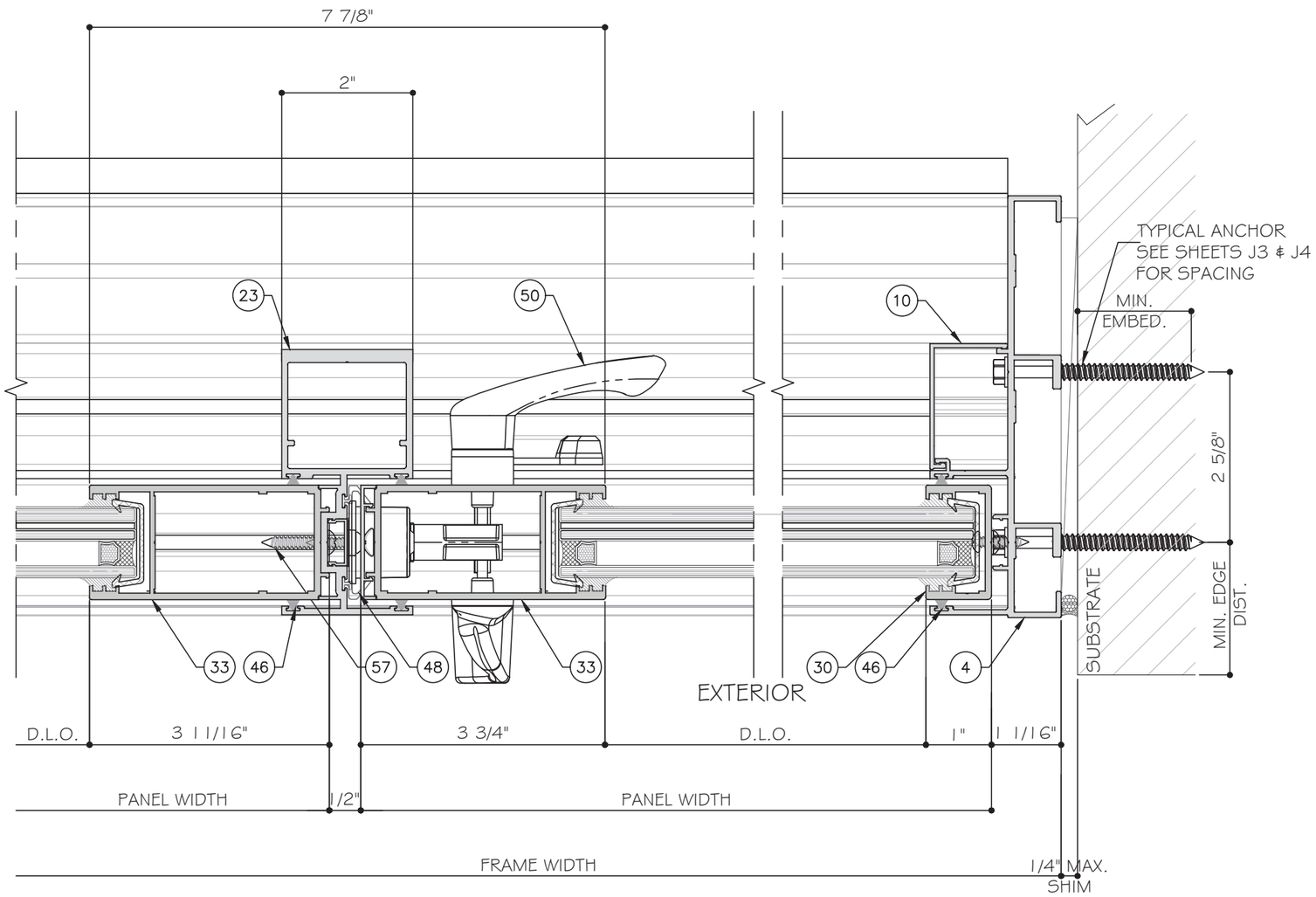

28 / D11 DETAIL

29 / D11 DETAIL

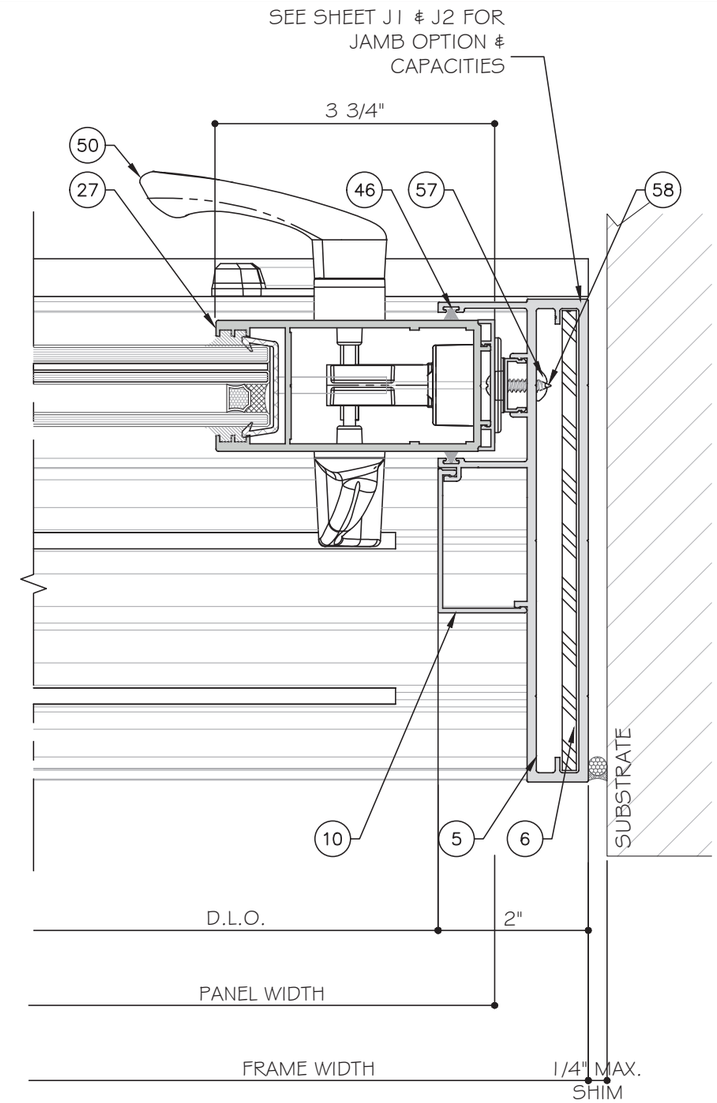

FREESTANDING JAMB FOR 3 TRACKS OPTION

LOCK STILE OPTION 1 SHOWN. SEE SHEET E5 FOR OPTION 2.

THREE (3) TRACK DOOR DETAILS

YIANG WANG, P.E.
FLORIDA REGISTRATION
LIC. #55983
C.A.N. 28677
STATE OF FLORIDA PROFESSIONAL ENGINEER No 55983
October 23rd, 2024

MCY ENGINEERING, INC.
GLAZING CONSULTANTS
12781 MIRAMAR PARKWAY #301
MIRAMAR, FL. 33027 P: 305.271.0117
www.MCYEngineering.com mcy@mcyengineering.com

ES-SGD2020 SLIDING GLASS DOOR (LMI & SMI)

ES WINDOWS, INC.
10653 NE Quaybridge Ct.
Miami, FL 33138
TEL. (305) 624-7775

Rev. No.	Date	Drawn By	REVISION	Description
R5	10.08.2024	James		

Drawn Date 10.08.2024

Scale

DRAWING NO. AD16–29

D11

Sheet No. 46 OF 59

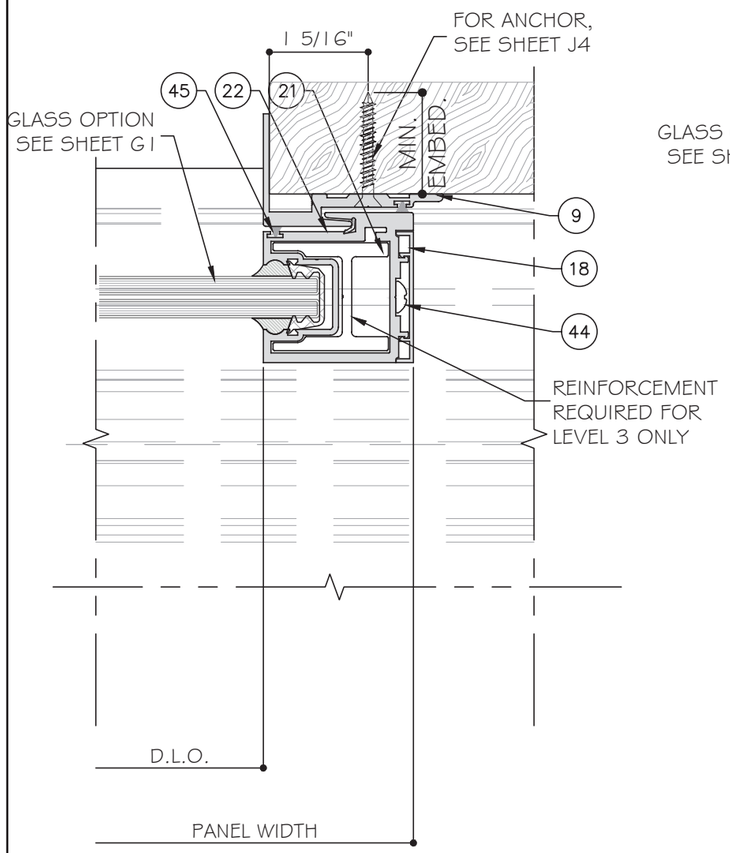

30 / D12 DETAIL DETAIL

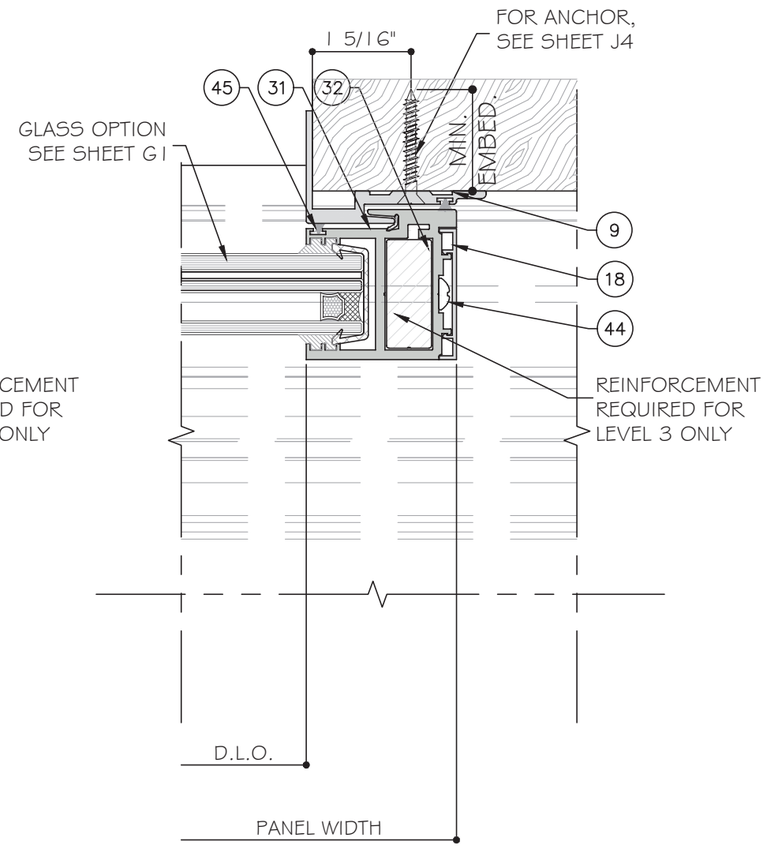

30 / D12 DETAIL OPTION

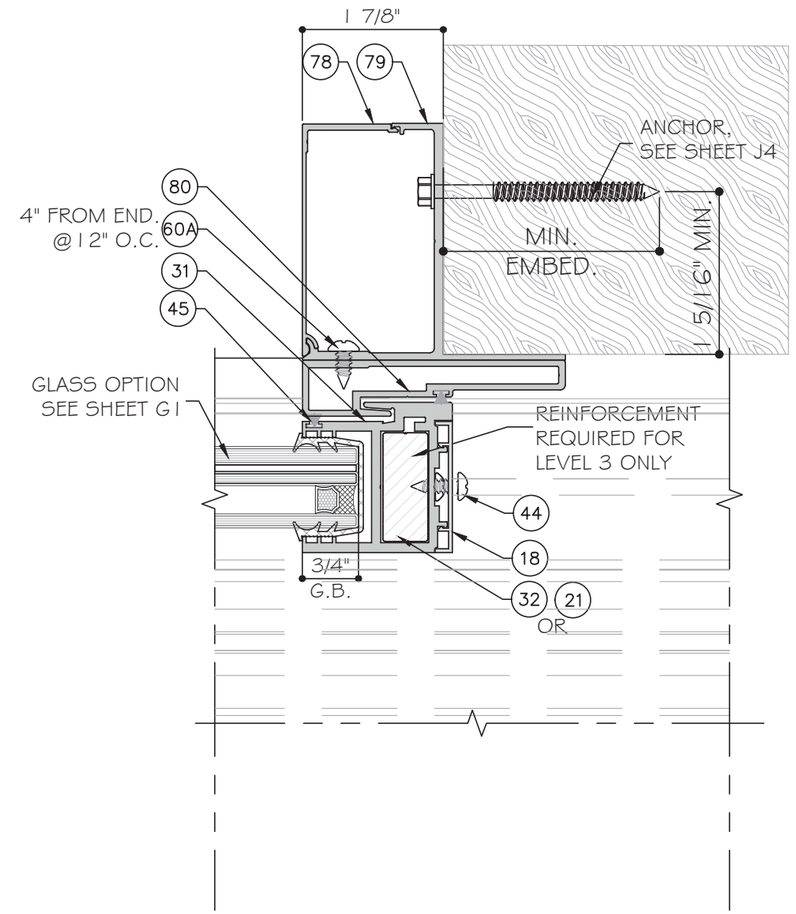

30 / D12 DETAIL OPTION

POCKET DETAIL APPLY TO 2 TRACK & 3 TRACK & 4 TRACK DOORS & 5 TRACK DOORS.

YIMING WANG P.E.
FLORIDA REGISTRATION
No. #55983
C.A.N. 28677
STATE OF FLORIDA PROFESSIONAL ENGINEER
October 23rd, 2024

MCY ENGINEERING, INC.
GLAZING CONSULTANTS
12781 MIRAMAR PARKWAY #301
MIRAMAR, FL. 33027 P: 305.271.0117
www.MCYEngineering.com mcy@mcyengineering.com

ES-SGD2020 SLIDING GLASS DOOR (LMI & SMI)

ES WINDOWS, INC.
10653 NE Quaybridge Ct.
Miami, FL 33138
TEL. (305) 624-7775

Rev. No.	Date	Drawn By	Description
R5	10.08.2024	James	REVISION

Drawn Date 10.08.2024
Scale

DRAWING NO.
AD16–29

D12

Sheet No.
47 OF 59

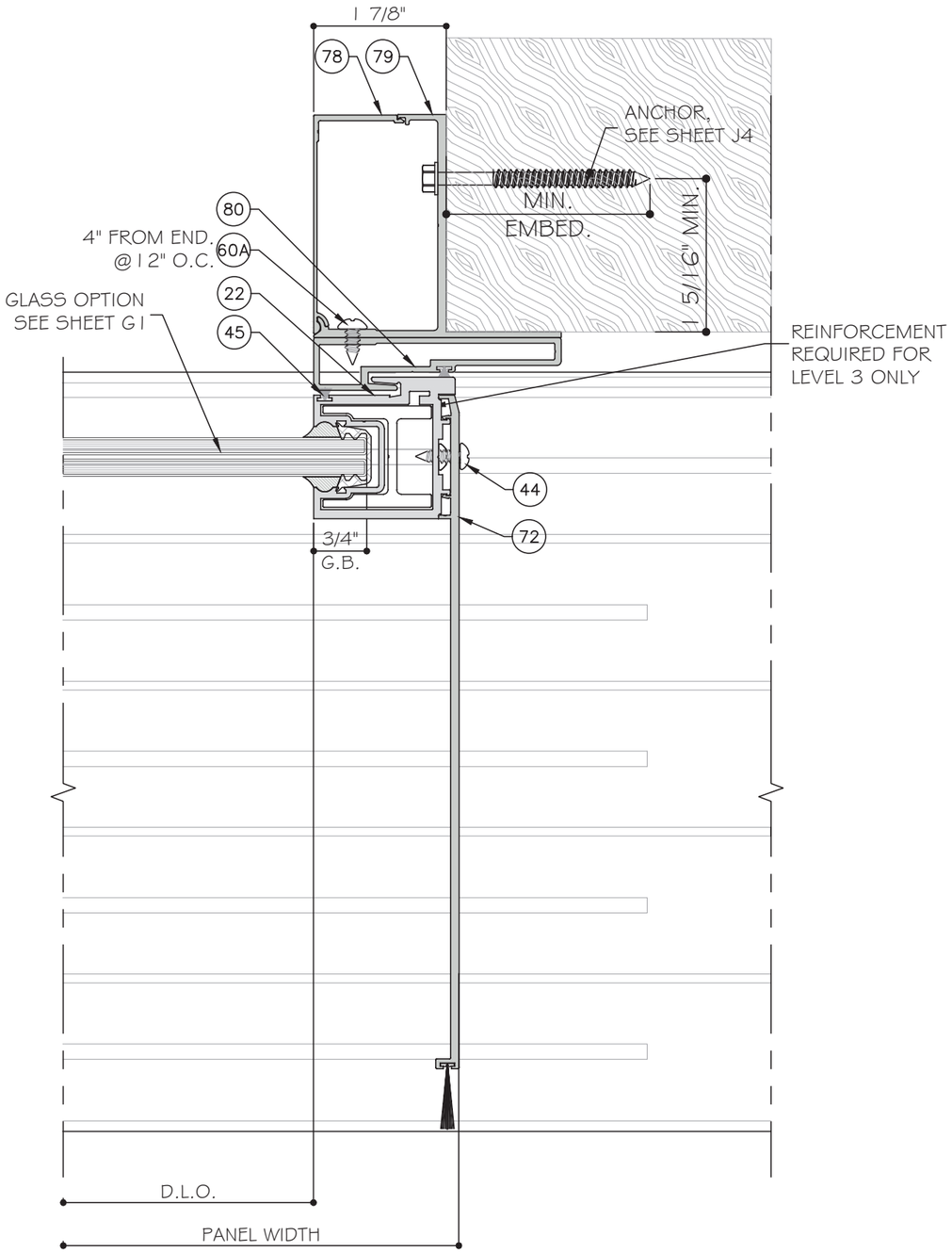

30A DETAIL
D12A

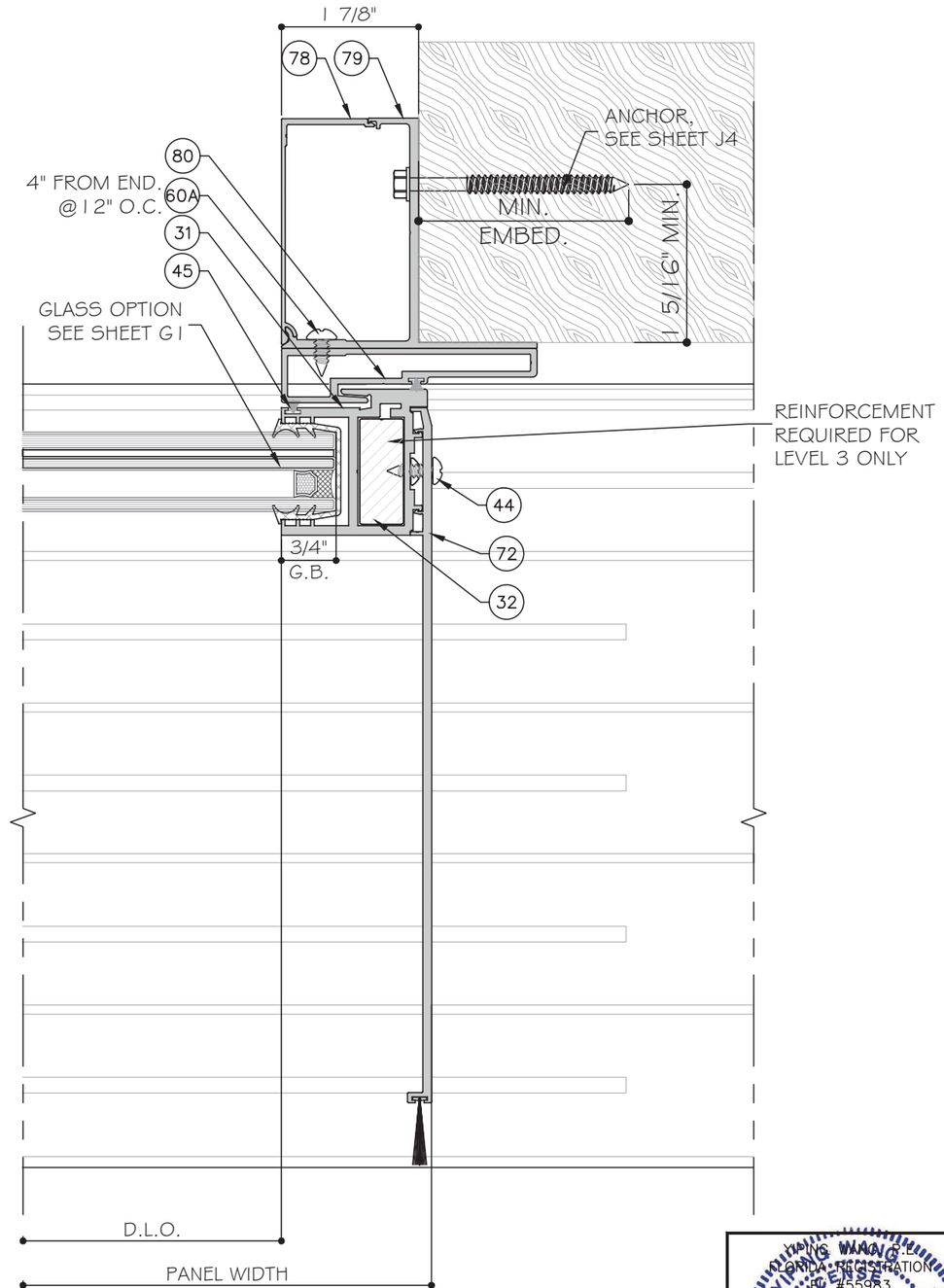

30A DETAIL
D12A OPTION

POCKET DETAIL APPLY TO 2 TRACK & 3 TRACK & 4 TRACK DOORS & 5 TRACK DOORS.

YIPING WANG, P.E.
FLORIDA REGISTRATION
No #55983
C.A.N. 28577
STATE OF FLORIDA PROFESSIONAL ENGINEER
October 23rd, 2024

MCY ENGINEERING, INC.
GLAZING CONSULTANTS
12781 MIRAMAR PARKWAY #301
MIRAMAR, FL. 33027 P: 305.271.0117
www.MCYEngineering.com mcy@mcyengineering.com

ES-SGD2020 SLIDING GLASS DOOR (LMI & SMI)

ES WINDOWS, INC.
10653 NE Quaybridge Ct.
Miami, FL 33138
TEL. (305) 624-7775

Rev. No.	Date	Drawn By	REVISION	Description
RB	10.08.2024	James		

Drawn Date 10.08.2024
Scale

DRAWING NO.
AD16–29

D12A

Sheet No.
48 OF 59

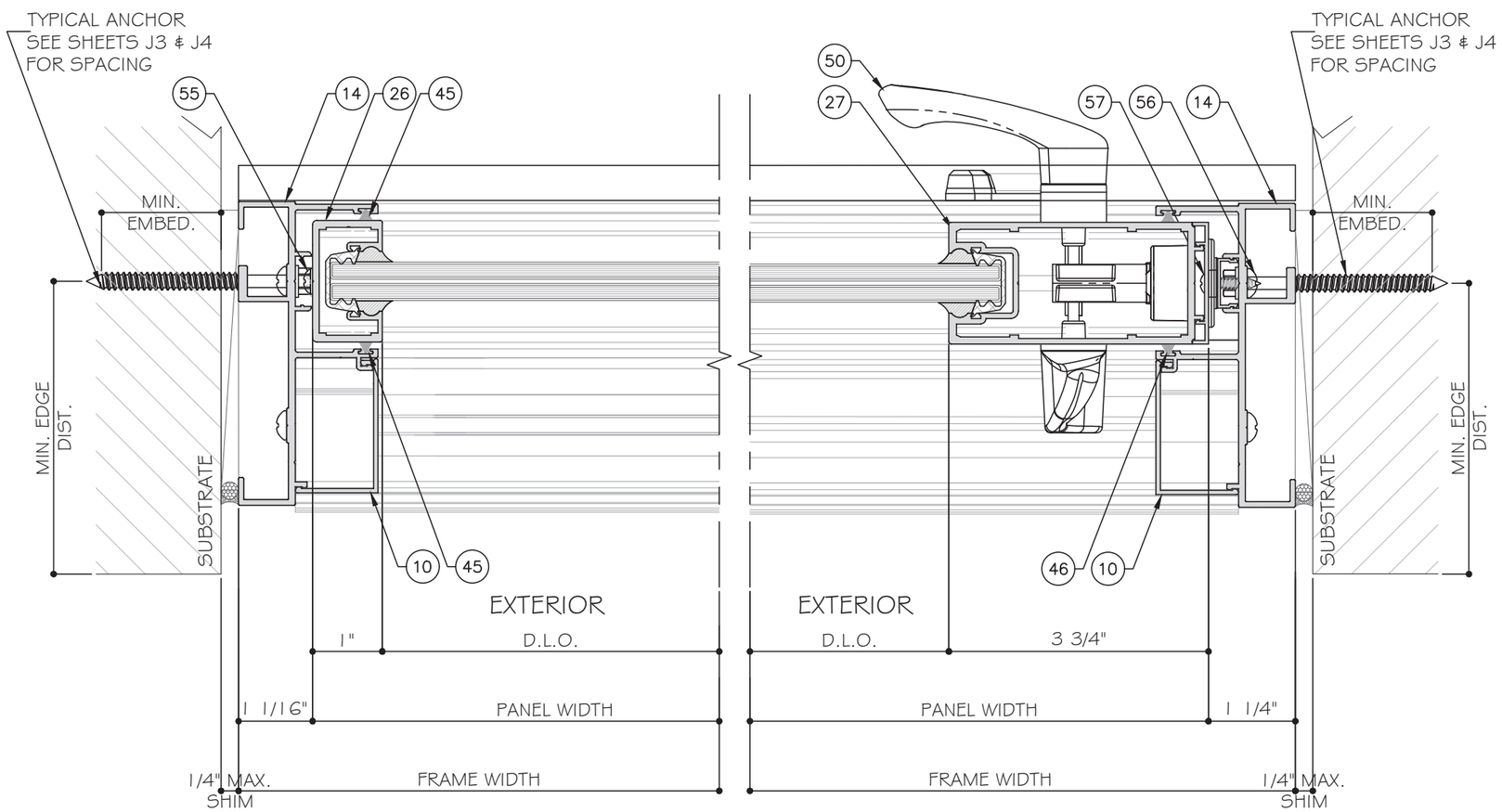

32 / D13 DETAIL

33 / D13 DETAIL

STANDARD INTERLOCK (LEVEL 1 OPTION 1) SHOWN.
SEE SHEET K1 FOR LEVEL 2 AND 3 REINFORCEMENT.

LOCK STILE OPTION 1 SHOWN. SEE SHEET E5 FOR OPTION 2.

TWO (2) TRACK DOOR DETAILS

YIANG WANG P.E.
FLORIDA REGISTRATION
No. #55983
C.A.N. 28677
STATE OF FLORIDA PROFESSIONAL ENGINEER
October 23rd, 2024

MCY ENGINEERING, INC.
GLAZING CONSULTANTS
12781 MIRAMAR PARKWAY #301
MIRAMAR, FL. 33027 P: 305.271.0117
www.MCYEngineering.com mcy@mcyengineering.com

ES-SGD2020 SLIDING GLASS DOOR (LMI & SMI)

ES WINDOWS, INC.
10653 NE Quayibridge Ct.
Miami, FL 33138
TEL. (305) 624-7775

Rev. No.	Date	Drawn By	Description
R5	10.08.2024	James	REVISION

Drawn Date 10.08.2024
Scale

DRAWING NO.
AD16–29

D13

Sheet No.
49 OF 59

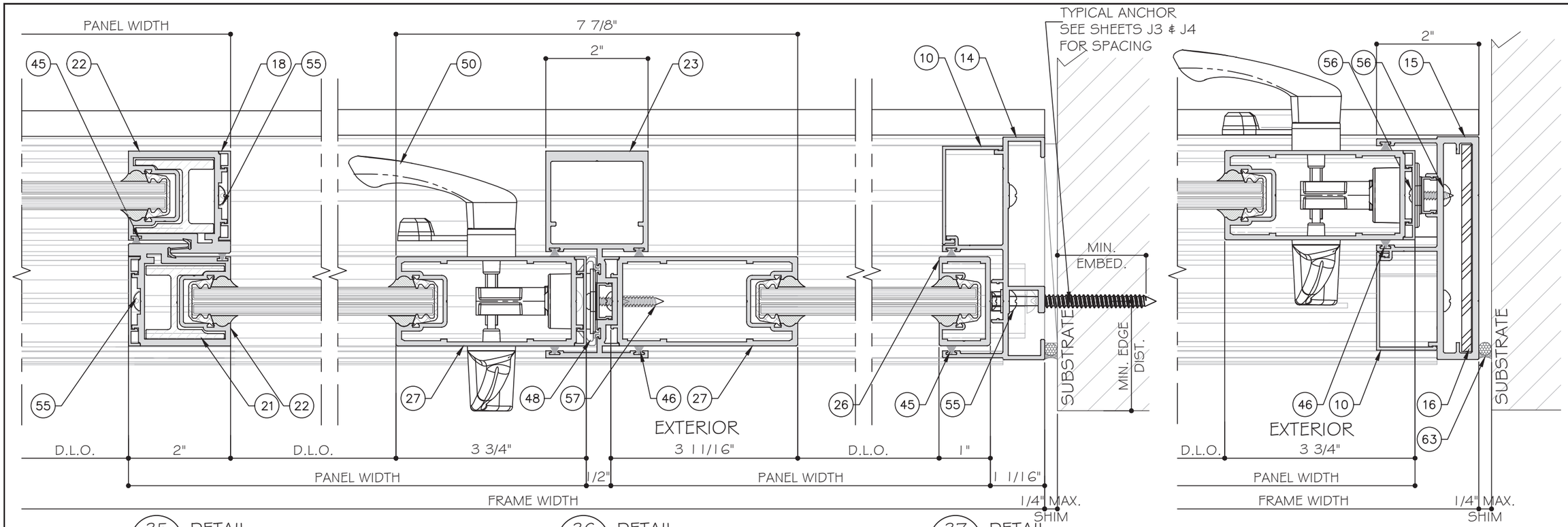

35 / D14 DETAIL

36 / D14 DETAIL

37 / D14 DETAIL

FREESTANDING JAMB OPTION

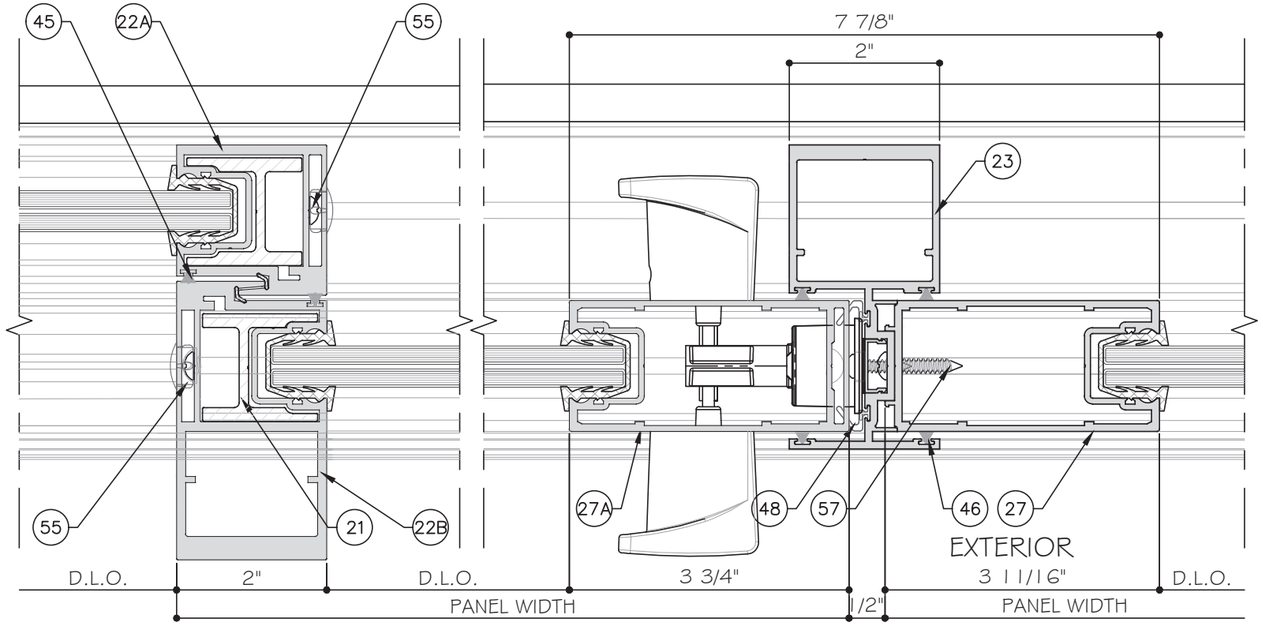

35 / D14 OPTION DETAIL

36 / D14 OPTION DETAIL

STANDARD INTERLOCK (LEVEL 1 OPTION 1) SHOWN. SEE SHEET K1 FOR LEVEL 2 AND 3 REINFORCEMENT.

LOCK STILE OPTION 1 SHOWN. SEE SHEET E5 FOR OPTION 2.

TWO (2) TRACK DOOR DETAILS

YIANG WANG P.E.
FLORIDA REGISTRATION
PE #55983
C.A.N. 28677
STATE OF FLORIDA
PROFESSIONAL ENGINEER
October 23rd, 2024

MCY ENGINEERING, INC.
GLAZING CONSULTANTS
12781 MIRAMAR PARKWAY #301
MIRAMAR, FL. 33027
P: 305.271.0117
www.MCYEngineering.com
mcy@mcyengineering.com

ES-SGD2020 SLIDING GLASS DOOR (LMI & SMI)

ES WINDOWS, INC.
10653 NE Quayibridge Ct.
Miami, FL 33138
TEL. (305) 624-7775

Rev. No.	Date	Drawn By	REVISION	Description
R5	10.08.2024	James		

Drawn Date 10.08.2024

Scale

DRAWING NO.
AD16-29

D14

Sheet No.
50 OF 59

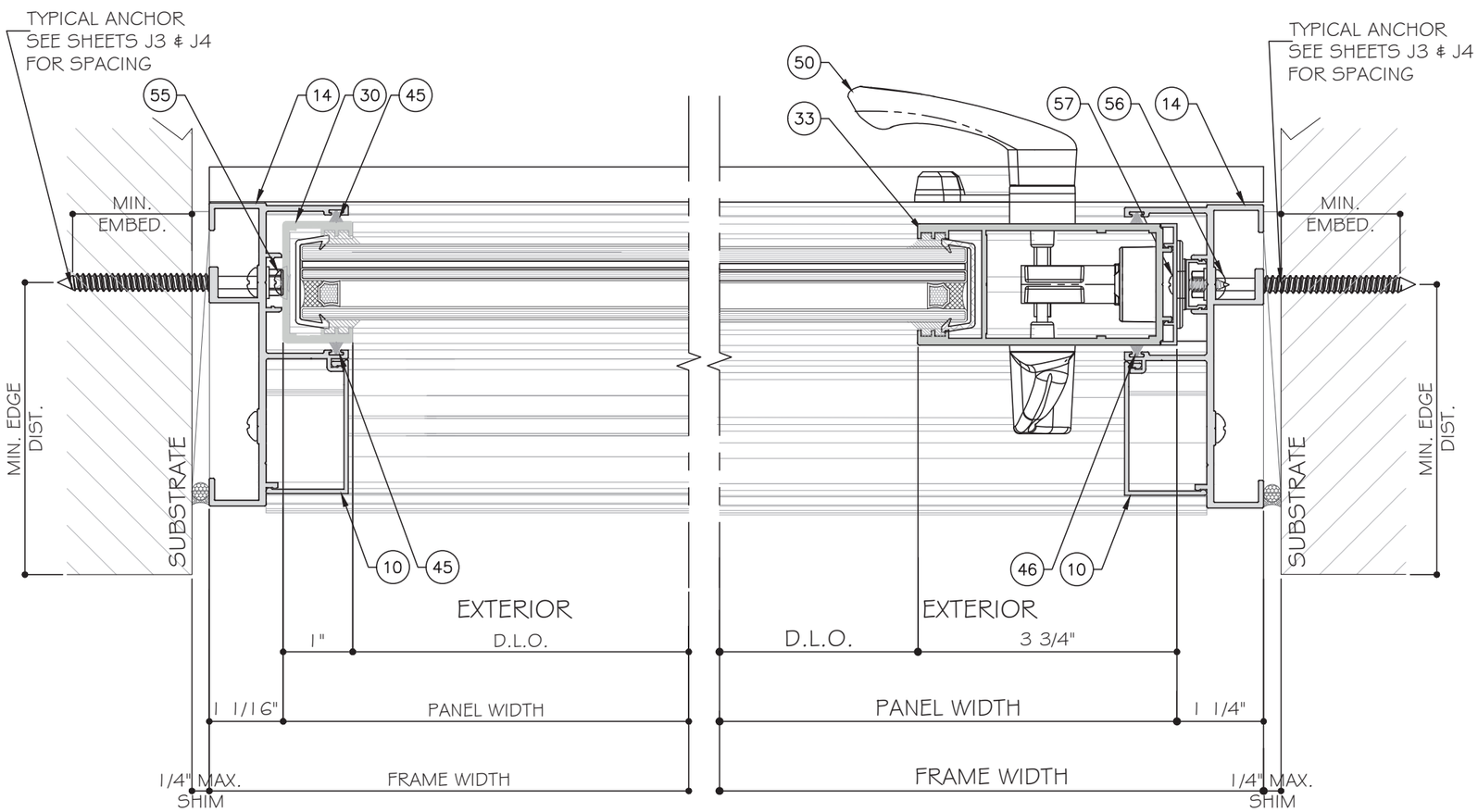

38 / D15 DETAIL

39 / D15 DETAIL

STANDARD INTERLOCK (LEVEL 1 OPTION 1) SHOWN.
SEE SHEET K1 FOR LEVEL 2 AND 3 REINFORCEMENT.

LOCK STILE OPTION 1 SHOWN. SEE SHEET E5 FOR OPTION 2.

TWO (2) TRACK DOOR DETAILS

YIJING WANG P.E.
FLORIDA REGISTRATION
No. #55983
C.A.N. 28677
STATE OF FLORIDA PROFESSIONAL ENGINEER
October 23rd, 2024

MCY ENGINEERING, INC.
GLAZING CONSULTANTS
12781 MIRAMAR PARKWAY #301
MIRAMAR, FL. 33027 P: 305.271.0117
www.MCYEngineering.com mcy@mcyengineering.com

ES-SGD2020 SLIDING GLASS DOOR (LMI & SMI)

ES WINDOWS, INC.
10653 NE Quaybridge Ct.
Miami, FL 33138
TEL. (305) 624-7775

Rev. No.	Date	Drawn By	Description
R5	10.08.2024	James	REVISION

Drawn Date 10.08.2024
Scale

DRAWING NO.
AD16–29

D15

Sheet No.
51 OF 59

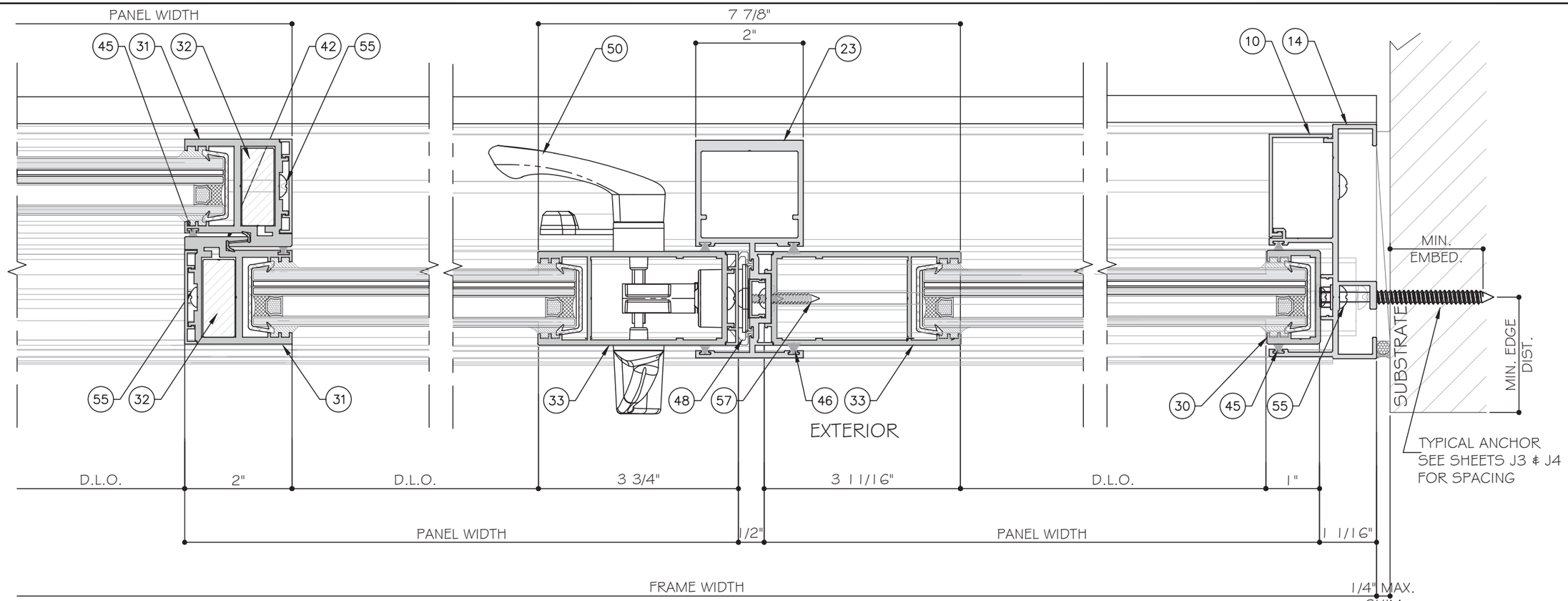

41 / D16 DETAIL

42 / D16 DETAIL

43 / D16 DETAIL

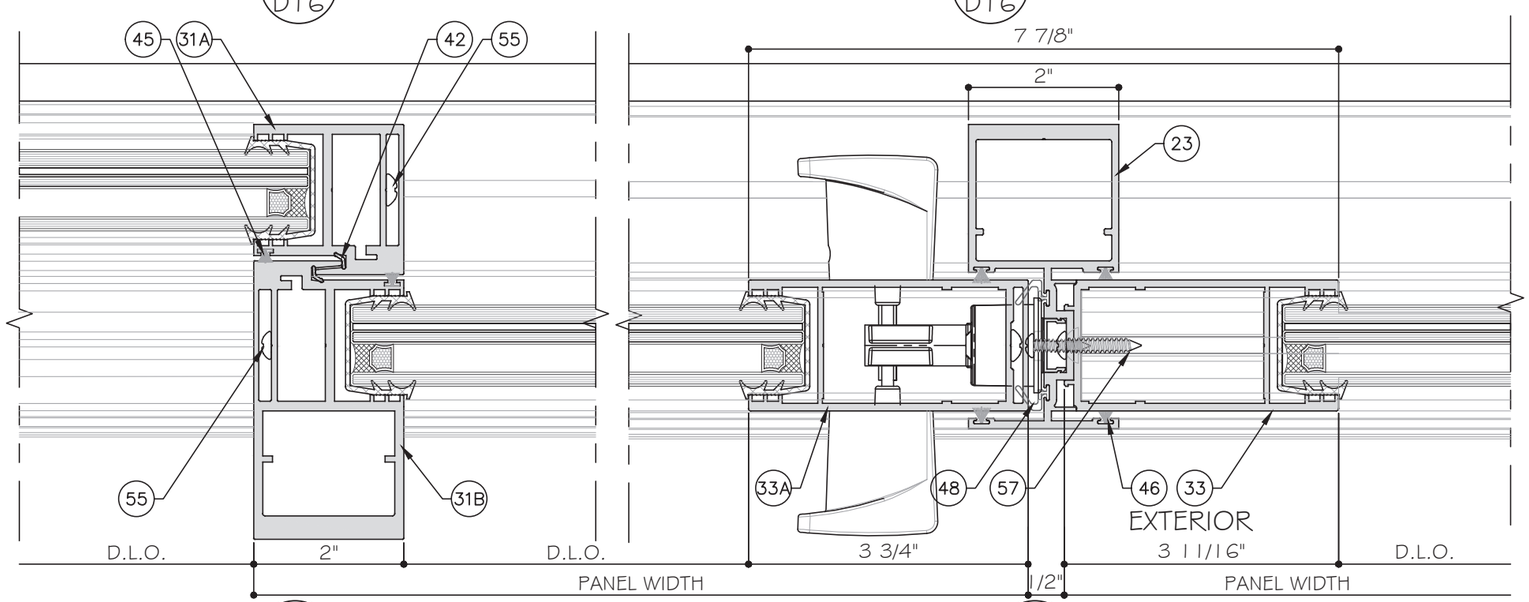

41 / D16 OPTION

42 / D16 OPTION

STANDARD INTERLOCK (LEVEL 1 OPTION 1) SHOWN. SEE SHEET K1 FOR LEVEL 2 AND 3 REINFORCEMENT.

LOCK STILE OPTION 1 SHOWN. SEE SHEET E5 FOR OPTION 2.

TWO (2) TRACK DOOR DETAILS

YIPING WANG, P.E.
FLORIDA REGISTRATION
No. #55983
C.A.N. 0000877
STATE OF FLORIDA PROFESSIONAL ENGINEER
October 23rd, 2024

MCY ENGINEERING, INC.
GLAZING CONSULTANTS
12781 MIRAMAR PARKWAY #301
MIRAMAR, FL. 33027 P: 305.271.0117
www.MCYEngineering.com mcy@mcyengineering.com

ES-SGD2020 SLIDING GLASS DOOR (LMI & SMI)

ES WINDOWS, INC.
10653 NE Quaybridge Ct.
Miami, FL 33138
TEL. (305) 624-7775

Rev. No.	Date	Drawn By	REVISION	Description
R3	10.08.2024	James		

Drawn Date	Scale
10.08.2024	

DRAWING NO.
AD16–29

D16

Sheet No.
52 OF 59

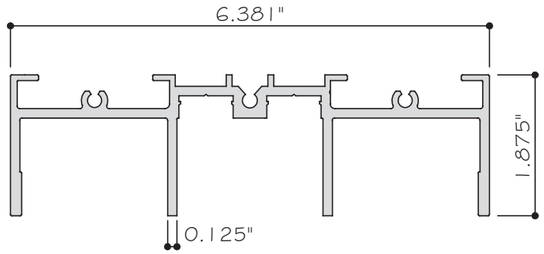

1 HEAD (3 TRACK)
ES-SGD2020-001 6063-T6

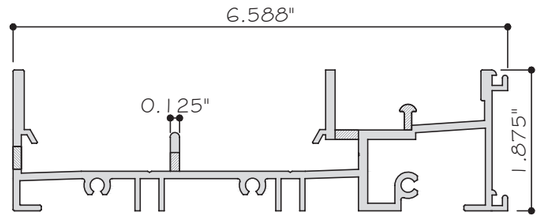

2 SILL (3 TRACK)
ES-SGD2020-002 6063-T6

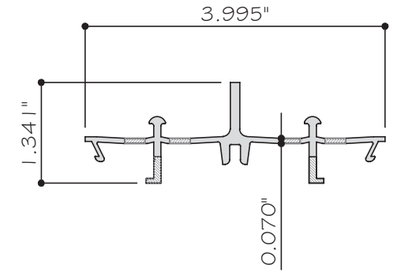

3 FRAME SILL COVER (3 TRACKS)
ES-SGD2020-003 6063-T6

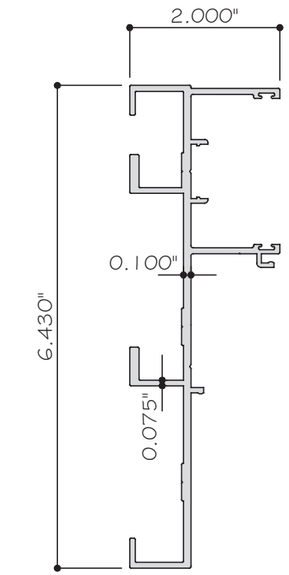

4 JAMB (3 TRACK)
ES-SGD2020-004 6063-T6

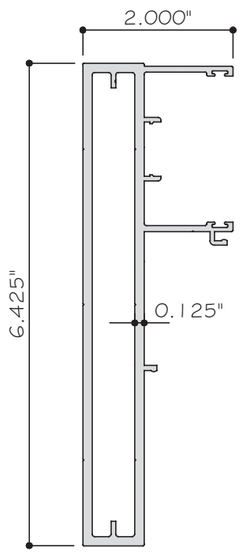

5 UNANCHORED JAMB (3 TRACK)
ES-SGD2020-005 6063-T6

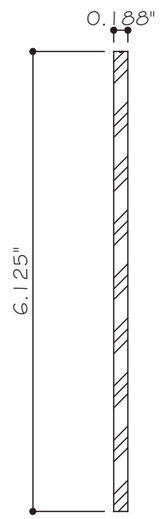

6 UNANCHORED JAMB REINF. FOR 3 TRACK
ES-SGD2020-006 6005-T5

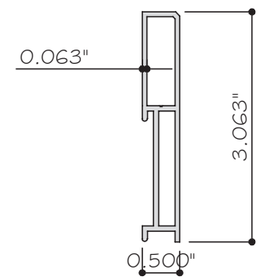

7 SILL RAISER 67PSF
ES-SGD2020-007 6063-T6

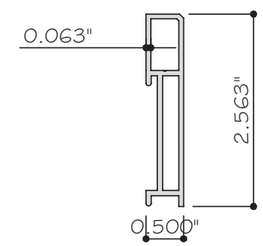

8 STANDARD SILL RAISER 53PSF
ES-SGD2020-008 6063-T6

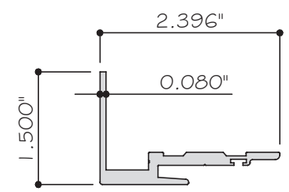

9 POCKET JAMB
ES-SGD2020-009 6063-T6

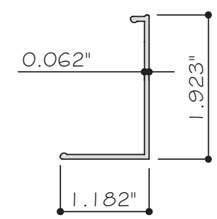

10 JAMB SCREW COVER
ES-SGD2020-010 6063-T6

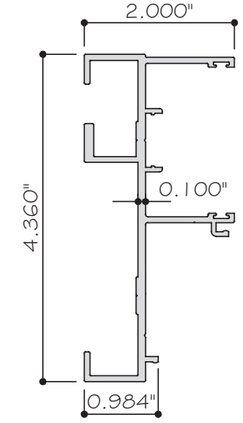

14 JAMB (2 TRACK)
ES-SGD2020-014 6063-T6

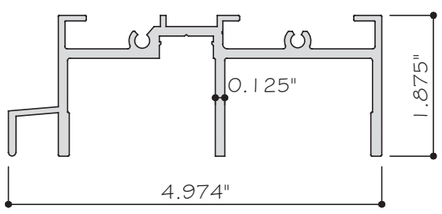

11 HEAD (2 TRACK)
ES-SGD2020-011 6063-T6

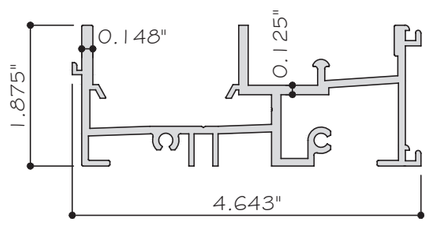

12 SILL (2 TRACK)
ES-SGD2020-012 6063-T6

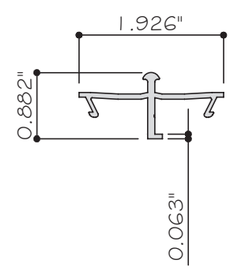

13 FRAME SILL COVER (2 TRACKS)
ES-SGD2020-013 6063-T6

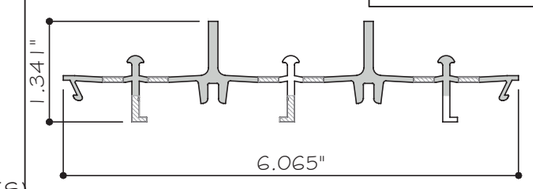

36 FRAME SILL COVER (4 TRACKS)
ES-SGD2020-013 6063-T6

YIPING WANG, P.E.
FLORIDA REGISTRATION
No. 55983
C.A.N. 0000677
STATE OF FLORIDA PROFESSIONAL ENGINEER
October 23rd, 2024

MCY ENGINEERING, INC.
GLAZING CONSULTANTS
12781 MIRAMAR PARKWAY #301
MIRAMAR, FL. 33027 P: 305.271.0117
www.MCYEngineering.com mcy@mcyengineering.com

ES-SGD2020 SLIDING GLASS DOOR (LMI & SMI)

ES WINDOWS, INC.
10653 NE Quaybridge Ct.
Miami, FL 33138
TEL. (305) 624-7775

Rev. No.	Date	Drawn By	REVISION	Description
R.0	10.08.2024	James		

Drawn Date 10.08.2024
Scale

DRAWING NO.
AD16–29

PARTS

Sheet No.
53 OF 59

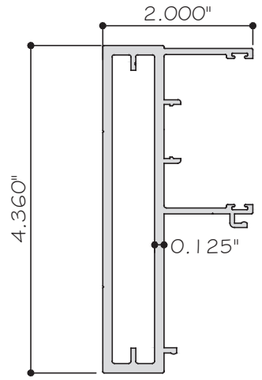

15 UNANCHORED JAMB (2 TRACK)
ES-SGD2020-015 6063-T6

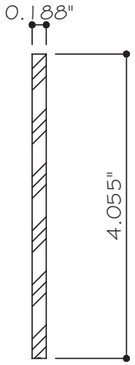

16 UN-ANCHORED JAMB REINF. FOR 2 TRACK
ES-SGD2020-016 6063-T6

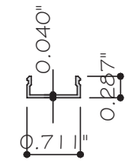

17 JAMB SCREW COVER
ES-6011 6063-T6

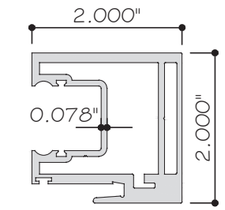

22A INTERLOCK FOR LAMINATED
ES-SGD2020-084 6005-T5

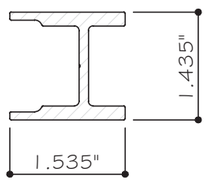

21 REINF. FOR INTERLOCK
ES-SGD2020-021 6005-T5

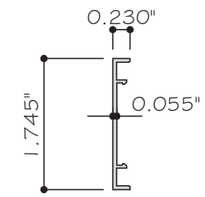

18 INTERLOCK AND LOCKSTILE SCREW COVER
ES-SGD2020-018 6063-T6

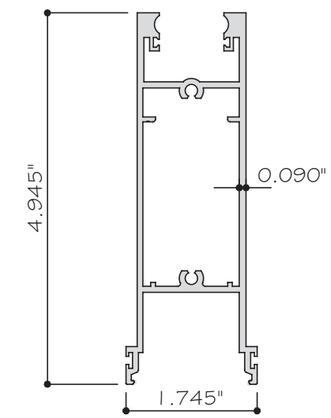

25 BOTTOM RAIL FOR LAMINATED GLASS
ES-SGD2020-025 6063-T6

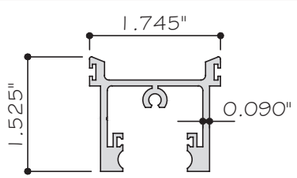

24 TOP RAIL FOR LAMINATED GLASS
ES-SGD2020-024 6063-T6

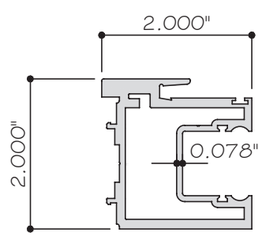

22 INTERLOCK FOR LAMINATED GLASS
ES-SGD2020-022 6063-T6

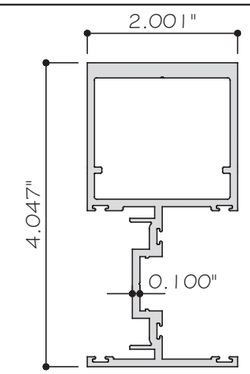

23 ASTRAGAL
ES-SGD2020-023 6063-T6

27A LOCKSTILE FOR LAMINATED
ES-SGD2020-088 6063-T6

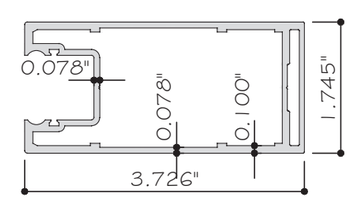

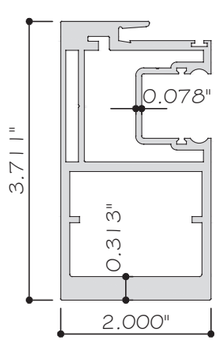

22B INTERLOCK HEAVY FOR LAMINATED
ES-SGD2020-085 6005-T5

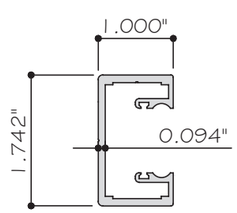

26 FIXED STILE FOR LAMINATED GLASS
ES-SGD2020-026 6063-T6

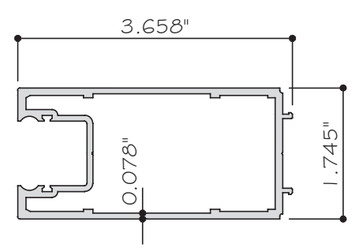

27 LOCK STILE FOR LAMINATED GLASS
ES-SGD2020-027 6063-T6

YIJING WANG
LICENSE
FLORIDA REGISTRATION
No 55983
C.A.N. 28677
STATE OF FLORIDA
PROFESSIONAL ENGINEER
October 23rd, 2024

MCY ENGINEERING, INC.
GLAZING CONSULTANTS
12781 MIRAMAR PARKWAY #301
MIRAMAR, FL. 33027 P: 305.271.0117
www.MCYEngineering.com mcy@mcyengineering.com

ES-SGD2020 SLIDING GLASS DOOR (LMI & SMI)

ES WINDOWS, INC.
10653 NE Quaybridge Ct.
Miami, FL 33138
TEL. (305) 624-7775

Rev. No.	Date	Drawn By	Description
R5	10.08.2024	James	REVISION

Drawn Date 10.08.2024
Scale

DRAWING NO.
AD16–29

PARTS

Sheet No.
54 OF 59

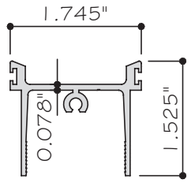

28 TOP RAIL FOR INSULATED LAMINATED
ES-SGD2020-028 6063-T6

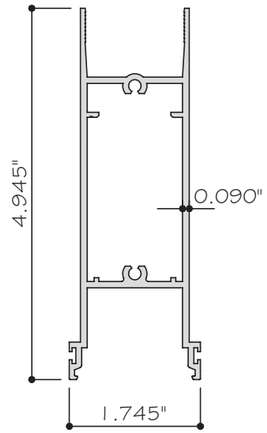

29 BOTTOM RAIL FOR INSULATED LAMINATED
ES-SGD2020-029 6063-T6

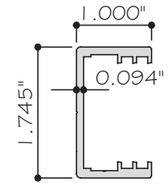

30 FIXED STILE FOR INSULATED LAMINATED
ES-SGD2020-030 6063-T6

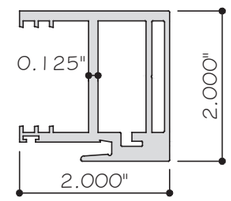

31A INTERLOCK FOR INSULATE LAMINATED
ES-SGD2020-087 6005-T5

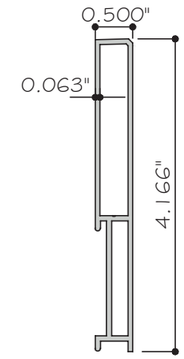

38 SILL RAISER - 90 PSF
ES-SGD2020-040 6063-T6

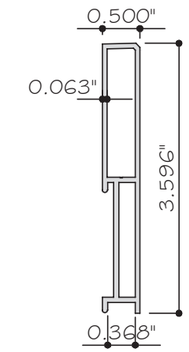

82 SILL RAISER - 80 PSF
ES-SGD2020-041 6063-T6

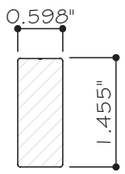

32 REINF. FOR INTERLOCK - INSULATED LAMINATED GLASS
ES-SGD2020-032 6005-T5

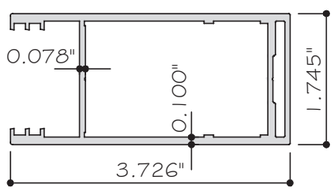

33A LOCKSTILE FOR INSULATE LAMINATED
ES-SGD2020-089 6063-T6

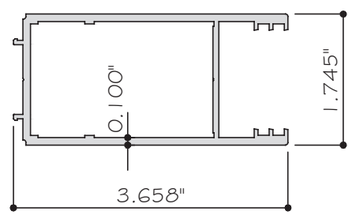

33 LOCK STILE FOR INSULATED LAMINATED GLASS
ES-SGD2020-033 6063-T6

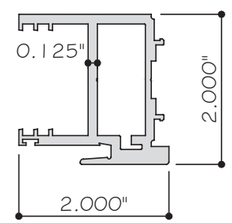

31 INTERLOCK FOR INSULATED LAMINATED GLASS
ES-SGD2020-031 6063-T6

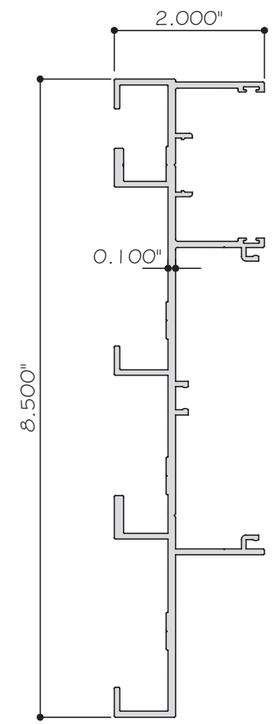

37 JAMB - 4 TRACK
ES-SGD2020-038 6063-T6

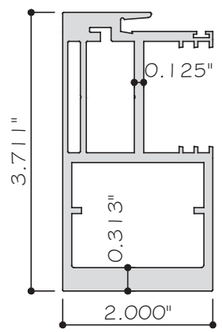

31B INTERLOCK HEAVY FOR INSULATE LAMINATED
ES-SGD2020-086
6005-T5

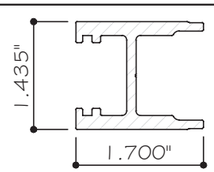

21A REINF. FOR INTERLOCK LAMINATED GLASS
ES-SGD2020-021A 6005-T5

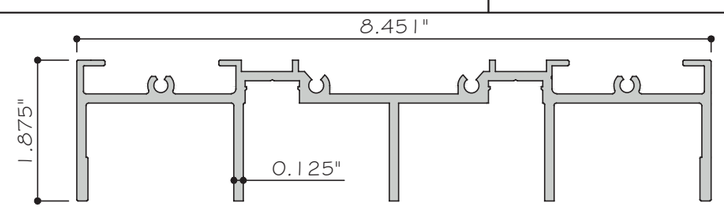

34 HEAD - 4 TRACK
ES-SGD2020-034 6063-T6

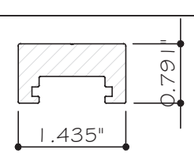

32A REINF. FOR INTERLOCK - INSULATED LAMINATED GLASS
ES-SGD2020-032A 6005-T5

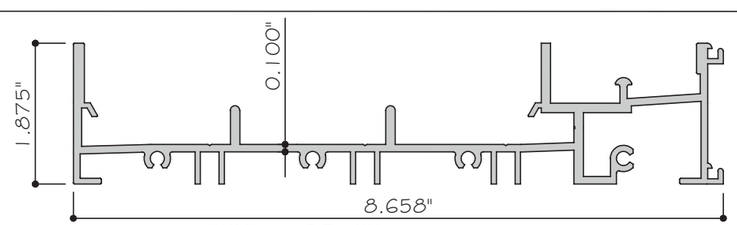

35 SILL - 4 TRACK
ES-SGD2020-035 6063-T6

MCY ENGINEERING, INC.
GLAZING CONSULTANTS
12781 MIRAMAR PARKWAY #301
MIRAMAR, FL. 33027 P: 305.271.0117
www.MCYEngineering.com mcy@mcyengineering.com

ES-SGD2020 SLIDING GLASS DOOR (LMI & SMI)

ES WINDOWS, INC.
10653 NE Quaybridge Ct.
Miami, FL 33138
TEL. (305) 624-7775

Rev. No.	Date	Drawn By	REVISION	Description
RJ	10.08.2024	James		

Drawn Date 10.08.2024
Scale

DRAWING NO.
AD16–29

PARTS

Sheet No.
55 OF 59

YIJING WANG P.E.
FLORIDA REGISTRATION
FL #55983
C.A.N. 28577
STATE OF FLORIDA PROFESSIONAL ENGINEER No 55983
October 23rd, 2024

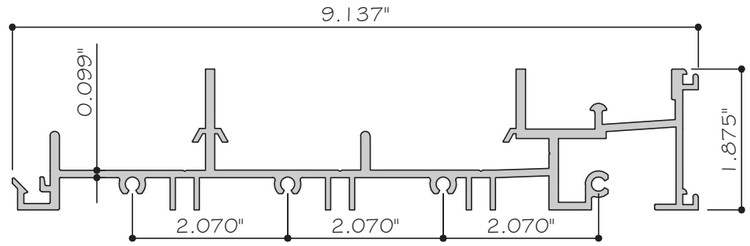

65 FRAME SILL - 5 TRACKS
ES-SGD2020-055 6063-T6

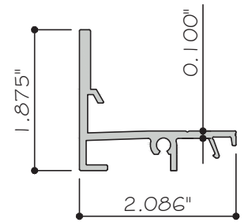

66 FRAME FRONT SILL
ES-SGD2020-054 6063-T6

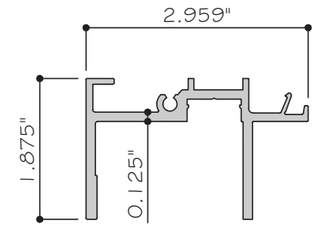

67 FRAME FRONT HEAD
ES-SGD2020-062 6063-T6

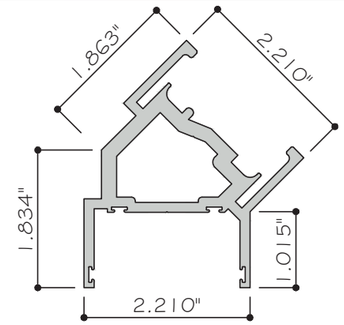

71 FRAME FRONT SILL
ES-SGD2020-056 6063-T6

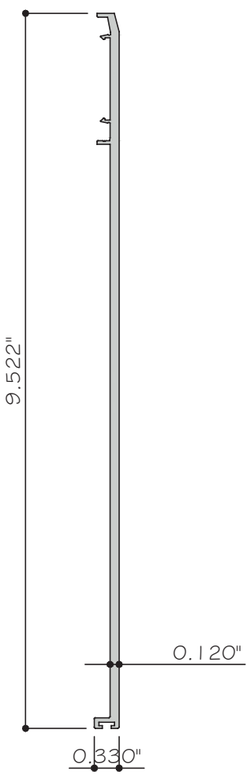

72 POCKET DOOR CLOSER - 5 TRACKS
ES-SGD2020-061 6063-T6

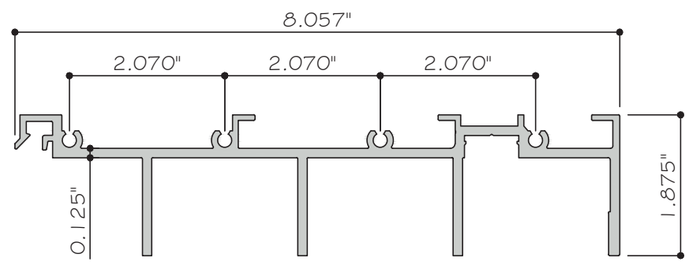

69 FRAME HEAD - 5 TRACKS
ES-SGD2020-063 6063-T6

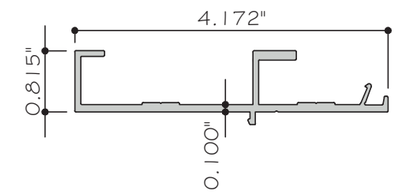

70 FRAME FRONT JAMB
ES-SGD2020-064 6063-T6

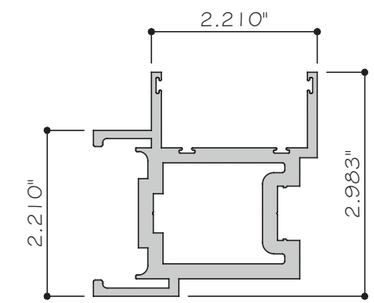

75 FRAME FRONT SILL
ES-SGD2020-068 6063-T6

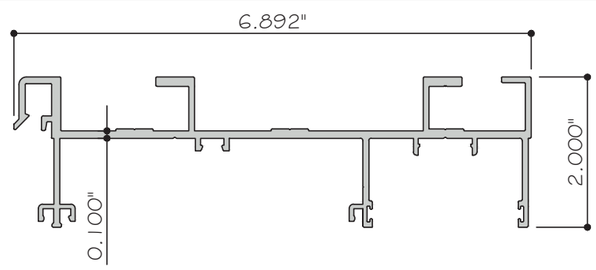

73 JAMB- 5 TRACKS
ES-SGD2020-065 6063-T6

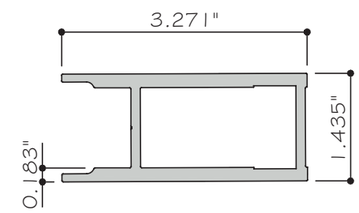

74 REINF. FOR LOCK STILE LAM. GLASS
ES-SGD2020-071 6063-T6

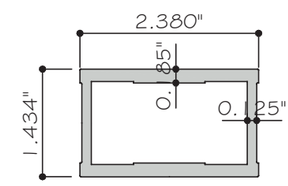

81 REINF. FOR LOCK STILE (INSL-LAM.)
ES-SGD2020-07X 6063-T6

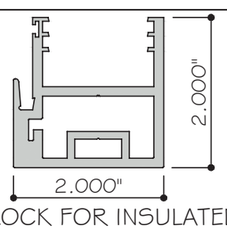

87A INTERLOCK FOR INSULATED LAMINATED GLASS
ES-SGD2020-087A 6005-T5

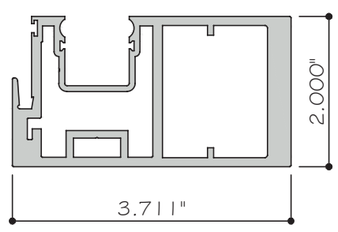

84A INTERLOCK HEAVY FOR LAMINATED GLASS
ES-SGD2020-084A 6005-T5

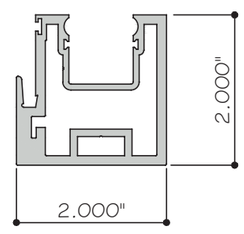

85A INTERLOCK FOR LAMINATED GLASS
ES-SGD2020-085A
6005-T5

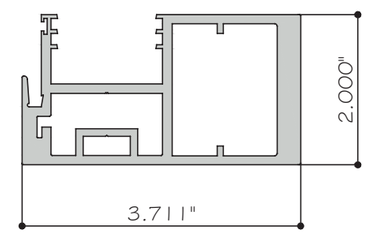

86A INTERLOCK HEAVY FOR INSULATED LAMINATED GLASS
ES-SGD2020-086A
6005-T5

YIPING WANG, P.E.
FLORIDA REGISTRATION
FL #55983
C.A.N. 28677
No 55983
STATE OF FLORIDA
PROFESSIONAL ENGINEER
October 23rd, 2024

MCY ENGINEERING, INC.
GLAZING CONSULTANTS
12781 MIRAMAR PARKWAY #301
MIRAMAR, FL. 33027 P: 305.271.0117
www.MCYEngineering.com mcy@mcyengineering.com

ES-SGD2020 SLIDING GLASS DOOR (LMI & SMI)

ES WINDOWS, INC.
10653 NE Quaybridge Ct.
Miami, FL 33138
TEL. (305) 624-7775

Rev. No.	Date	Drawn By	REVISION	Description
RJS	10.08.2024	James		

Drawn Date 10.08.2024
Scale

DRAWING NO.
AD16–29

PARTS

Sheet No.
56 OF 59

BILL OF MATERIALS

ITEM	PART	DESCRIPTION	MATERIAL	REMARKS
1	ES-SGD2020-001	HEAD (3 TRACK)	6063-T6	-
2	ES-SGD2020-002	SILL (3 TRACK)	6063-T6	-
3	ES-SGD2020-003	FRAME SILL COVER	6063-T6	-
4	ES-SGD2020-004	JAMB (3 TRACK)	6063-T6	-
5	ES-SGD2020-005	FREESTANDING JAMB (3 TRACK)	6063-T6	-
6	ES-SGD2020-006	UN-ANCHORED JAMB REINFORCEMENT FOR 3 TRACK	6005-T5	-
7	ES-SGD2020-007	HI SILL RAISER 3-1/16" HEIGHT	6063-T6	-
8	ES-SGD2020-008	STANDARD SILL RAISER 2-9/16" HEIGHT	6063-T6	-
9	ES-SGD2020-009	POCKET JAMB	6063-T6	-
10	ES-SGD2020-010	JAMB SCREW COVER	6063-T6	-
11	ES-SGD2020-011	HEAD 2 TRACK	6063-T6	-
12	ES-SGD2020-012	SILL 2 TRACK	6063-T6	-
13	ES-SGD2020-013	FRAME SILL COVER	6063-T6	-
14	ES-SGD2020-014	JAMB (2 TRACK)	6063-T6	-
15	ES-SGD2020-015	FREESTANDING JAMB (2 TRACK)	6063-T6	-
16	ES-SGD2020-016	FREESTANDING JAMB REINFORCEMENT FOR 2 TRACK	6063-T6	-
17	ES-6011	JAMB SCREW COVER	6063-T6	-
18	ES-SGD2020-018	INTERLOCK AND LOCK STILE SCREW COVER	6063-T6	-
19	NOT USED	-	-	-
20	NOT USED	-	-	-
21	ES-SGD2020-021	REINFORCEMENT FOR INTERLOCK	6005-T5	-
21A	ES-SGD2020-021A	REINFORCEMENT FOR INTERLOCK LAMINATED GLASS	6005-T5	-
22	ES-SGD2020-022	INTERLOCK FOR LAMINATED GLASS	6005-T5	-
22A	ES-SGD2020-084	INTERLOCK FOR LAMINATED GLASS	6005-T5	-
22B	ES-SGD2020-085	INTERLOCK HEAVY FOR LAMINATED GLASS	6005-T5	-
23	ES-SGD2020-023	ASTRAGAL	6005-T5	-
24	ES-SGD2020-024	TOP RAIL FOR LAMINATED GLASS	6063-T6	-
25	ES-SGD2020-025	BOTTOM RAIL FOR LAMINATED GLASS	6063-T6	-
26	ES-SGD2020-026	FIXED STILE FOR LAMINATED GLASS	6063-T6	-
27	ES-SGD2020-027	LOCK STILE FOR LAMINATED GLASS	6063-T6	-
27A	ES-SGD2020-088	LOCK STILE FOR LAMINATED GLASS	6063-T6	-
28	ES-SGD2020-028	TOP RAIL FOR INSULATED LAMINATED GLASS	6063-T6	-
29	ES-SGD2020-029	BOTTOM RAIL FOR INSULATED GLASS	6063-T6	-
30	ES-SGD2020-030	FIXED STILE FOR INSULATED LAMINATED GLASS	6063-T6	-
31	ES-SGD2020-031	INTERLOCK FOR INSULATED LAMINATED GLASS	6063-T6	-
31A	ES-SGD2020-087	INTERLOCK FOR INSULATED LAMINATED GLASS	6005-T5	-
31B	ES-SGD2020-086	INTERLOCK HEAVY FOR INSULATED LAMINATED GLASS	6005-T5	-
32	ES-SGD2020-032	REINFORCEMENT FOR INTERLOCK INSULATED LAM. GLASS	6005-T5	-
32A	ES-SGD2020-032A	REINFORCEMENT FOR INTERLOCK INSULATED LAM. GLASS	6005-T5	-
33	ES-SGD2020-033	LOCK STILE FOR INSULATED LAMINATED GLASS	6063-T6	-
33A	ES-SGD2020-089	LOCK STILE FOR INSULATED LAMINATED GLASS	6063-T6	-
34	ES-SGD2020-034	HEAD (4 TRACK)	6063-T6	-
35	ES-SGD2020-035	SILL (4 TRACK)	6063-T6	-
36	ES-SGD2020-036	FRAME SILL COVER (4 TRACK)	6063-T6	-
37	ES-SGD2020-037	JAMB (4 TRACK)	6063-T6	-
38	ES-SGD2020-040	SILL RAISER 4-3/16" HEIGHT	6063-T6	-
39	ES2020-G01	GLAZING GASKET FOR LAMINATED GLASS	SILICONE, DURO 70	-
40	ES2020-G02	GLAZING GASKET FOR LAMINATED GLASS	SILICONE, DURO 70	-
41	ES2020-G03	GLAZING GASKET FOR INSULATED LAMINATED GLASS	SILICONE, DURO 70	-
42	ES2020-G04	INTERLOCK BUMPER	BLACK PVC, 60 SHORE D	-
43	ES2020-G05	GLAZING GASKET FOR INSULATED LAMINATED GLASS	SILICONE, DURO 70	-
44	W23221NG	SILL, HEAD PILE	POLYPROPYLENE	-
45	W23171NK	INTERLOCK PILE	POLYPROPYLENE	-
46	W23211NG	INTERLOCK ASTRAGAL	POLYPROPYLENE	-
47	WA2L	WEEPHOLE COVER	POLYPROPYLENE	-
48	QEZ 447-1	QLON	FOAM ALL STRUCTURE	-
49	PS01-0035-00B	RECESSED FACEPLATE SBML LOCK TWO POINT	-	

BILL OF MATERIALS

ITEM	PART	DESCRIPTION	MATERIAL	REMARKS
50	PS01-0035-00B	INVOLUTE HANDLE SET	-	-
	PS01-0014-000			-
	PS01-0014-00B			-
	PS01-0014-117			-
51	PS01-1005-00B	ADJUSTABLE STRIKE	POLYPROPYLENE	-
	PS01-0060-000 2P			-
52	-	BUMPER BASE AND SNAP FIT	STEEL AND RUBBER	-
53	1986-PRN-3000SS	ROLLER	STAINLESS STEEL	-
54	GTT-15006-HKA-01-TE	ROLLER	-	ZAMAK
55	-	#10 X 7/8" P.H. SCREW FOR PANEL ASSEMBLY	ST/ST	-
56	-	#12 X 1-1/2" P.H. SCREW FOR FRAME ASSEMBLY	ST/ST	-
57	-	#8 X 3/4" P.H. SCREW FOR HANDLE STRIKE	ST/ST	-
58	-	#10 X 1" F.H. SCREW FOR MORTISE LOCK	ST/ST	-
59	-	#12 X 1" P.H. SCREW FOR BUMPER	ST/ST	-
60	-	#10 X 1" P.H. SCREW	ST/ST	-
60A	-	#10 X 1/2" P.H. SCREW	ST/ST	-
61	-	1/4-20 X 2-1/2" PAN HEAD SCREW	ST/ST	-
62	DC983	DOW CORNING 983 STRUCTURAL SILICONE	SILICONE	-
63	DC791	DOW CORNING 791	SILICONE	-
64	-	GLAZING SPACER	ALUMINUM	HELIMA
65	ES-SGD2020-055	FRAME SILL- 5 TRACKS	6063-T6	-
66	ES-SGD2020-054	FRAME FRONT SILL	6063-T6	-
67	ES-SGD2020-062	FRAME FRONT HEAD	6063-T6	-
68	ES-SGD2020-021	INTERLOCK REINF. FOR LAMINATED GLASS	6063-T5	-
69	ES-SGD2020-063	FRAME HEAD - 5 TRACKS	6063-T6	-
70	ES-SGD2020-064	FRAME FRONT JAMB	6005-T5	-
71	ES-SGD2020-056	FRAME FRONT SILL	6063-T6	-
72	ES-SGD2020-061	POCKET DOOR CLOSER - 5 TRACKS	6063-T6	-
73	ES-SGD2020-065	JAMB - 5 TRACK	6063-T6	-
74	ES-SGD2020-071	REINF. FOR LOCK STILE LAM. GLASS	6063-T6	-
75	ES-SGD2020-068	FRAME FRONT SILL	6063-T6	-
76	ALU-P-018	SUPPORT FOR HANDLE LOCK	6063-T6	-
77	ALU-P-020	SUPPORT FOR HANDLE LOCK	6063-T6	-
78	ES-W525-014	COVER -POCKET	6063-T5	-
79	ES-SGD2020-069	HOOK STRIP BASE	6063-T6	-
80	ES-SGD2020-070	HOOK STRIP	6063-T6	
81	ES-SGD2020-07X	REINFORCE FOR LOCK STILE (INSUL-LAM)	6063-T6	-
82	ES-SGD2020-041	SILL RAISER	6063-T6	-
83	-	# 10 X 3/8" P.H. TYP B	STAINLESS STEEL	-
84A	ES-SGD2020-084A	INTERLOCK HEAVY FOR LAMINATED GLASS	6005-T5	-
85A	ES-SGD2020-085A	INTERLOCK FOR LAMINATED GLASS	6005-T5	-
86A	ES-SGD2020-086A	INTERLOCK HEAVY FOR INSULATED LAMINATED GLASS	6005-T5	-
87A	ES-SGD2020-087A	INTERLOCK FOR INSULATED LAMINATED GLASS	6005-T5	-
88	D4304AMK.430"X1.00"X.370"	FOR (SLIDING PANEL) INTERLOCK AT SILL AND HEAD	POLYPROPYLENE	-
89	D5009AMK .500"X2.25"X.870"	FOR (SLIDING PANEL) INTERLOCK AT SILL AND HEAD	POLYPROPYLENE	-

YAYING WANG
FLORIDA REGISTRATION
PE #55983
C.A.N. 28677
No 55983
STATE OF FLORIDA
PROFESSIONAL ENGINEER
October 23rd, 2024

MCY ENGINEERING, INC.
GLAZING CONSULTANTS
12781 MIRAMAR PARKWAY #301
MIRAMAR, FL. 33027 P: 305.271.0117
www.MCYEngineering.com mcy@mcyengineering.com

ES-SGD2020 SLIDING GLASS DOOR (LMI & SMI)

ES WINDOWS, INC.
10653 NE Quaybridge Ct.
Miami, FL 33138
TEL. (305) 624-7775

Rev. No.	Date	Drawn By	REVISION	Description
RJS	10.08.2024	James		

Drawn Date 10.08.2024
Scale

DRAWING NO.
AD16-29

BOM

Sheet No.
57 OF 59

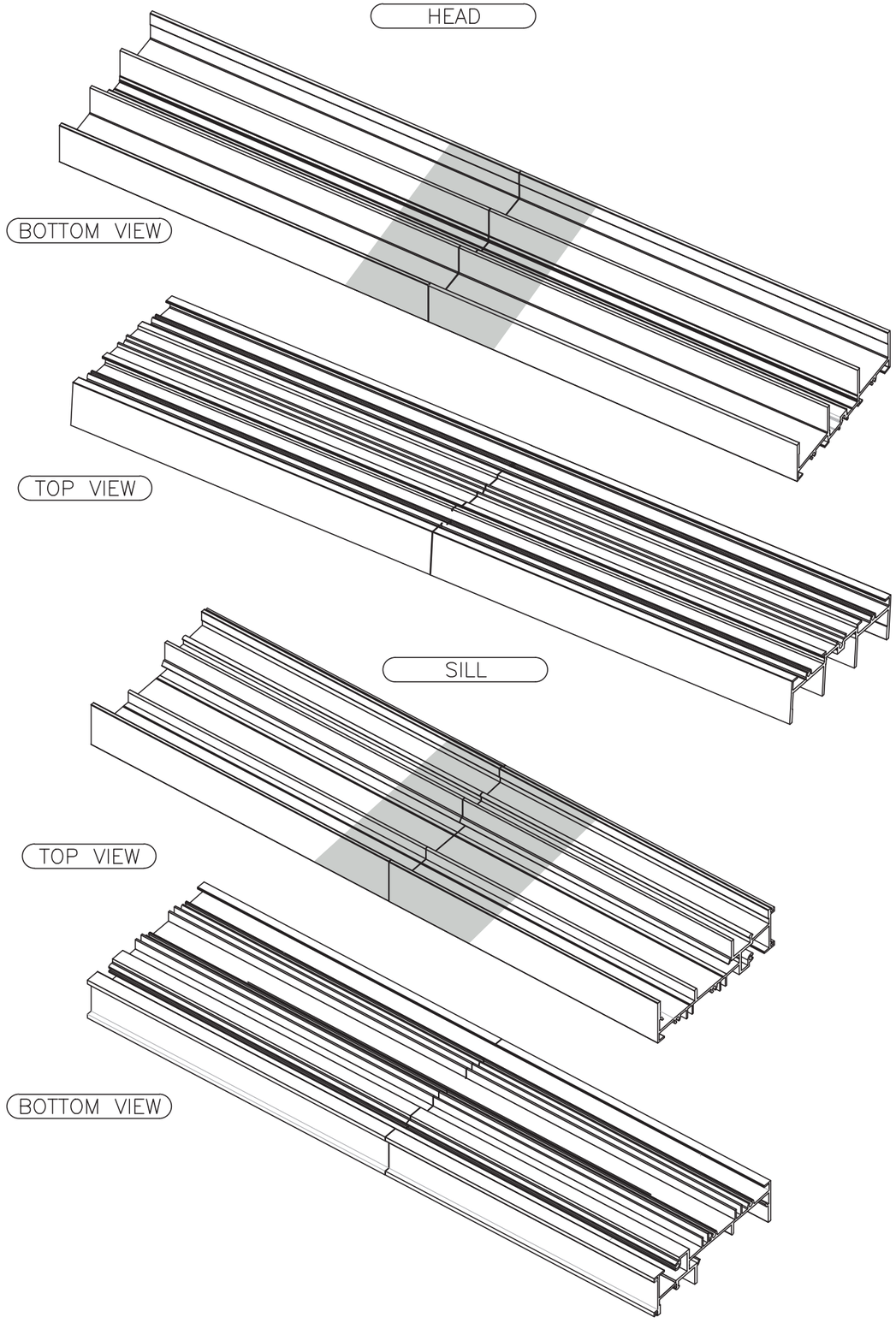

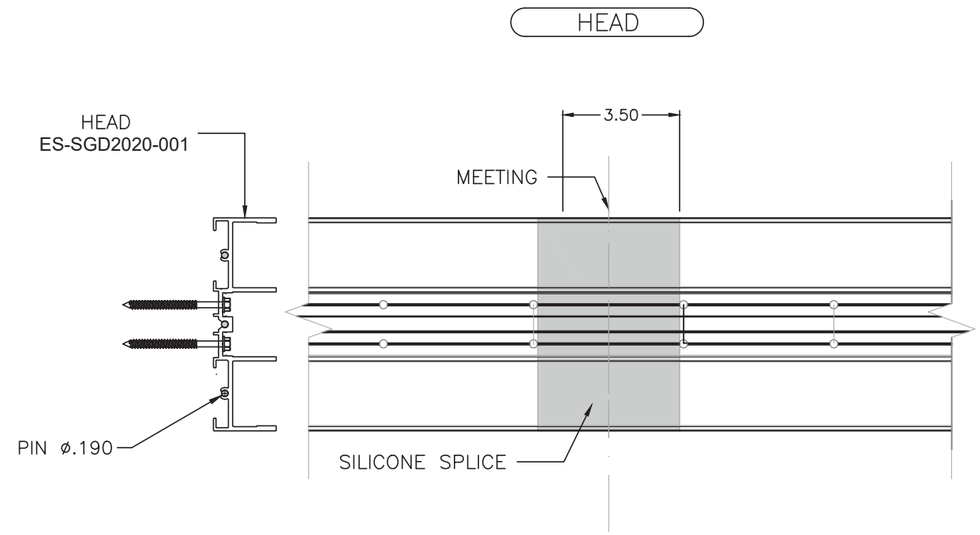

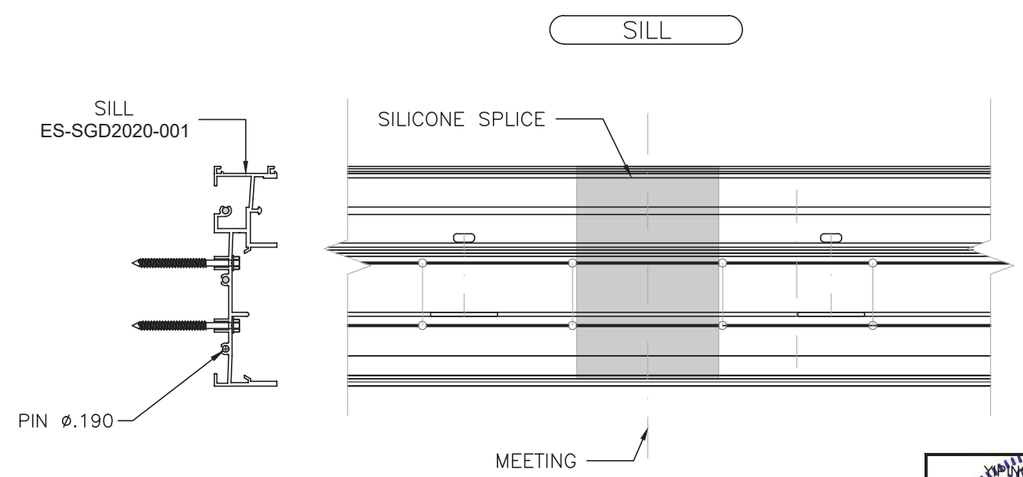

MCY ENGINEERING, INC.
GLAZING CONSULTANTS
12781 MIRAMAR PARKWAY #301
MIRAMAR, FL. 33027 P: 305.271.0117
www.MCYEngineering.com mcy@mcyengineering.com

ES-SGD2020 SLIDING GLASS DOOR (LMI & SMI)

ES WINDOWS, INC.
10653 NE Quaybridge Ct.
Miami, FL 33138
TEL. (305) 624-7775

Rev. No.	Date	Drawn By	REVISION	Description
R5	10.08.2024	James		

Drawn Date	Scale
10.08.2024	

DRAWING NO.
AD16–29

ISO

Sheet No.
58 OF 59

YIQING WANG P.E.
FLORIDA REGISTRATION
FL #55983
C.A.N. 28677
STATE OF FLORIDA PROFESSIONAL ENGINEER No 55983

October 23rd, 2024

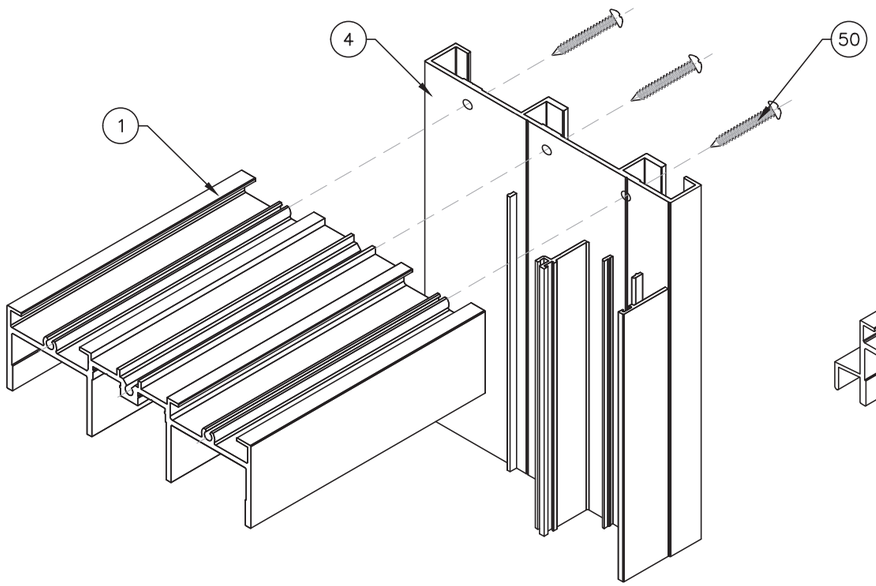

FRAME TOP CORNER
3 TRACK SHOWN

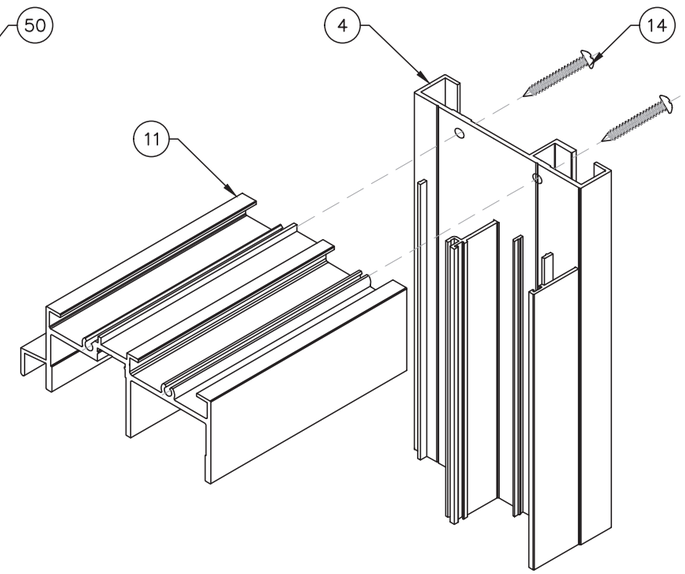

FRAME TOP CORNER
2 TRACK SHOWN

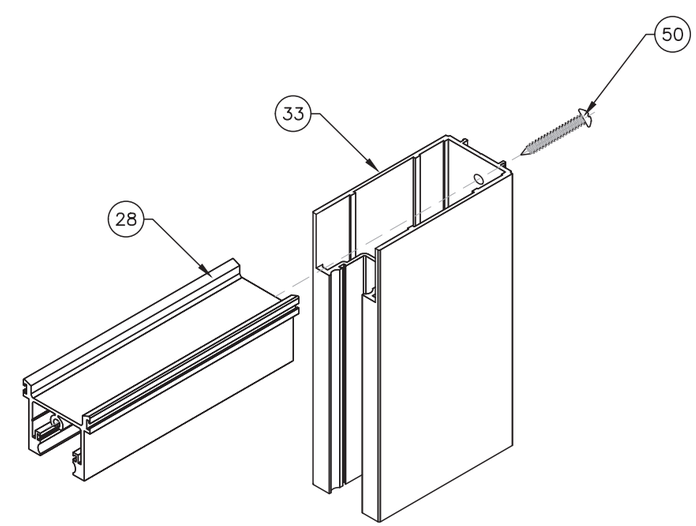

PANEL TOP CORNER

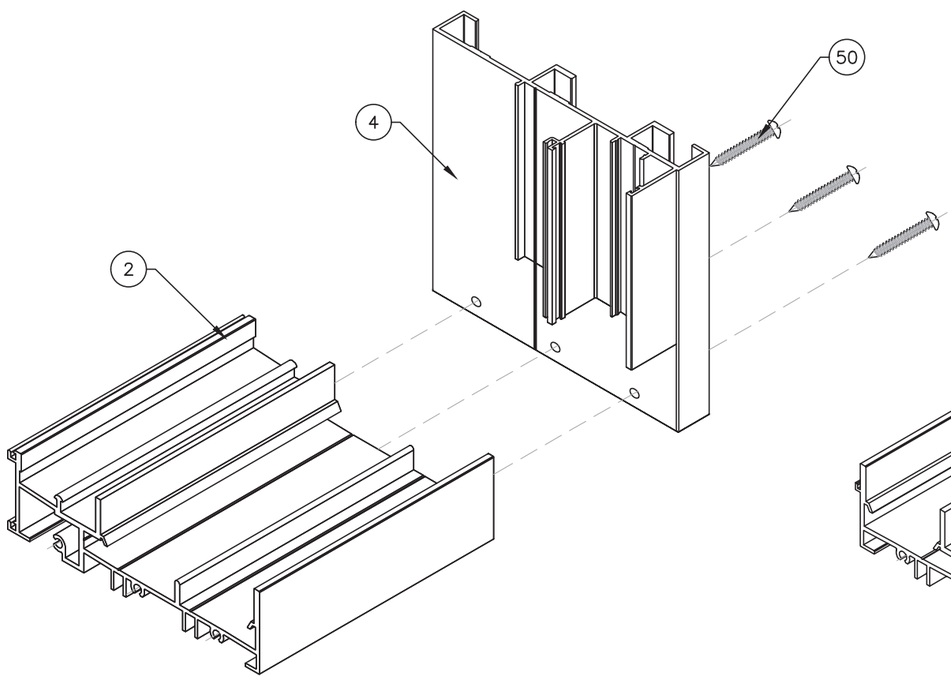

FRAME BOTTOM CORNER
3 TRACK SHOWN

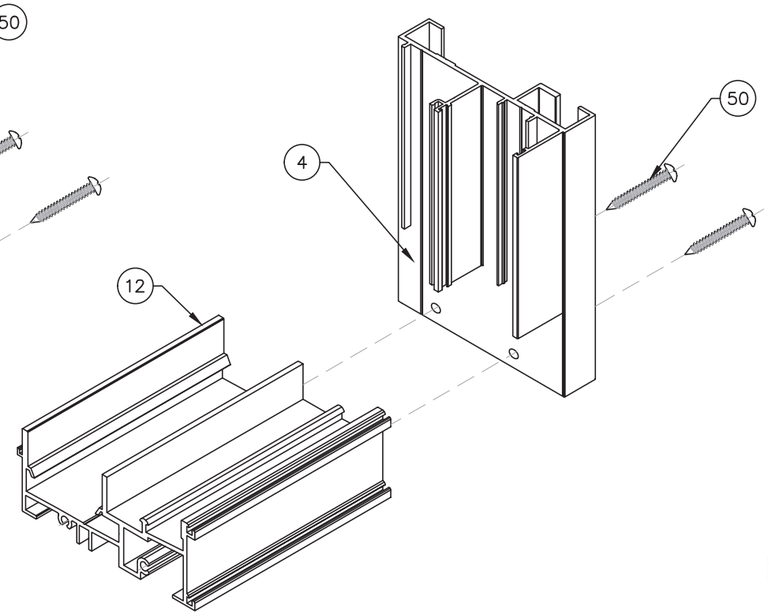

FRAME BOTTOM CORNER
2 TRACK SHOWN

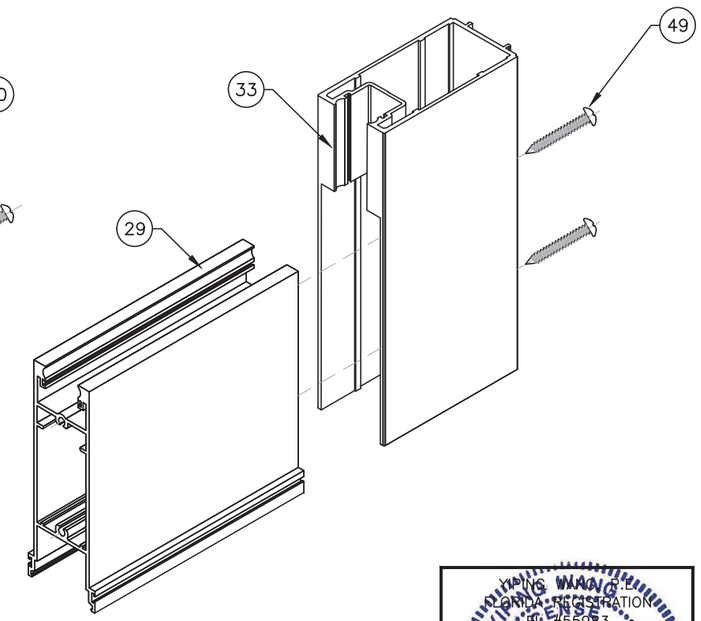

PANEL BOTTOM CORNER

YIANG WANG P.E.
FLORIDA REGISTRATION
LICENSE
No 55983
C.A.N. 28677
STATE OF FLORIDA
PROFESSIONAL ENGINEER
October 23rd, 2024

MCY ENGINEERING, INC.
GLAZING CONSULTANTS
12781 MIRAMAR PARKWAY #301
MIRAMAR, FL. 33027
P: 305.271.0117
www.MCYEngineering.com mcy@mcyengineering.com

ES-SGD2020 SLIDING GLASS DOOR (LMI & SMI)

ES WINDOWS, INC.
10653 NE Quaybridge Ct.
Miami, FL 33138
TEL. (305) 624-7775

Rev. No.	Date	Drawn By	Description
R5	10.08.2024	James	REVISION

Drawn Date 10.08.2024

Scale

DRAWING NO.
AD16–29

ISO

Sheet No.
59 OF 59