Wind Load Calculations

for

Playground Equipment

at

Gary Matzner Park
6610 N Kendall Dr. Pinecrest, FL

DoubleDay Engineering, LLC
95 Merrick Way 3rd Floor
Coral Gables FL 33134
RODOBALDO DUARTES 83226

Rodobaldo Duartes

Digitally signed by Rodobaldo Duartes
Date: 2025.11.17 11:46:05 -05'00'

RODOBALDO DUARTES
LICENSE
No 83226
STATE OF FLORIDA
PROFESSIONAL ENGINEER

Table of Contents

Design Parameters 3

Design Method 4

1. Vertical Wind Loading (Uplift) 4
2. Horizontal Wind Loading (Overturning) 5

Foundation Design Schedule 6

Foundation Calculations Summary 10

Foundation Detailed Calculations 12

Appendices 13

Appendix (I) 14

Appendix (II) 17

Appendix (III) 135

Appendix (IV) 144

Design Parameters

Materials Parameters

γ_{Soil}	110	*lb/ft³*
ϕ_{Soil}	30	*o*
BC	1500	*Psf*
K_a	0.3	
K_p	3	
K_0	0.50	
μ	0.364	
$\gamma_{Concrete}$	144	*lb/ft³*
fc'	3000	*psi*

Wind Load Parameters

Risk Cat.	II		See FBC 8th ED. Section 1604.5 Risk category.
Exposure	C		Wind Exposure, See FBC 8th ED. Section 1620.3.
V_{ult}	175	*mph*	Ultimate design Wind Speed, See FBC 8th ED. Section 1620.2.
V_{asd}	**136**	***mph***	Nominal Wind Speed, See FBC 8th ED. Section 1609.3.1, Equation 16-17, V_{asd}=V_{ult}*(0.6)^0.5
K_z	0.9		Exposure Coefficient, See ASCE 7-22, Table 26.10-1 (Max Height = 18 ft)
K_{zt}	1		Topographic Factor, ASCE 7-22, See Section 26.6
K_e	1		Gound Elevation Factor, ASCE 7-22, See Section 26.9
q_z	**42.3**	***lb/ft²***	Velocity Pressure, ASCE7-22, Equation 26.10-1, P=0.00256*Kz*Kzt*Ke*V^2
K_d	0.85		Wind Directionality Factor, See ASCE 7-22, Section 26.6
G	0.85		Gust-Effect Factor, See ASCE 7-22, Section 26.11
C_f	2		Force Coefficients from ASCE7-22, Figure 29.4-2
P	**61.2**	***lb/ft²***	Design Wind Pressure, Based on ASCE 7-22 Equation 29.4-1, F=qz*Kd*G*Cf

Design Method

For this equipment, two wind loading conditions have been analyzed:

1. **Uplift (Vertical Wind Loading)**
2. **Overturning (Horizontal Wind Loading)**

1. Vertical Wind Loading (Uplift)

In this condition, the vertical uplift forces induced by wind are compared to the self-weight of the foundation.

- **Uplifting Force**
  The total uplifting force is calculated as:

  *Uplifting Force (lb.) = (Horizontal Surface Area) * (Design Pressure)*

- **Resisting Force**
  The resisting force is taken as the total weight of the concrete footings supporting the equipment:

  Resisting Force (lb.) = Σ (Foundation Self-Weight)

- **Factor of Safety**
  The factor of safety against uplift is given by:

  Uplift FOS = (Resisting Force) / (Uplifting Force)

Note:

Self-weight of the equipment has been neglected in this calculation. Inclusion of either would result in a higher factor of safety.

(Refer to **Appendix (I)** for detailed Illustration.)

2. Horizontal Wind Loading (Overturning)

In this condition, the lateral wind forces acting on the equipment are evaluated to ensure stability against overturning.

- **Method of Analysis**
  Stability is checked by summing moments of all forces about a reference point **M** (typically the toe of the footing / structure).
- **Resisting Moment**
  Provided by the self-weight of the foundation and equipment, acting at their respective lever arms relative to point **M**.

  *Resisting Moment (lb.-ft) = Σ [(Total Weight * (Distance to Datum)]*

- **Overturning Moment**
  Produced by the wind force acting at its resultant height above point **M**.

  *Overturning Moment (lb.-ft) = Σ [(Vertical Surface Area) * (Design Pressure) * (Mean Height) + (Horizontal Surface Area) * (Design Pressure) * (Distance to Datum)]*

- **Factor of Safety**
  The factor of safety against overturning is expressed as:

  Overturning FOS = (Resisting Moment) / (Overturning Moment)

(Refer to **Appendix (I)** for detailed Illustration.)

Foundation Design Schedule

Engineered Footings					
#	Equipment	Footer Dimensions	Footer Reinf.	Concrete Grade	Conc. Vol. (ft^3)
A	**Warlock's Escape** **NRC400101-1001**	Ø15" × 54" Ø18" × 36" Ø20" × 54" Ø24" × 42" Ø24" × 48" Ø30" × 36" Ø39" × 54" 24" × 30" × 36" 24" × 30" × 48" 30" × 30" × 48"	-	3,000 psi (C25/30)	566.4
B	**Spinner Bowl** **ELE400024-3717BL**	Ø18" × 30"	-	3,000 psi (C25/30)	4.4
C	**Waterlilies** **NRO820-0601**	Ø12" × 24"	-	3,000 psi (C25/30)	7.9
D	**Tree Climber** **NRO834-1001**	32" × 32" × 28" @ Edges 48" × 48" × 28" @ Center	-	3,000 psi (C25/30)	203.3
E	**Stilts** **NRO806-0601**	10" × 24" × 28"	-	3,000 psi (C25/30)	23.3
F	**Parkour 5** **NRO857-1003**	Ø24" × 40" Ø30" × 40" Ø30" × 42" 10" × 20" × 28" 20" × 24" × 40" 20" × 30" × 40" 20" × 36" × 40"	-	3,000 psi (C25/30)	228.8
G	**Birds Nest Swing** **NRO911-1101**	18" × 30" × 43"	-	3,000 psi (C25/30)	53.8

Rodobaldo Duartes

Digitally signed by Rodobaldo Duartes
Date: 2025.11.17 17:48:24 -05'00'

A. Warlock's Escape (NRC400101-1001)

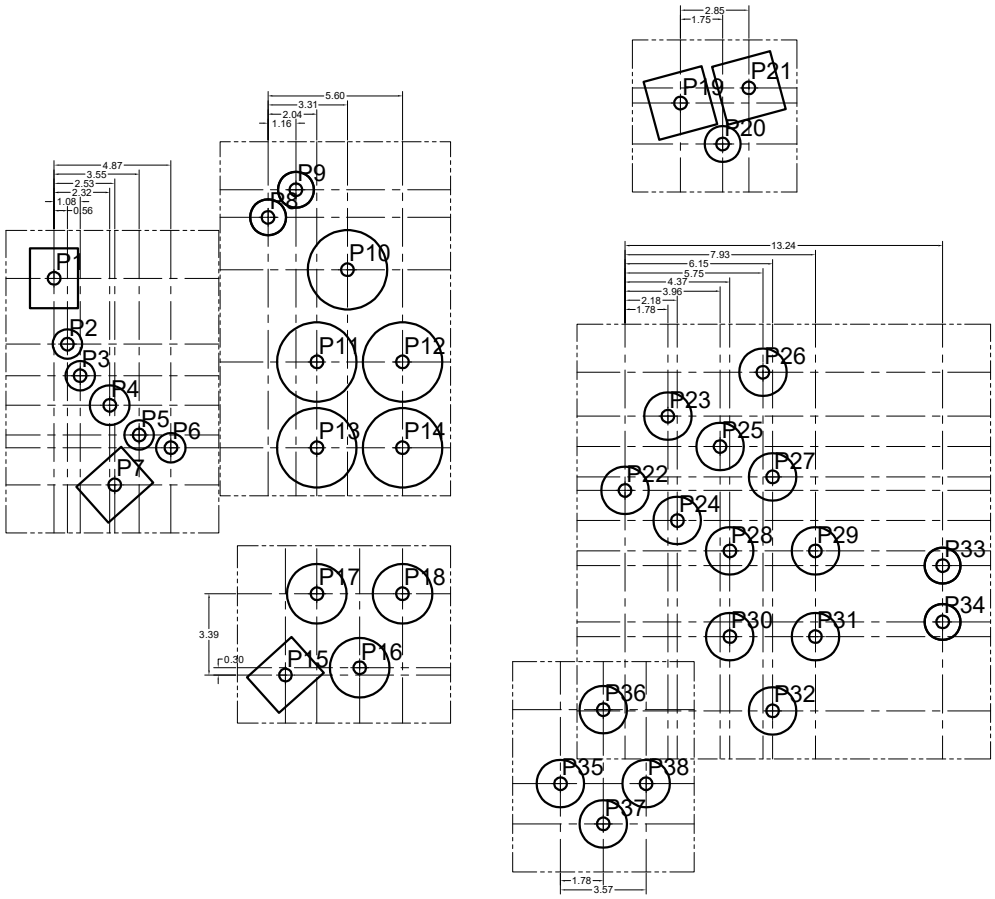

FOOTINGS LAYOUT

D. Tree Climber (NRO834-1001)

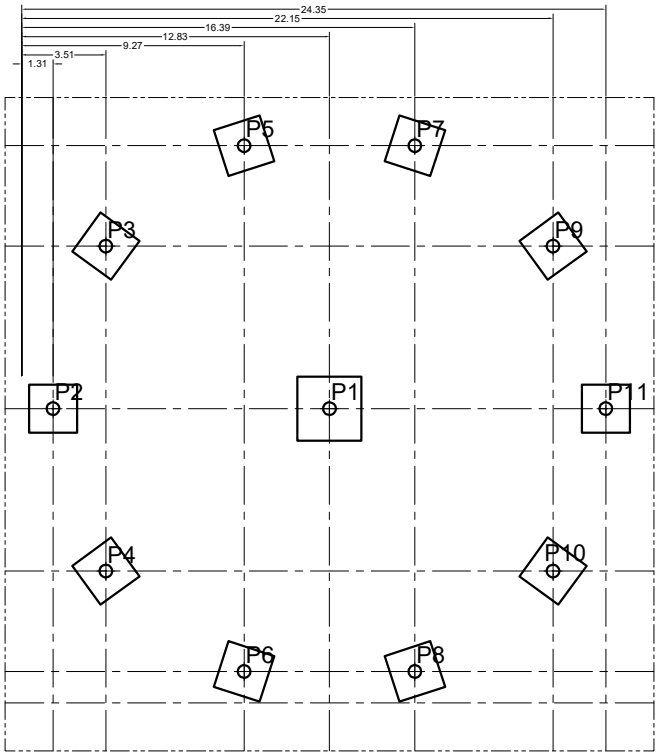

FOOTINGS LAYOUT

F. Parkour 5 (NRO857-1003)

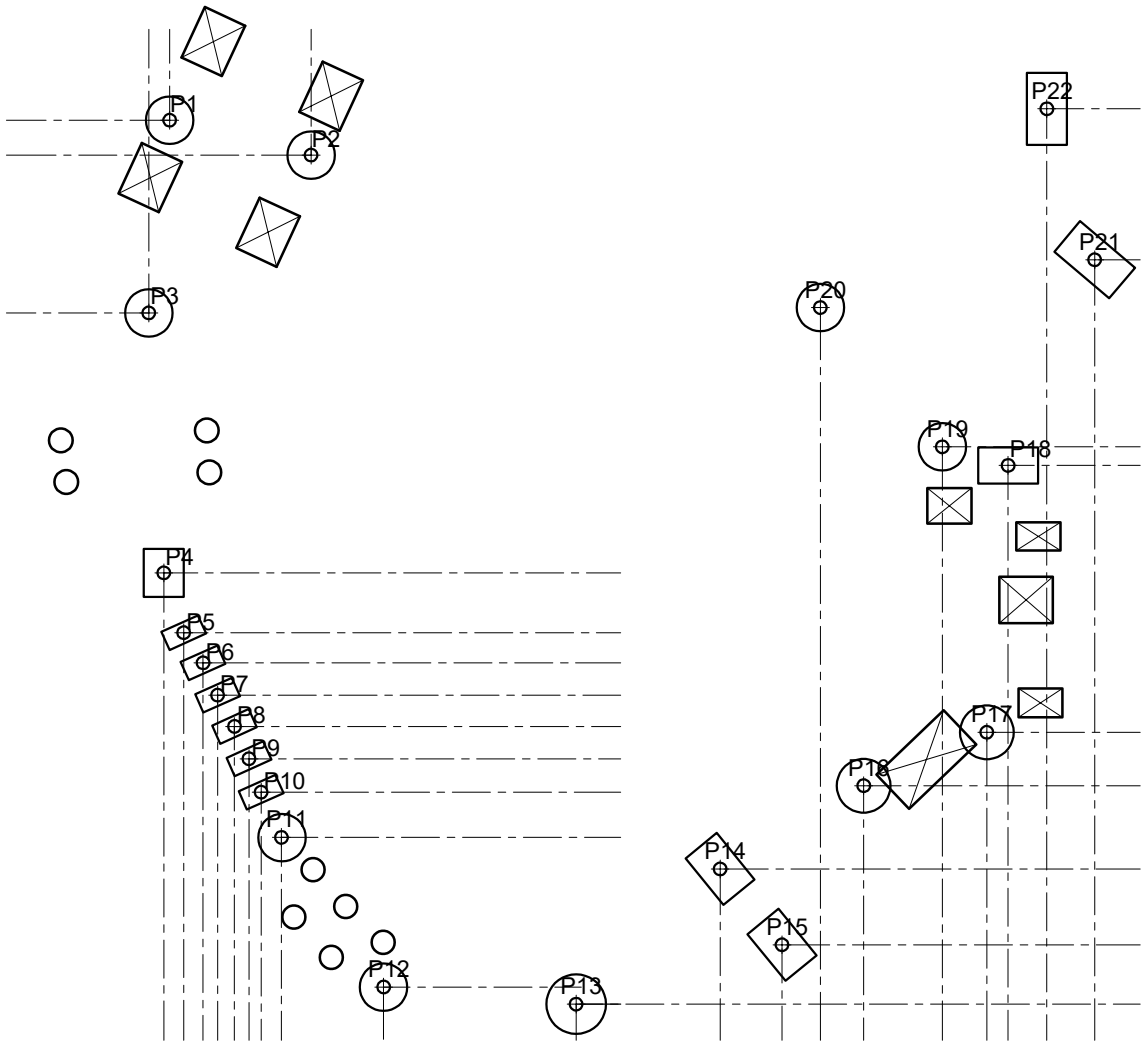

FOOTINGS LAYOUT

Foundation Calculations Summary

Equipment Data					Footers Data								Overall FOS
#	Equipment	L (ft)	W (ft)	H (ft)	Footer #	Configuration	Dia. / L (ft)	W (ft)	Conc. Depth (ft)	Excav. Depth (ft)	Conc. Vol. (ft^3)	Excav. Vol. (ft^3)	
A	Warlock's Escape NRC400101-1001	51.17	30.58	17.83	P1	Rect.	2.00	2.50	4.00	4.50	20.0	22.5	1.51
					P2	Circ.	1.25	-	4.50	5.00	5.5	6.1	
					P3	Circ.	1.25	-	4.50	5.00	5.5	6.1	
					P4	Circ.	1.67	-	4.50	5.00	9.8	10.9	
					P5	Circ.	1.25	-	4.50	5.00	5.5	6.1	
					P6	Circ.	1.25	-	4.50	5.00	5.5	6.1	
					P7	Rect.	2.00	2.50	4.00	4.50	20.0	22.5	
					P8	Circ.	1.50	-	3.00	3.50	5.3	6.2	
					P9	Circ.	1.50	-	3.00	3.50	5.3	6.2	
					P10	Circ.	3.25	-	4.50	5.00	37.3	41.5	
					P11	Circ.	3.25	-	4.50	5.00	37.3	41.5	
					P12	Circ.	3.25	-	4.50	5.00	37.3	41.5	
					P13	Circ.	3.25	-	4.50	5.00	37.3	41.5	
					P14	Circ.	3.25	-	4.50	5.00	37.3	41.5	
					P15	Rect.	2.00	2.50	3.00	3.50	15.0	17.5	
					P16	Circ.	2.50	-	3.00	3.50	14.7	17.2	
					P17	Circ.	2.50	-	3.00	3.50	14.7	17.2	
					P18	Circ.	2.50	-	3.00	3.50	14.7	17.2	
					P19	Rect.	2.50	2.50	4.00	4.50	25.0	28.1	
					P20	Circ.	2.00	-	4.00	4.50	12.6	14.1	
					P21	Rect.	2.50	2.50	4.00	4.50	25.0	28.1	
					P22	Circ.	2.00	-	3.50	4.00	11.0	12.6	
					P23	Circ.	2.00	-	3.50	4.00	11.0	12.6	
					P24	Circ.	2.00	-	3.50	4.00	11.0	12.6	
					P25	Circ.	2.00	-	3.50	4.00	11.0	12.6	
					P26	Circ.	2.00	-	3.50	4.00	11.0	12.6	
					P27	Circ.	2.00	-	3.50	4.00	11.0	12.6	
					P28	Circ.	2.00	-	3.50	4.00	11.0	12.6	
					P29	Circ.	2.00	-	3.50	4.00	11.0	12.6	
					P30	Circ.	2.00	-	3.50	4.00	11.0	12.6	
					P31	Circ.	2.00	-	3.50	4.00	11.0	12.6	
					P32	Circ.	2.00	-	3.50	4.00	11.0	12.6	
					P33	Circ.	1.50	-	3.00	3.50	5.3	6.2	
					P34	Circ.	1.50	-	3.00	3.50	5.3	6.2	
					P35	Circ.	2.00	-	3.50	4.00	11.0	12.6	
					P36	Circ.	2.00	-	3.50	4.00	11.0	12.6	
					P37	Circ.	2.00	-	3.50	4.00	11.0	12.6	
					P38	Circ.	2.00	-	3.50	4.00	11.0	12.6	
B	Spinner Bowl ELE400024-3717BL	1.67	1.83	2.00	P1	Circ.	1.50	-	2.50	3.00	4.4	5.3	4.53
C	Waterlilies Balance Posts NRO820-0601	7.08	3.50	1.08	P1	Circ.	1.00	-	2.00	2.00	1.6	1.6	3.43
					P1	Circ.	1.00	-	2.00	2.00	1.6	1.6	
					P1	Circ.	1.00	-	2.00	2.00	1.6	1.6	
					P1	Circ.	1.00	-	2.00	2.00	1.6	1.6	
					P1	Circ.	1.00	-	2.00	2.00	1.6	1.6	

Equipment Data					Footers Data								Overall FOS
#	Equipment	L (ft)	W (ft)	H (ft)	Footer #	Configuration	Dia. / L (ft)	W (ft)	Conc. Depth (ft)	Excav. Depth (ft)	Conc. Vol. (ft^3)	Excav. Vol. (ft^3)	
D	Tree Climber NRO834-1001	21.33	21.33	17.08	P1	Rect.	4.00	4.00	2.33	3.33	37.3	53.3	3.88
					P2	Rect.	2.67	2.67	2.33	3.33	16.6	23.7	
					P3	Rect.	2.67	2.67	2.33	3.33	16.6	23.7	
					P4	Rect.	2.67	2.67	2.33	3.33	16.6	23.7	
					P5	Rect.	2.67	2.67	2.33	3.33	16.6	23.7	
					P6	Rect.	2.67	2.67	2.33	3.33	16.6	23.7	
					P7	Rect.	2.67	2.67	2.33	3.33	16.6	23.7	
					P8	Rect.	2.67	2.67	2.33	3.33	16.6	23.7	
					P9	Rect.	2.67	2.67	2.33	3.33	16.6	23.7	
					P10	Rect.	2.67	2.67	2.33	3.33	16.6	23.7	
					P11	Rect.	2.67	2.67	2.33	3.33	16.6	23.7	
E	Stilts NRO806-0601	4.17	8.08	3.58	P1	Rect.	0.83	2.00	2.33	3.33	3.9	5.6	3.80
					P1	Rect.	0.83	2.00	2.33	3.33	3.9	5.6	
					P1	Rect.	0.83	2.00	2.33	3.33	3.9	5.6	
					P1	Rect.	0.83	2.00	2.33	3.33	3.9	5.6	
					P1	Rect.	0.83	2.00	2.33	3.33	3.9	5.6	
					P1	Rect.	0.83	2.00	2.33	3.33	3.9	5.6	
F	Parkour 5 NRO857-1003	43.25	40.42	8.92	P1	Circ.	2.00	-	3.33	3.33	10.5	10.5	3.07
					P2	Circ.	2.00	-	3.33	3.33	10.5	10.5	
					P3	Circ.	2.00	-	3.33	3.33	10.5	10.5	
					P4	Rect.	1.67	2.00	3.33	3.33	11.1	11.1	
					P5	Rect.	1.67	0.83	2.33	2.33	3.2	3.2	
					P6	Rect.	1.67	0.83	2.33	2.33	3.2	3.2	
					P7	Rect.	1.67	0.83	2.33	2.33	3.2	3.2	
					P8	Rect.	1.67	0.83	2.33	2.33	3.2	3.2	
					P9	Rect.	1.67	0.83	2.33	2.33	3.2	3.2	
					P10	Rect.	1.67	0.83	2.33	2.33	3.2	3.2	
					P11	Circ.	2.00	-	3.33	3.33	10.5	10.5	
					P12	Circ.	2.00	-	3.33	3.33	10.5	10.5	
					P13	Circ.	2.50	-	3.50	3.50	17.2	17.2	
					P14	Rect.	1.67	2.50	3.33	3.33	13.9	13.9	
					P15	Rect.	1.67	2.50	3.33	3.33	13.9	13.9	
					P16	Circ.	2.50	-	3.33	3.33	16.4	16.4	
					P17	Circ.	2.50	-	3.33	3.33	16.4	16.4	
					P18	Rect.	2.50	1.67	3.33	3.33	13.9	13.9	
					P19	Circ.	2.00	-	3.33	3.33	10.5	10.5	
					P20	Circ.	2.00	-	3.33	3.33	10.5	10.5	
					P21	Rect.	1.67	3.00	3.33	3.33	16.7	16.7	
					P22	Rect.	1.67	3.00	3.33	3.33	16.7	16.7	
G	Birds Nest Swing NRO911-1101	13.58	6.75	9.33	P1	Rect.	2.50	1.50	3.58	3.58	13.4	13.4	3.17
					P2	Rect.	2.50	1.50	3.58	3.58	13.4	13.4	
					P3	Rect.	2.50	1.50	3.58	3.58	13.4	13.4	
					P4	Rect.	2.50	1.50	3.58	3.58	13.4	13.4	

Foundation Detailed Calculations

Equipment Data					Footers Data								Exposed Areas		Forces							Lever Arms		Moments					Uplift Check			Sliding Check			Overturning Check			Overall FOS
#	Equipment	L (ft)	W (ft)	H (ft)	Footer #	Configuration	Dia. / L (ft)	W (ft)	Conc. Depth (ft)	Excav. Depth (ft)	Conc. Vol. (ft^3)	Excav. Vol. (ft^3)	Top Area (ft^2)	Elev. Area (ft^2)	F_{Weight} (Conc.) (lb)	F_{Fill} (Soil) (lb)	$F_{Friction}$ (Soil) (lb)	F_{Active} (Soil) (lb)	$F_{Passive}$ (Soil) (lb)	F_{Uplift} (Wind) (lb)	$F_{Lateral}$ (Wind) (lb)	HZ Lever Arm (ft)	VL Lever Arm (ft)	M_{Weight} (Soil) (lb.ft)	M_{Active} (Soil) (lb.ft)	$M_{Passive}$ (Soil) (lb.ft)	M_{Uplift} (Wind) (lb.ft)	$M_{Lateral}$ (Wind) (lb.ft)	F_{Acting} (lb.ft)	F_{Resist} (lb.ft)	FOS	F_{Acting} (lb.ft)	F_{Resist} (lb.ft)	FOS	M_{Acting} (lb.ft)	M_{Resist} (lb.ft)	FOS	
A	Warlock's Escape NRC400101-1001	51.17	30.58	17.83	P1	Rect.	2.00	2.50	4.00	4.50	20.0	22.5	8	62	2800	275	1143	587	5280	489	3793	1	5.3	3075	782	7040	1532	20102	489	7022	**14.35**	7441	36841	**4.95**	26911	78203	**2.91**	1.51
					P2	Circ.	1.25	-	4.50	5.00	5.5	6.1			773	67	561	464	4177			1.56		1311	696	6265												
					P3	Circ.	1.25	-	4.50	5.00	5.5	6.1			773	67	561	464	4177			2.08		1748	696	6265												
					P4	Circ.	1.67	-	4.50	5.00	9.8	10.9			1374	120	748	619	5569			3.32		4962	928	8353												
					P5	Circ.	1.25	-	4.50	5.00	5.5	6.1			773	67	561	464	4177			4.55		3825	696	6265												
					P6	Circ.	1.25	-	4.50	5.00	5.5	6.1			773	67	561	464	4177			5.87		4934	696	6265												
					P7	Rect.	2.00	2.50	4.00	4.50	20.0	22.5			2800	275	1143	587	5280			3.53		10855	782	7040												
					P8	Circ.	1.50	-	3.00	3.50	5.3	6.2	62	146	742	97	449	248	2228	3793	8932	0.75	9.0	630	248	2228	13546	80385	3793	38284	**10.09**	15459	69703	**4.51**	103475	215080	**2.08**	
					P9	Circ.	1.50	-	3.00	3.50	5.3	6.2			742	97	449	248	2228			1.91		1603	248	2228												
					P10	Circ.	3.25	-	4.50	5.00	37.3	41.5			5226	456	1459	1207	10859			4.06		23071	1810	16289												
					P11	Circ.	3.25	-	4.50	5.00	37.3	41.5			5226	456	1459	1207	10859			2.79		15854	1810	16289												
					P12	Circ.	3.25	-	4.50	5.00	37.3	41.5			5226	456	1459	1207	10859			6.35		36085	1810	16289												
					P13	Circ.	3.25	-	4.50	5.00	37.3	41.5			5226	456	1459	1207	10859			2.79		15854	1810	16289												
					P14	Circ.	3.25	-	4.50	5.00	37.3	41.5			5226	456	1459	1207	10859			6.35		36085	1810	16289												
					P15	Rect.	2.00	2.50	3.00	3.50	15.0	17.5	33	53	2100	275	857	330	2970	2019	3242	1	5.3	2375	330	2970	5592	17184	2019	12472	**6.18**	4810	17518	**3.64**	24344	39986	**1.64**	
					P16	Circ.	2.50	-	3.00	3.50	14.7	17.2			2062	270	748	413	3713			1.3		3031	413	3713												
					P17	Circ.	2.50	-	3.00	3.50	14.7	17.2			2062	270	748	413	3713			4.39		10236	413	3713												
					P18	Circ.	2.50	-	3.00	3.50	14.7	17.2			2062	270	748	413	3713			4.39		10236	413	3713												
					P19	Rect.	2.50	2.50	4.00	4.50	25.0	28.1	29	53	3500	344	1270	733	6600	1774	3242	1.25	5.3	4805	978	8800	4938	17184	1774	12958	**7.30**	5296	21981	**4.15**	24860	51000	**2.05**	
					P20	Circ.	2.00	-	4.00	4.50	12.6	14.1			1759	173	798	587	5280			3		5796	782	7040												
					P21	Rect.	2.50	2.50	4.00	4.50	25.0	28.1			3500	344	1270	733	6600			4.1		15759	978	8800												
					P22	Circ.	2.00	-	3.50	4.00	11.0	12.6	90	169	1539	173	698	449	4043	5506	10339	1	7.6	1712	524	4716	38138	78936	5506	29092	**5.28**	15774	56388	**3.57**	123333	185658	**1.51**	
					P23	Circ.	2.00	-	3.50	4.00	11.0	12.6			1539	173	698	449	4043			2.78		4760	524	4716												
					P24	Circ.	2.00	-	3.50	4.00	11.0	12.6			1539	173	698	449	4043			3.18		5445	524	4716												
					P25	Circ.	2.00	-	3.50	4.00	11.0	12.6			1539	173	698	449	4043			4.96		8492	524	4716												
					P26	Circ.	2.00	-	3.50	4.00	11.0	12.6			1539	173	698	449	4043			5.37		9194	524	4716												
					P27	Circ.	2.00	-	3.50	4.00	11.0	12.6			1539	173	698	449	4043			5.37		9194	524	4716												
					P28	Circ.	2.00	-	3.50	4.00	11.0	12.6			1539	173	698	449	4043			6.75		11557	524	4716												
					P29	Circ.	2.00	-	3.50	4.00	11.0	12.6			1539	173	698	449	4043			7.15		12242	524	4716												
					P30	Circ.	2.00	-	3.50	4.00	11.0	12.6			1539	173	698	449	4043			7.15		12242	524	4716												
					P31	Circ.	2.00	-	3.50	4.00	11.0	12.6			1539	173	698	449	4043			8.93		15290	524	4716												
					P32	Circ.	2.00	-	3.50	4.00	11.0	12.6			1539	173	698	449	4043			8.93		15290	524	4716												
					P33	Circ.	1.50	-	3.00	3.50	5.3	6.2			742	97	449	248	2228			14.24		11953	248	2228												
					P34	Circ.	1.50	-	3.00	3.50	5.3	6.2			742	97	449	248	2228			14.24		11953	248	2228												
					P35	Circ.	2.00	-	3.50	4.00	11.0	12.6	9	37	1539	173	698	449	4043	551	2263	1	5.3	1712	524	4716	1532	11997	551	9642	**17.51**	4060	18663	**4.60**	15625	37921	**2.43**	
					P36	Circ.	2.00	-	3.50	4.00	11.0	12.6			1539	173	698	449	4043			2.78		4760	524	4716												
					P37	Circ.	2.00	-	3.50	4.00	11.0	12.6			1539	173	698	449	4043			2.78		4760	524	4716												
					P38	Circ.	2.00	-	3.50	4.00	11.0	12.6			1539	173	698	449	4043			4.57		7825	524	4716												
B	Spinner Bowl ELE400024-3717BL	1.67	1.83	2.00	P1	Circ.	1.50	-	2.50	3.00	4.4	5.3	3	2.0	619	97	374	172	1547	184	122	0.75	1	537	143	1289	138	122	184	1090	**5.94**	294	1807	**6.14**	403	1826	**4.53**	4.53
C	Waterlilies Balance Posts NRO820-0601	7.08	3.50	1.08	P1	Circ.	1.00	-	2.00	2.00	1.6	1.6	2.0	1.00	220	0	200	73	660	122	61	0.5	0.54	110	49	440	61	33	122	419	**3.43**	135	740	**5.50**	143	550	**3.84**	3.43
					P1	Circ.	1.00	-	2.00	2.00	1.6	1.6	2.0	1.00	220	0	200	73	660	122	61	0.5	0.54	110	49	440	61	33	122	419	**3.43**	135	740	**5.50**	143	550	**3.84**	
					P1	Circ.	1.00	-	2.00	2.00	1.6	1.6	2.0	1.00	220	0	200	73	660	122	61	0.5	0.54	110	49	440	61	33	122	419	**3.43**	135	740	**5.50**	143	550	**3.84**	
					P1	Circ.	1.00	-	2.00	2.00	1.6	1.6	2.0	1.00	220	0	200	73	660	122	61	0.5	0.54	110	49	440	61	33	122	419	**3.43**	135	740	**5.50**	143	550	**3.84**	
					P1	Circ.	1.00	-	2.00	2.00	1.6	1.6	2.0	1.00	220	0	200	73	660	122	61	0.5	0.54	110	49	440	61	33	122	419	**3.43**	135	740	**5.50**	143	550	**3.84**	

Equipment Data					Footers Data								Exposed Areas		Forces							Lever Arms		Moments					Uplift Check			Sliding Check			Overturning Check			Overall FOS
#	Equipment	L (ft)	W (ft)	H (ft)	Footer #	Configuration	Dia. / L (ft)	W (ft)	Conc. Depth (ft)	Excav. Depth (ft)	Conc. Vol. (ft^3)	Excav. Vol. (ft^3)	Top Area (ft^2)	Elev. Area (ft^2)	F_{Weight} (Conc.) (lb)	F_{Fill} (Soil) (lb)	$F_{Friction}$ (Soil) (lb)	F_{Active} (Soil) (lb)	$F_{Passive}$ (Soil) (lb)	F_{Uplift} (Wind) (lb)	$F_{Lateral}$ (Wind) (lb)	HZ Lever Arm (ft)	VL Lever Arm (ft)	M_{Weight} (Soil) (lb.ft)	M_{Active} (Soil) (lb.ft)	$M_{Passive}$ (Soil) (lb.ft)	M_{Uplift} (Wind) (lb.ft)	$M_{Lateral}$ (Wind) (lb.ft)	F_{Acting} (lb.ft)	F_{Resist} (lb.ft)	FOS	F_{Acting} (lb.ft)	F_{Resist} (lb.ft)	FOS	M_{Acting} (lb.ft)	M_{Resist} (lb.ft)	FOS	
D	Tree Climber NRO834-1001	21.33	21.33	17.08	P1	Rect.	4.00	4.00	2.33	3.33	37.3	53.3	117	74	5227	1760	1185	399	3593	7158	4527	14.16	8.6	98954	311	2795	92699	38796	7158	47127	**6.58**	7588	41394	**5.46**	133876	518777	**3.88**	3.88
					P2	Rect.	2.67	2.67	2.33	3.33	16.6	23.7			2323	782	790	266	2396			1.31		4068	207	1863												
					P3	Rect.	2.67	2.67	2.33	3.33	16.6	23.7			2323	782	790	266	2396			3.51		10899	207	1863												
					P4	Rect.	2.67	2.67	2.33	3.33	16.6	23.7			2323	782	790	266	2396			3.51		10899	207	1863												
					P5	Rect.	2.67	2.67	2.33	3.33	16.6	23.7			2323	782	790	266	2396			9.27		28785	207	1863												
					P6	Rect.	2.67	2.67	2.33	3.33	16.6	23.7			2323	782	790	266	2396			9.27		28785	207	1863												
					P7	Rect.	2.67	2.67	2.33	3.33	16.6	23.7			2323	782	790	266	2396			16.39		50894	207	1863												
					P8	Rect.	2.67	2.67	2.33	3.33	16.6	23.7			2323	782	790	266	2396			16.39		50894	207	1863												
					P9	Rect.	2.67	2.67	2.33	3.33	16.6	23.7			2323	782	790	266	2396			22.15		68780	207	1863												
					P10	Rect.	2.67	2.67	2.33	3.33	16.6	23.7			2323	782	790	266	2396			22.15		68780	207	1863												
					P11	Rect.	2.67	2.67	2.33	3.33	16.6	23.7			2323	782	790	266	2396			24.35		75611	207	1863												
E	Stilts NRO806-0601	4.17	8.08	3.58	P1	Rect.	0.83	2.00	2.33	3.33	3.9	5.6	1	2.00	544	183	420	83	749	61	122	1	1.79	728	65	582	61	219	61	1148	**18.76**	206	1014	**4.93**	345	1310	**3.80**	3.80
					P1	Rect.	0.83	2.00	2.33	3.33	3.9	5.6	1	2.00	544	183	420	83	749	61	122	1	1.79	728	65	582	61	219	61	1148	**18.76**	206	1014	**4.93**	345	1310	**3.80**	
					P1	Rect.	0.83	2.00	2.33	3.33	3.9	5.6	1	2.00	544	183	420	83	749	61	122	1	1.79	728	65	582	61	219	61	1148	**18.76**	206	1014	**4.93**	345	1310	**3.80**	
					P1	Rect.	0.83	2.00	2.33	3.33	3.9	5.6	1	2.00	544	183	420	83	749	61	122	1	1.79	728	65	582	61	219	61	1148	**18.76**	206	1014	**4.93**	345	1310	**3.80**	
					P1	Rect.	0.83	2.00	2.33	3.33	3.9	5.6	1	2.00	544	183	420	83	749	61	122	1	1.79	728	65	582	61	219	61	1148	**18.76**	206	1014	**4.93**	345	1310	**3.80**	
F	Parkour 5 NRO857-1003	43.25	40.42	8.92	P1	Circ.	2.00	-	3.33	3.33	10.5	10.5	2	4.05	1466	0	665	407	3667	122	248	1	2.50	1466	453	4074	122	619	122	2131	**17.42**	655	4200	**6.41**	1194	5540	**4.64**	3.07
					P2	Circ.	2.00	-	3.33	3.33	10.5	10.5	2	3.55	1466	0	665	407	3667	122	217	1	2.00	1466	453	4074	122	434	122	2131	**17.42**	625	4200	**6.72**	1009	5540	**5.49**	
					P3	Circ.	2.00	-	3.33	3.33	10.5	10.5	1	4.00	1466	0	665	407	3667	61	245	1	2.00	1466	453	4074	61	489	61	2131	**34.84**	652	4200	**6.44**	1003	5540	**5.52**	
					P4	Rect.	1.67	2.00	3.33	3.33	11.1	11.1	1.5	3.50	1556	0	776	340	3056	92	214	0.833	3.50	1296	377	3395	76	749	92	2332	**25.41**	554	3622	**6.54**	1203	4691	**3.90**	
					P5	Rect.	1.67	0.83	2.33	2.33	3.2	3.2	1	2.00	454	0	370	166	1497	61	122	0.833	2.00	378	129	1165	51	245	61	824	**13.47**	289	1662	**5.76**	425	1543	**3.63**	
					P6	Rect.	1.67	0.83	2.33	2.33	3.2	3.2	1	2.00	454	0	370	166	1497	61	122	0.833	2.00	378	129	1165	51	245	61	824	**13.47**	289	1662	**5.76**	425	1543	**3.63**	
					P7	Rect.	1.67	0.83	2.33	2.33	3.2	3.2	1	2.00	454	0	370	166	1497	61	122	0.833	2.00	378	129	1165	51	245	61	824	**13.47**	289	1662	**5.76**	425	1543	**3.63**	
					P8	Rect.	1.67	0.83	2.33	2.33	3.2	3.2	1	2.00	454	0	370	166	1497	61	122	0.833	2.00	378	129	1165	51	245	61	824	**13.47**	289	1662	**5.76**	425	1543	**3.63**	
					P9	Rect.	1.67	0.83	2.33	2.33	3.2	3.2	1	2.00	454	0	370	166	1497	61	122	0.833	2.00	378	129	1165	51	245	61	824	**13.47**	289	1662	**5.76**	425	1543	**3.63**	
					P10	Rect.	1.67	0.83	2.33	2.33	3.2	3.2	1	2.00	454	0	370	166	1497	61	122	0.833	2.00	378	129	1165	51	245	61	824	**13.47**	289	1662	**5.76**	425	1543	**3.63**	
					P11	Circ.	2.00	-	3.33	3.33	10.5	10.5	1	3.75	1466	0	665	407	3667	61	229	1	3.75	1466	453	4074	61	860	61	2131	**34.84**	637	4200	**6.60**	1374	5540	**4.03**	
					P12	Circ.	2.00	-	3.33	3.33	10.5	10.5	1	3.75	1466	0	665	407	3667	61	229	1	3.75	1466	453	4074	61	860	61	2131	**34.84**	637	4200	**6.60**	1374	5540	**4.03**	
					P13	Circ.	2.50	-	3.50	3.50	17.2	17.2	1	9.00	2405	0	873	561	5053	61	551	1.25	3.50	3007	655	5895	76	1927	61	3278	**53.59**	1112	5929	**5.33**	2659	8902	**3.35**	
					P14	Rect.	1.67	2.50	3.33	3.33	13.9	13.9	1.5	4.81	1944	0	882	340	3056	92	294	0.833	3.50	1620	377	3395	76	1030	92	2827	**30.80**	634	3763	**5.94**	1484	5015	**3.38**	
					P15	Rect.	1.67	2.50	3.33	3.33	13.9	13.9	1	4.81	1944	0	882	340	3056	61	294	0.833	3.50	1620	377	3395	51	1030	61	2827	**46.20**	634	3763	**5.94**	1459	5015	**3.44**	
					P16	Circ.	2.50	-	3.33	3.33	16.4	16.4	1.5	6.38	2291	0	831	509	4583	92	390	1.25	4.50	2863	566	5093	115	1755	92	3122	**34.02**	899	5417	**6.02**	2436	7956	**3.27**	
					P17	Circ.	2.50	-	3.33	3.33	16.4	16.4	1.5	6.38	2291	0	831	509	4583	92	390	1.25	4.50	2863	566	5093	115	1755	92	3122	**34.02**	899	5417	**6.02**	2436	7956	**3.27**	
					P18	Rect.	2.50	1.67	3.33	3.33	13.9	13.9	1.5	6.50	1944	0	882	509	4583	92	398	1.25	3.75	2431	566	5093	115	1491	92	2827	**30.80**	907	5291	**5.83**	2172	7523	**3.46**	
					P19	Circ.	2.00	-	3.33	3.33	10.5	10.5	2	3.50	1466	0	665	407	3667	122	214	1	3.75	1466	453	4074	122	803	122	2131	**17.42**	622	4200	**6.76**	1378	5540	**4.02**	
					P20	Circ.	2.00	-	3.33	3.33	10.5	10.5	5.5	3.50	1466	0	665	407	3667	336	214	1	3.50	1466	453	4074	336	749	336	2131	**6.33**	622	4200	**6.76**	1539	5540	**3.60**	
					P21	Rect.	1.67	3.00	3.33	3.33	16.7	16.7	5	4.25	2333	0	988	340	3056	306	260	0.833	4.25	1944	377	3395	255	1105	306	3321	**10.86**	600	3905	**6.51**	1737	5340	**3.07**	
					P22	Rect.	1.67	3.00	3.33	3.33	16.7	16.7	5	4.25	2333	0	988	340	3056	306	260	0.833	4.25	1944	377	3395	255	1105	306	3321	**10.86**	600	3905	**6.51**	1737	5340	**3.07**	
G	Birds Nest Swing NRO911-1101	13.58	6.75	9.33	P1	Rect.	2.50	1.50	3.58	3.58	13.4	13.4	31	26	1881	0	910	589	5297	1896	1591	1.25	4.75	2352	703	6327	9506	7555	1896	11166	**5.89**	3945	23925	**6.07**	19873	63025	**3.17**	3.17
					P2	Rect.	2.50	1.50	3.58	3.58	13.4	13.4			1881	0	910	589	5297			1.25		2352	703	6327												
					P3	Rect.	2.50	1.50	3.58	3.58	13.4	13.4			1881	0	910	589	5297			8.775		16508	703	6327												
					P4	Rect.	2.50	1.50	3.58	3.58	13.4	13.4			1881	0	910	589	5297			8.775		16508	703	6327												

Appendices

Appendix (I)

Typical Footer Details

TYPICAL FOOTER DETAIL

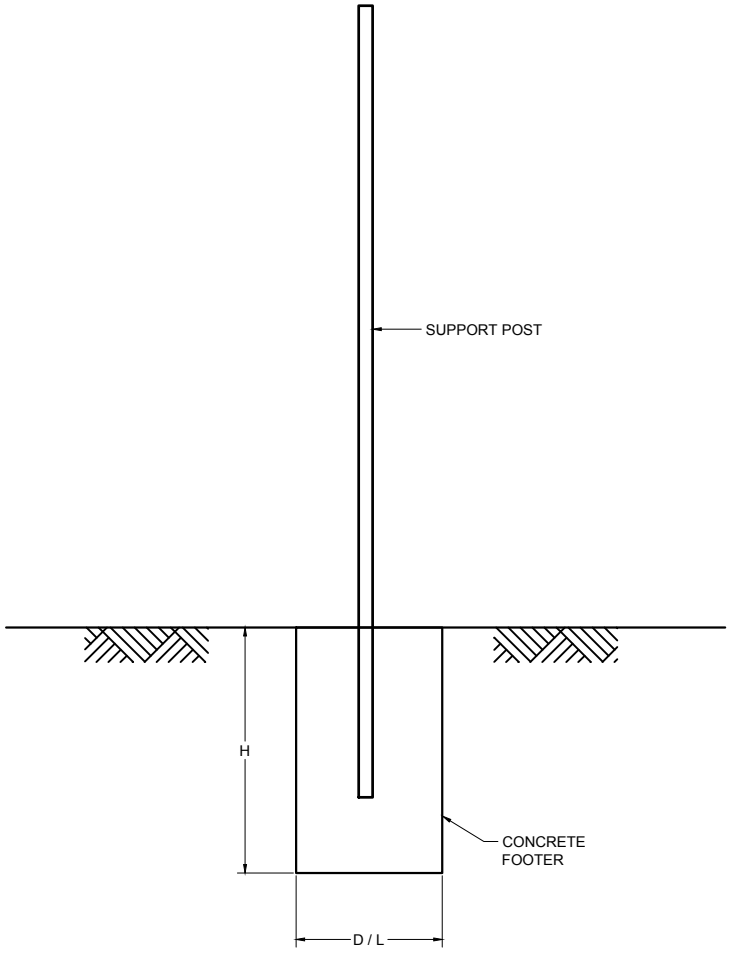

SECTION

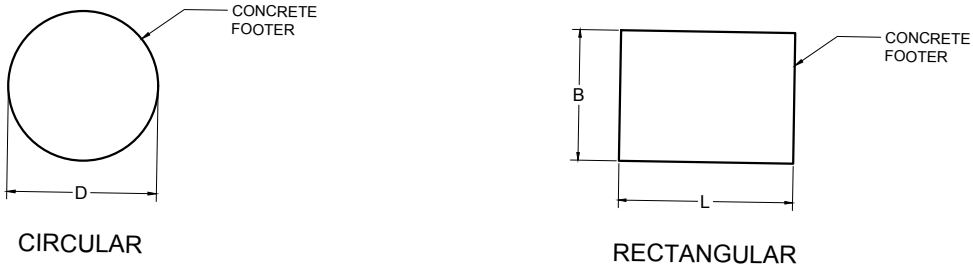

CIRCULAR

RECTANGULAR

PLAN

TYPICAL FOOTER LOADS

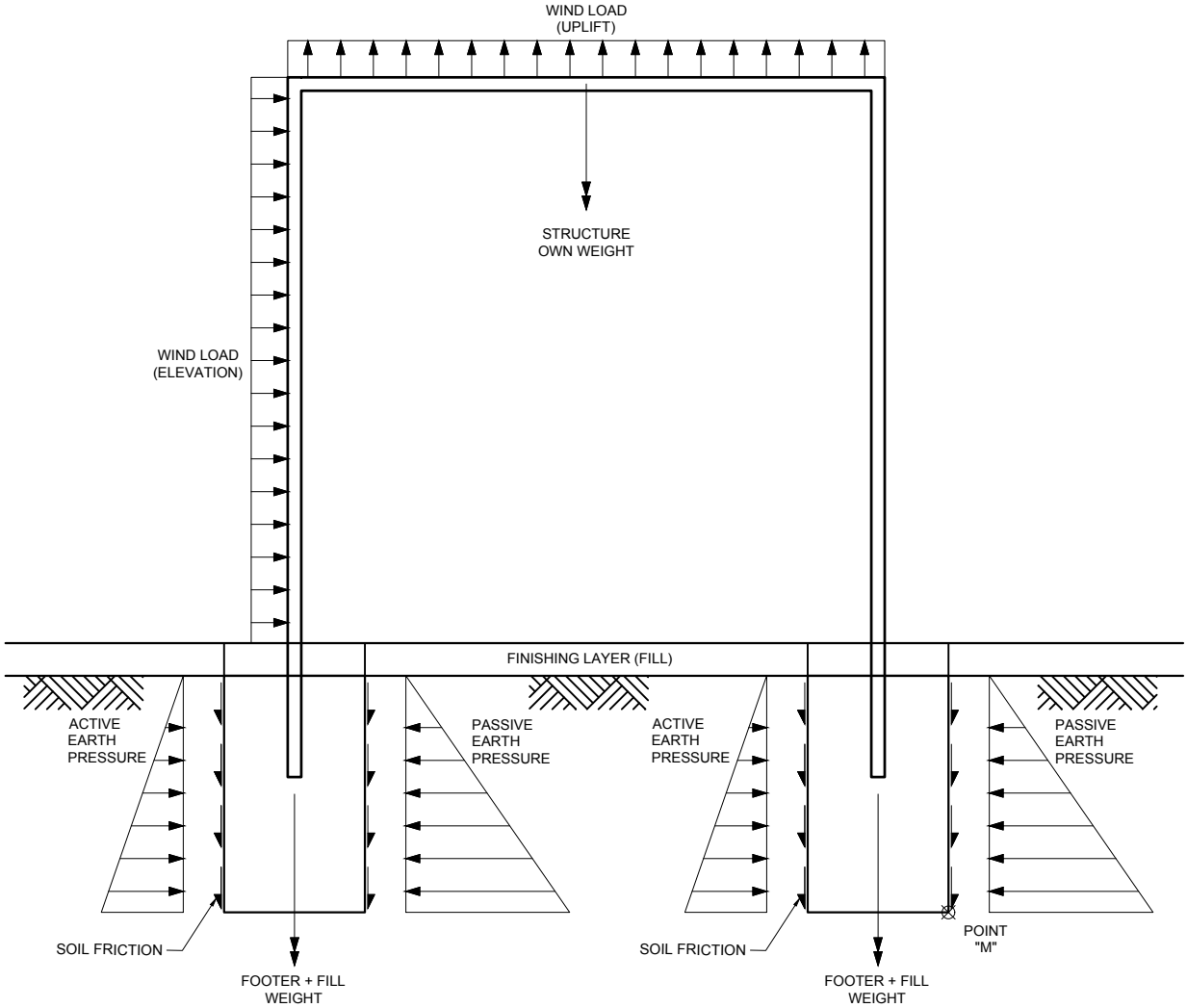

Appendix (II)

Equipment datasheets

Warlock's Escape

NRC400101-1001

Item no. NRC400101-1001	
General Product Information	
Dimensions LxWxH	51'2"x30'7"x17'10"
Age group	5 - 12
Play capacity (users)	34
Item color	

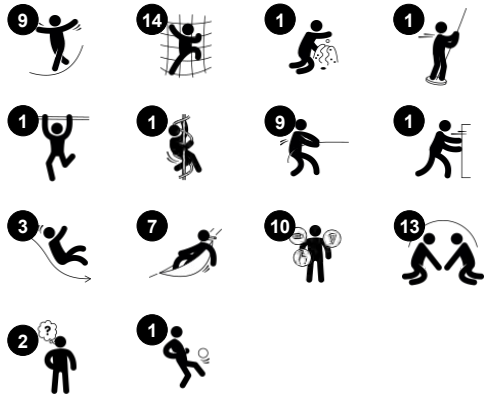

Children love to climb, crawl, run, and slide, and Warlock's Escape offers exactly that. With its organic shapes and various play opportunities, children will repeatedly return here to play. Looping the structure is not only great fun. Climbing, crawling, and balancing also support the children's motor skills ABC: agility, balance, and coordination. These are fundamental for children to feel movement security. The stomach-tickling slide also trains balance, and a well-trained sense of balance is fundamental for being able to sit still and concentrate.

The curly climber trains coordination and proprioception, as well as logical thinking when placing arms and legs right for rotating downwards. When passing each other on the Inclined Net Bridge or waiting their turn on the swaying Climb Trail, children develop empathy and turn-taking skills.

Data is subject to change without prior notice.

Warlock's Escape

NRC400101-1001

Climb trail
Physical: the rubbery, swaying discs train children's cross-coordination, sense of balance and arm and leg muscles . This builds movement confidence. **Social-Emotional:** the discs make great destinations and meeting point, and take cooperation when crossing others on the way.

Hammock bed
Physical: swaying back and forth develops the sense of balance and spatial awareness, both important for judging distances and navigating space confidently. **Social-Emotional:** swaying, sharing and meeting with groups of friends. Turn-taking skills, when deciding who is pushing and who is swaying.

Net bridge, inclined
Physical: walking the open net up or downwards develops balance and spatial awareness. **Social-Emotional:** interaction with children outside, socializing. Cooperation and consideration, e.g. when passing others.

Wackle bridge
Physical: the sense of balance and space, and training of posture. Important for motor control and confidence in moving. **Social-Emotional:** cooperation, turn-taking and thrill when jumping the steps.

Curly climber
Physical: coordination and proprioception are supported when placing arms and legs correctly for going down. Sense of balance when rotating. Arm muscles for holding tight. **Social-Emotional:** empathy stimulated by turn-taking. **Cognitive:** logical thinking when placing arms and legs right for rotating downward.

Double slide
Physical: sliding develops spatial awareness and a sense of balance. Furthermore, the core muscles are trained when sitting upright going down. **Social-Emotional:** invites socializing, supports parent-child and peer-to-peer play.

Sewing Panel
Physical: Hand-eye coordination is trained in fitting the string through the holes. This benefits children's motor skills e.g. when writing. **Social-Emotional:** Cooperating on fitting the string through the openings trains turn-taking, empathy and negotiation. **Cognitive:** Fitting the string through the holes supports logical thinking and rules understanding. **Creative:** the string length and various holes allow the children to make different patterns.

Data is subject to change without prior notice.

Warlock's Escape

NRC400101-1001

All Organic Robinia products by KOMPAN are made of Robinia wood from sustainable European sources. On request it can be supplied as FSC® Certified (FSC® C004450).

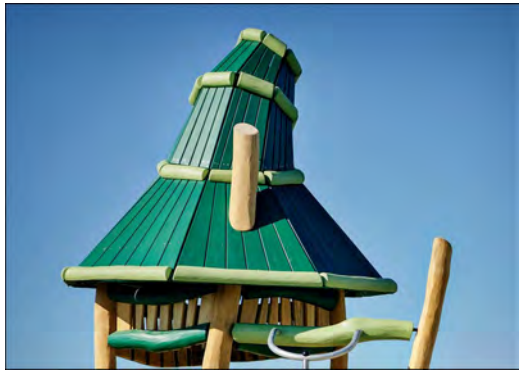

Robinia products are available in three different wood treatment options: untreated Robinia wood or brown painted with a pigment that maintains the wood color and colored version with paint of selected components.

The products are preassembled from the factory to ensure all safety requirements are considered. Please note that each Robinia fantasy structure will have its unique appearance because of the natural shape of the individual wood posts.

Item no. NRC400101-1001

Installation Information	
Max. fall height	9'8"
Safety surfacing area	1500ft²
Total installation time	88.7 hours
Excavation volume	10.88yd³
Concrete volume	6.83yd³
Footing depth (standard)	3'3"
Shipment weight	10326lbs
Anchoring options	In-ground ✔

Warranty Information	
Corocord Rope	10 Years
Hollow PE Parts	10 Years
Robinia Wood	10 Years
Spare Parts Availability	10 Years
Stainless steel components	Lifetime

There are Multiple footing options for all products: Surface anchoring with steel footings and expansion bolts. Wood in-ground or steel in-ground footings.

The stainless-steel activities are made of high-quality stainless steel. The steel is cleaned by a total pickling process after manufacturing to ensure a smooth and clean gliding surfaces.

The slides can be chosen in six different colors and three materials: Straight or curved one-piece molded PE slides. Combined EcoCore™ sides and stainless steel. Full stainless steel in a one-piece design for more vandalism-proof solutions.

Elevated activities **9**	Accessible elevated activities	Accessible ground level activities	Accessible ground level play types
Present	**9**	**3**	**3**
Required	**5**	**3**	**3**

ASTM F1487 compliant

Data is subject to change without prior notice.

Sustainability Data

NRC400101-1001

Cradle to Gate A1-A3	Total CO_2 emission	CO_2e/kg	Recycled materials
	kg CO_2e	kg CO_2e/kg	%
NRC400101-1001	3,123.22	0.74	3.16

The overall framework applied for these factors is the Environmental Product Declaration (EPD), which quantifies "environmental information on the life cycle of a product and enable comparisons between products fulfilling the same function" (ISO, 2006). This follows the structure and applies a Life-Cycle Assessment approach to the entire Product stage from raw material through manufacturing (A1-A3))

Kompan A/S
C.F. Tietgens Boulevard 32C
DK-5220 Odense SØ
Denmark

Validation of CO_2 calculation method
BUREAU VERITAS
HSE Denmark A/S

Verification of CO_2 calculation of: Nature play

Data version no. 2023-10-05

The CO_2 calculation and data are in compliance with the principles of a carbon footprint impact according to the GHG protocol (Greenhouse Gas Protocol), Scope 3, cradle to gate related to all individual components in the product category: "Nature play" represented by item no.: NRO409-0621.

(Scope 3 emissions include emission sources in the upstream and downstream value chain).

Date: 30. October 2023 | Valid until: 30. October 2025
Verified by:

Julie Marie Vejsgaard Larsen, LCA & EPD Consultant

Verification based on report: Validation of CO_2 calculation of 9 categories of Kompan product line, version 1.0, prepared by: Bureau Veritas HSE, Denmark: Julie M. V. Larsen.

Publication date: 30. October 2023

By Bureau Veritas HSE
www.bureauveritas.dk
+45 7731 1000

Data is subject to change without prior notice.

Warlock's Escape

NRC400101-1001

* Max fall height | ** Total height | *** Safety surfacing area

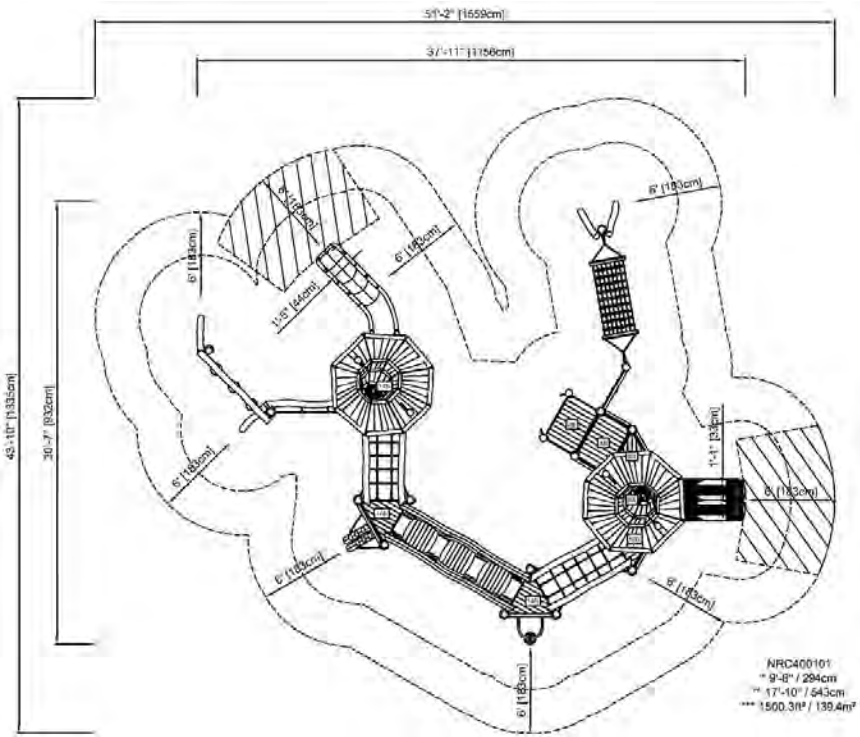

* Max fall height | ** Total height

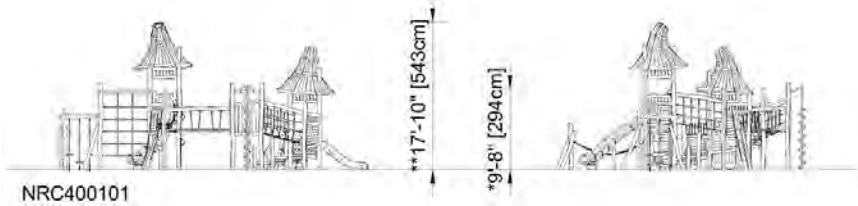

Click to see TOP VIEW

Click to see SIDE VIEW

Data is subject to change without prior notice.

Overview

NRC400101-1001

ID ----

MarPri

2024-07-22

Colorline:	Untreated
Foundation:	100 cm wood
Norm:	---
Units:	inch
Post material:	Robinia
Post colors:	Untreated

KOMPAN

NRC400101-1001

ID ----

MarPri

2024-07-22

KOMPAN

NRC400101-1001

ID ----

MarPri

2024-07-22

Overview

KOMPAN

NRC400101-1001

ID ----

MarPri

2024-07-22

Tower & Side Overview

KOMPAN

NRC400101-1001

ID ----

MarPri

2024-07-22

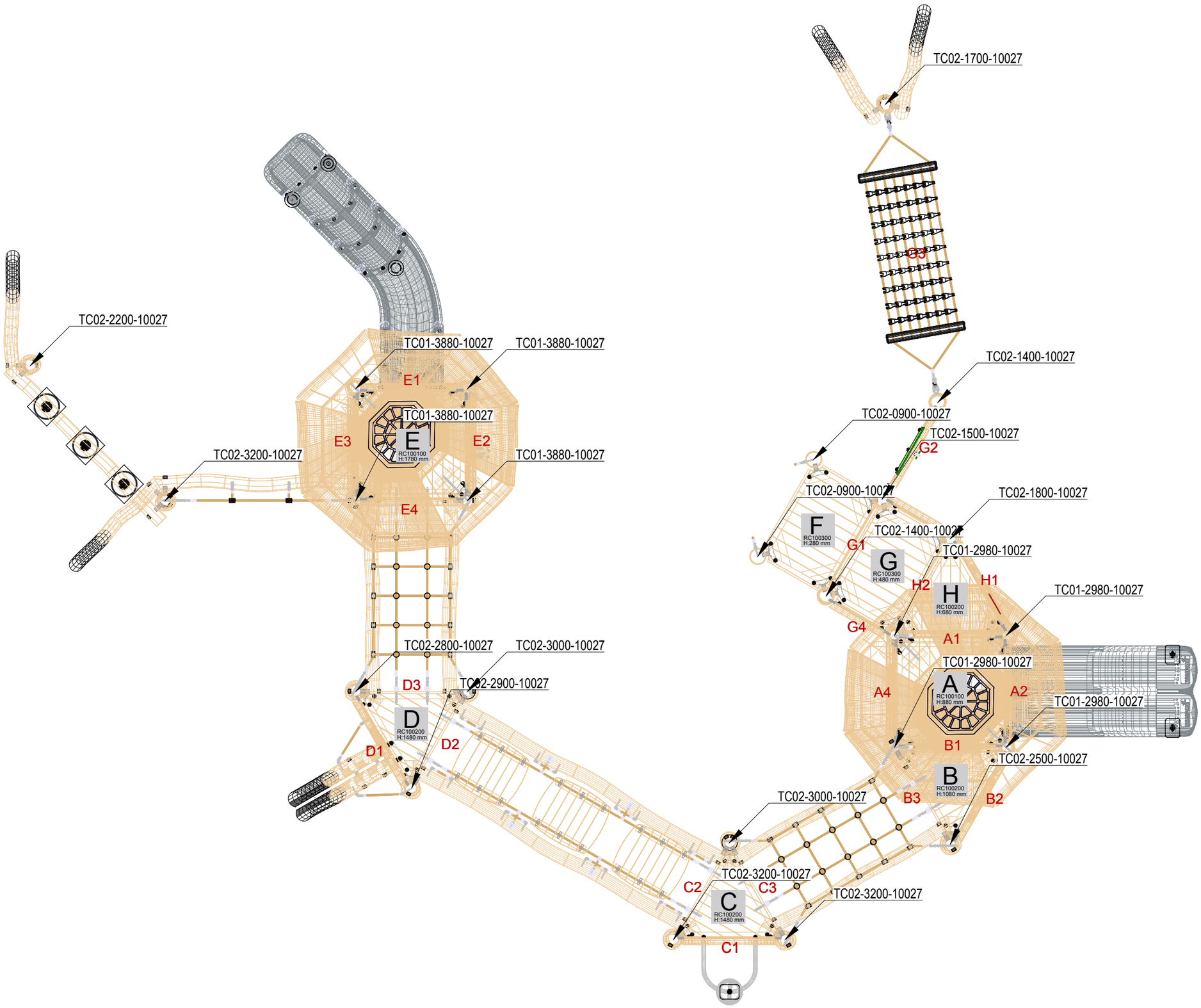

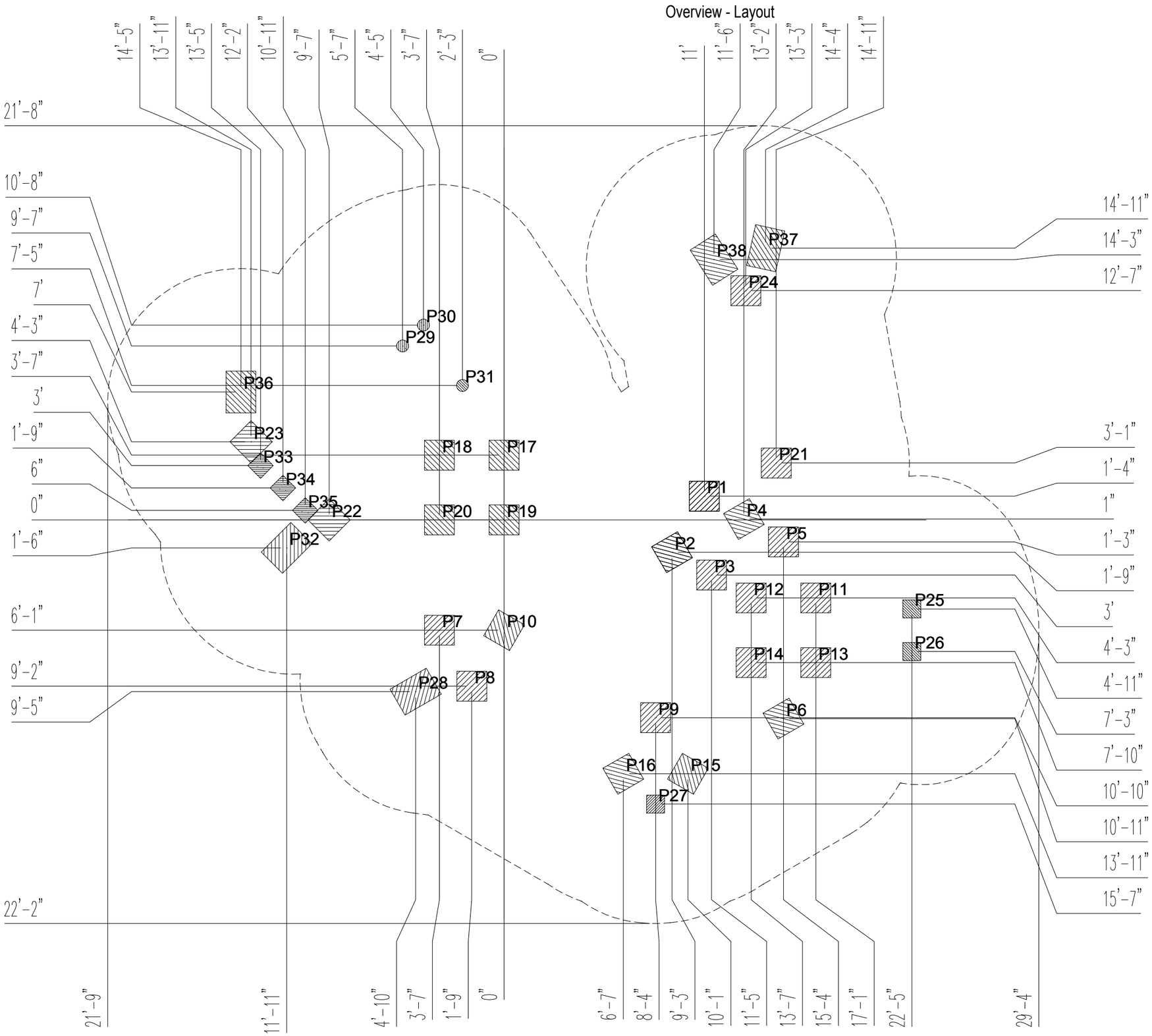

KOMPAN

NRC400101-1001

ID ----

MarPri

2024-07-22

Scale: MAX
Units: inch

Safety zone
- Norm: ASTM F1487
- Perimeter: 173 ft
- Area: 1500.3 ft²

Concrete
- Volume: 184.35 CU.FT.

C25/30 (B25)

$f_{ck,cube}$ = 30 N/mm²

Use the specified quality of concrete in accordance with all specifications from the concrete supplier taking the nature of the product to be installed into account.

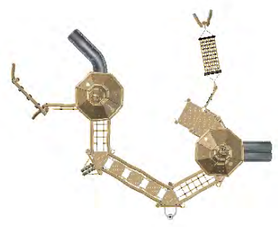

Overview - Layout

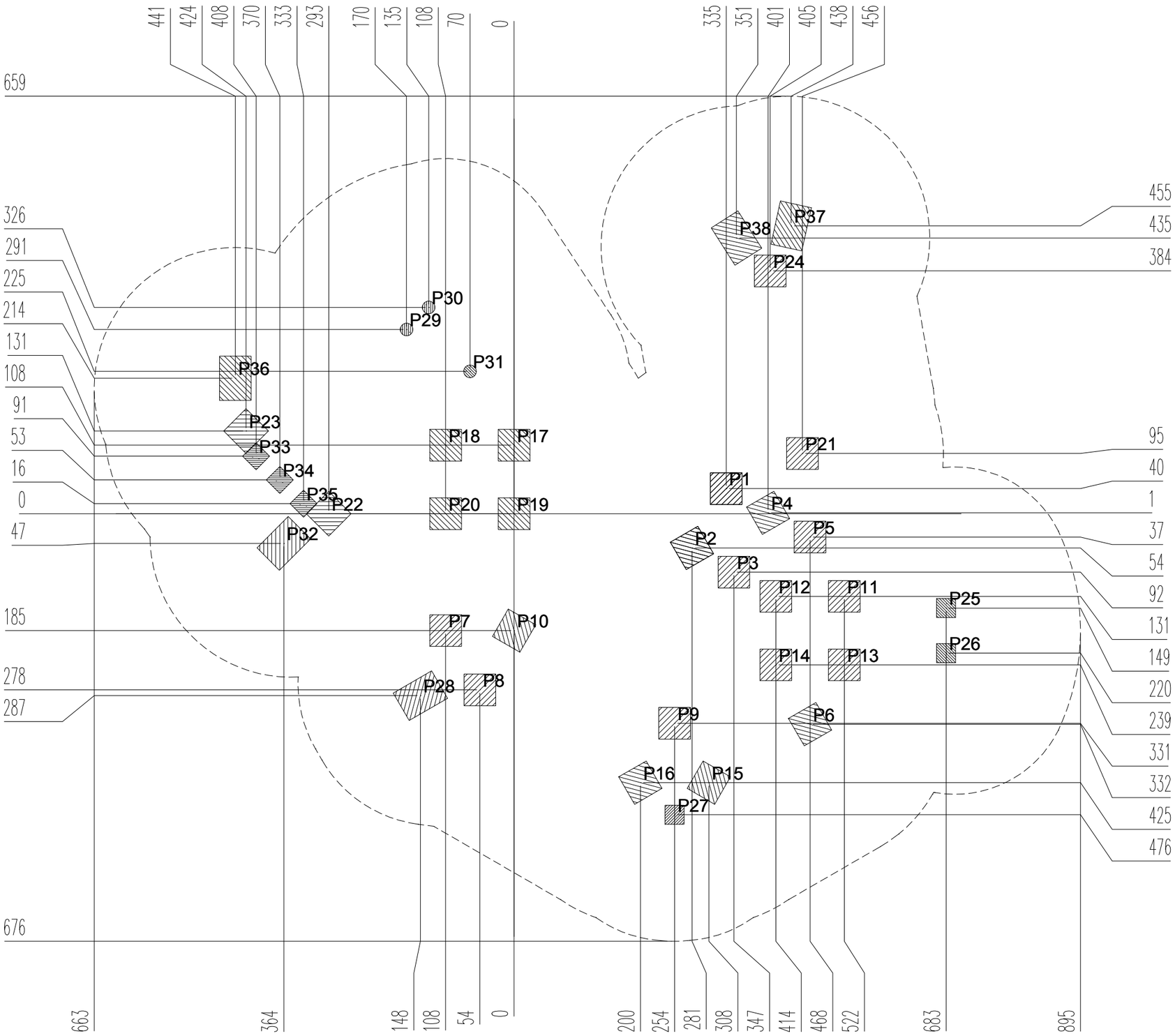

KOMPAN

NRC400101-1001

ID ----

MarPri

2024-07-22

Scale: MAX
Units: cm

Safety zone
- Norm: CSA Z614
- Perimeter: 53 m
- Area: 139.4 m²

Concrete
- Volume: 5.22 m³

Concreto - Béton - Hormigón
Cemento - Beton - Betong - Beton
Бетон - Betoniniti - Betão

C25/30 (B25)

$f_{ck,cube}$ = 30 N/mm²

Use the specified quality of concrete in accordance with all specifications from the concrete supplier taking the nature of the product to be installed into account.

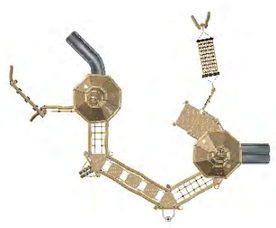

Overview of used Digging Holes and Footings

KOMPAN

NRC400101-1001

ID ----

MarPri

2024-07-22

Foundation			
Pos.	Hole Type	Profile [cm]	Depth [cm]
P1-P24	404	50x50	100
P25-P27	6	30x30	90
P28	405	50x70	100
P29-P30	2	ø20	90
P31	1	ø20	85
P32	405	50x70	100
P33-P35	6	30x30	90
P36-P38	405	50x70	100

Footing for Posts / Modules					
Pos.	Module No.	Profile [mm]	Length [cm]	Footing module	Post cap
P1-P2	TC02-0900-10027	-	90	-	-
P3	TC02-1400-10027	-	140	-	-
P4	TC02-1500-10027	-	150	-	-
P5	TC02-1800-10027	-	180	-	-
P6	TC02-2500-10027	-	250	-	-
P7	TC02-2800-10027	-	280	-	-
P8	TC02-2900-10027	-	290	-	-
P9-P10	TC02-3000-10027	-	300	-	-
P11-P14	TC01-2980-10027	-	298	-	-
P15-P16	TC02-3200-10027	-	320	-	-
P17-P20	TC01-3880-10027	-	388	-	-
P21	TC02-1400-10027	-	140	-	-
P22	TC02-3200-10027	-	320	-	-
P23	TC02-2200-10027	-	220	-	-
P24	TC02-1700-10027	-	170	-	-
P25-P26	RC600609-00083	-	-	2xCP123200-05	-
P27	RC600315-00003	-	-	CP122401-05	-
P28	RC500815-10001	-	-	-	-
P29-P31	RC600818-00083	-	-	2xCP122201-05 CP120400-05	-
P32	RC810100-10001	-	-	-	-
P33-P35	RC700100-00003	-	-	3xCP124201-10	-
P36	RC810200-10001	-	-	-	-
P37-P38	RC810300-10001	-	-	-	-

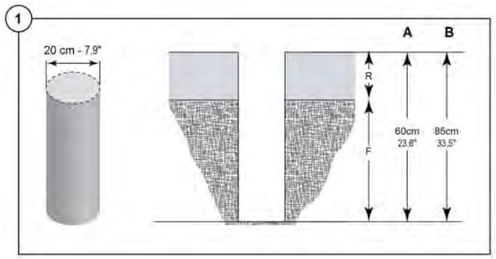

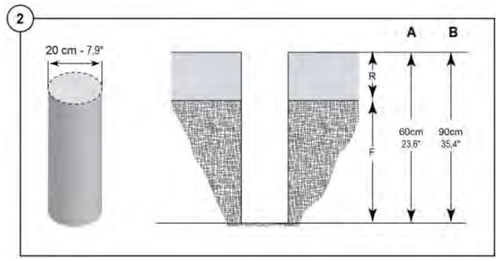

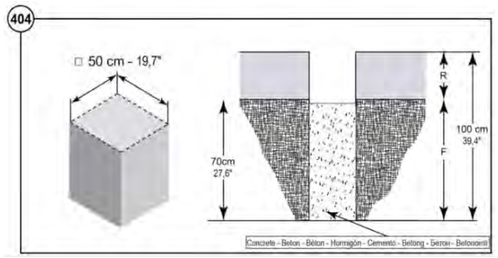

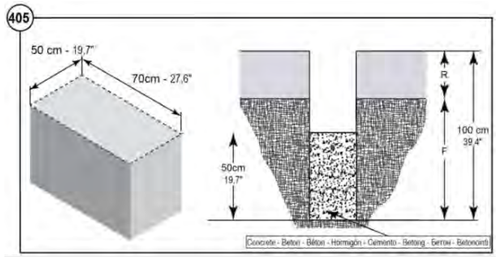

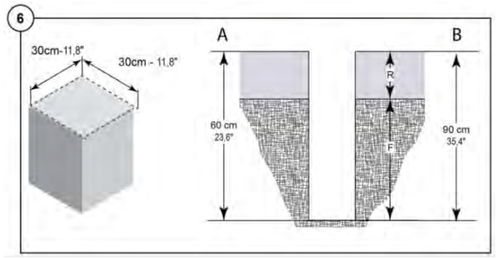

Safety zone / Fall height

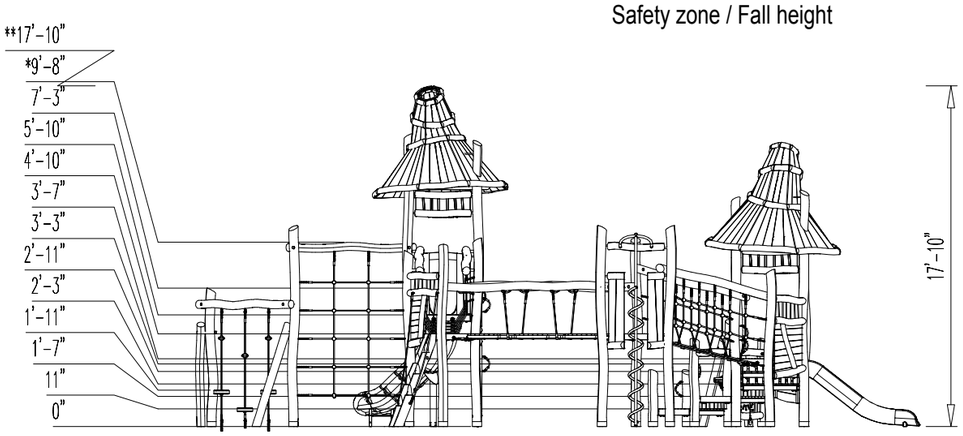

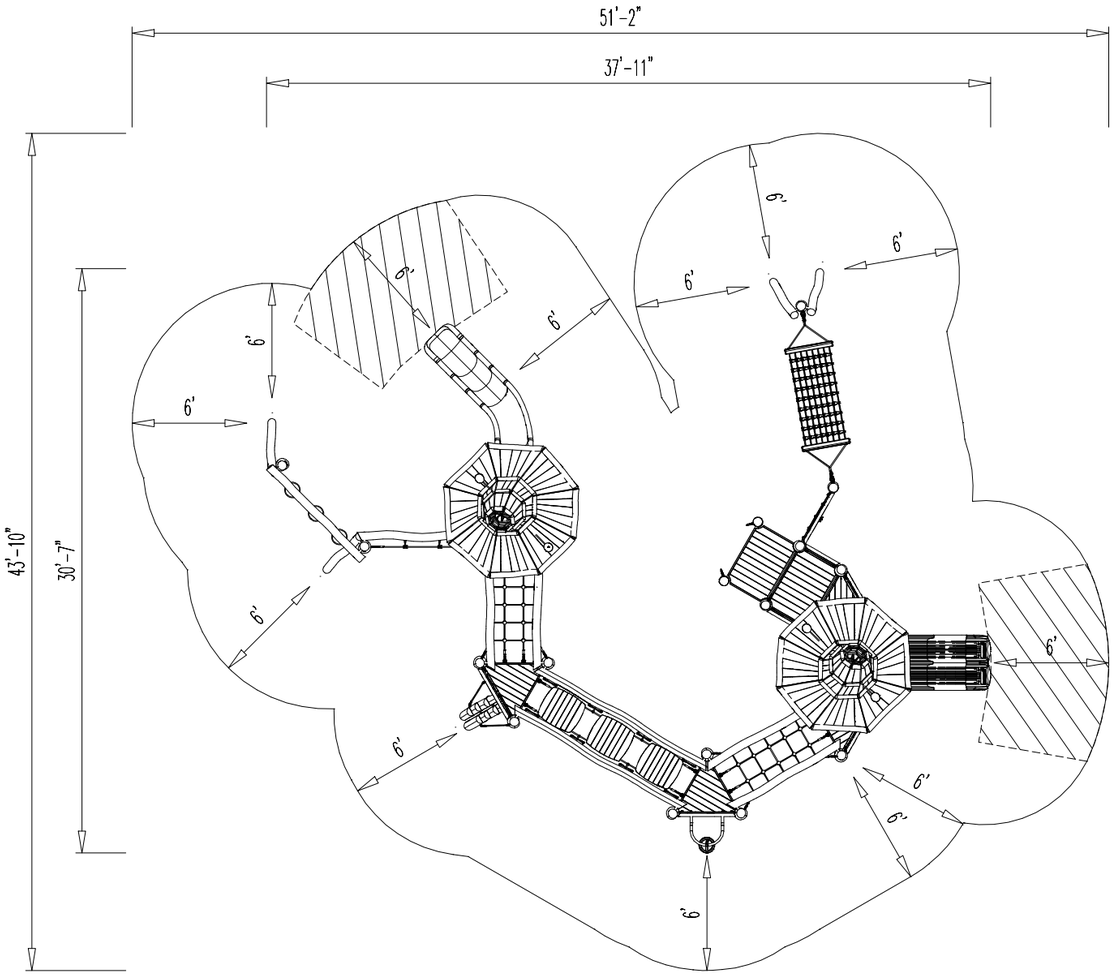

KOMPAN

NRC400101-1001

ID ----

MarPri

2024-07-22

Scale: MAX

Units: inch

ASTM F1487

* Fall height

** Total height

Safety zone / Fall height

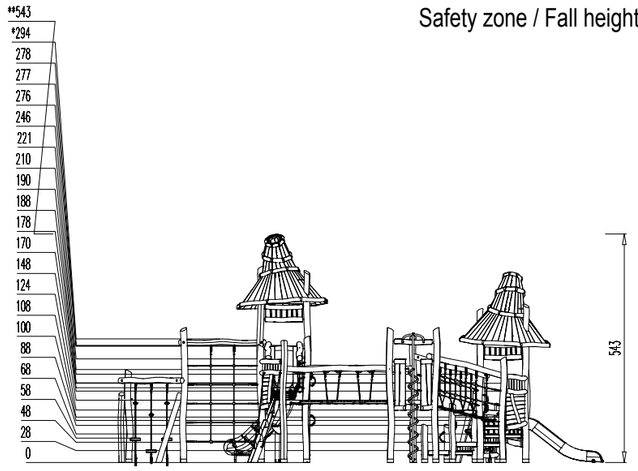

KOMPAN

NRC400101-1001

ID ----

MarPri

2024-07-22

Scale: MAX

Units: cm

CSA Z614

* Fall height

** Total height

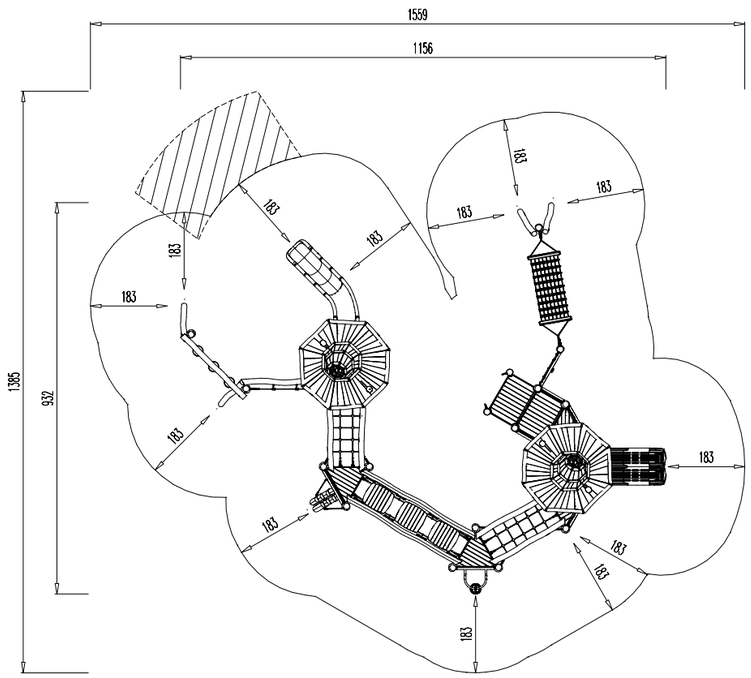

KOMPAN

NRC400101-1001

ID ----

MarPri

2024-07-22

- 2x RC100100-00000
- 4x RC100200-00000
- 2x RC100300-00000
- 2x TC02-0900-10027
- 2x TC02-1400-10027
- 1x TC02-1500-10027
- 1x TC02-1800-10027
- 1x TC02-2500-10027
- 1x TC02-2800-10027
- 1x TC02-2900-10027
- 2x TC02-3000-10027
- 4x TC01-2980-10027
- 3x TC02-3200-10027
- 4x TC01-3880-10027
- 4x RC110200-00000
- 1x TC02-2200-10027
- 1x RC100500-00000
- 2x RC100400-00000
- 1x TC02-1700-10027

KOMPAN

NRC400101-1001

ID ----

MarPri

2024-07-22

- 1x RC400400-00000
- 3x RC200200-00000
- 1x RC500815-10001
- 1x RC400200-00000
- 1x RC500618-00000
- 1x RC201000-00000
- 1x RC300200-00000
- 2x RC201200-00000

KOMPAN

NRC400101-1001

ID ----

MarPri

2024-07-22

- 1x RC400400-00000
- 3x RC200200-00000
- 1x RC500815-10001
- 1x RC400200-00000
- 1x RC500618-00000
- 1x RC201000-00000
- 1x RC300200-00000
- 2x RC201200-00000

KOMPAN

NRC400101-1001

ID ----

MarPri

2024-07-22

- 1x RC600609-00083
- 2x RC800100-00000
- 8x RC800400-00000
- 1x RC700700-00000
- 1x RC600315-00003
- 1x RC700200-00000
- 1x RC700800-00000
- 1x RC600818-00083
- 1x RC700600-00000
- 1x RC810100-10001
- 1x RC700100-00003
- 1x RC810200-10001
- 5x RO113066-0001
- 1x RC810400-00000
- 1x RC810300-10001
- 1x RC000200-00000

Modules Installation Sequence - Step 3 | ViewType-K2

KOMPAN

NRC400101-1001

ID ----

MarPri

2024-07-22

- 1x RC600609-00083
- 2x RC800100-00000
- 8x RC800400-00000
- 1x RC700700-00000
- 1x RC600315-00003
- 1x RC700200-00000
- 1x RC700800-00000
- 1x RC600818-00083
- 1x RC700600-00000
- 1x RC810100-10001
- 1x RC700100-00003
- 1x RC810200-10001
- 5x RO113066-0001
- 1x RC810400-00000
- 1x RC810300-10001
- 1x RC000200-00000

Spinner Bowl

ELE400024

Item no. ELE400024-3717BL	
General Product Information	
Dimensions LxWxH	1'8"x1'10"x1'12"
Age group	5 - 12
Play capacity (users)	1
Color options	

This wildly or mildly spinning piece with its cute rounded design evokes squeals of joy when children rotate again and again. With its easily accessible, tilted spinning bowl it invites children of all abilities and a wide age span to play. The small footprint allows for placing 2-3 Spinner Bowls together, encouraging social play. The variety of play opportunities include sitting in, on edge of, pushing, pulling or even standing in the spinner bowl. these make the Spinner Bowl a long-time attraction. The tilted bowl allows the child to adjust the spinning speed with their body movements. This trains the logical thinking to speed up by scooping up or slow down by spreading arms and legs out. Spinner Bowls train the sense of balance, which is mandatory for concentration skills and the ability to sit still. Pushing or being pushed by others trains social-emotional skills such as turn-taking.

Data is subject to change without prior notice.

Spinner Bowl

ELE400024

The Spinner Bowl is made of recyclable PE. The bowl is moulded in one piece with integrated metal thread bushings and a water drain hole to ensure high durability in all climates around the world.

Heavy duty engineered bearing system with single row deep groove ball bearings with rubber seals. The fully closed bearing construction is lifetime lubricated and maintenance free.

The steel surfaces are hot-dip galvanized inside and outside with lead-free zinc. The galvanization has excellent corrosion resistance in outside environments and requires minimal maintenance.

Item no. ELE400024-3717BL

Installation Information		
Max. fall height		1'12"
Safety surfacing area		149ft²
Total installation time		1.2
Excavation volume		0.14yd³
Concrete volume		0.08yd³
Footing depth (standard)		2'11"
Shipment weight		44lbs
Anchoring options	In-ground	✔
	Surface	✔

Warranty Information	
Hollow PE Parts	10 years
Bearing construction	5 years
Hot dip galvanized steel	Lifetime
Hardware	10 years
Spare parts guaranteed	10 years

The Spinner Bowl is available in five different color options.

The sand colored variant is made of rotomolded stone mixed PE material with non skid surface texture. Minor differences in the stone mix visuality of the material are to be expected.

GreenLine versions in a dark teal color are designed with molded PP parts which consist of 25% recycled post-consumer waste and 75% virgin material. GreenLine ensures the lowest possible CO2e emission factor.

Elevated activities **0**	Accessible elevated activities	Accessible ground level activities	Accessible ground level play types
Present	**0**	**1**	**1**
Required	**0**	**1**	**1**

Data is subject to change without prior notice.

Sustainability

Cradle to Gate A1-A3	Total CO_2 emission	CO_2e/kg	Recycled materials
	kg CO_2e	kg CO_2e/kg	%
ELE400024-3717BL	56.00	3.04	29.70
ELE400024-3717DT	54.20	2.94	37.60

The overall framework applied for these factors is the Environmental Product Declaration (EPD), which quantifies "environmental information on the life cycle of a product and enable comparisons between products fulfilling the same function" (ISO, 2006). This follows the structure and applies a Life-Cycle Assessment approach to the entire Product stage from raw material through manufacturing (A1-A3))

Kompan A/S
C.F. Tietgens Boulevard 32C
DK-5220 Odense SØ
Denmark

Validation of CO_2 calculation method
BUREAU VERITAS
HSE Denmark A/S

Validation of CO_2 calculation of: Freestanding play equipment

Data version no. 2021-09-27

The CO_2 calculation and data are in compliance with the principles of a carbon footprint impact according to the GHG protocol (Greenhouse Gas Protocol), Scope 3, cradle to gate related to all individual components in the product category: "Freestanding play equipment" represented by item no.: GXY916012-3417.

(Scope 3 emissions include emission sources in the upstream and downstream value chain).

Date: 15. October 2021 | Valid until: 15. October 2023
Validated by:

Bente Hviid, Senior Consultant

Peter Bendtsen, Senior Consultant

Validation based on report: Validation of CO_2 calculation of 8 categories of Kompan product line, version 1.0, prepared by: Bureau Veritas HSE, Denmark: Bente Hviid and Peter Bendtsen.

Publication date: 15. October 2021

By Bureau Veritas HSE
www.bureauveritas.dk
+45 7731 1000

Data is subject to change without prior notice.

Spinner Bowl

ELE400024

* Max fall height | ** Total height | *** Safety surfacing area

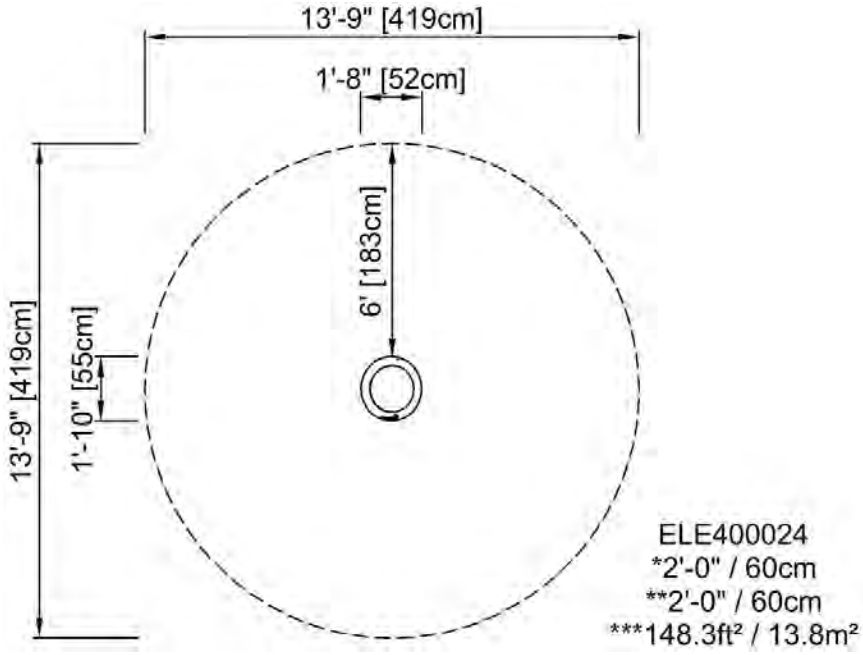

* Max fall height | ** Total height

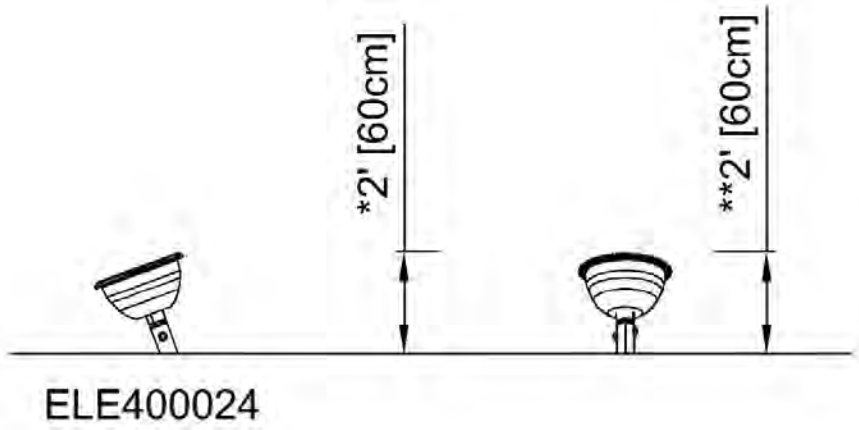

Click to see TOP VIEW

Click to see SIDE VIEW

Data is subject to change without prior notice.

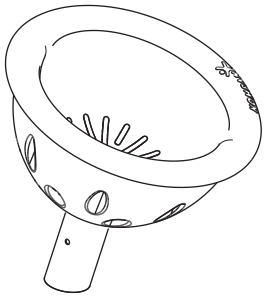

KOMPAN

ELE400024-3717

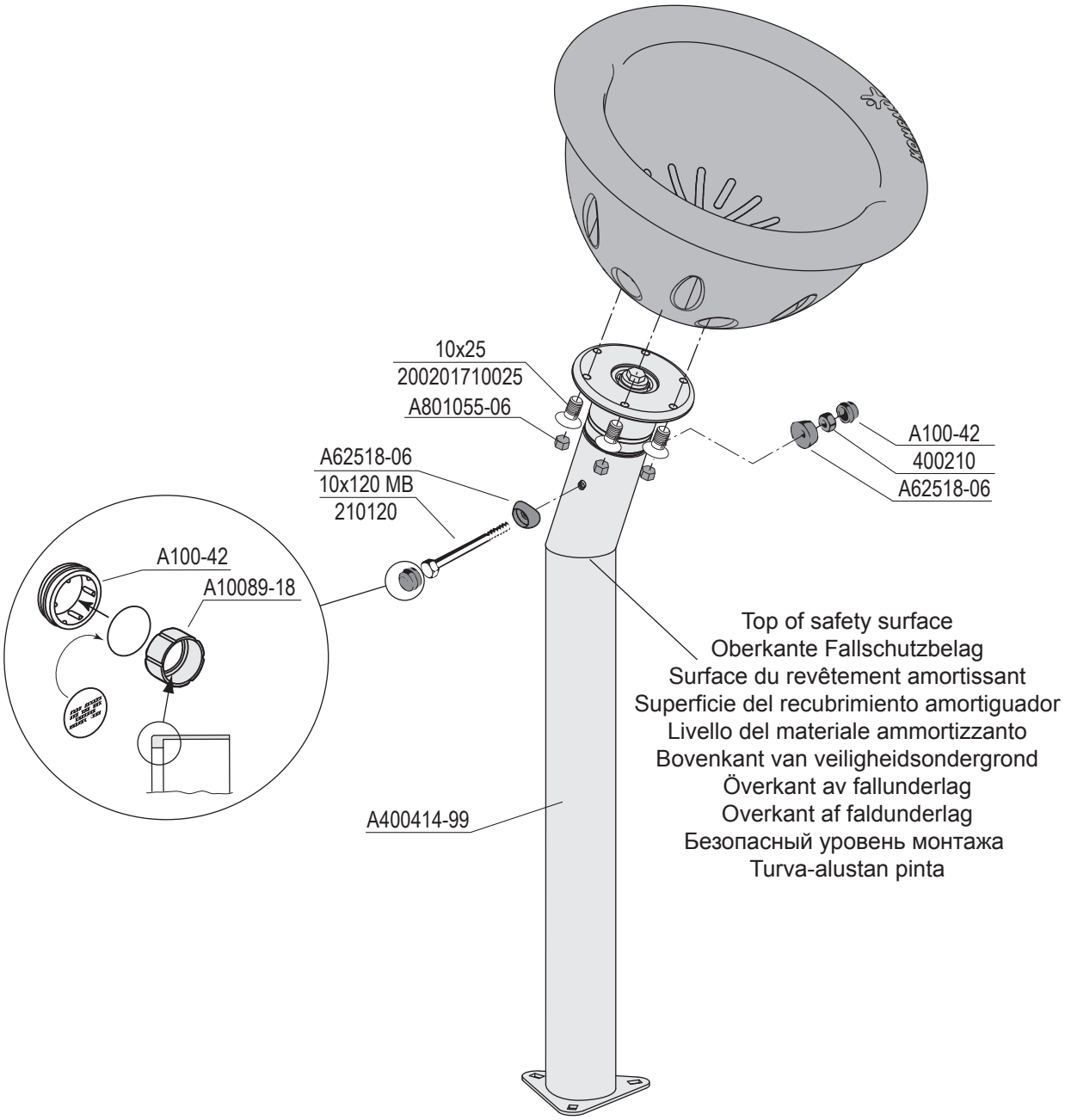

VLE4000243717-01 20110301 MarSky

Copyright©KOMPAN A/S

Safety zone in accordance with EN 1176/AS4685
Sicherheitsabstand gemäß EN 1176/AS4685
Espace d'évolution selon EN 1176/AS4685
Zona de seguridad según EN 1176/AS4685
Distanze di sicurezza in conformità con lo standard EN 1176/AS4685
Veiligheidsgebied in overeenstemming met EN 1176/AS4685
Säkerhetsområde enl EN 1176/AS4685
Sikkerhedsareal iht. EN 1176/AS4685
Зона безопасности в соответствии с EN 1176/AS4685
EN1176/AS4685-normin mukainen turva-alue

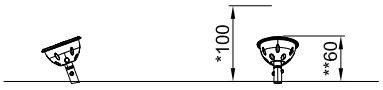

ELE400024
1:100

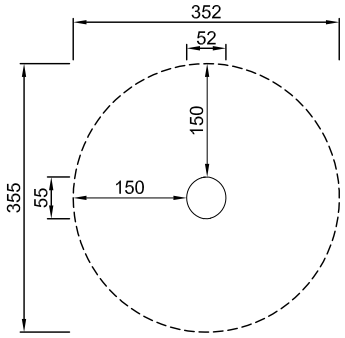

ELE400024
*100cm
**60cm
***9.8m²
1:100

* Free height of fall
Freie Fallhöhe
Hauteur de chute libre
Altura de caída libre
Altezza di caduta libera
Vrije valhoogte
Fri fallhöjd
Fri faldhøjde
Высота свободного падения
Vapaa putoamiskorkeus

All measurements are in cm
Alle Maßangaben in cm
Toutes les dimensions sont indiquées en cm
Todas las medidas están indicadas en cm
Tutte le misure sono in cm
Alle afmetingen zijn in cm
Alla mått är angivna i cm
Alle mål er angivet i cm
Все измерения в см.
Kaikki ohjeessa mainitut mitat ovat senttimetrejä.

Please note: The safety zone shown on this drawing is in accordance with EN 1176/AS4685. There may be some locations where a larger safety zone is required. If in doubt, please contact your play consultant.

Achtung: Der angegebene Sicherheitsabstand entspricht EN 1176/AS4685. Bestimmte Länder schreiben größere Sicherheitsabstände vor. Bitte wenden Sie sich in Zweifelsfällen an Ihren Berater.

Attention : l'espace d'évolution montré est conforme à EN 1176/AS4685. Dans certains pays, un espace d'évolution plus grand peut être exigé. Prière de contacter notre conseiller en cas de doute.

Observe: La zona de seguridad demostrada en este dibujo cumple con EN 1176/AS4685. En algunos sitios puede ser necesaria una zona de seguridad más grande. En caso de tener alguna duda, por favor póngase en contacto con nuestro consultor.

Attenzione: la distanza di sicurezza specificata è conforme ai requisiti EN 1176/AS4685. In alcuni paesi, le norme locali possono richiedere distanze di sicurezza maggiori. In caso di dubbi, contattare il nostro consulente.

N.B.: het getoonde veiligheidsgebied is in overeenstemming met EN 1176/AS4685. In sommige landen kan een groter veiligheidsgebied vereist zijn. In geval van twijfel onze adviseur raadplegen.

Obs: Det markerade säkerhetsområdet följer EN 1176/AS4685. I vissa länder kan det finnas krav på större säkerhetsområde. Kontakta vänligen vår konsulent om du är osäker.

Obs.: Det viste sikkerhedsareal er i overensstemmelse med EN 1176/AS4685. I nogle lande kan der være krav om større sikkerhedsareal. Kontakt venligst vores konsulent ved tvivlsspørgsmål.

Внимание: Зона безопасности указана в соответствии с EN 1176/AS4685. Возможны случаи, когда требуется увеличение зоны безопасности. В затруднительных случаях обращайтесь к Вашему консультанту.

Huom: Tämän piirustuksen turva-alue on EN1176/AS4685-normin mukainen. Joissain sijoituspaikoissa saatetaan edellyttää suurempaa turva-aluetta. Jos olet epävarma, otathan yhteyttä KOMPANiin.

VLE400024371 7-01 20110301 MarSky

Copyright©KOMPAN A/S

Safety zone in accordance with ASTM 1487/CSA Z614
Sicherheitsabstand gemäß ASTM 1487/CSA Z614
Espace d'évolution selon ASTM 1487/CSA Z614
Zona de seguridad según ASTM 1487/CSA Z614
Distanze di sicurezza in conformità con lo standard ASTM 1487/CSA Z614
Veiligheidsgebied in overeenstemming met ASTM 1487/CSA Z614
Säkerhetsområde enl ASTM 1487/CSA Z614
Sikkerhedsareal iht. ASTM 1487/CSA Z614
Зона безопасности в соответствии с ASTM 1487/CSA Z614
ASTM 1487/CSA Z614-normin mukainen turva-alue

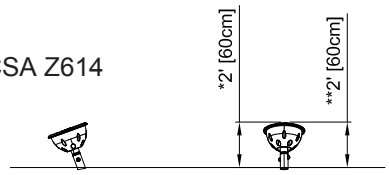

ELE400024
1:100

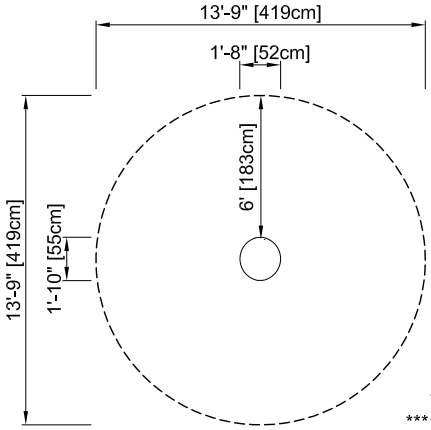

* Free height of fall
Freie Fallhöhe
Hauteur de chute libre
Altura de caída libre
Altezza di caduta libera
Vrije valhoogte
Fri fallhöjd
Fri faldhøjde
Высота свободного падения
Vapaa putoamiskorkeus

ELE400024
*2'-0" / 60cm
**2'-0" / 60cm
***148.3ft² / 13.8m²
1/8" = 1'-0"

Please note: The safety zone shown on this drawing is in accordance with ASTM 1487/CSA Z614. There may be some locations where a larger safety zone is required. If in doubt, please contact your play consultant.

Achtung: Der angegebene Sicherheitsabstand entspricht ASTM 1487/CSA Z614. Bestimmte Länder schreiben größere Sicherheitsabstände vor. Bitte wenden Sie sich in Zweifelsfällen an Ihren Berater.

Attention : l'espace d'évolution montré est conforme à ASTM 1487/CSA Z614. Dans certains pays, un espace d'évolution plus grand peut être exigé. Prière de contacter notre conseiller en cas de doute.

Observe: La zona de seguridad demostrada en este dibujo cumple con ASTM 1487/CSA Z614. En algunos sitios puede ser necesaria una zona de seguridadmás grande. En caso de tener alguna duda, por favor póngase en contacto con nuestro consultor.

Nota: A área de segurança ilustrada neste desenho está de acordo com a ASTM 1487/CSA Z614. Podem existir alguns territórios onde seja exigida uma área de segurança maior. Na dúvida, por favor contacte o seu consultor local da KOMPAN.

Attenzione: la distanza di sicurezza specificata è conforme ai requisiti ASTM 1487/CSA Z614. In alcuni paesi, le norme locali possono richiedere distanze di sicurezza maggiori. In caso di dubbi, contattare il nostro consulente.

N.B.: het getoonde veiligheidsgebied is in overeenstemming met ASTM 1487/CSA Z614. In sommige landen kan een groter veiligheidsgebied vereist zijn. In geval van twijfel onze adviseur raadplegen.

Obs: Det markerade säkerhetsområdet följer ASTM 1487/CSA Z614. I vissa länder kan det finnas krav på större säkerhetsområde. Kontakta vänligen vår konsulent om du är osäker.

Obs.: Det viste sikkerhedsareal er i overensstemmelse med ASTM 1487/CSA Z614. I nogle lande kan der være krav om større sikkerhedsareal. Kontakt venligst vores konsulent ved tvivlsspørgsmål.

Внимание: Зона безопасности указана в соответствии с ASTM 1487/CSA Z614. Возможны случаи, когда требуется увеличение зоны безопасности. В затруднительных случаях обращайтесь к Вашему консультанту.

Huom: Tämän piirustuksen turva-alue on ASTM 1487/CSA Z614-normin mukainen. Joissain sijoituspaikoissa saatetaan edellyttääsuurempaa turva-aluetta. Jos olet epävarma, otathan yhteyttä KOMPANiin.

VLE4000243717-01 20110301 MarSky

Copyright©KOMPAN A/S

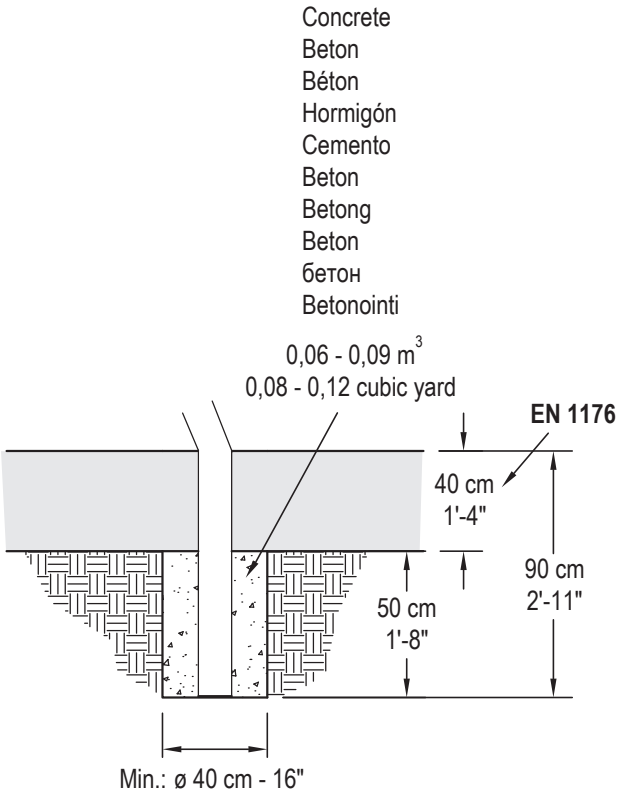

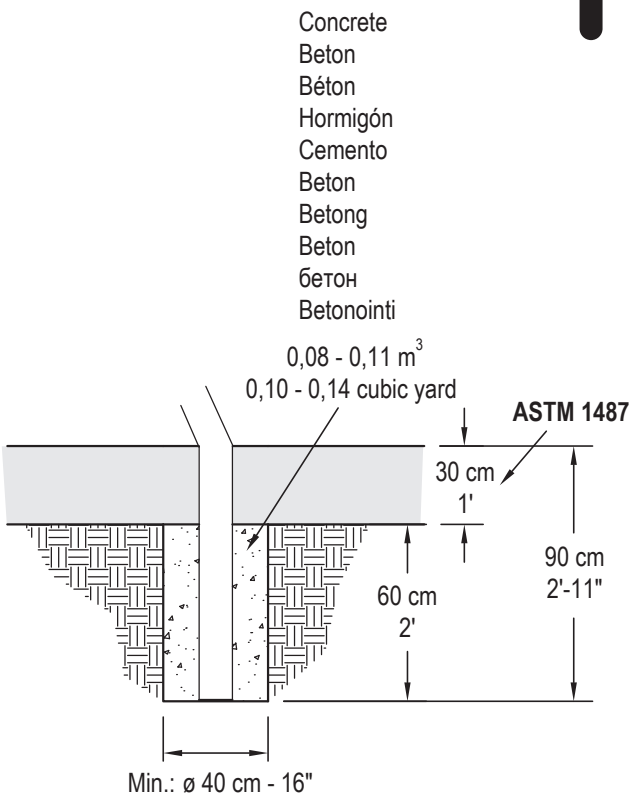

Spare parts:
Ersatzteile:
Pièces de rechange:
Piezas de recambio:
Parti di ricambio:
Reservedelen:
Reservdelar:
Reservedele:
Запчасти:
Varaosat:

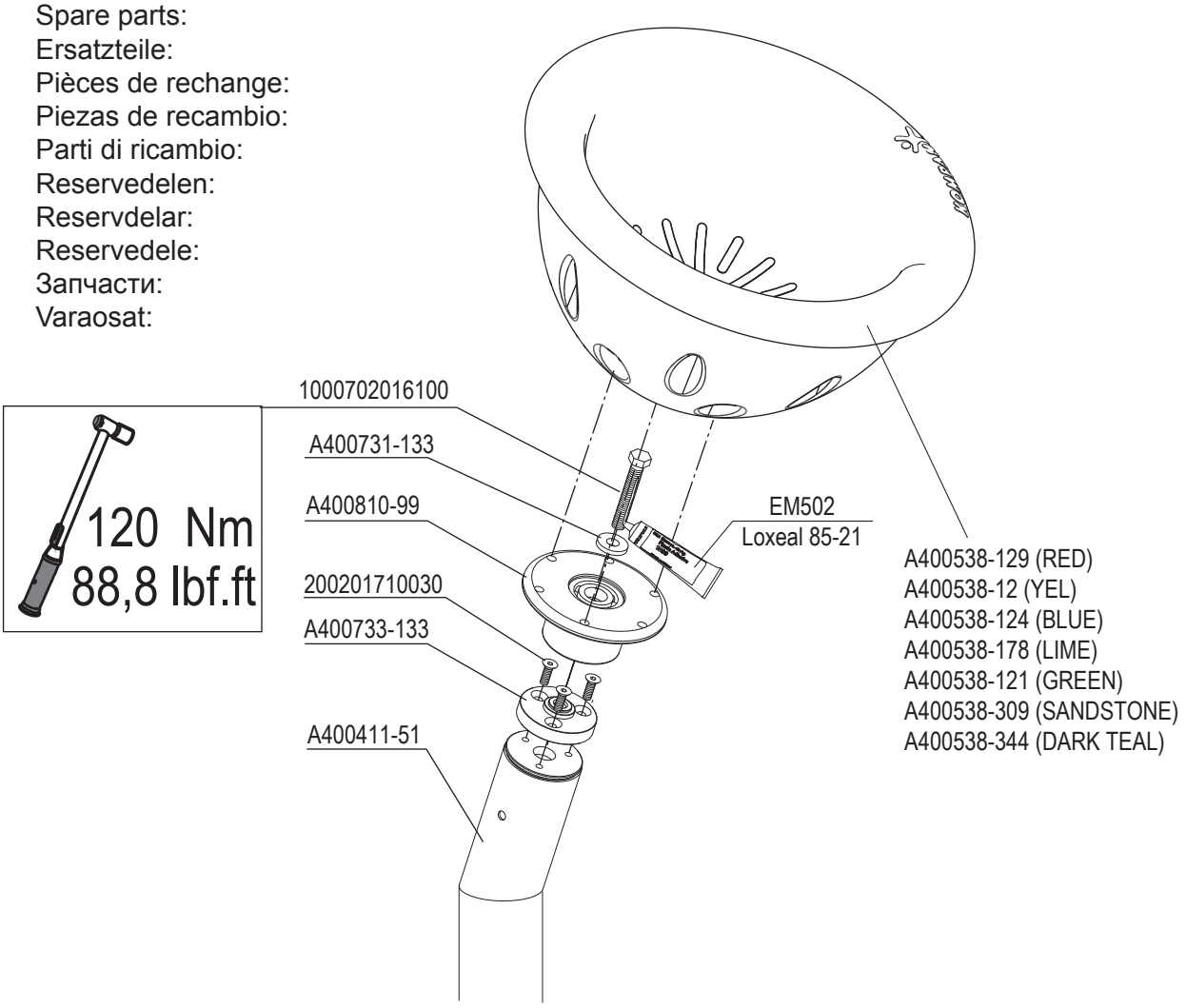

VLE4000243717-01 20110301 MarSky

Copyright©KOMPAN A/S

Waterlilies Balance Posts - 5 pcs

NRO820-0601

Item no. NRO820-0601	
General Product Information	
Dimensions LxWxH	7'1"x3'6"x1'1"
Age group	2 - 12
Play capacity (users)	2
Item color	

The Water Lilies Balance Posts appeal to children, and encourage physical make believe games with rules, for example, pretending the ground is water, and trying to stay out of the water. The Water Lilies invite jumping or balancing from one to the next. They can also be used as individual seats and are perfect for group conversation. The Water Lilies support children who are less confident, thanks to their width. When balancing from water lily to water lily, children train their proprioception and sense of balance. Balance and proprioception are fundamental skills for confidently managing the body in its surroundings. This is important for instance when navigating street traffic safely. Crossing the Water Lilies with friends trains turn-taking and negotiation. These are important social-emotional skills that are basic for the ability to form friendship and relate to peers.

Data is subject to change without prior notice.

Waterlilies Balance Posts - 5 pcs

NRO820-0601

Balance posts
Physical: sense of balance is trained, and bone density built when jumping between and off the pods. **Social-Emotional:** turn-taking and cooperation as well as room for a seated rest with friends.

Data is subject to change without prior notice.

Waterlilies Balance Posts - 5 pcs

NRO820-0601

All Organic Robinia products by KOMPAN are made of Robinia wood from sustainable European sources. On request it can be supplied as FSC® Certified (FSC® C004450).

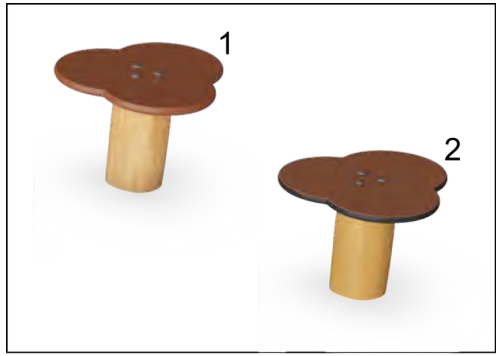

Balance post of ¾" EcoCore™. EcoCore™ is a highly durable, ecofriendly material, which is not only recyclable after use, but also consists of a core produced from +95% recycled post-consumer material from e.g., food packing waste in both core and colorful outer layer.

The Robinia wood can be supplied as untreated raw wood or painted with a brown colored transparent pigment that maintains the golden wood color of the wood.

Item no. NRO820-0601	
Installation Information	
Max. fall height	1'1"
Safety surfacing area	237ft²
Total installation time	2.4 hours
Excavation volume	0.27yd³
Concrete volume	0.1yd³
Footing depth (standard)	2'0"
Shipment weight	198lbs
Anchoring options	In-ground ✔
Warranty Information	
Robinia Wood	10 Years
Spare Parts Availability	10 Years

Elevated activities **0**	Accessible elevated activities	Accessible ground level activities	Accessible ground level play types
Present	**0**	**1**	**1**
Required	**0**	**1**	**1**

Data is subject to change without prior notice.

Sustainability Data

NRO820-0601

Cradle to Gate A1-A3	Total CO_2 emission	CO_2e/kg	Recycled materials
	kg CO_2e	kg CO_2e/kg	%
NRO820-0601	49.65	0.63	16.85

The overall framework applied for these factors is the Environmental Product Declaration (EPD), which quantifies "environmental information on the life cycle of a product and enable comparisons between products fulfilling the same function" (ISO, 2006). This follows the structure and applies a Life-Cycle Assessment approach to the entire Product stage from raw material through manufacturing (A1-A3))

Kompan A/S
C.F. Tietgens Boulevard 32C
DK-5220 Odense SØ
Denmark

Validation of CO_2 calculation method
BUREAU VERITAS
HSE Denmark A/S

Verification of CO_2 calculation of: Nature play

Data version no. 2023-10-05

The CO_2 calculation and data are in compliance with the principles of a carbon footprint impact according to the GHG protocol (Greenhouse Gas Protocol), Scope 3, cradle to gate related to all individual components in the product category: "Nature play" represented by item no.: NRO409-0621.

(Scope 3 emissions include emission sources in the upstream and downstream value chain).

Date: 30. October 2023 | Valid until: 30. October 2025
Verified by:

Julie Marie Vejsgaard Larsen, LCA & EPD Consultant

Verification based on report: Validation of CO_2 calculation of 9 categories of Kompan product line, version 1.0, prepared by: Bureau Veritas HSE, Denmark: Julie M. V. Larsen.

Publication date: 30. October 2023

By Bureau Veritas HSE
www.bureauveritas.dk
+45 7731 1000

Data is subject to change without prior notice.

Waterlilies Balance Posts - 5 pcs

NRO820-0601

* Max fall height | ** Total height | *** Safety surfacing area

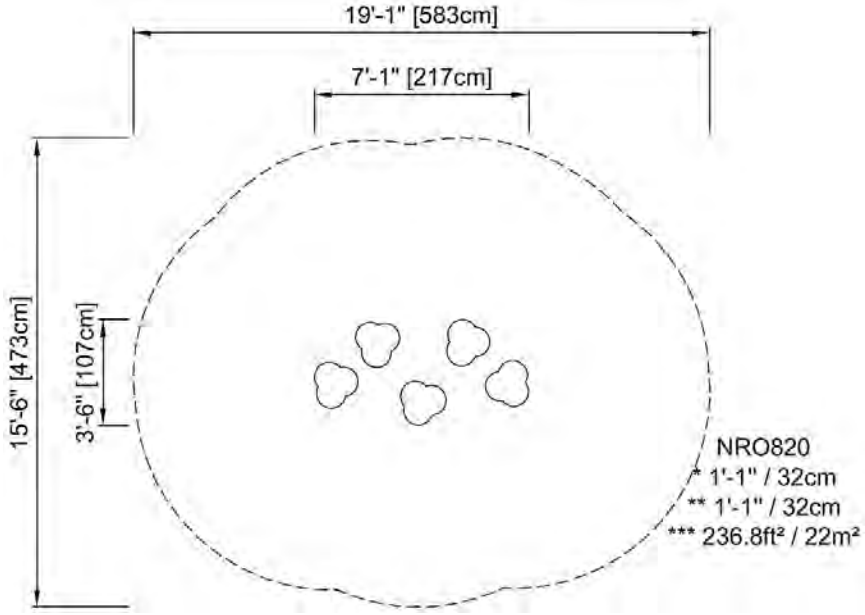

Click to see TOP VIEW

* Max fall height | ** Total height

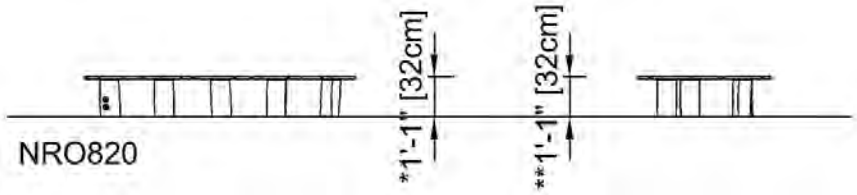

Click to see SIDE VIEW

Data is subject to change without prior notice.

KOMPAN

NRO820-0002/FSC
NRO820-0003
NRO820-0013
NRO820-0601/FSC
NRO820-0603/FSC
NRO820-0611/FSC
NRO820-0613/FSC
NRO820-1002/FSC
NRO820-1013

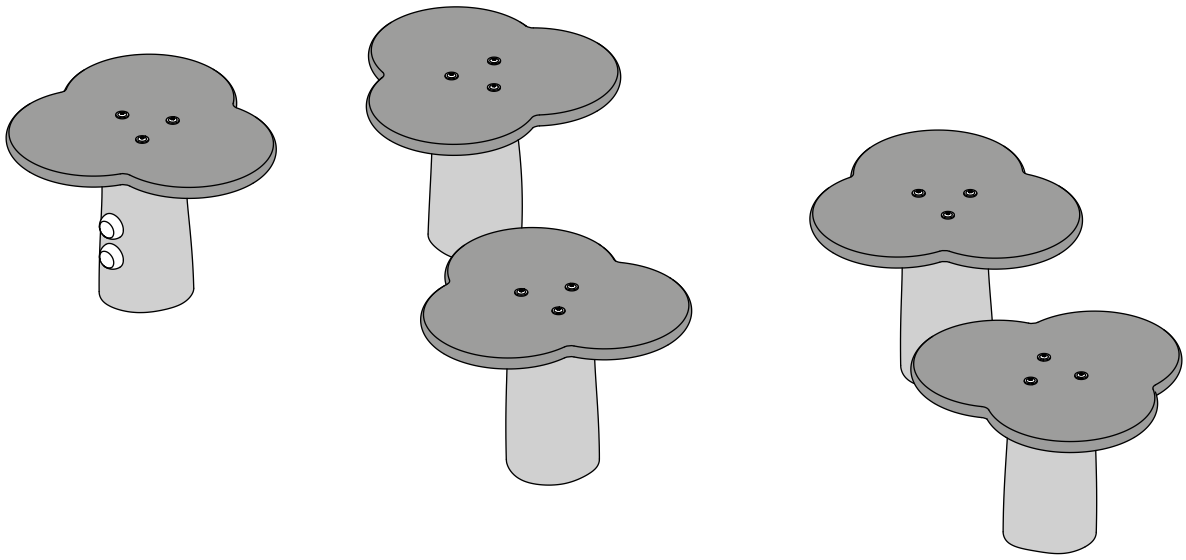

VNRO820XXXX 20160822 PetrJu

Copyright©KOMPAN A/S

Safety zone in accordance with EN 1176/AS4685
Sicherheitsabstand gemäß EN 1176/AS4685
Espace d'évolution selon EN 1176/AS4685
Zona de seguridad según EN 1176/AS4685
Distanze di sicurezza in conformità con lo standard EN 1176/AS4685
Veiligheidsgebied in overeenstemming met EN 1176/AS4685
Säkerhetsområde enl EN 1176/AS4685
Sikkerhedsareal iht. EN 1176/AS4685
Зона безопасности в соответствии с EN 1176/AS4685
EN1176/AS4685-normin mukainen turva-alue

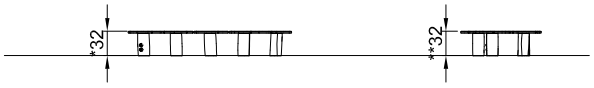

NRO820-0601
1:100

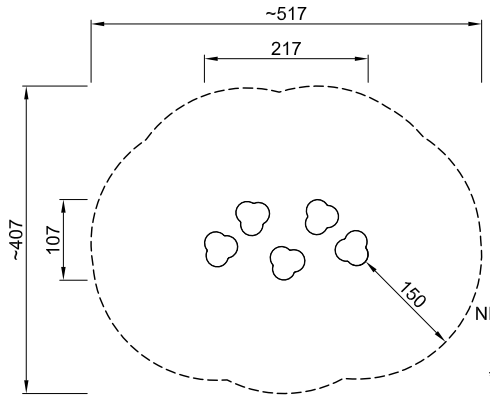

NRO820-0601
*32cm
**32cm
***~16.8m²
1:100

All measurements are in cm
Alle Maßangaben in cm
Toutes les dimensions sont indiquées en cm
Todas las medidas están indicadas en cm
Tutte le misure sono in cm
Alle afmetingen zijn in cm
Alla mått är angivna i cm
Alle mål er angivet i cm
Все измерения в см.
Kaikki ohjeessa mainitut mitat ovat senttimetrejä.

* Free height of fall
Freie Fallhöhe
Hauteur de chute libre
Altura de caída libre
Altezza di caduta libera
Vrije valhoogte
Fri fallhöjd
Fri faldhøjde
Высота свободного падения
Vapaa putoamiskorkeus

Please note: The safety zone shown on this drawing is in accordance with EN 1176/AS4685. There may be some locations where a larger safety zone is required. If in doubt, please contact your play consultant.

Achtung: Der angegebene Sicherheitsabstand entspricht EN 1176/AS4685. Bestimmte Länder schreiben größere Sicherheitsabstände vor. Bitte wenden Sie sich in Zweifelsfällen an Ihren Berater.

Attention : l'espace d'évolution montré est conforme à EN 1176/AS4685. Dans certains pays, un espace d'évolution plus grand peut être exigé. Prière de contacter notre conseiller en cas de doute.

Observe: La zona de seguridad demostrada en este dibujo cumple con EN 1176/AS4685. En algunos sitios puede ser necesaria una zona de seguridad más grande. En caso de tener alguna duda, por favor póngase en contacto con nuestro consultor.

Attenzione: la distanza di sicurezza specificata è conforme ai requisiti EN 1176/AS4685. In alcuni paesi, le norme locali possono richiedere distanze di sicurezza maggiori. In caso di dubbi, contattare il nostro consulente.

N.B.: het getoonde veiligheidsgebied is in overeenstemming met EN 1176/AS4685. In sommige landen kan een groter veiligheidsgebied vereist zijn. In geval van twijfel onze adviseur raadplegen.

Obs: Det markerade säkerhetsområdet följer EN 1176/AS4685. I vissa länder kan det finnas krav på större säkerhetsområde. Kontakta vänligen vår konsulent om du är osäker.

Obs.: Det viste sikkerhedsareal er i overensstemmelse med EN 1176/AS4685. I nogle lande kan der være krav om større sikkerhedsareal. Kontakt venligst vores konsulent ved tvivlsspørgsmål.

Внимание: Зона безопасности указана в соответствии с EN 1176/AS4685. Возможны случаи, когда требуется увеличение зоны безопасности. В затруднительных случаях обращайтесь к Вашему консультанту.

Huom: Tämän piirustuksen turva-alue on EN1176/AS4685-normin mukainen. Joissain sijoituspaikoissa saatetaan edellyttää suurempaa turva-aluetta. Jos olet epävarma, otathan yhteyttä KOMPANIin.

VNRO820XXXX 20160822 PetrJu

Copyright©KOMPAN A/S

Safety zone in accordance with ASTM 1487/CSA Z614
Sicherheitsabstand gemäß ASTM 1487/CSA Z614
Espace d'évolution selon ASTM 1487/CSA Z614
Zona de seguridad según ASTM 1487/CSA Z614
Distanze di sicurezza in conformità con lo standard ASTM 1487/CSA Z614
Veiligheidsgebied in overeenstemming met ASTM 1487/CSA Z614
Säkerhetsområde enl ASTM 1487/CSA Z614
Sikkerhedsareal iht. ASTM 1487/CSA Z614
Зона безопасности в соответствии с ASTM 1487/CSA Z614
ASTM 1487/CSA Z614-normin mukainen turva-alue

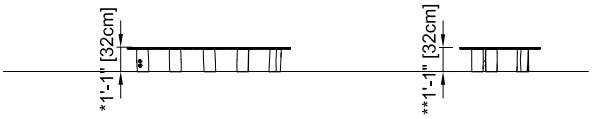

NRO820-0603
1:100

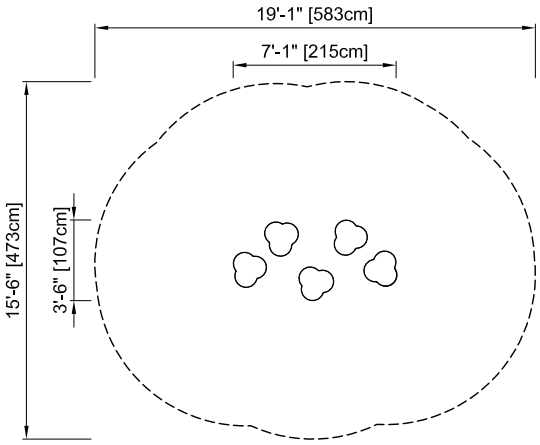

* Free height of fall
Freie Fallhöhe
Hauteur de chute libre
Altura de caída libre
Altezza di caduta libera
Vrije valhoogte
Fri fallhöjd
Fri faldhøjde
Высота свободного падения
Vapaa putoamiskorkeus

NRO820-0601
* 1'-1" / 32cm
** 1'-1" / 32cm
***236.8ft² / 22m²
1:100

Please note: The safety zone shown on this drawing is in accordance with ASTM 1487/CSA Z614. There may be some locations where a larger safety zone is required. If in doubt, please contact your play consultant.

Achtung: Der angegebene Sicherheitsabstand entspricht ASTM 1487/CSA Z614. Bestimmte Länder schreiben größere Sicherheitsabstände vor. Bitte wenden Sie sich in Zweifelsfällen an Ihren Berater.

Attention : l'espace d'évolution montré est conforme à ASTM 1487/CSA Z614. Dans certains pays, un espace d'évolution plus grand peut être exigé. Prière de contacter notre conseiller en cas de doute.

Observe: La zona de seguridad demostrada en este dibujo cumple con ASTM 1487/CSA Z614. En algunos sitios puede ser necesaria una zona de seguridadmás grande. En caso de tener alguna duda, por favor póngase en contacto con nuestro consultor.

Nota: A área de segurança ilustrada neste desenho está de acordo com a ASTM 1487/CSA Z614. Podem existir alguns territórios onde seja exigida uma área de segurança maior. Na dúvida, por favor contacte o seu consultor local da KOMPAN.

Attenzione: la distanza di sicurezza specificata è conforme ai requisiti ASTM 1487/CSA Z614. In alcuni paesi, le norme locali possono richiedere distanze di sicurezza maggiori. In caso di dubbi, contattare il nostro consulente.

N.B.: het getoonde veiligheidsgebied is in overeenstemming met ASTM 1487/CSA Z614. In sommige landen kan een groter veiligheidsgebied vereist zijn. In geval van twijfel onze adviseur raadplegen.

Obs: Det markerade säkerhetsområdet följer ASTM 1487/CSA Z614. I vissa länder kan det finnas krav på större säkerhetsområde. Kontakta vänligen vår konsulent om du är osäker.

Obs.: Det viste sikkerhedsareal er i overensstemmelse med ASTM 1487/CSA Z614. I nogle lande kan der være krav om større sikkerhedsareal. Kontakt venligst vores konsulent ved tvivlsspørgsmål.

Внимание: Зона безопасности указана в соответствии с ASTM 1487/CSA Z614. Возможны случаи, когда требуется увеличение зоны безопасности. В затруднительных случаях обращайтесь к Вашему консультанту.

Huom: Tämän piirustuksen turva-alue on ASTM 1487/CSA Z614-normin mukainen. Joissain sijoituspaikoissa saatetaan edellyttääsuurempaa turva-aluetta. Jos olet epävarma, otathan yhteyttä KOMPANiin.

Copyright©KOMPAN A/S

VNRO820XXXX 20160822 PetrJu

NRO820-0002/FSC
NRO820-0003
NRO820-0013

mm
in

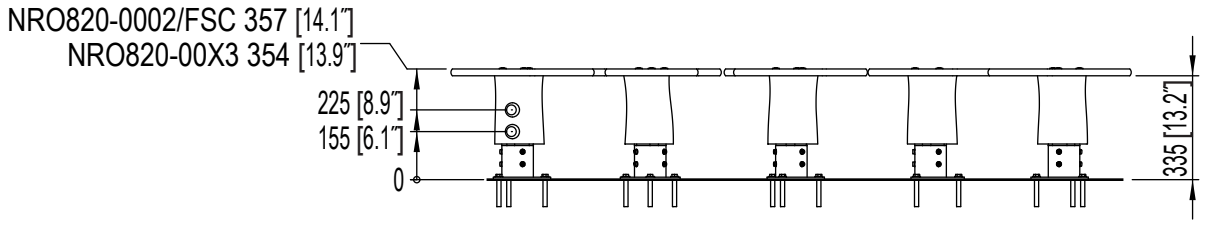

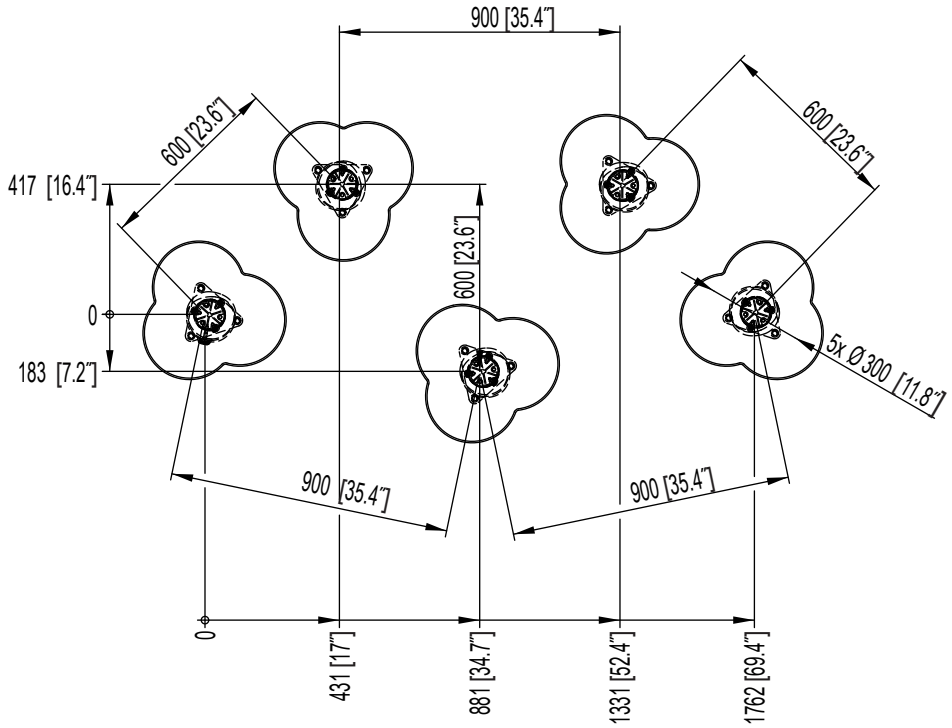

VNRO820XXXX 20160822 PetrJu

Copyright©KOMPAN A/S

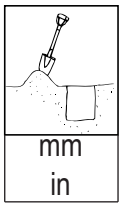

NRO820-0601/FSC
NRO820-0603/FSC
NRO820-0611/FSC
NRO820-0613/FSC

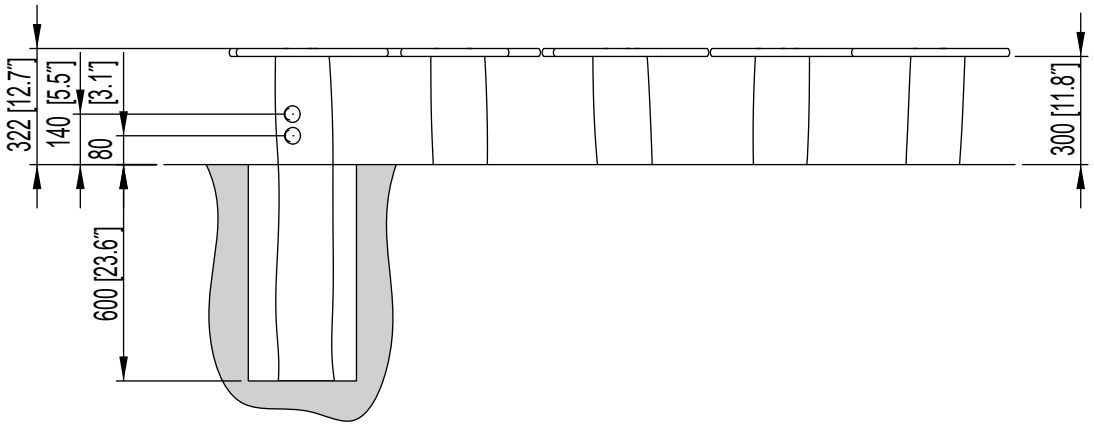

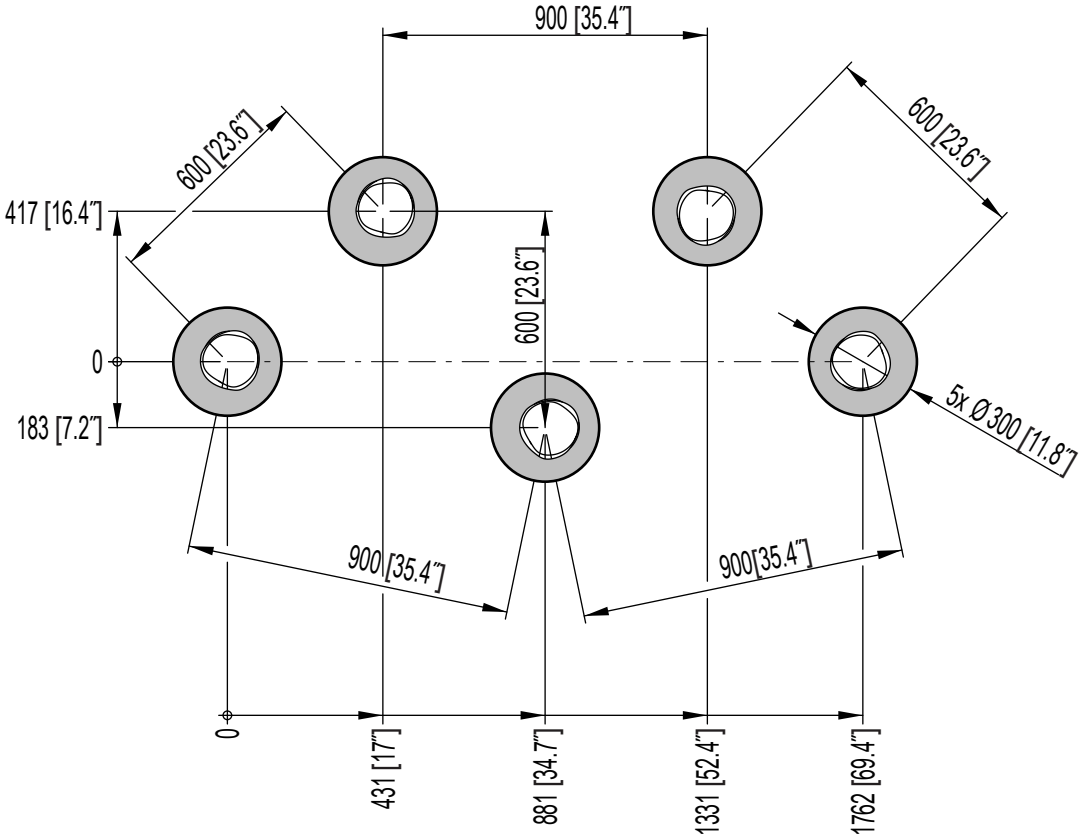

VNRO820XXXX 20160822 PetrJu

Copyright©KOMPAN A/S

NRO820-1002/FSC
NRO820-1013

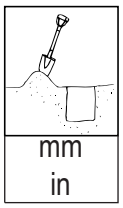

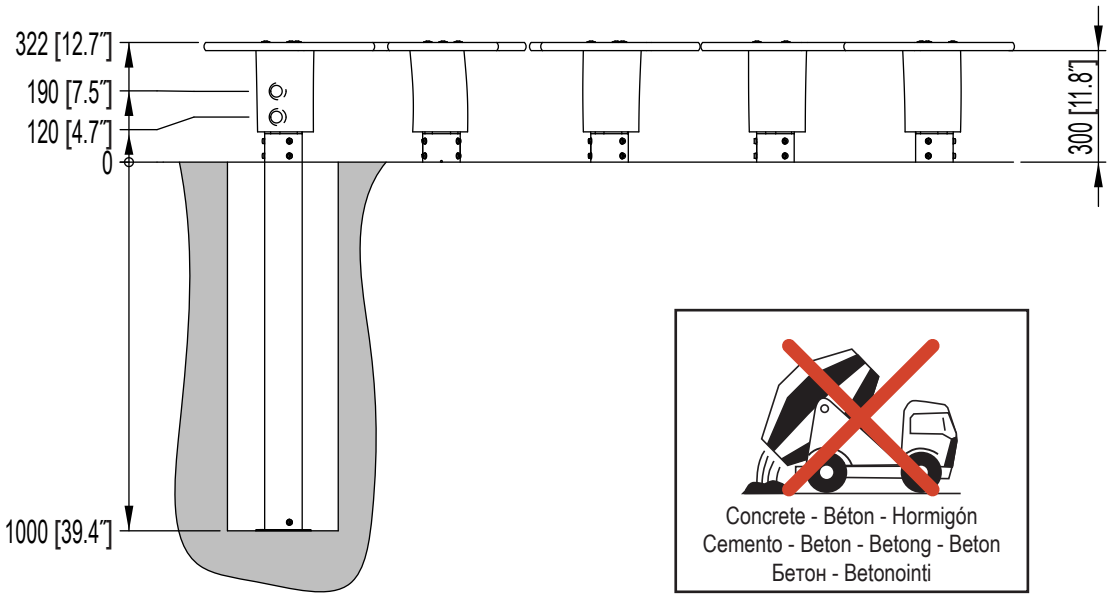

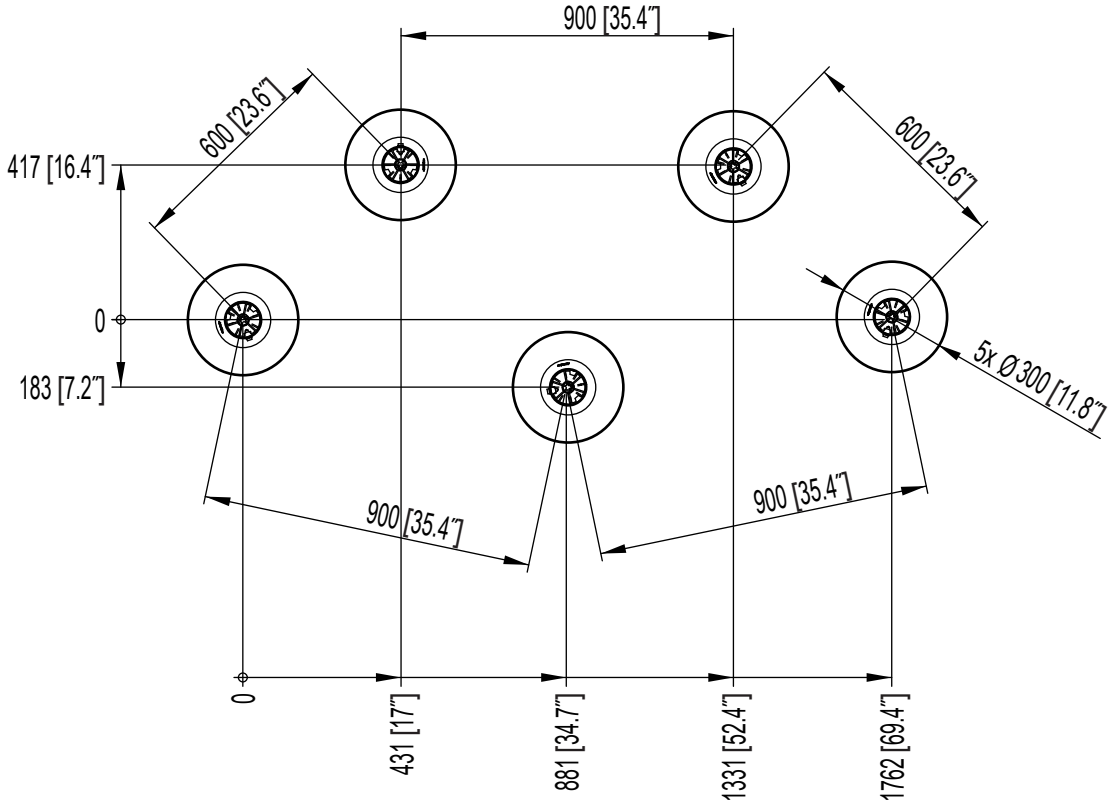

VNRO820XXXX 20160822 PetrJu

Copyright©KOMPAN A/S

Important! The concrete must be sufficiently hardened before the play item may be used.
Total volume of concrete: Min 0,080 m³

Wichtig! Vor der Inbetriebnahme des Spielreräts muß der Beton ausreichend abgebunden haben.
Betonverbrauch insgesamt: mind. 0,080 m³

Important! Le béton doit avoir suffisamment durci avant de mettre en service l'équipment de jeux.
Consommation totale de bèton: au minimum 0,080 m³

Importante! El hormigón debe estar suficentemente endurecido antes de comenzar a utilizar el equipo de juego. Consumo total de hormigón: Min. 0,080 m³

Importante! Prima de utilizzare le attrezzature da gioco, il cemento dve essere sufficientemente solidificato. Volume totale di cemento: min. 0,080 m³

Belangrijk! Het beton moet voldoende gehard zijn voordat het speeltoestel in gebruik wordt genomen.
Totale benodigde hoeveelheid beton: min. 0,080 m³

Viktigt! Betongen måste ha härdat tillräckligt innan lekredskapet börjar användas.
Total betongåtgång: min. 0,080 m³

Vigtigt! Betonen skal være tilstrækkeligt hærdet, før legeredskabet tages i brug.
Totalt betonforbrug: Min. 0,080 m³

Важно! Перед использованием сооружений убедитесь, что бетон затвердел.
Сумарный объем бетона: мин. 80 л.

HUOM! Betonivalun on oltava tarpeeksi kuiva, ennen kuin leikkivälinettä saa käyttää.
Betonoinnin minimikokonaismäärä; 0,080 m³

NRO820-0601/FSC
NRO820-0603/FSC
NRO820-0611/FSC
NRO820-0613/FSC

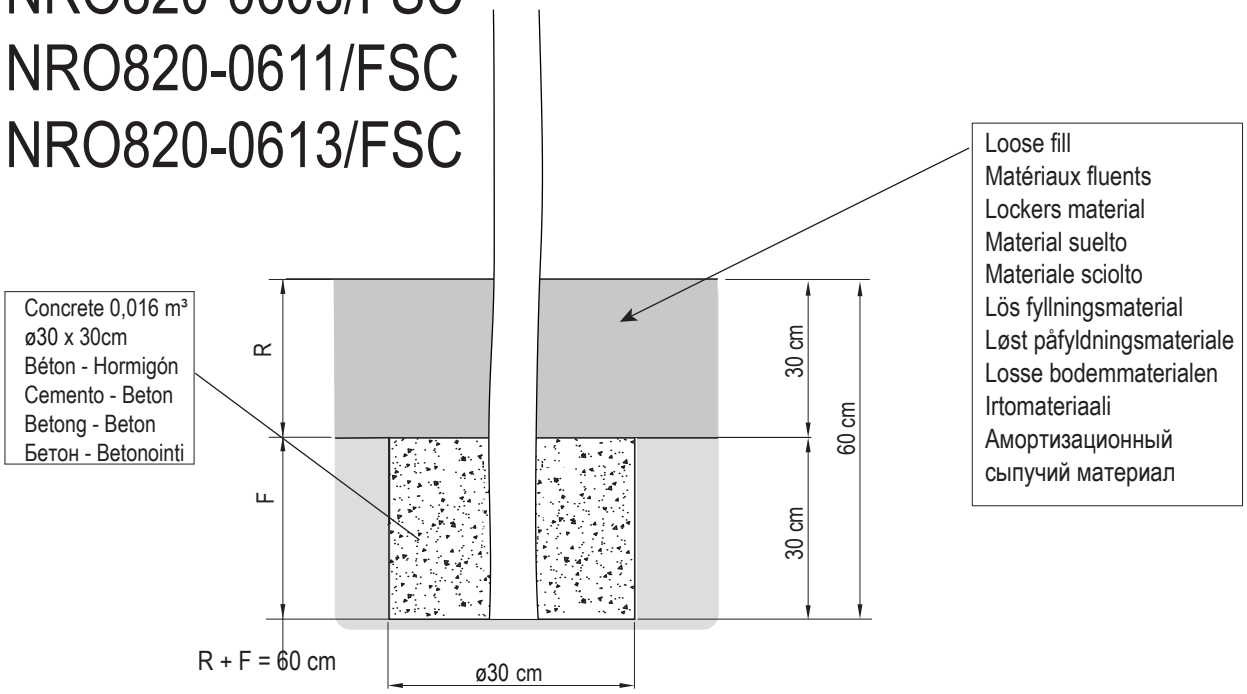

VNRO820XXXX 20160822 PetrJu

Copyright©KOMPAN A/S

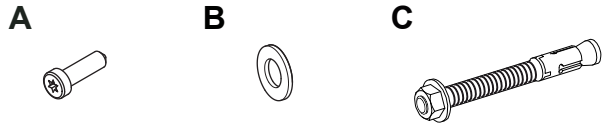

NRO820-0002/FSC
NRO820-0003
NRO820-0013

Rubber - Sol couté - Gummi - Goma Borracha - Gomma - Резина - Kumi	
35mm [1.4"]	1,3
55mm [2.2"]	2,4
75mm [3"]	3,5

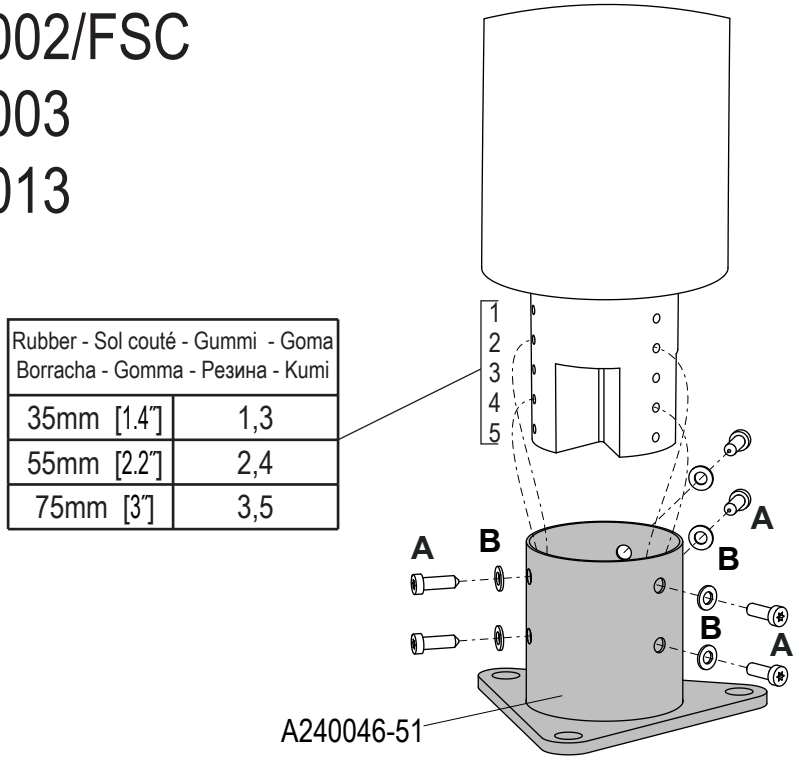

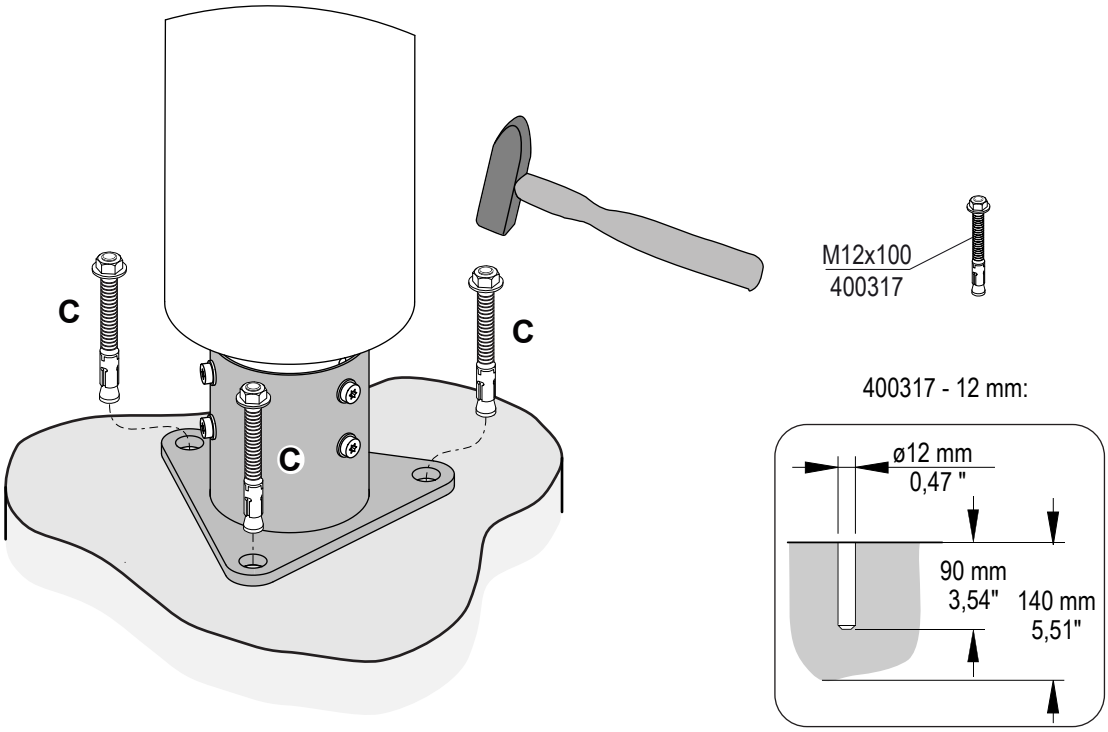

VNRO820XXXX 20160822 PetrJu

Copyright©KOMPAN A/S

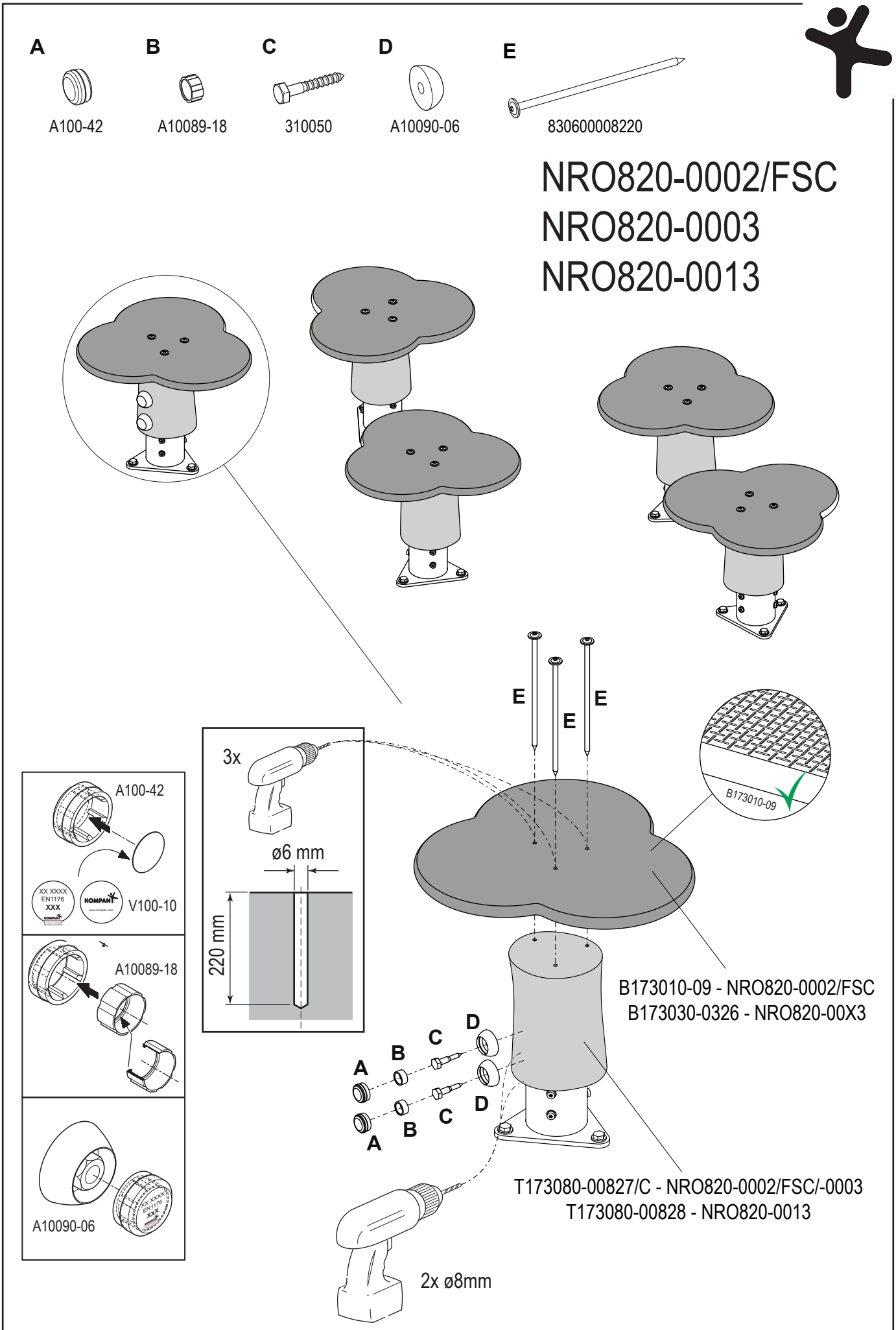

VNRO820XXXX 20160822 PetrJu

Copyright©KOMPAN A/S

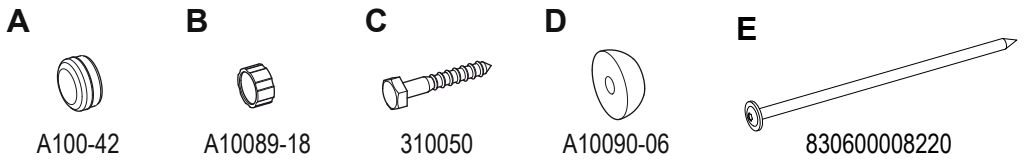

NRO820-0601/FSC
NRO820-0603/FSC
NRO820-0611/FSC
NRO820-0613/FSC

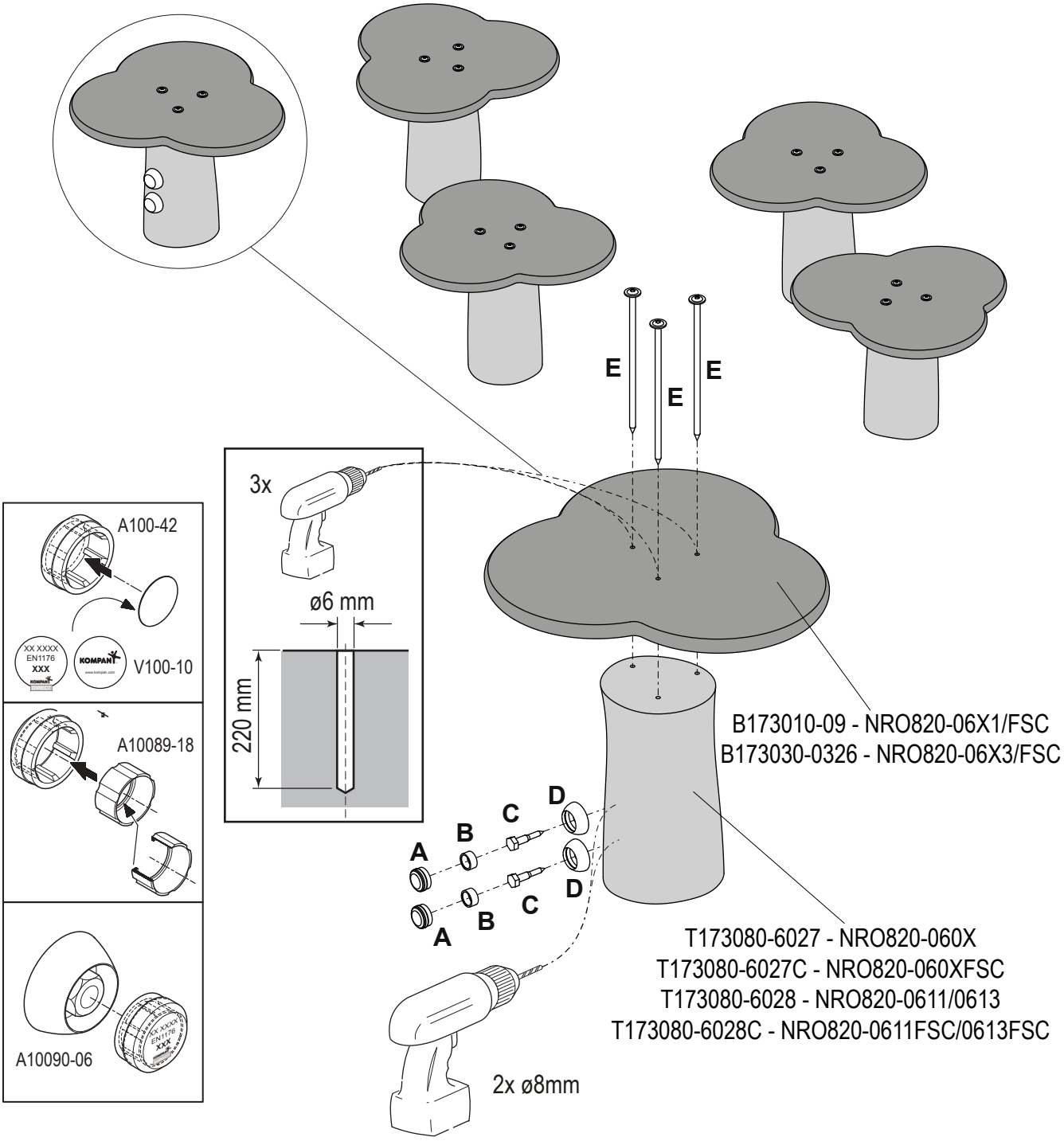

VNRO820XXXX 20160822 PetrJu

Copyright©KOMPAN A/S

A	B	C
210100408025	201301008016	400008-A2

NRO820-1002/FSC
NRO820-1013

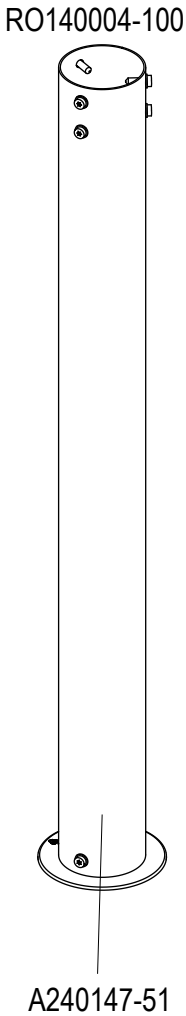

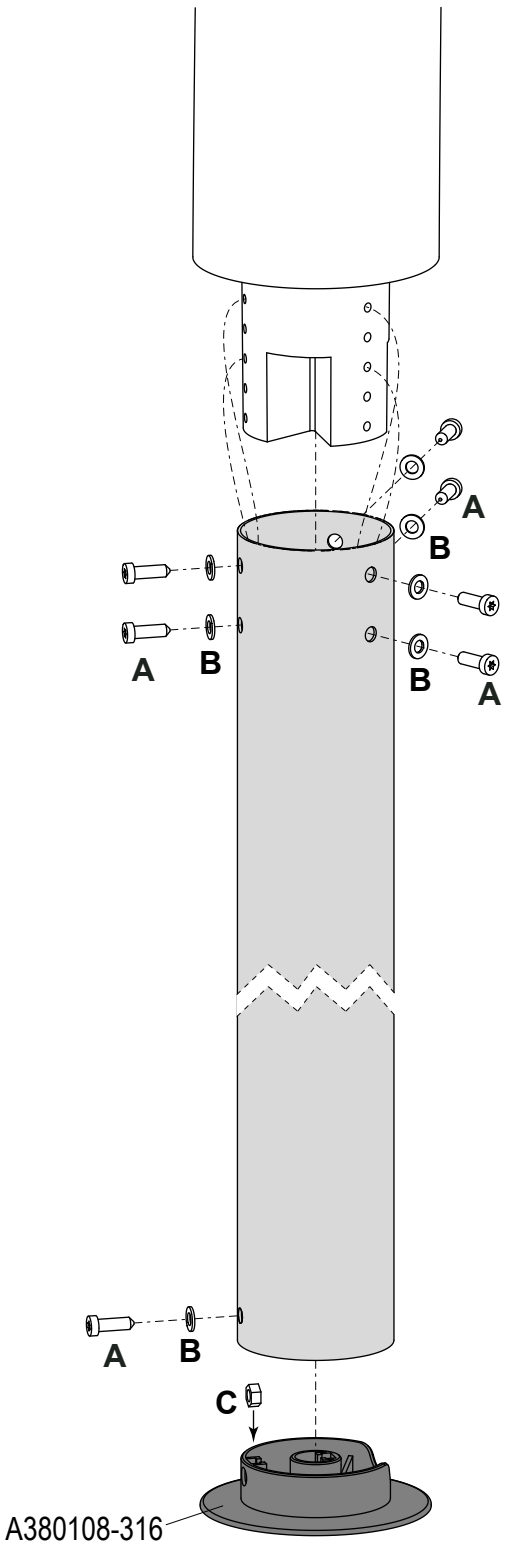

VNRO820XXXX 20160822 PetrJu

Copyright©KOMPAN A/S

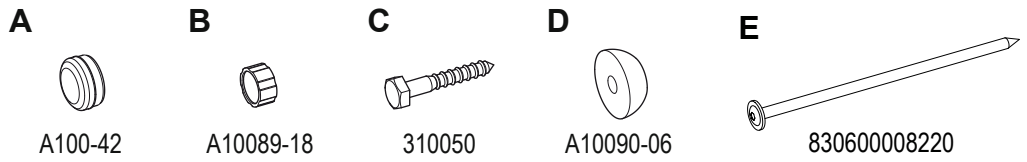

NRO820-1002/FSC
NRO820-1013

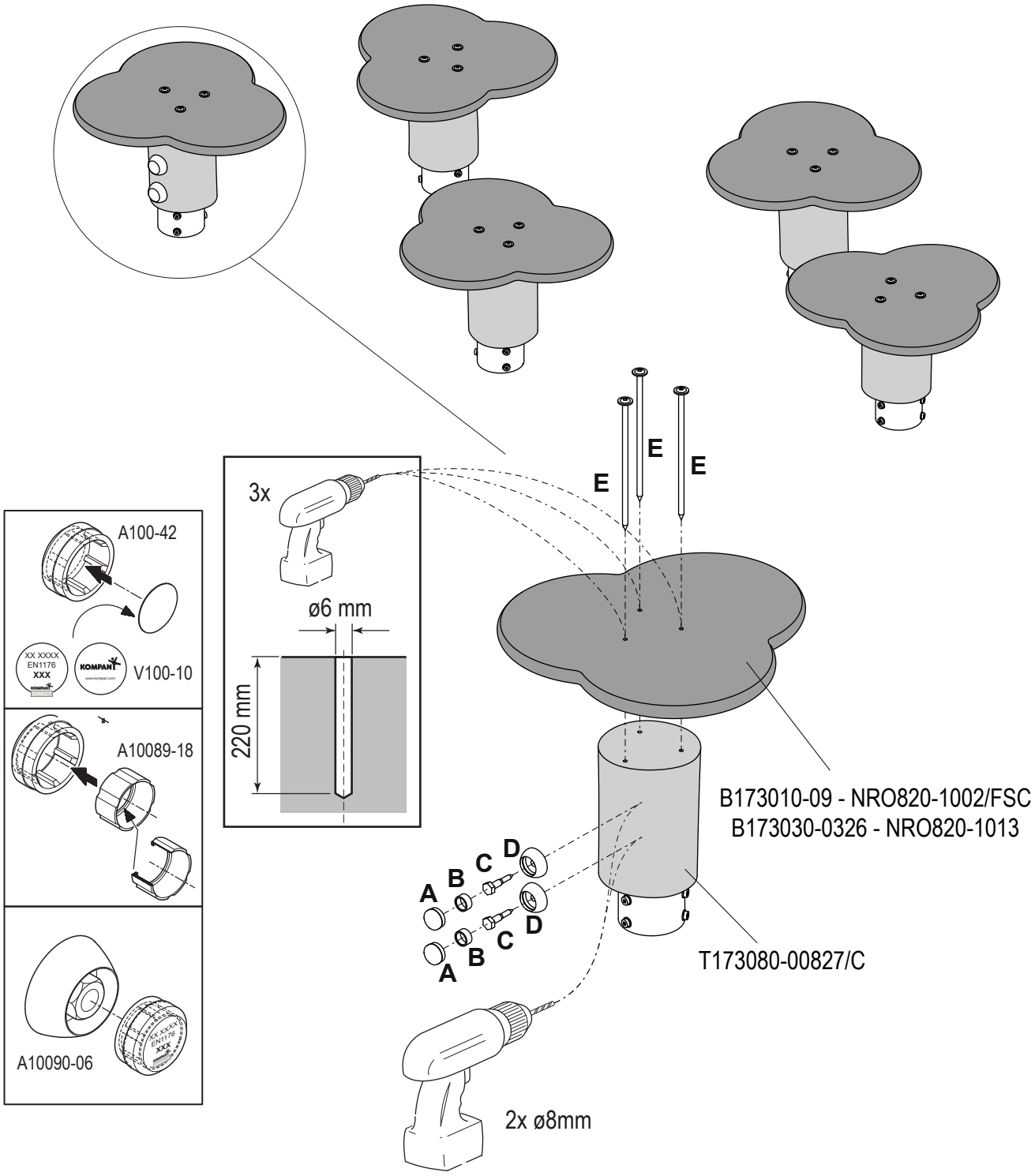

VNRO820XXXX 20160822 PetrJu

Copyright©KOMPAN A/S

Tree Climber

NRO834-1001

Item no. NRO834-1001	
General Product Information	
Dimensions LxWxH	21'4"x21'4"x17'1"
Age group	5 - 12
Play capacity (users)	34
Item color	

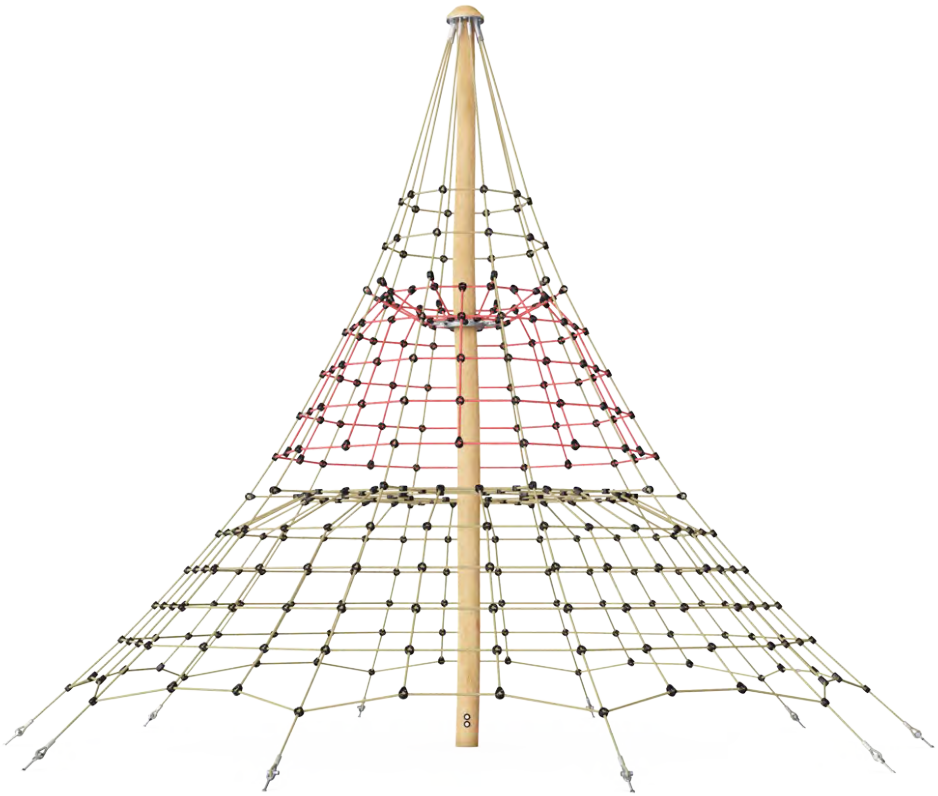

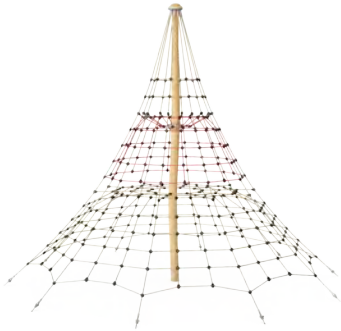

The Tree Climber is a major attraction that invites climbing. Everyone wants to climb to the top – or at least to the first horizontal net. The color coding of the net helps set new destinations, attracting children again and again. The inclined climbing in the net trains children's cross-coordination and muscles as they climb and crawl towards the top.

Furthermore, the sense of space is seriously trained when climbing the heights. The nice horizontal breaks make fine destinations and points for a break. The horizontal nets furthermore invite socializing, providing a spacious place to meet. The height of the net invites risk taking in a safe framework. When the children climb they constantly challenge their sense of space. This is especially important in judging distances, for instance, on crowded streets.

Data is subject to change without prior notice.

Tree Climber

NRO834-1001

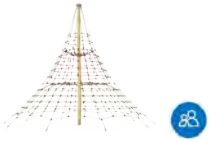

Transparency
Social-Emotional: the transparency makes cooperation and communication possible throughout, important life-skills for children to practice.

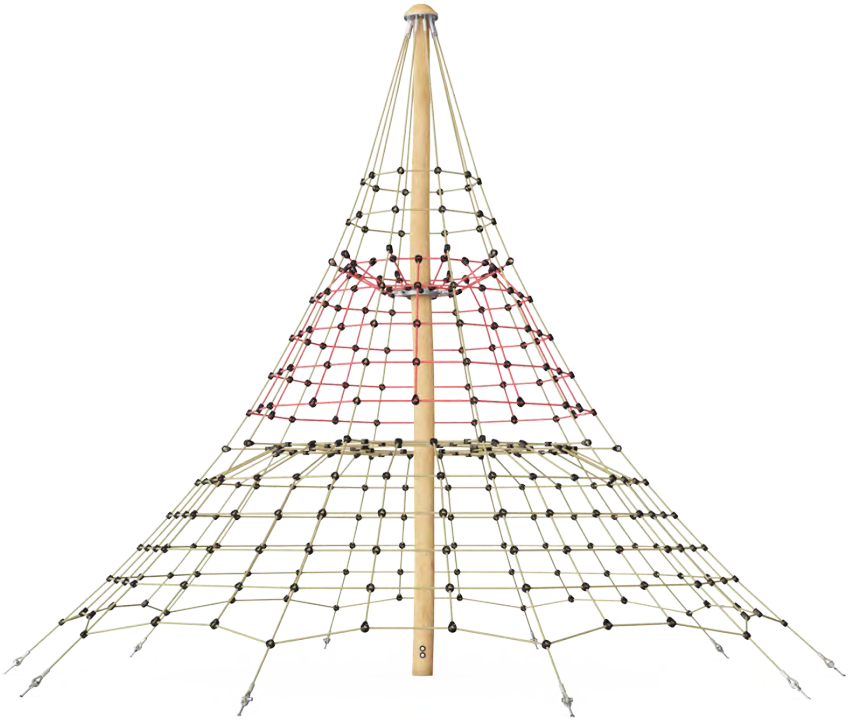

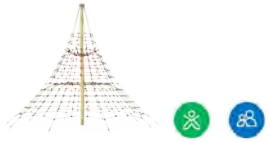

Large climbing net
Physical: the connected nets make climbers feel the movements of the other climbers, adding a dimension of fun and demanding concentration. All muscle groups are trained, as well as cross coordination. **Social-Emotional:** room for breaks for many and support cooperation and turn-taking skills.

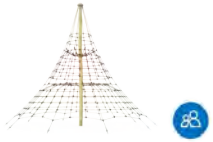

Height
Social-Emotional: children develop courage and self-regulation when being up high. This positively impacts self-confidence.

Data is subject to change without prior notice.

Tree Climber

NRO834-1001

All Organic Robinia products by KOMPAN are made of Robinia wood from sustainable European sources. On request it can be supplied as FSC® Certified (FSC® C004450).

Nets and ropes are made of UV-stabilized PA with inner steel cable reinforcement. The rope is induction treated in order to create a strong connection between steel and rope which leads to good wear resistance.

The Robinia wood can be supplied as untreated raw wood or painted with a brown colored transparent pigment that maintains the golden wood color of the wood.

Item no. NRO834-1001	
Installation Information	
Max. fall height	6'0"
Safety surfacing area	872ft²
Total installation time	13.1 hours
Excavation volume	10.28yd³
Concrete volume	7.19yd³
Footing depth (standard)	3'4"
Shipment weight	944lbs
Anchoring options	In-ground ✔
Warranty Information	
Robinia Wood	10 Years
Ropes & nets	10 Years
Spare Parts Availability	10 Years
Stainless steel components	Lifetime

Elevated activities **0**	Accessible elevated activities	Accessible ground level activities	Accessible ground level play types
Present	**0**	**1**	**1**
Required	**0**	**1**	**1**

Data is subject to change without prior notice.

Sustainability Data

NRO834-1001

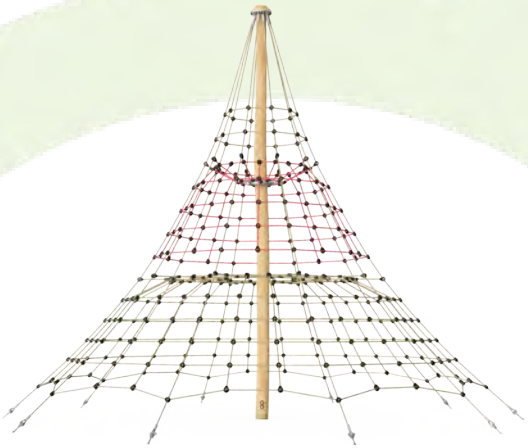

Cradle to Gate A1-A3	Total CO_2 emission	CO_2e/kg	Recycled materials
	kg CO_2e	kg CO_2e/kg	%
NRO834-1001	1,208.46	3.77	37.60

The overall framework applied for these factors is the Environmental Product Declaration (EPD), which quantifies "environmental information on the life cycle of a product and enable comparisons between products fulfilling the same function" (ISO, 2006). This follows the structure and applies a Life-Cycle Assessment approach to the entire Product stage from raw material through manufacturing (A1-A3))

Kompan A/S
C.F. Tietgens Boulevard 32C
DK-5220 Odense SØ
Denmark

Validation of CO_2 calculation method
BUREAU VERITAS
HSE Denmark A/S

Verification of CO_2 calculation of: Nature play

Data version no. 2023-10-05

The CO_2 calculation and data are in compliance with the principles of a carbon footprint impact according to the GHG protocol (Greenhouse Gas Protocol), Scope 3, cradle to gate related to all individual components in the product category: "Nature play" represented by item no.: NRO409-0621.

(Scope 3 emissions include emission sources in the upstream and downstream value chain).

Date: 30. October 2023 | Valid until: 30. October 2025
Verified by:

Julie Marie Vejsgaard Larsen, LCA & EPD Consultant

Verification based on report: Validation of CO_2 calculation of 9 categories of Kompan product line, version 1.0, prepared by: Bureau Veritas HSE, Denmark: Julie M. V. Larsen.

Publication date: 30. October 2023

By Bureau Veritas HSE
www.bureauveritas.dk
+45 7731 1000

Data is subject to change without prior notice.

Tree Climber

NRO834-1001

* Max fall height | ** Total height | *** Safety surfacing area	* Max fall height | ** Total height

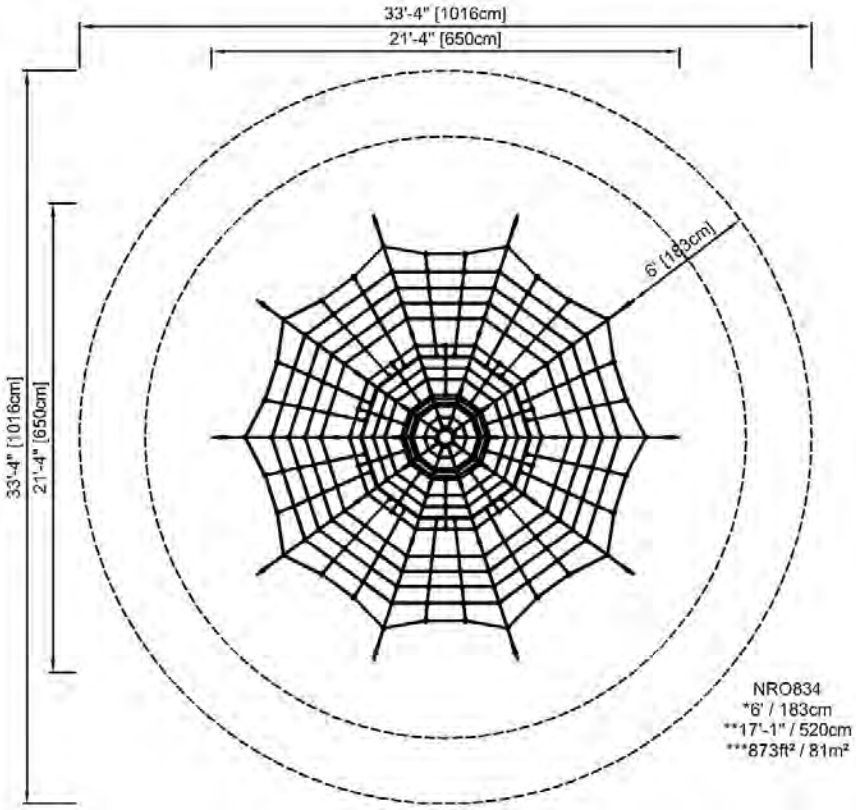

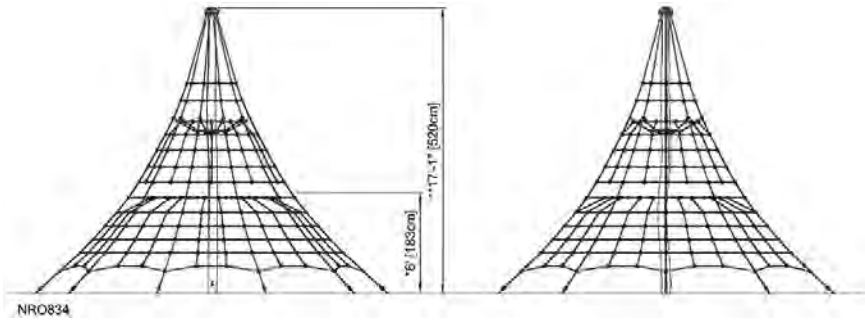

Click to see TOP VIEW	Click to see SIDE VIEW

Data is subject to change without prior notice.

KOMPAN®

NRO834-1001/FSC
NRO834-1011/FSC

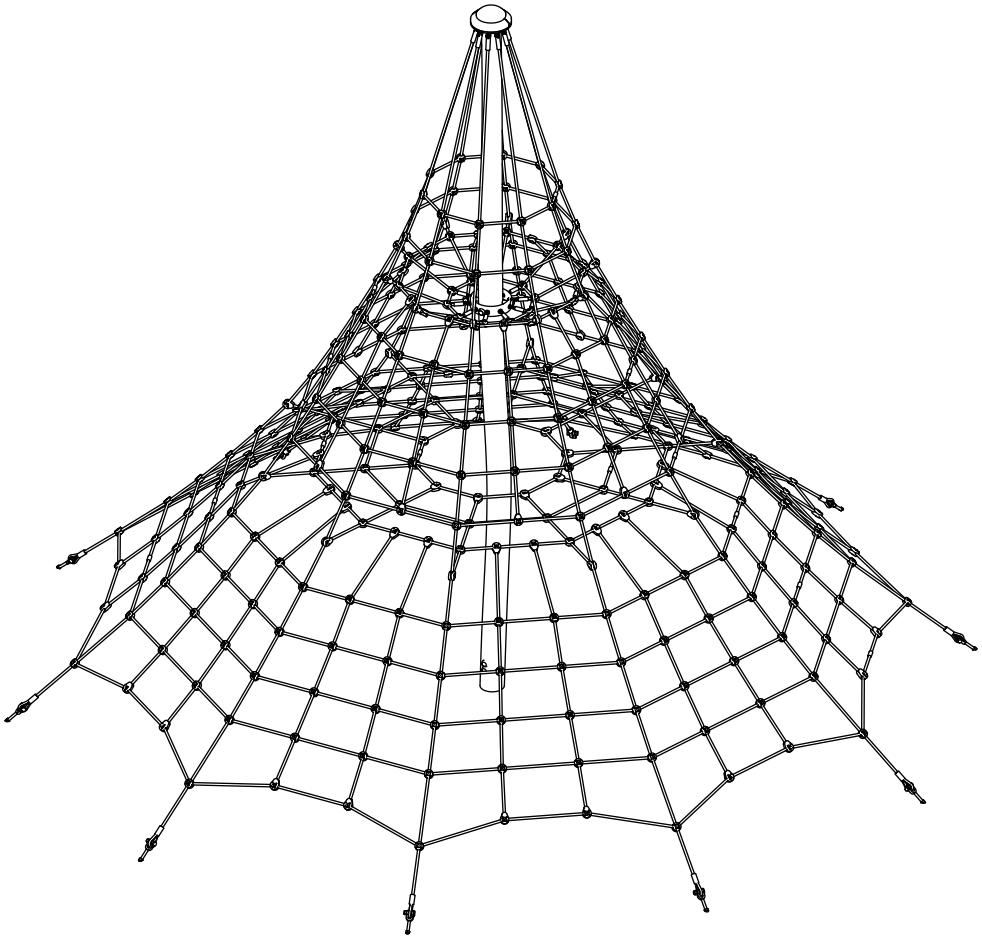

VNRO834 20170116 PetrJu

Copyright©KOMPAN A/S

Safety zone in accordance with EN 1176
Sicherheitsabstand gemäß EN 1176
Espace d'évolution selon EN 1176
Zona de seguridad según EN 1176
Distanze di sicurezza in conformità con lo standard EN 1176
Veiligheidsgebied in overeenstemming met EN 1176
Säkerhetsområde enl EN 1176
Sikkerhedsareal iht. EN 1176
Зона безопасности в соответствии с EN 1176
EN1176-normin mukainen turva-alue

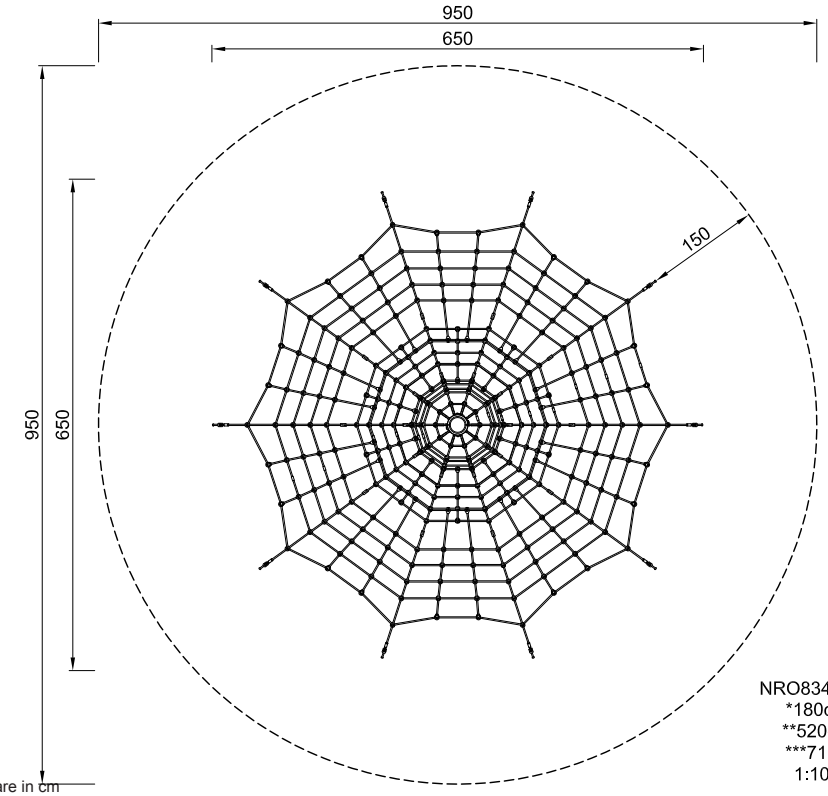

NRO834-xx01
*180cm
**520cm
***71m²
1:100

Free height of fall
Freie Fallhöhe
Hauteur de chute libre
Altura de caída libre
Altezza di caduta libera
Vrije valhoogte
Fri fallhöjd
Fri faldhøjde
Высота свободного падения
Vapaa putoamiskorkeus

All measurements are in cm
Alle Maßangaben in cm
Toutes les dimensions sont indiquées en cm
Todas las medidas están indicadas en cm
Tutte le misure sono in cm
Alle afmetingen zijn in cm
Alla mått är angivna i cm
Alle mål er angivet i cm
Все измерения в см.
Kaikki ohjeessa mainitut mitat ovat senttimetrejä.

Please note: The safety zone shown on this drawing is in accordance with EN 1176. There may be some locations where a larger safety zone is required. If in doubt, please contact your play consultant.

Achtung: Der angegebene Sicherheitsabstand entspricht EN 1176. Bestimmte Länder schreiben größere Sicherheitsabstände vor. Bitte wenden Sie sich in Zweifelsfällen an Ihren Berater.

Attention : l'espace d'évolution montré est conforme à EN 1176. Dans certains pays, un espace d'évolution plus grand peut être exigé. Prière de contacter notre conseiller en cas de doute.

Observe: La zona de seguridad demostrada en este dibujo cumple con EN 1176. En algunos sitios puede ser necesaria una zona de seguridadmás grande. En caso de tener alguna duda, por favor póngase en contacto con nuestro consultor.

Attenzione: la distanza di sicurezza specificata è conforme ai requisiti EN 1176. In alcuni paesi, le norme locali possono richiedere distanze di sicurezza maggiori. In caso di dubbi, contattare il nostro consulente.

N.B.: het getoonde veiligheidsgebied is in overeenstemming met EN 1176. In sommige landen kan een groter veiligheidsgebied vereist zijn. In geval van twijfel onze adviseur raadplegen.

Obs: Det markerade säkerhetsområdet följer EN 1176. I vissa länder kan det finnas krav på större säkerhetsområde. Kontakta vänligen vår konsulent om du är osäker.

Obs.: Det viste sikkerhedsareal er i overensstemmelse med EN 1176. I nogle lande kan der være krav om større sikkerhedsareal. Kontakt venligst vores konsulent ved tvivlsspørgsmål.

Внимание: Зона безопасности указана в соответствии с EN 1176. Возможны случаи, когда требуется увеличение зоны безопасности. В затруднительных случаях обращайтесь к Вашему консультанту.

Huom: Tämän piirustuksen turva-alue on EN1176-normin mukainen. Joissain sijoituspaikoissa saatetaan edellyttää suurempaa turva-aluetta. Jos olet epävarma, otathan yhteyttä KOMPANiin.

Copyright©KOMPAN A/S

VNRO834 20170116 PetrJu

Safety zone in accordance with EN 1176
Sicherheitsabstand gemäß EN 1176
Espace d'évolution selon EN 1176
Zona de seguridad según EN 1176
Distanze di sicurezza in conformità con lo standard EN 1176
Veiligheidsgebied in overeenstemming met EN 1176
Säkerhetsområde enl EN 1176
Sikkerhedsareal iht. EN 1176
Зона безопасности в соответствии с EN 1176
EN1176-normin mukainen turva-alue

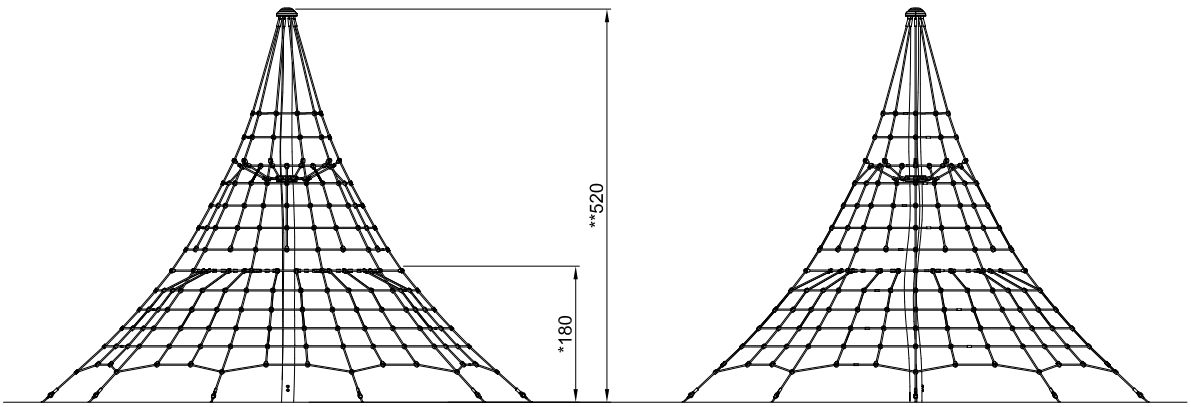

NRO834
1:100

* Free height of fall
Freie Fallhöhe
Hauteur de chute libre
Altura de caída libre
Altezza di caduta libera
Vrije valhoogte
Fri fallhöjd
Fri faldhøjde
Высота свободного падения
Vapaa putoamiskorkeus

All measurements are in cm
Alle Maßangaben in cm
Toutes les dimensions sont indiquées en cm
Todas las medidas están indicadas en cm
Tutte le misure sono in cm
Alle afmetingen zijn in cm
Alla mått är angivna i cm
Alle mål er angivet i cm
Все измерения в см.
Kaikki ohjeessa mainitut mitat ovat senttimetrejä.

Please note: The safety zone shown on this drawing is in accordance with EN 1176. There may be some locations where a larger safety zone is required. If in doubt, please contact your play consultant.

Achtung: Der angegebene Sicherheitsabstand entspricht EN 1176. Bestimmte Länder schreiben größere Sicherheitsabstände vor. Bitte wenden Sie sich in Zweifelsfällen an Ihren Berater.

Attention : l'espace d'évolution montré est conforme à EN 1176. Dans certains pays, un espace d'évolution plus grand peut être exigé. Prière de contacter notre conseiller en cas de doute.

Observe: La zona de seguridad demostrada en este dibujo cumple con EN 1176. En algunos sitios puede ser necesaria una zona de seguridadmás grande. En caso de tener alguna duda, por favor póngase en contacto con nuestro consultor.

Attenzione: la distanza di sicurezza specificata è conforme ai requisiti EN 1176. In alcuni paesi, le norme locali possono richiedere distanze di sicurezza maggiori. In caso di dubbi, contattare il nostro consulente.

N.B.: het getoonde veiligheidsgebied is in overeenstemming met EN 1176. In sommige landen kan een groter veiligheidsgebied vereist zijn. In geval van twijfel onze adviseur raadplegen.

Obs: Det markerade säkerhetsområdet följer EN 1176. I vissa länder kan det finnas krav på större säkerhetsområde. Kontakta vänligen vår konsulent om du är osäker.

Obs.: Det viste sikkerhedsareal er i overensstemmelse med EN 1176. I nogle lande kan der være krav om større sikkerhedsareal. Kontakt venligst vores konsulent ved tvivlsspørgsmål.

Внимание: Зона безопасности указана в соответствии с EN 1176. Возможны случаи, когда требуется увеличение зоны безопасности. В затруднительных случаях обращайтесь к Вашему консультанту.

Huom: Tämän piirustuksen turva-alue on EN1176-normin mukainen. Joissain sijoituspaikoissa saatetaan edellyttää suurempaa turva-aluetta. Jos olet epävarma, otathan yhteyttä KOMPANiin.

Copyright©KOMPAN A/S

VNRO834 20170116 PetrJu

Safety zone in accordance with ASTM 1487
Sicherheitsabstand gemäß ASTM 1487
Espace d'évolution selon ASTM 1487
Zona de seguridad según ASTM 1487
Distanze di sicurezza in conformità con lo standard ASTM 1487
Veiligheidsgebied in overeenstemming met ASTM 1487
Säkerhetsområde enl ASTM 1487
Sikkerhedsareal iht. ASTM 1487
Зона безопасности в соответствии с ASTM 1487
ASTM 1487-normin mukainen turva-alue

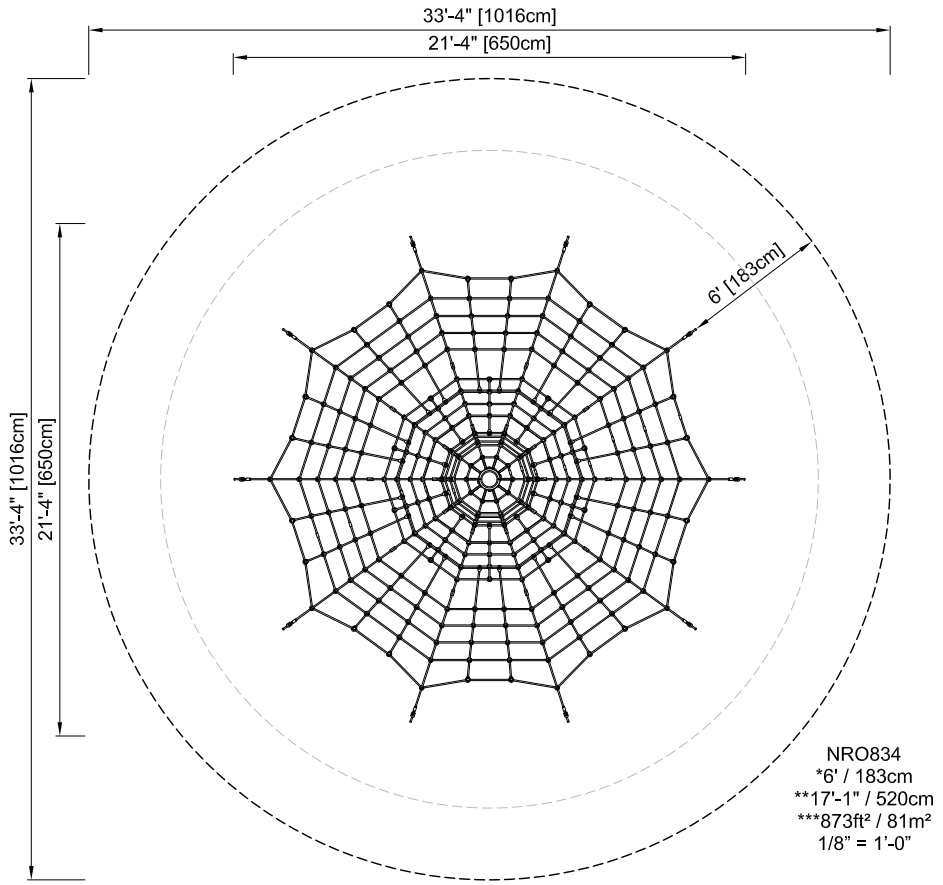

* Free height of fall
Freie Fallhöhe
Hauteur de chute libre
Altura de caída libre
Altezza di caduta libera
Vrije valhoogte
Fri fallhöjd
Fri faldhøjde
Высота свободного падения
Vapaa putoamiskorkeus

Please note: The safety zone shown on this drawing is in accordance with ASTM 1487. There may be some locations where a larger safety zone is required. If in doubt, please contact your play consultant.

Achtung: Der angegebene Sicherheitsabstand entspricht ASTM 1487. Bestimmte Länder schreiben größere Sicherheitsabstände vor. Bitte wenden Sie sich in Zweifelsfällen an Ihren Berater.

Attention : l'espace d'évolution montré est conforme à ASTM 1487. Dans certains pays, un espace d'évolution plus grand peut être exigé. Prière de contacter notre conseiller en cas de doute.

Observe: La zona de seguridad demostrada en este dibujo cumple con ASTM 1487. En algunos sitios puede ser necesaria una zona de seguridad más grande. En caso de tener alguna duda, por favor póngase en contacto con nuestro consultor.

Attenzione: la distanza di sicurezza specificata è conforme ai requisiti ASTM 1487. In alcuni paesi, le norme locali possono richiedere distanze di sicurezza maggiori. In caso di dubbi, contattare il nostro consulente.

N.B.: het getoonde veiligheidsgebied is in overeenstemming met ASTM 1487. In sommige landen kan een groter veiligheidsgebied vereist zijn. In geval van twijfel onze adviseur raadplegen.

Obs: Det markerade säkerhetsområdet följer ASTM 1487. I vissa länder kan det finnas krav på större säkerhetsområde. Kontakta vänligen vår konsulent om du är osäker.

Obs.: Det viste sikkerhedsareal er i overensstemmelse med ASTM 1487. I nogle lande kan der være krav om større sikkerhedsareal. Kontakt venligst vores konsulent ved tvivlsspørgsmål.

Внимание: Зона безопасности указана в соответствии с ASTM 1487. Возможны случаи, когда требуется увеличение зоны безопасности. В затруднительных случаях обращайтесь к Вашему консультанту.

Huom: Tämän piirustuksen turva-alue on ASTM 1487-normin mukainen. Joissain sijoituspaikoissa saatetaan edellyttää suurempaa turva-aluetta. Jos olet epävarma, otathan yhteyttä KOMPANiin.

Copyright©KOMPAN A/S

VNRO834 20170116 PetrJu

Safety zone in accordance with ASTM 1487
Sicherheitsabstand gemäß ASTM 1487
Espace d'évolution selon ASTM 1487
Zona de seguridad según ASTM 1487
Distanze di sicurezza in conformità con lo standard ASTM 1487
Veiligheidsgebied in overeenstemming met ASTM 1487
Säkerhetsområde enl ASTM 1487
Sikkerhedsareal iht. ASTM 1487
Зона безопасности в соответствии с ASTM 1487
ASTM 1487-normin mukainen turva-alue

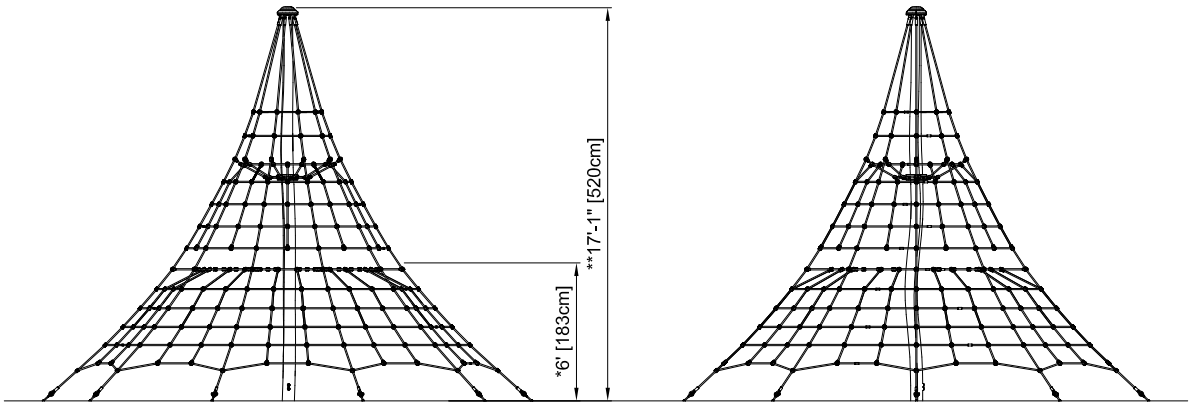

NRO834
1:100

* Free height of fall
Freie Fallhöhe
Hauteur de chute libre
Altura de caída libre
Altezza di caduta libera
Vrije valhoogte
Fri fallhöjd
Fri faldhøjde
Высота свободного падения
Vapaa putoamiskorkeus

Please note: The safety zone shown on this drawing is in accordance with ASTM 1487. There may be some locations where a larger safety zone is required. If in doubt, please contact your play consultant.

Achtung: Der angegebene Sicherheitsabstand entspricht ASTM 1487. Bestimmte Länder schreiben größere Sicherheitsabstände vor. Bitte wenden Sie sich in Zweifelsfällen an Ihren Berater.

Attention : l'espace d'évolution montré est conforme à ASTM 1487. Dans certains pays, un espace d'évolution plus grand peut être exigé. Prière de contacter notre conseiller en cas de doute.

Observe: La zona de seguridad demostrada en este dibujo cumple con ASTM 1487. En algunos sitios puede ser necesaria una zona de seguridad más grande. En caso de tener alguna duda, por favor póngase en contacto con nuestro consultor.

Attenzione: la distanza di sicurezza specificata è conforme ai requisiti ASTM 1487. In alcuni paesi, le norme locali possono richiedere distanze di sicurezza maggiori. In caso di dubbi, contattare il nostro consulente.

N.B.: het getoonde veiligheidsgebied is in overeenstemming met ASTM 1487. In sommige landen kan een groter veiligheidsgebied vereist zijn. In geval van twijfel onze adviseur raadplegen.

Obs: Det markerade säkerhetsområdet följer ASTM 1487. I vissa länder kan det finnas krav på större säkerhetsområde. Kontakta vänligen vår konsulent om du är osäker.

Obs.: Det viste sikkerhedsareal er i overensstemmelse med ASTM 1487. I nogle lande kan der være krav om større sikkerhedsareal. Kontakt venligst vores konsulent ved tvivlsspørgsmål.

Внимание: Зона безопасности указана в соответствии с ASTM 1487. Возможны случаи, когда требуется увеличение зоны безопасности. В затруднительных случаях обращайтесь к Вашему консультанту.

Huom: Tämän piirustuksen turva-alue on ASTM 1487-normin mukainen. Joissain sijoituspaikoissa saatetaan edellyttää suurempaa turva-aluetta. Jos olet epävarma, otathan yhteyttä KOMPANiin.

Copyright©KOMPAN A/S

VNRO834 20170116 PetrJu

EN

The foundations must be constructed by the client on site and are not included in the delivery.
The concrete for the foundations must be of class C25/30, fck = 30 N/mm².
The fresh concrete must have a flowing consistenc .
After pouring, the concrete must be compacted by means of vibration, tamping, knocking or rodding.
The specified curing periods must be observed.
The dimensions must be adhered to precisely, with a maximum deviation of ± 2 cm.
The dimensions specified for the anchor blocks, posts and mast foundation are only valid if the structure is to be set on undisturbed soil of average bearing strength. For filled ground or lower bearing strengths
- the height of the anchor blocks must be increased to 100 cm ,
- the post and mast foundations must be enlarged to measure 100 x 100 cm in plan.

DE

Die Fundamente sind bauseits zu erstellen und gehören nicht zum Lieferumfang.
Der Beton für die Fundamente muss der Güteklassse C25/30, fck = 30 N/mm² entsprechen. Die Konsistenz des Frischbetons muss eine fließend sein
Beim Einbau ist der Beton durch Rütteln, Stampfen, Klopfen oder Stochern zu verdichten.
Die vorgeschriebenen Abbindezeiten sind zu beachten.
Die Maße müssen genau eingehalten werden. Die Abweichung darf maximal ± 2 cm betragen.
Die angegebenen Abmessungen für Ankerblöcke, Pfosten- und Mastfundamente gelten nur für gewachsenen, durchschnittlich tragfähigen Boden. Bei Aufschüttungen und weniger tragfähigem Boden müssen
- die Ankerblöcke auf 100 cm Tiefe vergrößert werden,
- die Pfosten- und Mastfundamente im Grundriss auf 100 x 100 cm vergrößert werden.

FR

Les fondations sont à la charge du client et ne sont pas incluses lors de la livraison. Le béton des fondations doit être un béton de type C25/30, fck=30 N/mm². La consistance du béton doit être fluide. Lors du montage, le béton doit être compacté par vibration, damage, pilonnage ou vibrage interne.
Veiller à respecter le temps minimum de prise du béton.
Respecter avec précision les cotes indiquées, différence maximale ± 2 cm.
Les cotes indiquées pour les blocs d'ancrage, les poteaux et les fondations des mâts ne sont valables que pour un sol naturel à portance moyenne.
En cas de remblais et de sols de moindre portance:
- la profondeur des blocs d'ancrage doit être portée à 100 cm,
- la taille des fondations des poteaux et des mâts doit être portée à 100 x 100 cm.

ES

Las cimentaciones serán ejecutadas a cargo del propietario y no forman parte del suministro.
El hormigón utilizado para las cimentaciones debe ser producido de acuerdo con la clase de resistencia C25/30, fck = 30 N/mm2. La consistencia del hormigón debe ser fluida. Al instalarlo, el hormigón debe ser compactado haciéndolo vibrar, apisonándolo, sacudiéndolo o removiéndolo.
Se deben respetar los tiempos de fraguado prescritos.
Las medidas deben ser respetadas con exactitud, divergencia máxima ± 2 cm.
Las medidas indicadas para los bloques de anclaje, para las cimentaciones de los postes y del mástil solamente son válidas para suelos competentes y normalmente resistentes. En caso de rellenos y en caso de suelos menos resistentes
- los bloques de anclaje deben ser agrandados a 100 cm de profundidad,
- las cimentaciones de los postes y del mástil deben ser ampliados hasta medir 100 x 100 cm en relación a la planta.

IT

I blocchi di fondazione devono essere realizzati dal committente e non fanno parte della fornitura.
Il calcestruzzo per i blocchi di fondazione deve essere realizzato conformemente alla classe di resistenza C25/30, fck=30 N/mm². La consistenza del calcestruzzo deve essere fluida. Per la messa in opera, i calcestruzzo deve essere compattato tramite vibrazione, colpi, costipamento.
Rispettare i tempi di maturazione prescritti.
Rispettare rigorosamente le dimensioni; tolleranza max ± 2cm.
Le dimensioni indicate per i blocchi di ancoraggio, pali e fondazioni del montante valgono solamente per terreno naturale di resistenza media. In caso di terra da riporto e terreni poco resistenti
- i blocchi di ancoraggio devono essere portati a 100 cm di profondità;
- i blocchi di fondazione dei pali e del montante devono essere portati a 100 x 100 cm di dimensione in pianta.

NL

De fundamenten moeten bij het opbouwen worden aangelegd en behoren niet tot de levering.
Het beton voor de fundamenten moet overeenkomstig vastheidsklasse C25/30, fck=30N/mm2 worden geproduceerd. De betonconsistentie moet vloeiend zijn. De betonnen fundamenten door trillen, stampen, kloppen of porren verdichten.
Met de voorgeschreven verhardingstijden rekening houden.
Nauwkeurig aan de afmetingen houden, maximale afwijking ± 2 cm.
De voorgeschreven afmetingen voor ankerblokken, palen en mastfundamenten gelden alleen voor een gegroeide, normaal draagkrachtige grond. Bij aangevulde grond en gering draagkrachtige grond moeten
- de ankerblokken tot een diepte van 100 cm worden vergroot,
- de paal- en mastfundamenten tot 100 x 100 cm in horizontale projectie worden vergroot.

SV

Fundamenten skall göras av kunden och omfattas inte av leveransen.
Betongen för fundamenten skall tillverkas enligt hållfasthetsklass C25/30, fck = 30 N/mm². Betongens konsistens skall vara flytande
Vibrera eller stampa betongen för att bli av med luftbubblor och komprimera den.
De föreskrivna härdningstiderna måste observeras.
Måtten måste observeras exakt, max avvikelse 2cm.
De uppgivna måtten för förankringsblock, stolpar och mastfundament gäller endast naturlig mark med genomsnittlig bärförmåga. Vid utfylld mark och mark med låg bärförmåga måste
- förankringsblockens djup ökas till 100 cm,
- stolp- och mastfundamenten ökas till 100 x 100 cm i plan.

DK

Fundamenterne skal udføres af kunden og er ikke en del af leverancen.
Fundamentet skal udføres af beton med styrkeklasse C25/30 fck=30 N/mm².
Betonens konsistens skal være flydende. Efter udstøbning vibreres elle stampes betonen for at fjerne luft ansamlinger og komprimere den.
De foreskrevne hærde tider skal overholdes før yderligere montage og ibrugtagning.
De angivne målsætninger må ikke afvige med mere end +/-2cm og gælder kun for ikke anlagte jordbundsforhold.
Ved opgravede eller tilbagefyldte jordforhold samt jordbund med ringe bæreevne øges ankerblokkenes dybde til 100cm og mastefundamentets udstrækning øges til 100 x 100cm.

VNRO834 20170116 PetrJu

Copyright©KOMPAN A/S

RU

Фундаменты закладываются со стороны заказчика и не входят в комплект поставки.
Бетон для закладки фундаментов должен соответствовать классу прочности С 25/30, при нормативном сопротивлении fck = 30 Н/мм². По консистенции бетон должен быть текучим.
При укладке бетон уплотняется путем вибрации, трамбования, обстукивания или шурования.
Учитывать предусмотренные сроки схватывания бетона.
Точно соблюдать указанные размеры, максимальная погрешность составляет ± 2 см.
Монтажные размеры, указанные в отношении анкерных блоков, стоек и фундаментов мачты, рассчитаны на прочный грунт, выдерживающий среднюю нагрузку. При наличии насыпного и слабонесущего грунта:
- увеличить глубину расположения анкерных блоков до 100 см;
- увеличить размеры фундаментов стоек и мачты до 100 x 100 см в горизонтальном разрезе.

FI

Asiakas tekee torniverkon asennuspaikalle perustukset. Perustukset eivät kuulu toimitussisältöön.
Perustusten betonin on oltava lujuusluokkaa C25/30, fck = 30 N/mm2.
Tuoreen betoniseoksen on oltava notkeaa.
Perustuksiin kaadettu betoni on tiivistettävä (sauva)täryttämällä, junttaamalla tai iskemällä.
Betonin kovettumisaikaa on noudatettava.
Annettuja mittoja on noudatettava tarkasti. Mittojen sallittu poikkeama on ± 2 cm.
Ankkurointipalkkien, kiinnitysosien ja tornin perusteiden mitat pätevät vain, kun torniverkko asennetaan tukevalle, koskemattomalle maalle, jonka kantokyky on hyvä. Täyttömaa tai kantokyvyltään heikompi maa:
- ankkurointipalkkien on oltava 100 cm korkeampia
- kiinnitysosien ja tornin perustuksia on suurennettava vastaamaan 100 x 100cm piirustuksessa.

mm/ft in

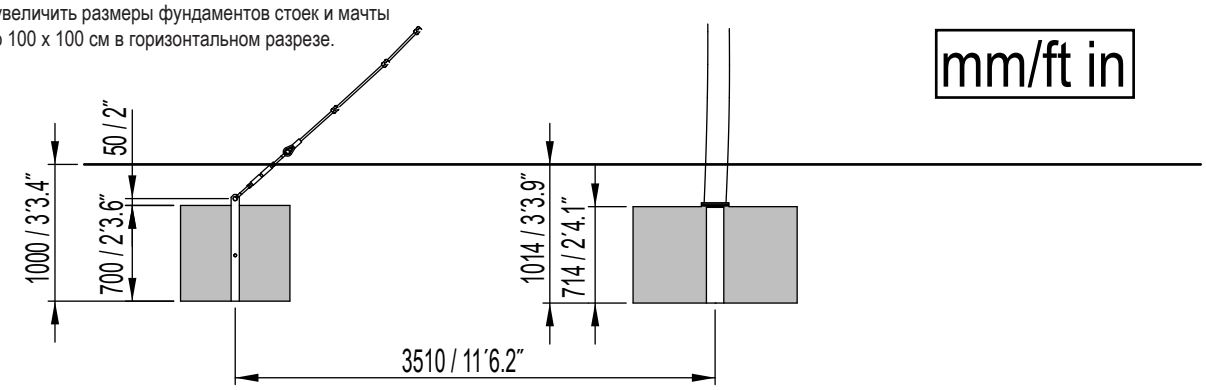

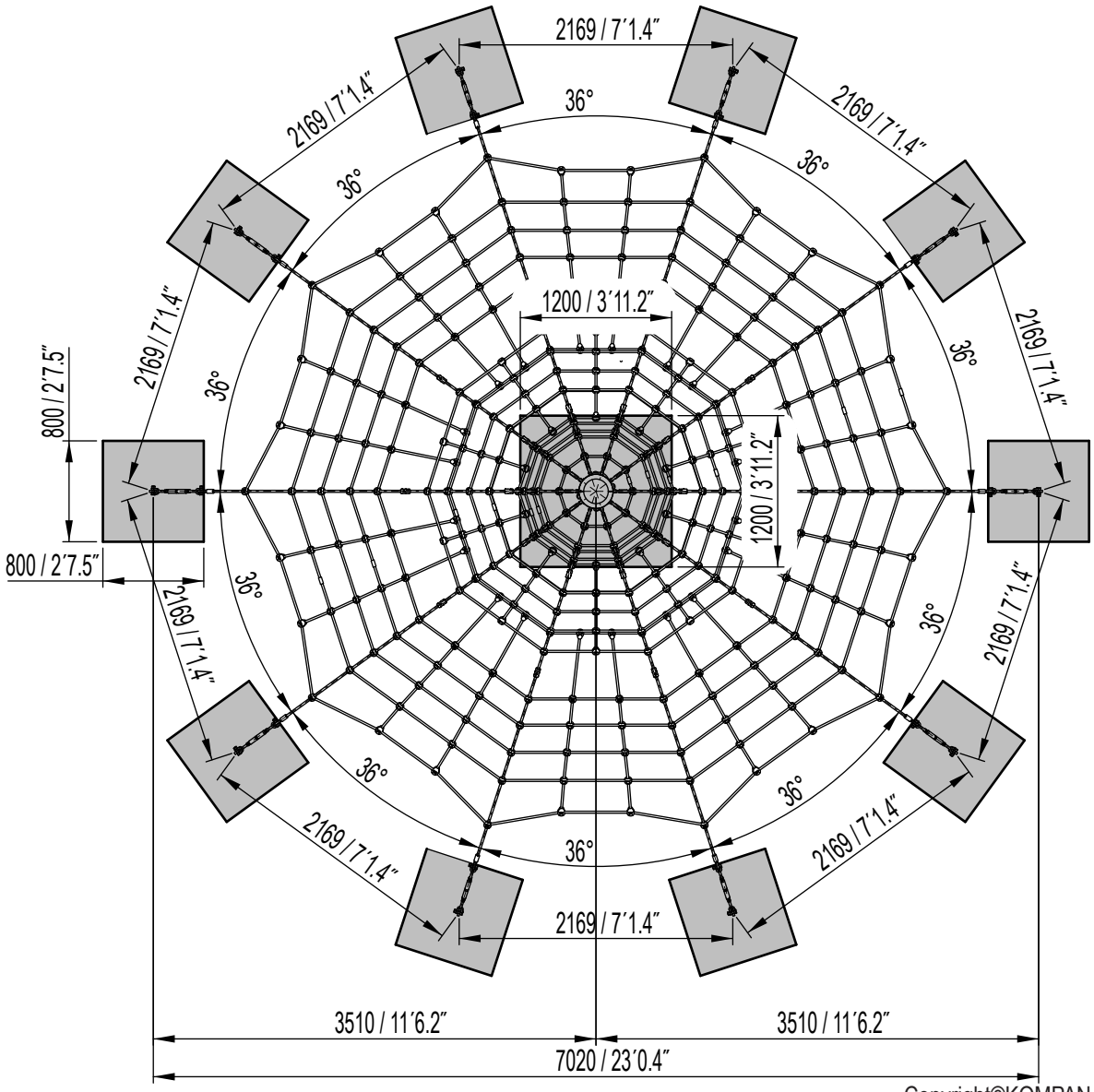

Copyright©KOMPAN A/S

VNRO834 20170116 PetrJu

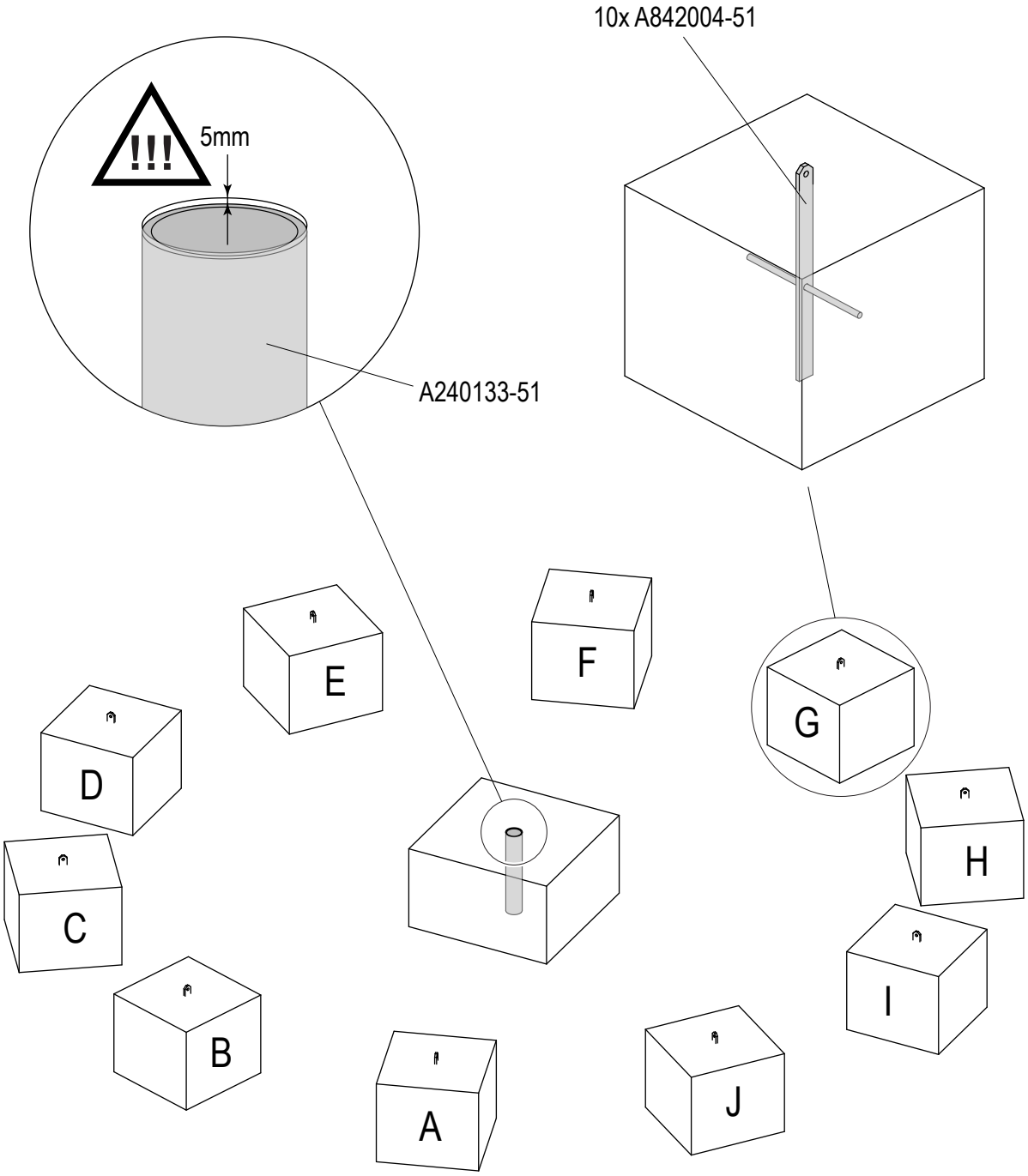

VNRO834 20170116 PetrJu

Copyright©KOMPAN A/S

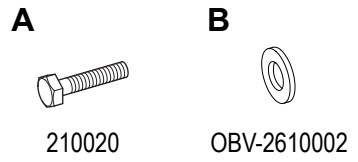

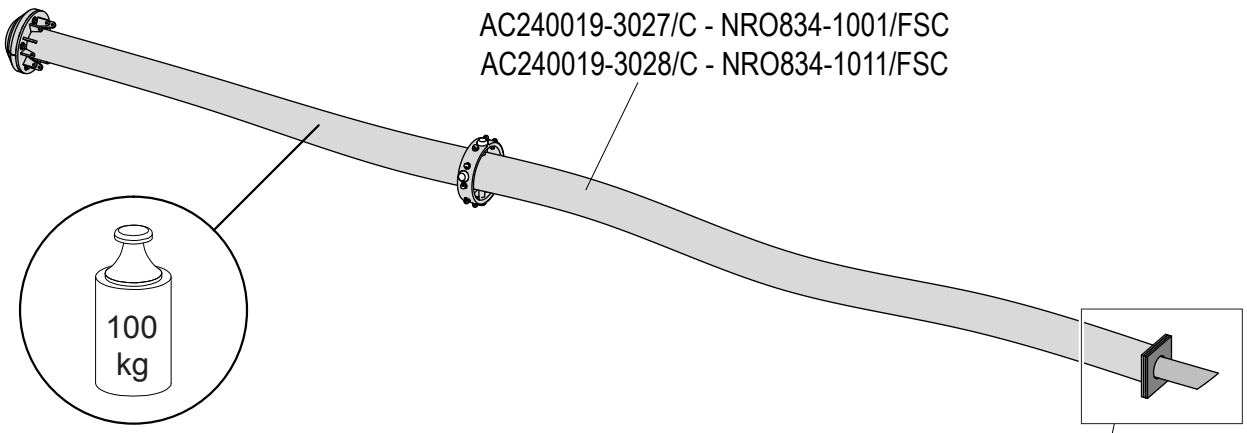

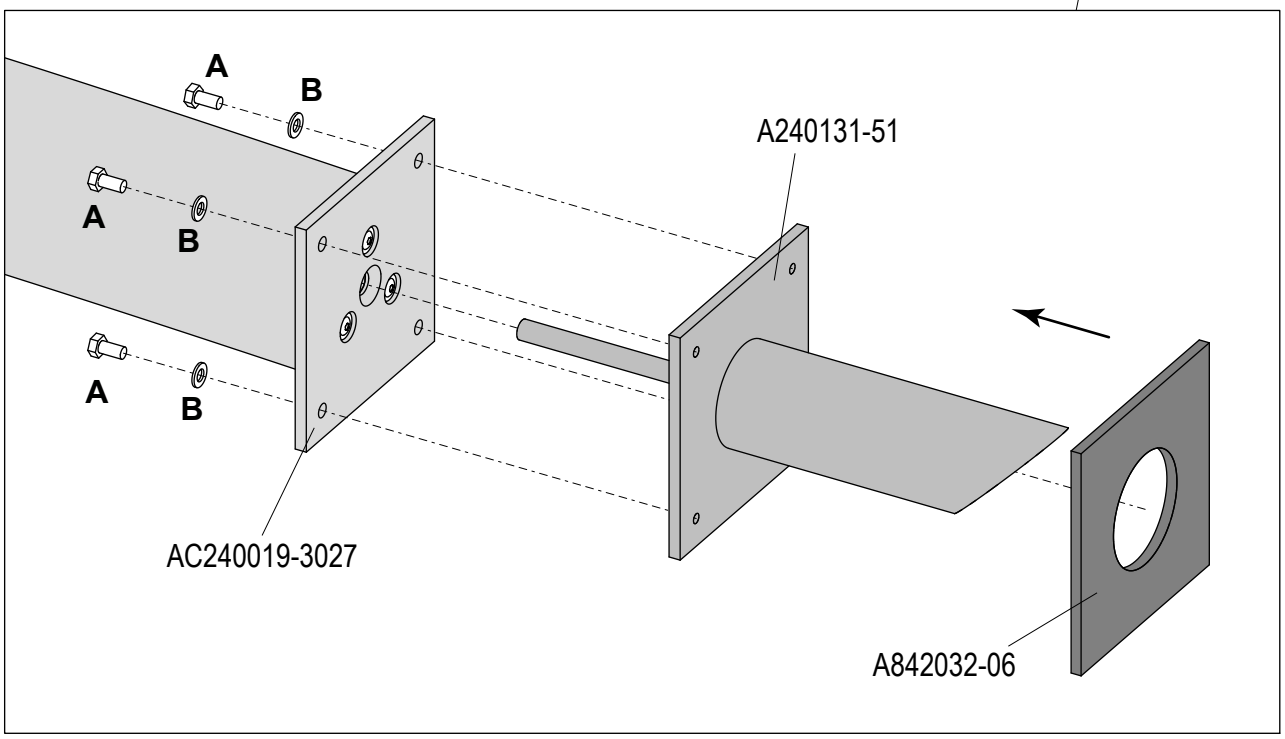

VNRO834 20170116 PetrJu

Copyright©KOMPAN A/S

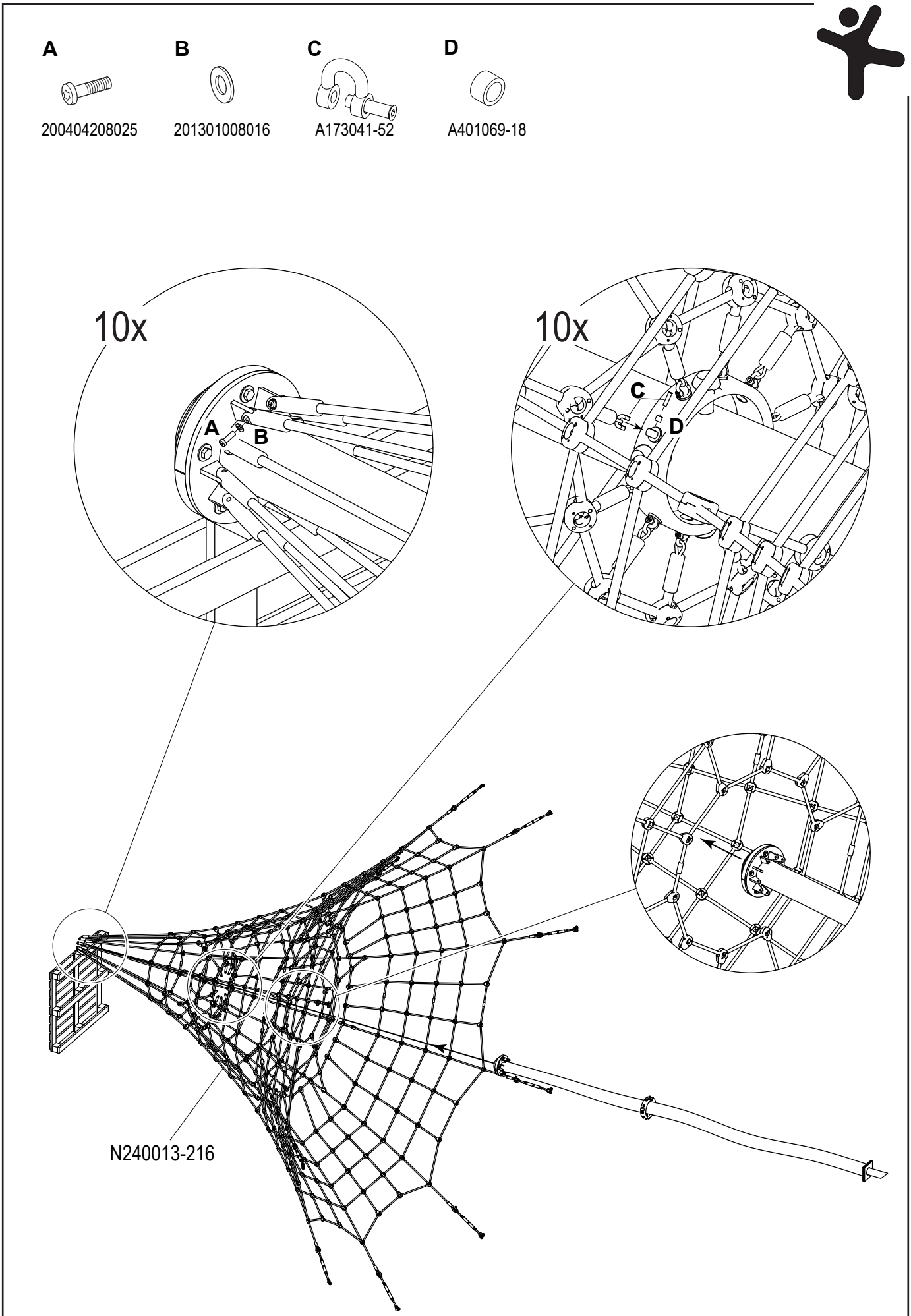

VNRO834 20170116 PetrJu

Copyright©KOMPAN A/S

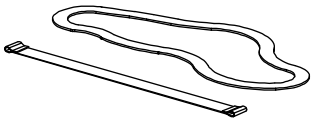

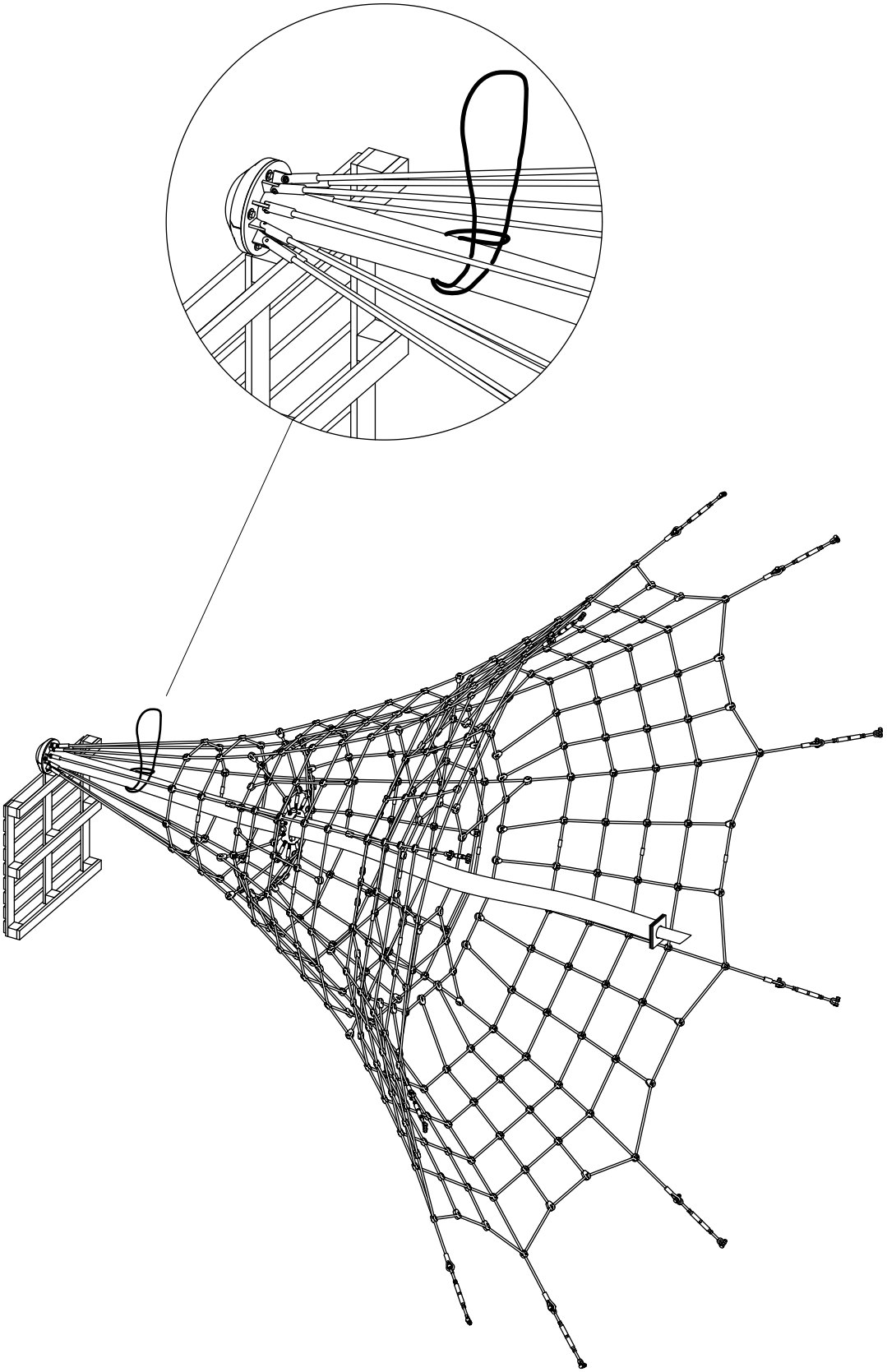

VNRO834 20170116 PetrJu

Copyright©KOMPAN A/S

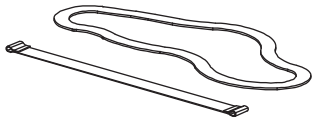

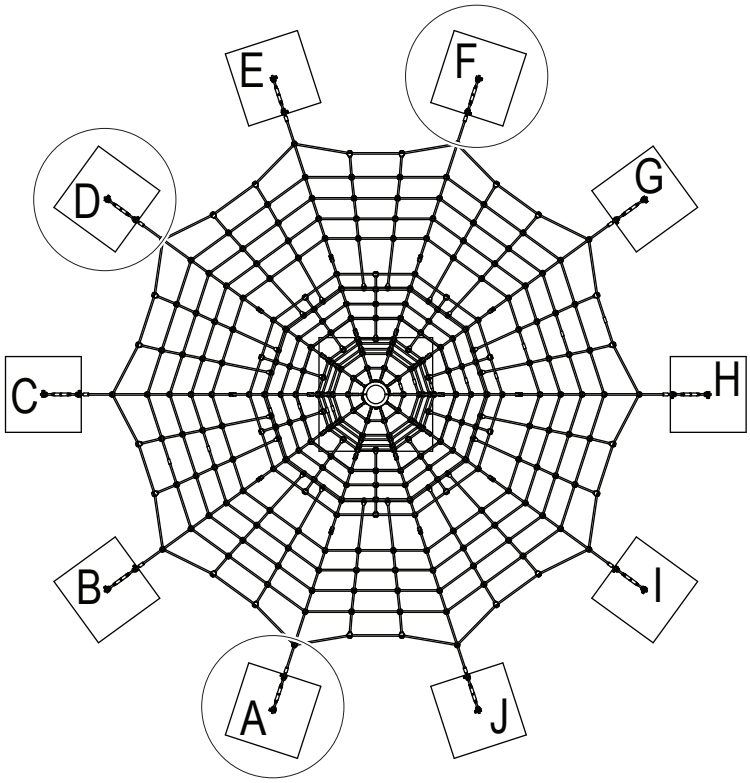

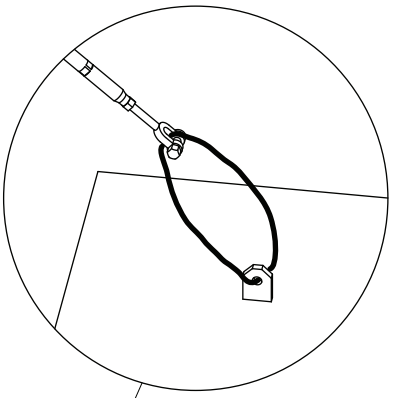

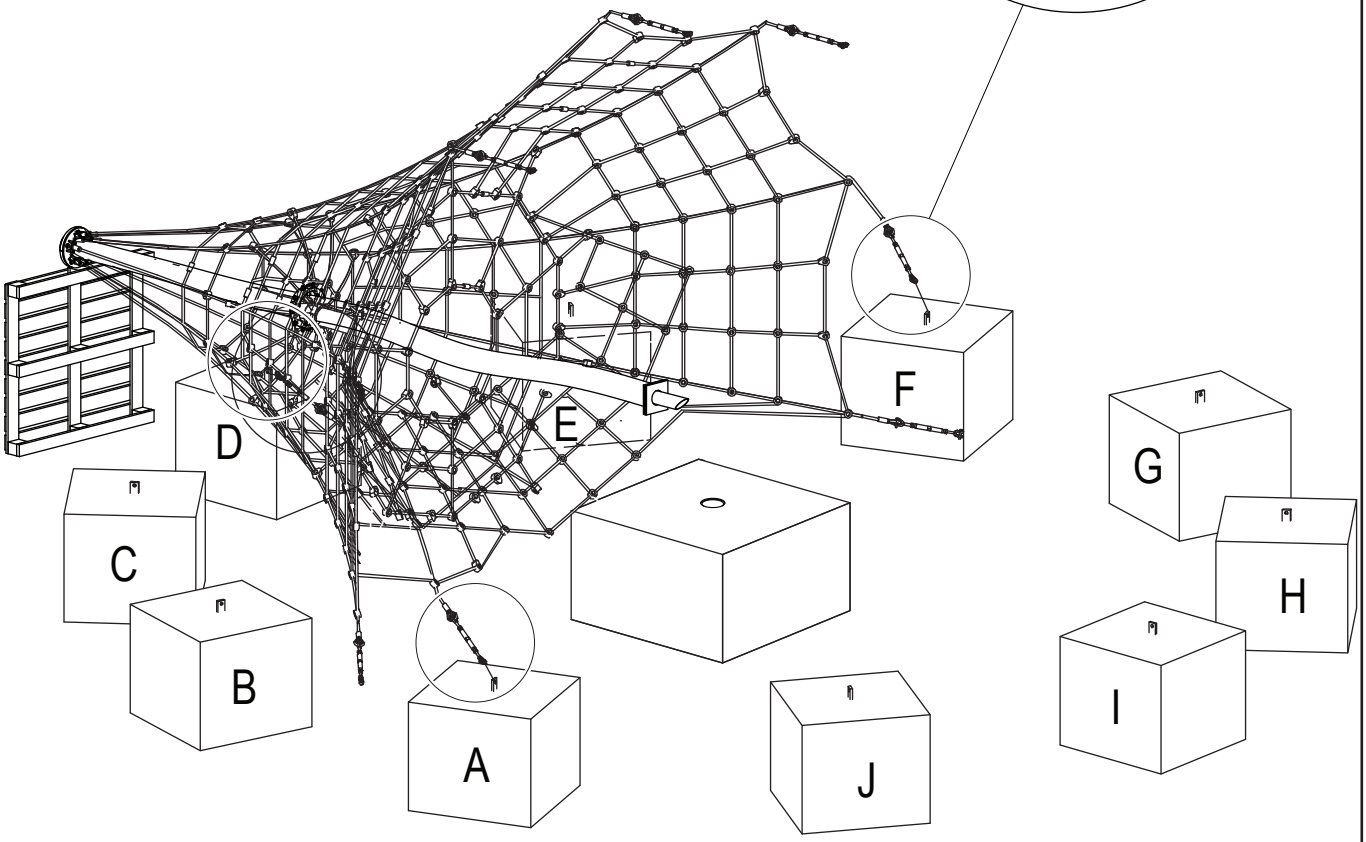

VNRO834 20170116 PetrJu

Copyright©KOMPAN A/S

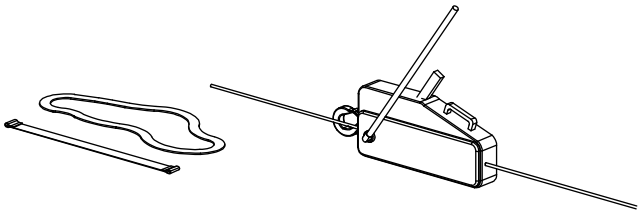

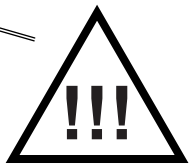

Remove from the danger area!
Aus dem Gefahrenbereich entfernen!
Eloigner de la zone à risques !
¡Retire se de la zona peligrosa!
Rimuovere dalla zona di pericolo!
Haal ze uit de gevarenzone!
Ta bort från området!
Fjern fra området!
Удалить всех из опасной зоны!
Poistu vaara-alueelta!

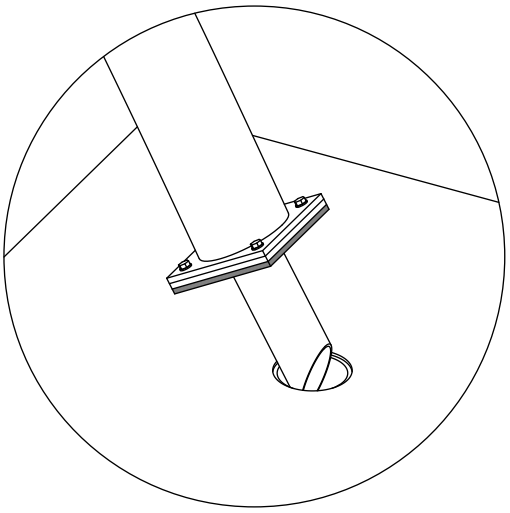

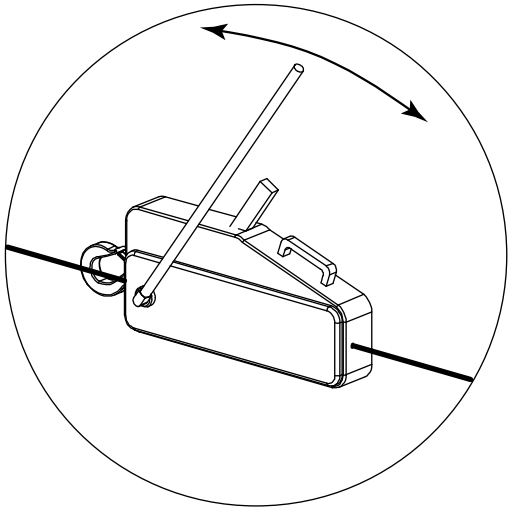

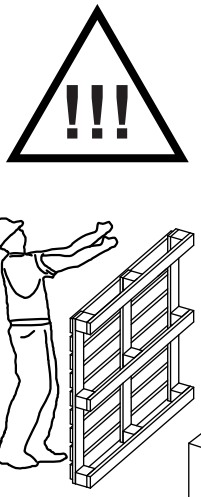

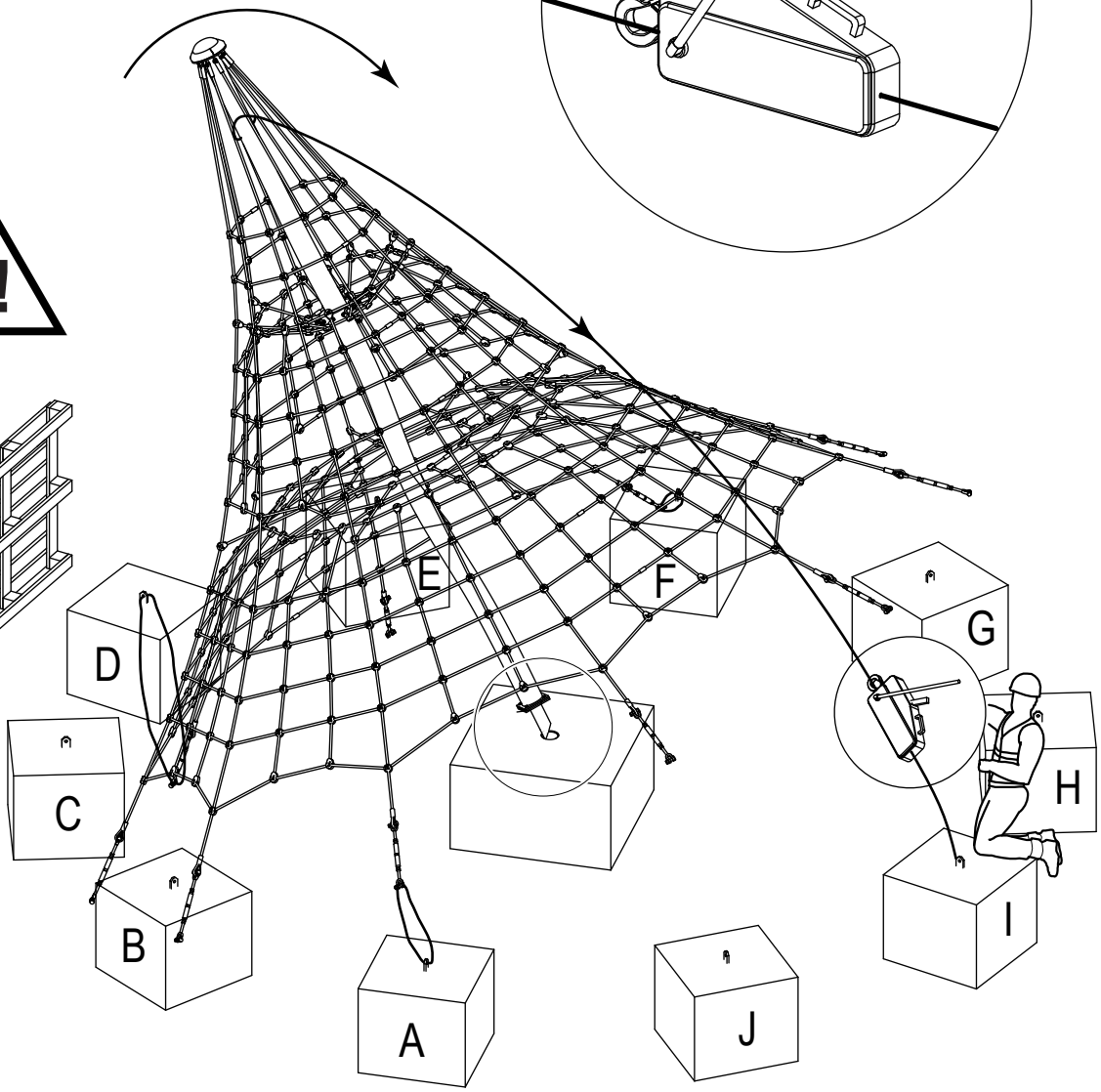

VNRO834 20170116 PetrJu

Copyright©KOMPAN A/S

1)

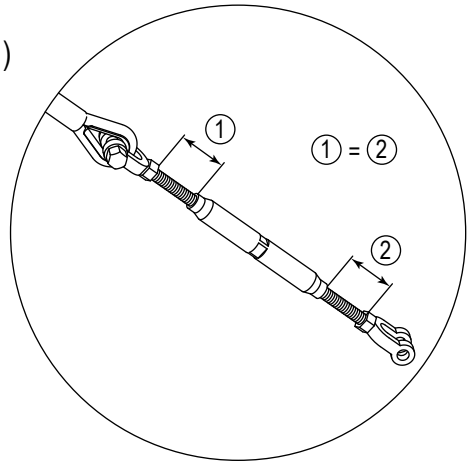

2)

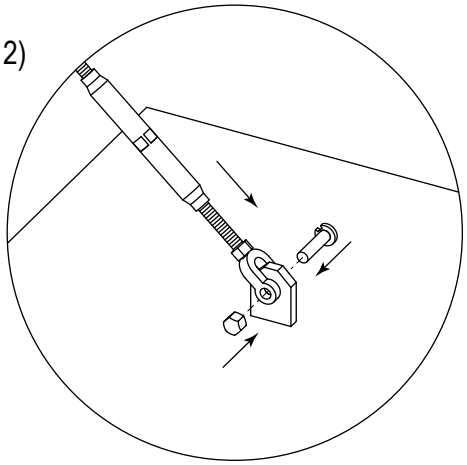

3)

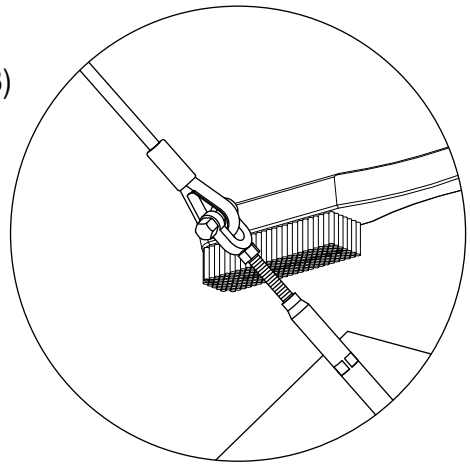

4)

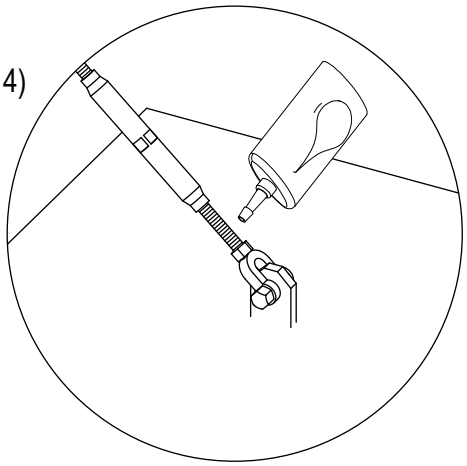

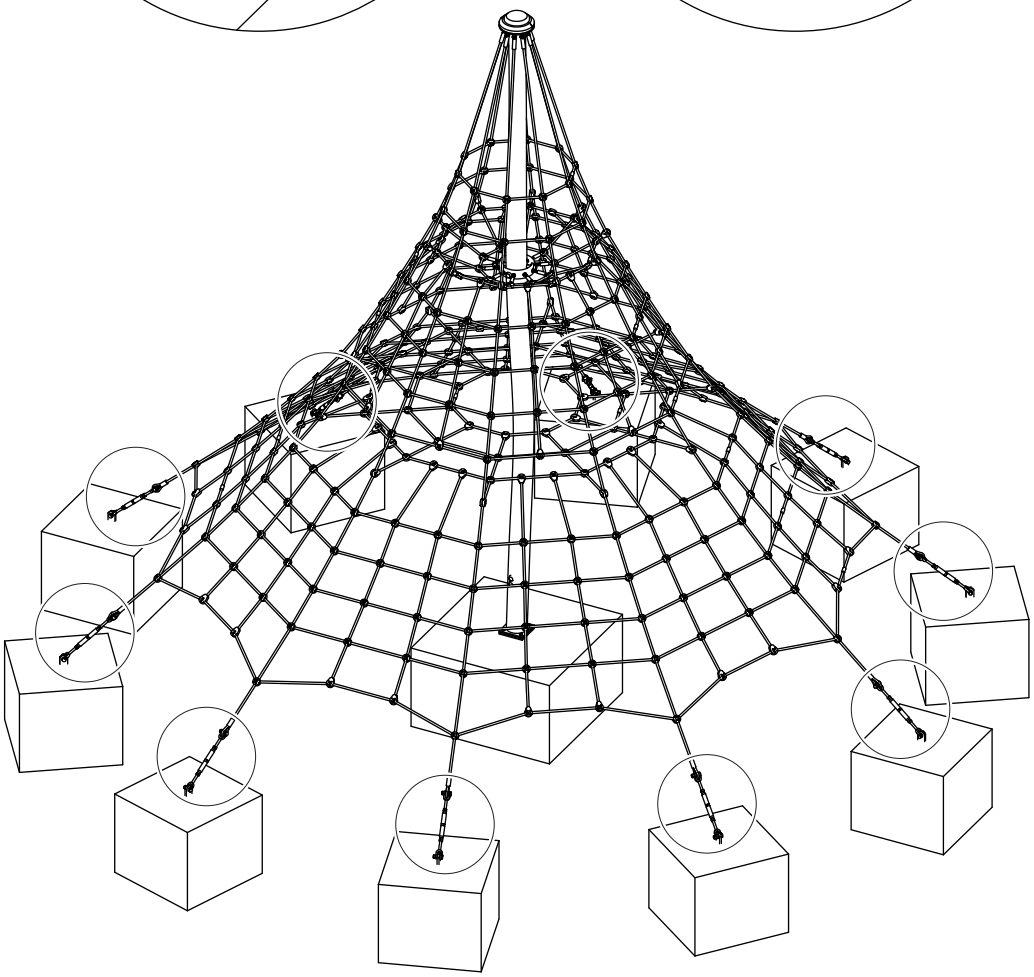

VNRO834 20170116 PetrJu

Copyright©KOMPAN A/S

5)

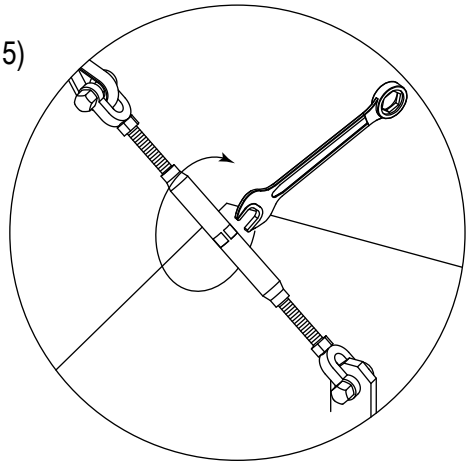

6)

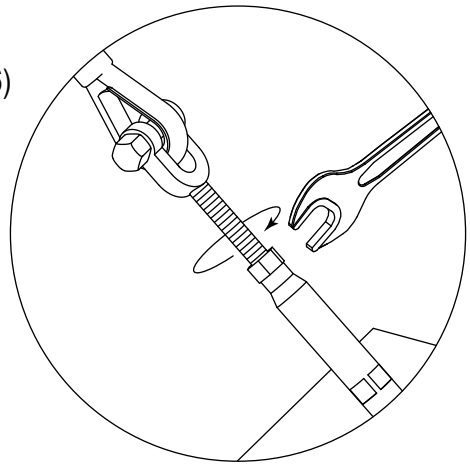

7)

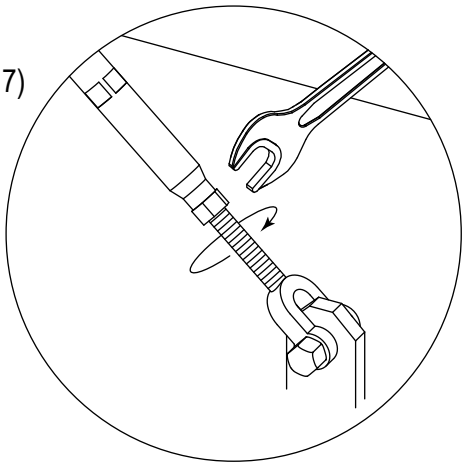

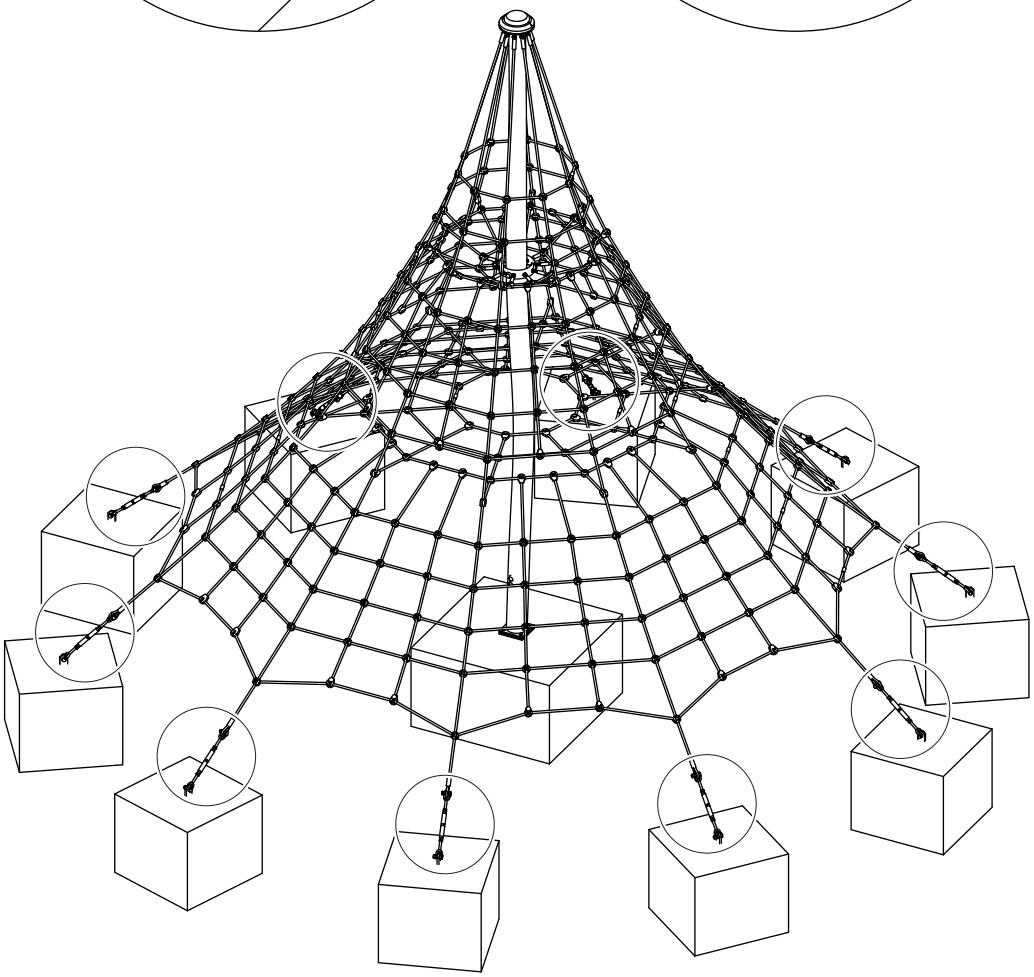

VNRO834 20170116 PetrJu

Copyright©KOMPAN A/S

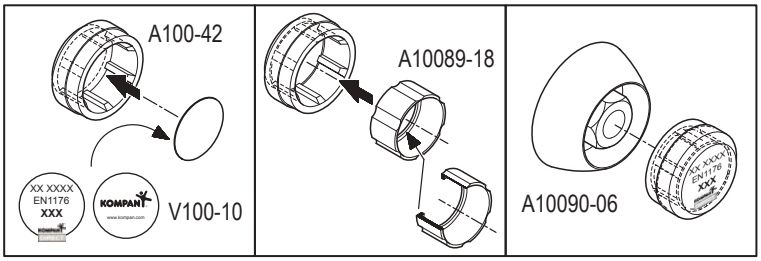

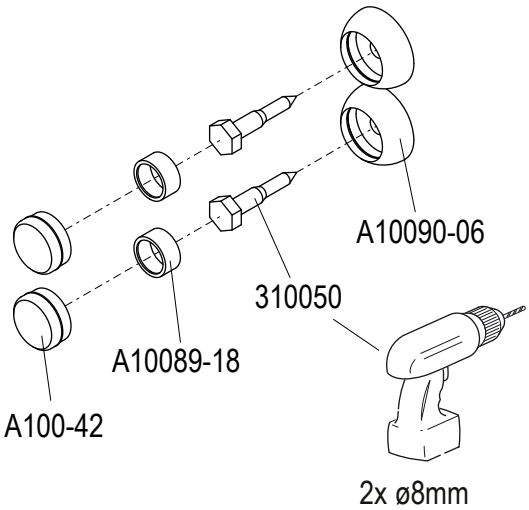

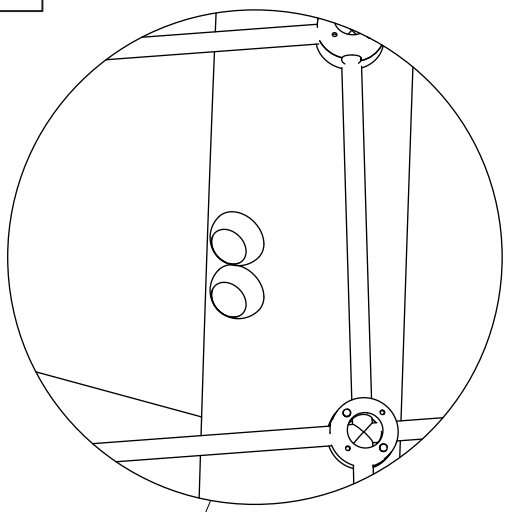

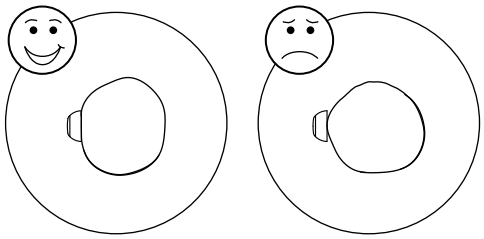

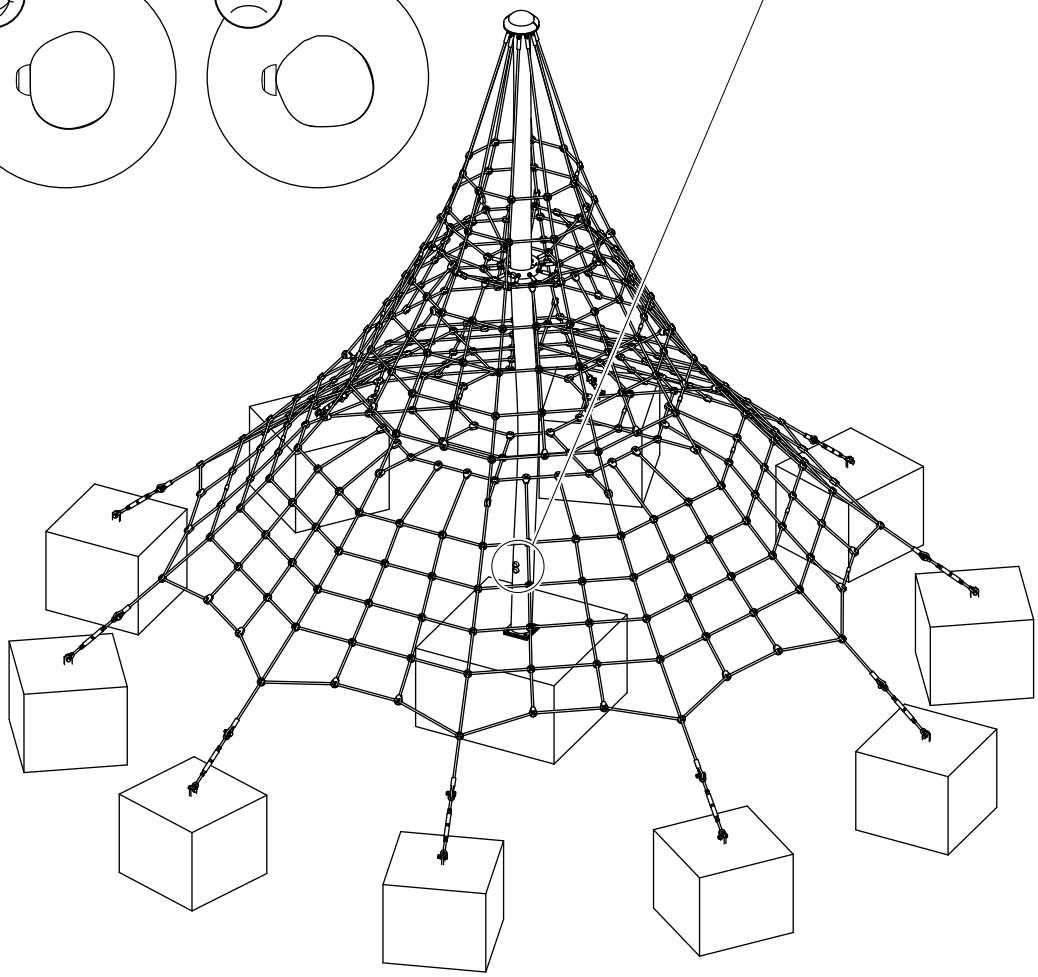

VNRO834 20170116 PetrJu

Copyright©KOMPAN A/S

Please tension the net after 6 months!
After that no more re-tensioning is required.
Bitte nach 6 Monaten Gebrauch das Netz spannen!
Danach ist kein Nachspannen mehr erforderlich.
Tendre le filet après 6 mois d'utilisation
Il ne sera plus nécessaire de retendre ensuite le filet
¡Tensa por favor la red después de 6 meses!
Después no se tiene que retensar más.
Si praga di verificare la tensione della rete dopo 6 mesi
Dopo di che la tensione non più è richiesto.
Gelieve het net na 6 maanden na te spannen.
Na 6 maanden is na spannen niet meer vereist; wel controleren.
Vänligen efterspänn nätet efter 6 månader!
Efter att inte mer spänning krävs.
Venligst efterspænd nettet efter 6 måneder!
Derefter er yderligere efterspænding unødvendig.
Проверьте натяжение через 6 месяцев!
При необходимости отрегулируйте натяжение.
Uudelleenkiristä verkko 6 kk kuluttua!
Tämän jälkeen verkkoa ei tarvitse enää kiristää.

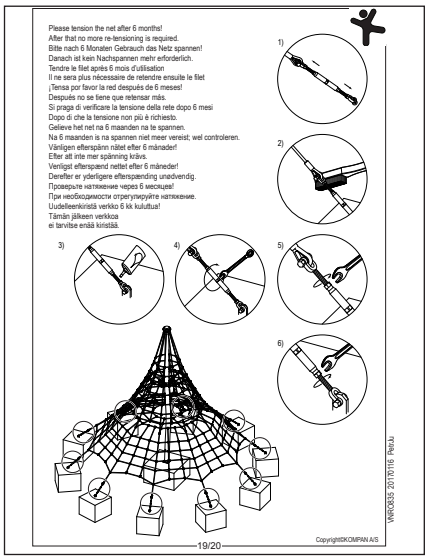

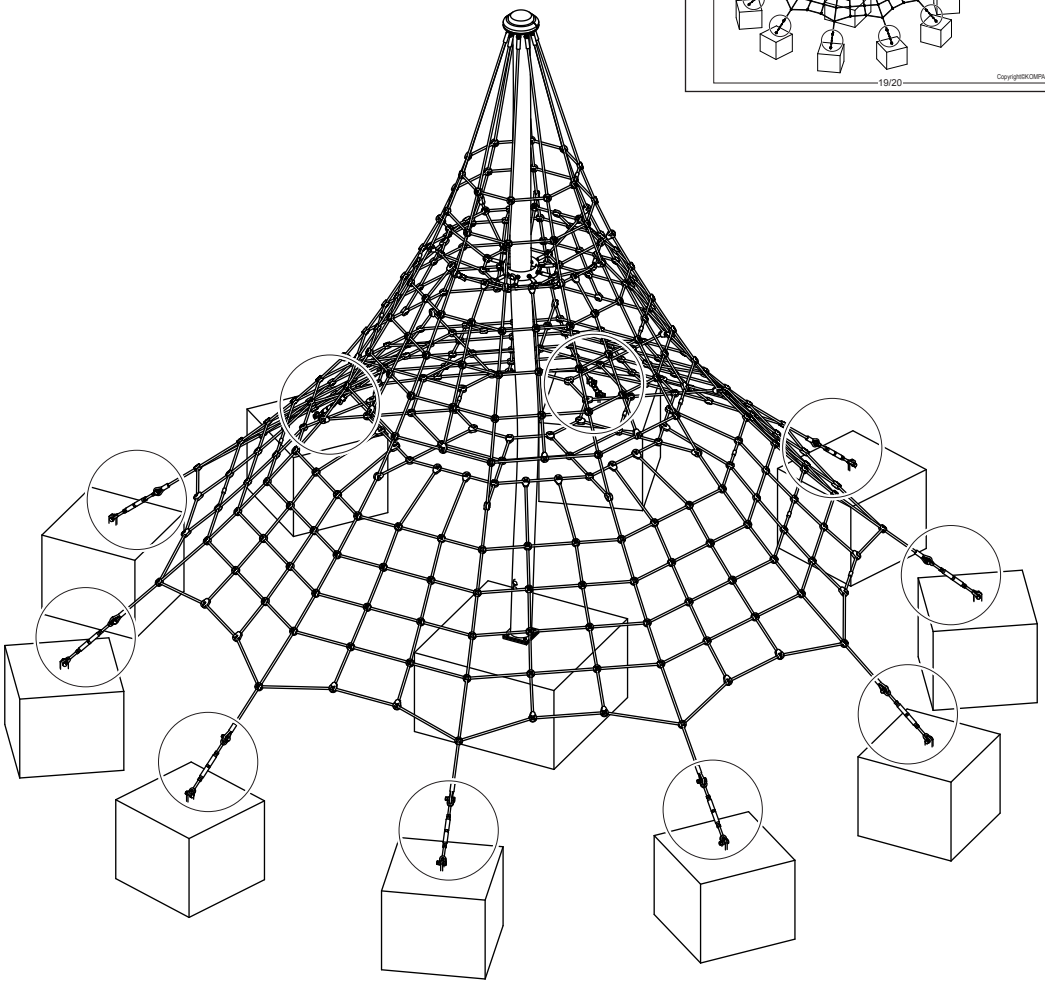

VNRO834 20170116 PetrJu

Copyright©KOMPAN A/S

Mainentance instruction
Wartungshinweise
Conseils d’entretien
Instrucciones de mantenimiento
Istruzioni per la manutenzione
Onderhoudsinstructies
Underhållsmanual
Vedligeholdelsesmanual
Инструкция по обслуживанию
Huolto-ohje

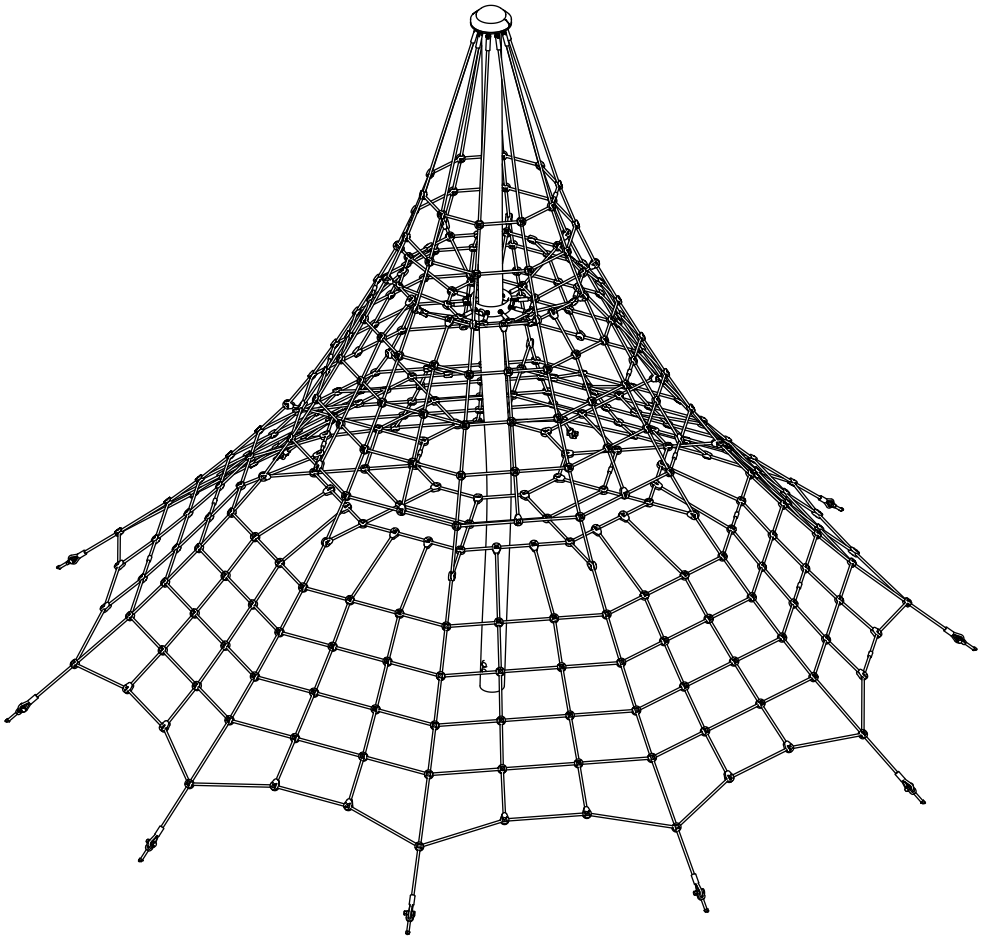

VNRO834 20170116 PetrJu

Copyright©KOMPAN A/S

Daily/ weekly mainentance
Tägliche/ wöchentliche Instandhaltung
Entretien quotidien / hebdomadaire
Mantenimiento diaro/semanal
Manutenzione giornaliera/ settimanale
Onderhoud per dag/ week
Underhåll varje dag/vecka
Daglig/ ugentlig vedligeholdelse
Ежедневный / еженедельный осмотр
Päivittäin/ viikoittain huolto

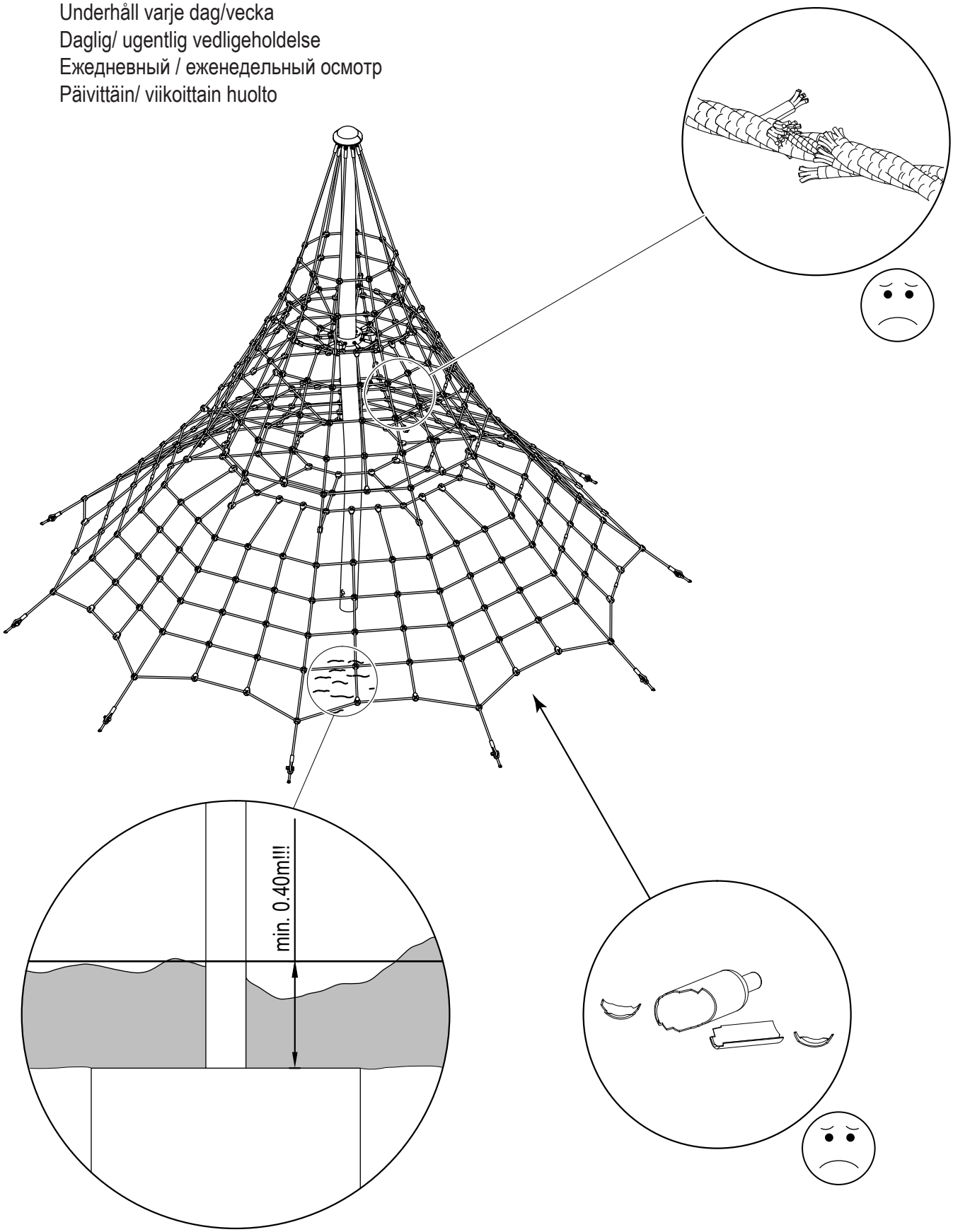

VNRO834 20170116 PetrJu

Copyright©KOMPAN A/S

Monthly/ seasonal mainentance
Monatliche/ saisonale Instandhaltung
Entretien mensuel / saisonnier
Mantenimiento mensal/ estacional
Manutenzione mensile/ stagionale
Onderhoud per maand/ seizoen
Underhåll varje månad/säsong
Månedlig/kvartalsvis vedligeholdelse
Ежемесячный / сезонный поддержка
Kuukausittain/ kausiluontoinen huolto

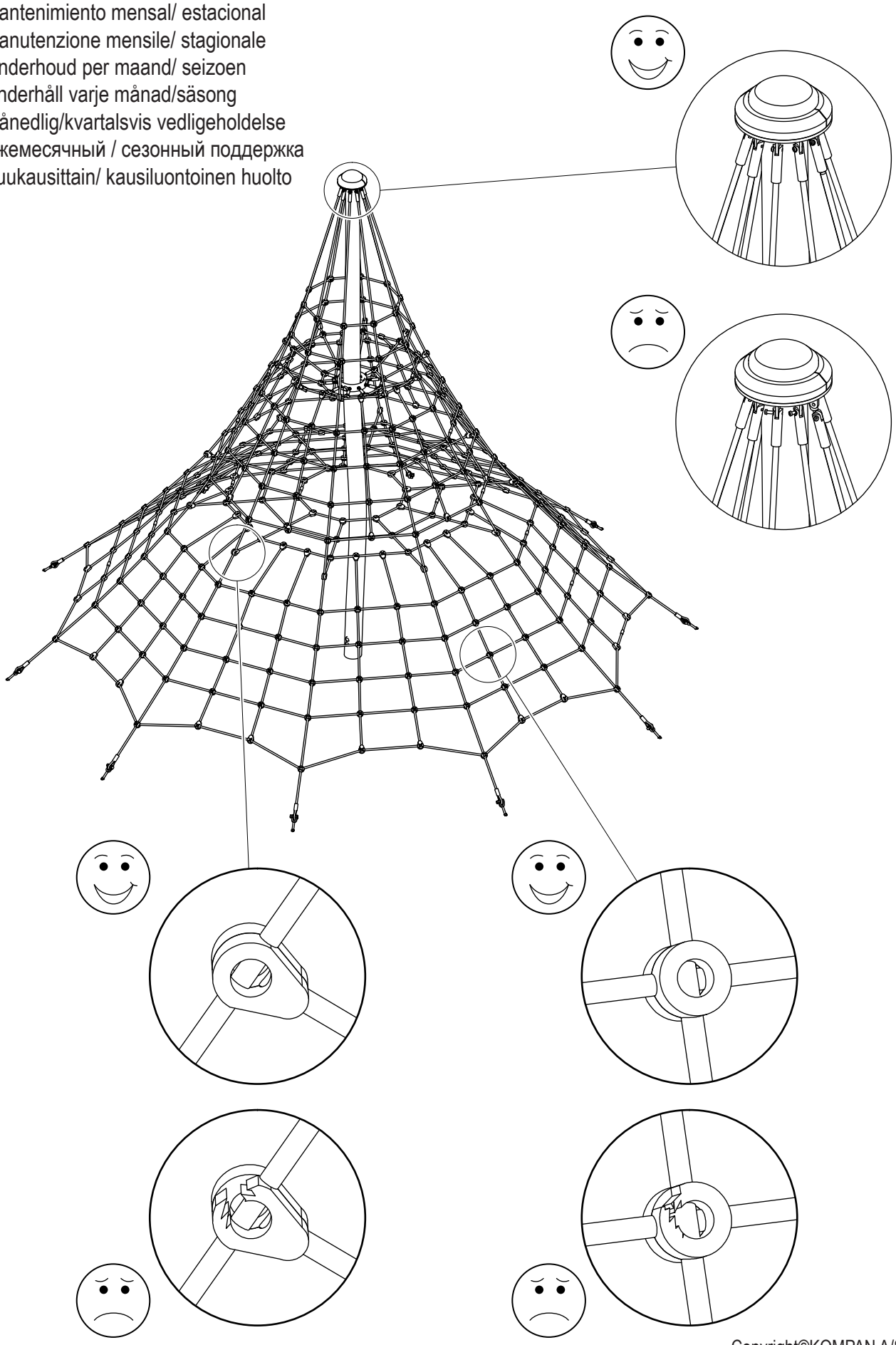

Copyright©KOMPAN A/S

VNRO834 20170116 PetrJu

Please tension the net after 6 months!
After that no more re-tensioning is required.
Bitte nach 6 Monaten Gebrauch das Netz spannen!
Danach ist kein Nachspannen mehr erforderlich.
Tendre le filet après 6 mois d'utilisation
Il ne sera plus nécessaire de retendre ensuite le filet
¡Tensa por favor la red después de 6 meses!
Después no se tiene que retensar más.
Si praga di verificare la tensione della rete dopo 6 mesi
Dopo di che la tensione non più è richiesto.
Gelieve het net na 6 maanden na te spannen.
Na 6 maanden is na spannen niet meer vereist; wel controleren.
Vänligen efterspänn nätet efter 6 månader!
Efter att inte mer spänning krävs.
Venligst efterspænd nettet efter 6 måneder!
Derefter er yderligere efterspænding unødvendig.
Проверьте натяжение через 6 месяцев!
При необходимости отрегулируйте натяжение.
Uudelleenkiristä verkko 6 kk kuluttua!
Tämän jälkeen verkkoa
ei tarvitse enää kiristää.

1)

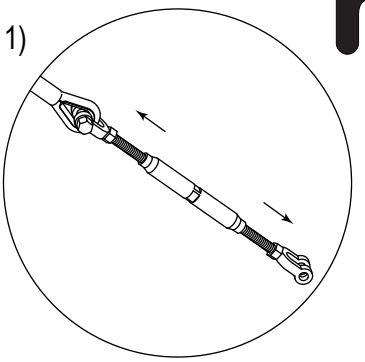

2)

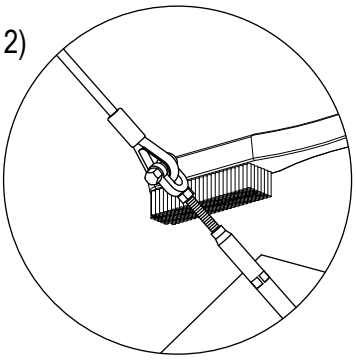

3)

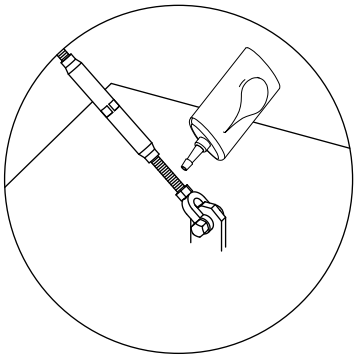

4)

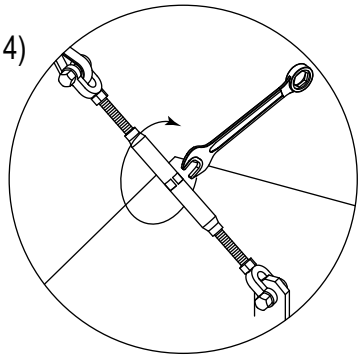

5)

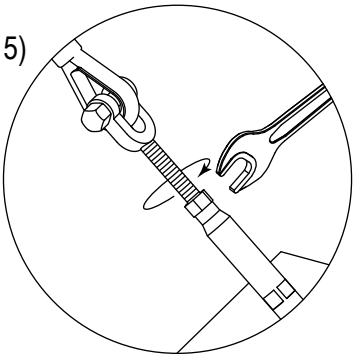

6)

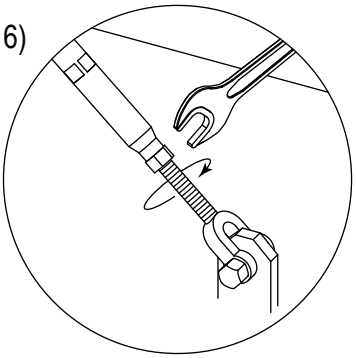

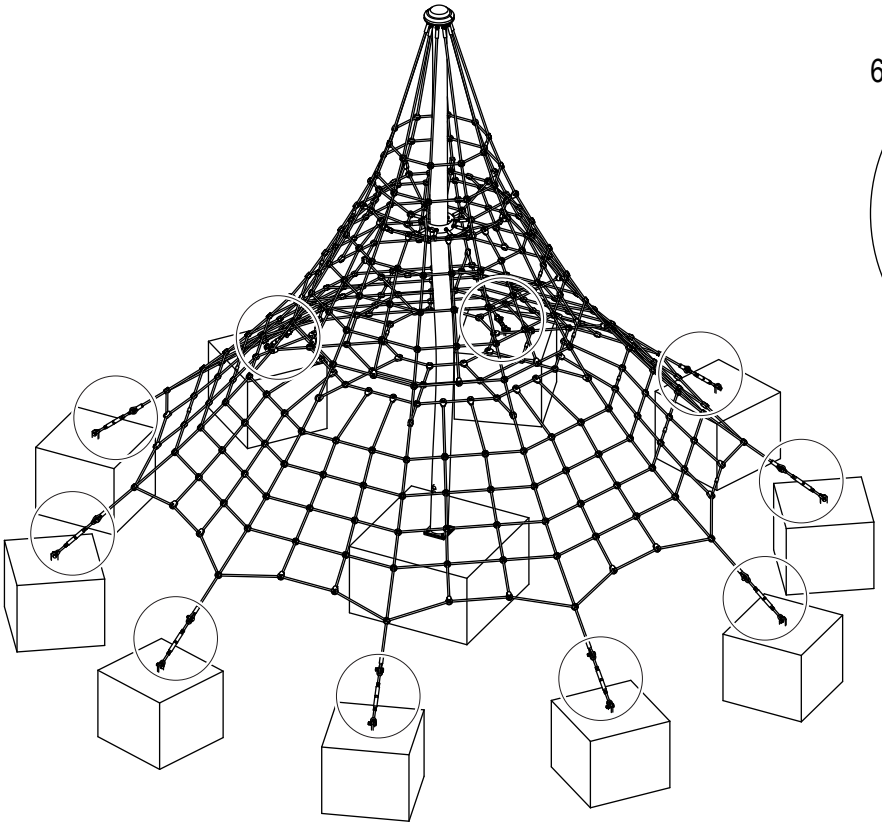

VNRO834 20170116 PetrJu

Copyright©KOMPAN A/S

Monthly/ seasonal mainentance
Monatliche/ saisonale Instandhaltung
Entretien mensuel / saisonnier
Mantenimiento mensal/ estacional
Manutenzione mensile/ stagionale
Onderhoud per maand/ seizoen
Underhåll varje månad/säsong
Månedlig/kvartalsvis vedligeholdelse
Ежемесячный / сезонный поддержка
Kuukausittain/ kausiluontoinen huolto

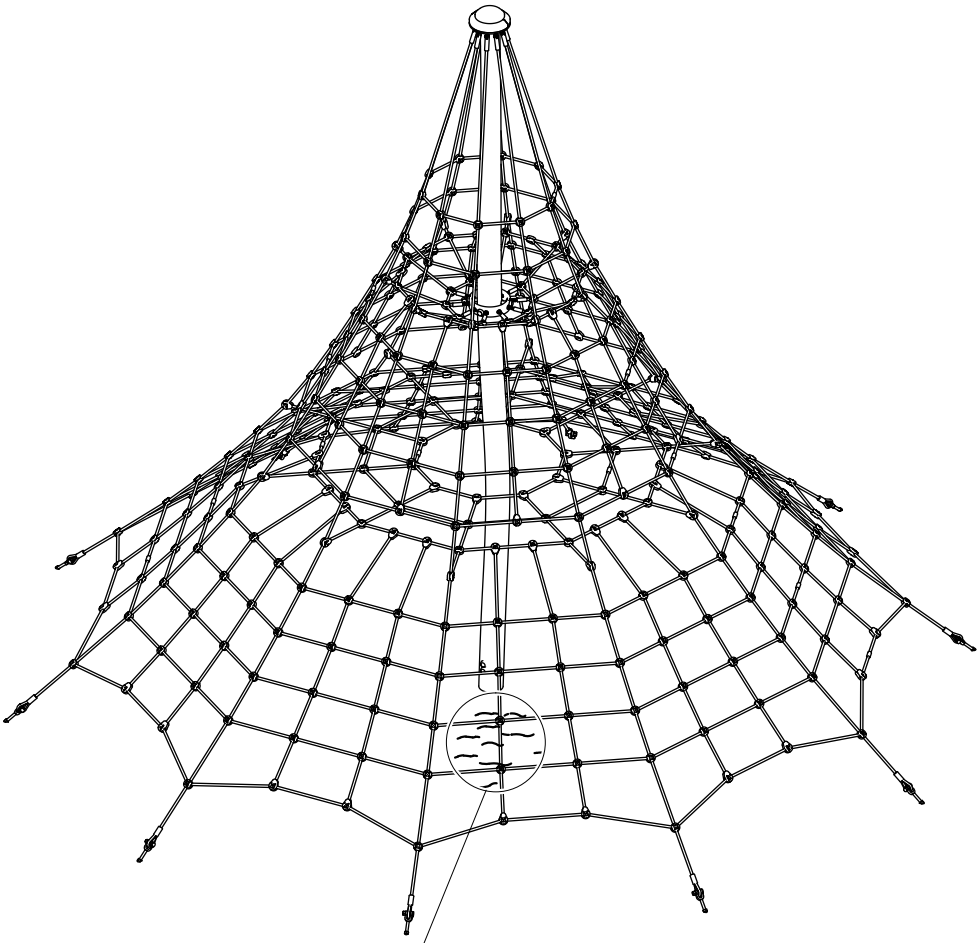

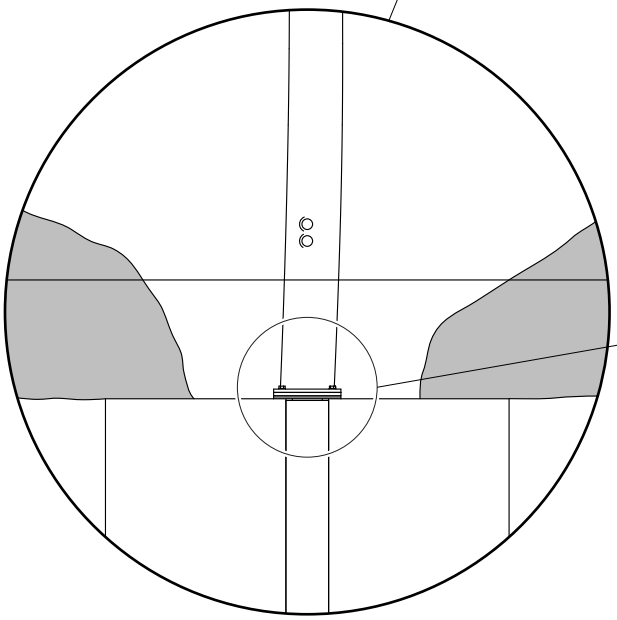

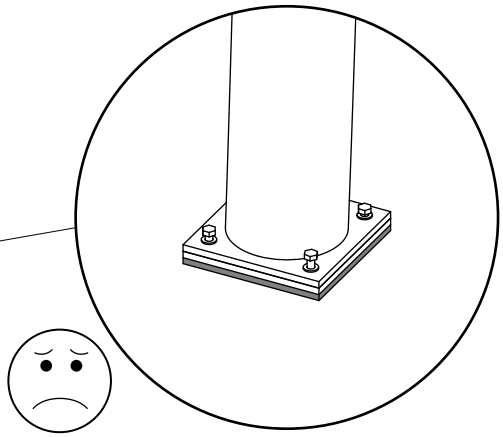

VNRO834 20170116 PetrJu

Copyright©KOMPAN A/S

Stilts

NRO806-0601

Item no. NRO806-0601	
General Product Information	
Dimensions LxWxH	4'2"x8'1"x3'7"
Age group	5 - 12
Play capacity (users)	3
Item color	

The Stilts are a playground classic that appeal to children repeatedly. The Stilts have a basic play message: balance through without touching the ground. The Stilts invite jumping or balancing from one to the next. They can also be used as individual seats and cater to meeting in groups. The Stilts support children who are developing their skills, thanks to their foot-steps and inclination: children can always lean to the side to regain balance. When balancing from stilt to stilt, children train their proprioception and sense of balance. Balance and proprioception are fundamental in confidently managing the body in space. Crossing the Stilts with friends trains turn-taking and negotiation. These are important social-emotional skills that are basic to the ability to form friendships and relate to peers.

Data is subject to change without prior notice.

Stilts

NRO806-0601

Stilts
Physical: balancing that supports the vestibular system as well as cross coordination. **Social-Emotional:** cooperation and turn-taking.

Data is subject to change without prior notice.

Stilts

NRO806-0601

All Organic Robinia products by KOMPAN are made of Robinia wood from sustainable European sources. On request it can be supplied as FSC® Certified (FSC® C004450).

The Robinia wood can be supplied as untreated raw wood or painted with a brown colored transparent pigment that maintains the golden wood color of the wood.

Item no. NRO806-0601	
Installation Information	
Max. fall height	3'7"
Safety surfacing area	286ft²
Total installation time	3.4
Excavation volume	0.61yd³
Concrete volume	0.21yd³
Footing depth (standard)	2'1"
Shipment weight	518lbs
Anchoring options	In-ground ✔
Warranty Information	
Robinia Wood	10 Years
Spare Parts Availability	10 Years

Elevated activities **0**	Accessible elevated activities	Accessible ground level activities	Accessible ground level play types
Present	**0**	**1**	**1**
Required	**0**	**1**	**1**

Data is subject to change without prior notice.

Sustainability Data

NRO806-0601

Cradle to Gate A1-A3	Total CO_2 emission	CO_2e/kg	Recycled materials
	kg CO_2e	kg CO_2e/kg	%
NRO806-0601	19.52	0.10	0.02

The overall framework applied for these factors is the Environmental Product Declaration (EPD), which quantifies "environmental information on the life cycle of a product and enable comparisons between products fulfilling the same function" (ISO, 2006). This follows the structure and applies a Life-Cycle Assessment approach to the entire Product stage from raw material through manufacturing (A1-A3))

Kompan A/S
C.F. Tietgens Boulevard 32C
DK-5220 Odense SØ
Denmark

Validation of CO_2 calculation method
BUREAU VERITAS
HSE Denmark A/S

Verification of CO_2 calculation of: Nature play

Data version no. 2023-10-05

The CO_2 calculation and data are in compliance with the principles of a carbon footprint impact according to the GHG protocol (Greenhouse Gas Protocol), Scope 3, cradle to gate related to all individual components in the product category: "Nature play" represented by item no.: NRO409-0621.

(Scope 3 emissions include emission sources in the upstream and downstream value chain).

Date: 30. October 2023 | Valid until: 30. October 2025
Verified by:

Julie Marie Vejsgaard Larsen, LCA & EPD Consultant

Verification based on report: Validation of CO_2 calculation of 9 categories of Kompan product line, version 1.0, prepared by: Bureau Veritas HSE, Denmark: Julie M. V. Larsen.

Publication date: 30. October 2023

By Bureau Veritas HSE
www.bureauveritas.dk
+45 7731 1000

Data is subject to change without prior notice.

Stilts

NRO806-0601

* Max fall height | ** Total height | *** Safety surfacing area	* Max fall height | ** Total height

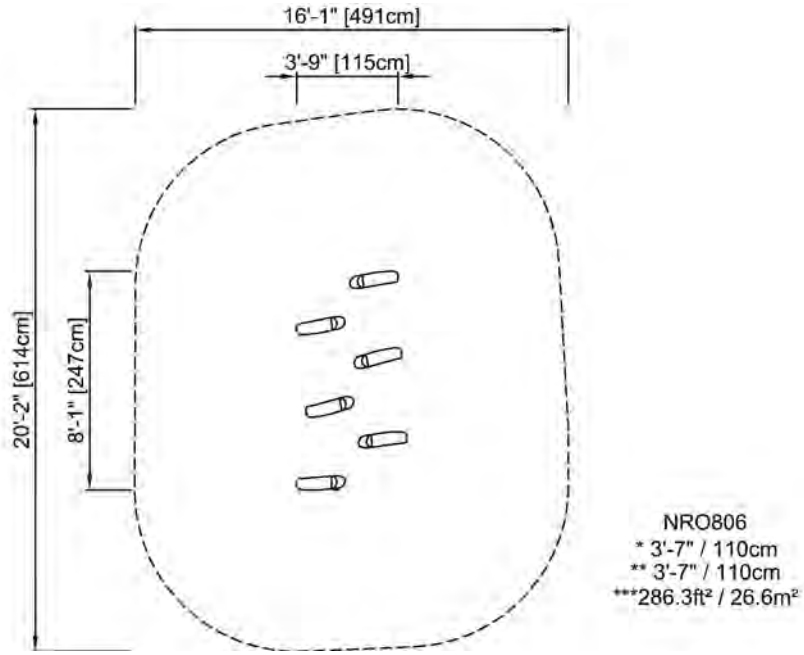

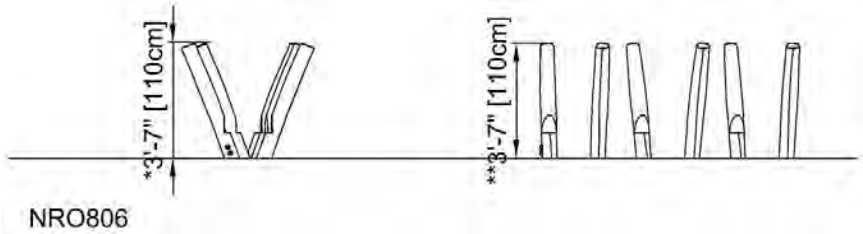

Click to see TOP VIEW	Click to see SIDE VIEW

Data is subject to change without prior notice.

NRO806-0601/FSC
NRO806-0611/FSC
NRO806-1002/FSC
NRO806-1012/FSC
ART863-0601

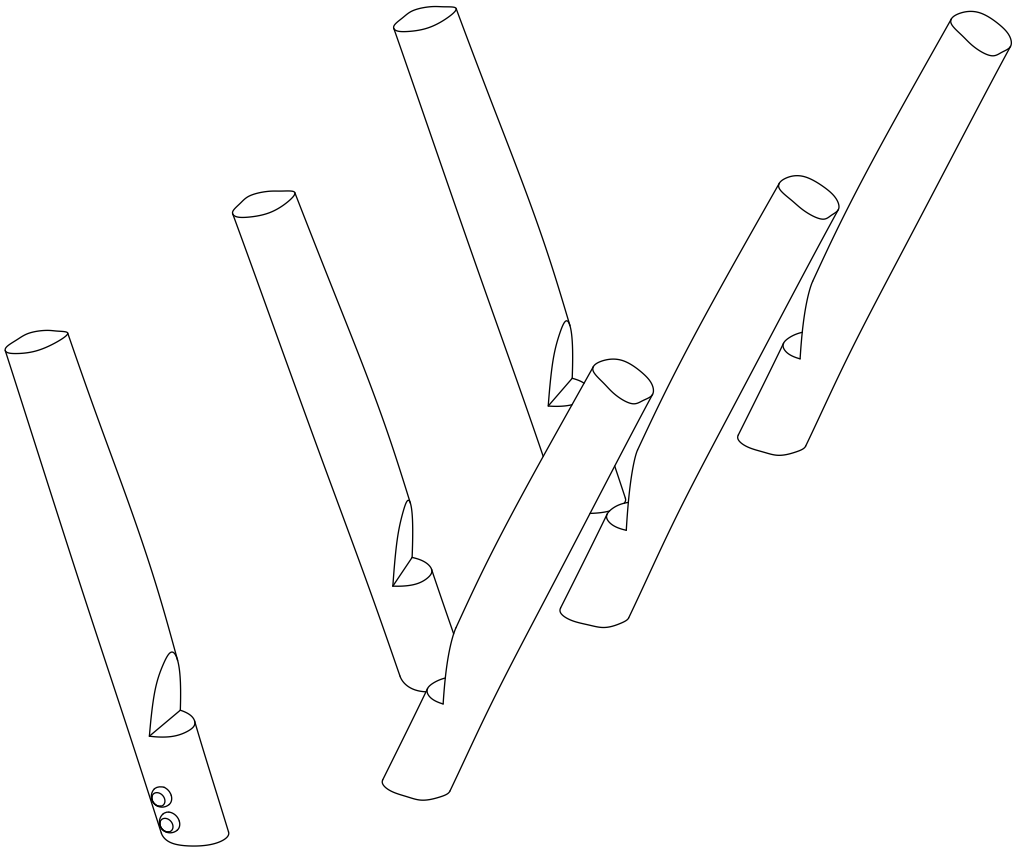

NRO806XXXX 20130531 PetrJu

Copyright©KOMPAN A/S

Safety zone in accordance with EN 1176/AS4685
Sicherheitsabstand gemäß EN 1176/AS4685
Espace d'évolution selon EN 1176/AS4685
Zona de seguridad según EN 1176/AS4685
Área de segurança de acordo com a EN1176/AS4685
Distanze di sicurezza in conformità con lo standard EN 1176/AS4685
Veiligheidsgebied in overeenstemming met EN 1176/AS4685
Säkerhetsområde enl EN 1176/AS4685
Sikkerhedsareal iht. EN 1176/AS4685
Зона безопасности в соответствии с EN 1176/AS4685
EN1176/AS4685-normin mukainen turva-alue

NRO806-0601
1:100

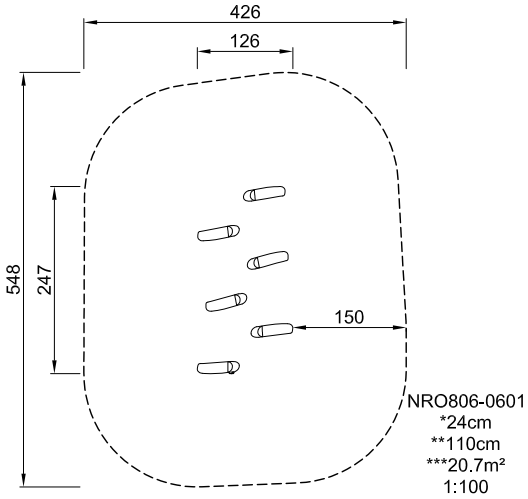

NRO806-0601
*24cm
**110cm
***20.7m²
1:100

* Free height of fall
Freie Fallhöhe
Hauteur de chute libre
Altura de caída libre
Altura de queda livre
Altezza di caduta libera
Vrije valhoogte
Fri fallhöjd
Fri faldhøjde
Высота свободного падения
Vapaa putoamiskorkeus

All measurements are in cm
Alle Maßangaben in cm
Toutes les dimensions sont indiquées en cm
Todas las medidas están indicadas en cm
Todas as medidas estão em cm
Tutte le misure sono in cm
Alle afmetingen zijn in cm
Alla mått är angivna i cm
Alle mål er angivet i cm
Все измерения в см.
Kaikki ohjeessa mainitut mitat ovat senttimetrejä.

Please note: The safety zone shown on this drawing is in accordance with EN 1176. There may be some locations where a larger safety zone is required. If in doubt, please contact your play consultant.

Achtung: Der angegebene Sicherheitsabstand entspricht EN 1176. Bestimmte Länder schreiben größere Sicherheitsabstände vor. Bitte wenden Sie sich in Zweifelsfällen an Ihren Berater.

Attention : l'espace d'évolution montré est conforme à EN 1176. Dans certains pays, un espace d'évolution plus grand peut être exigé. Prière de contacter notre conseiller en cas de doute.

Observe: La zona de seguridad demostrada en este dibujo cumple con EN 1176. En algunos sitios puede ser necesaria una zona de seguridadmás grande. En caso de tener alguna duda, por favor póngase en contacto con nuestro consultor.

Nota: A área de segurança ilustrada neste desenho está de acordo com a EN1176. Podem existir alguns territórios onde seja exigida uma área de segurança maior. Na dúvida, por favor contacte o seu consultor local da KOMPAN.

Attenzione: la distanza di sicurezza specificata è conforme ai requisiti EN 1176. In alcuni paesi, le norme locali possono richiedere distanze di sicurezza maggiori. In caso di dubbi, contattare il nostro consulente.

N.B.: het getoonde veiligheidsgebied is in overeenstemming met EN 1176. In sommige landen kan een groter veiligheidsgebied vereist zijn. In geval van twijfel onze adviseur raadplegen.

Obs: Det markerade säkerhetsområdet följer EN 1176. I vissa länder kan det finnas krav på större säkerhetsområde. Kontakta vänligen vår konsulent om du är osäker.

Obs.: Det viste sikkerhedsareal er i overensstemmelse med EN 1176. I nogle lande kan der være krav om større sikkerhedsareal. Kontakt venligst vores konsulent ved tvivlsspørgsmål.

Внимание: Зона безопасности указана в соответствии с EN 1176. Возможны случаи, когда требуется увеличение зоны безопасности. В затруднительных случаях обращайтесь к Вашему консультанту.

Huom: Tämän piirustuksen turva-alue on EN1176-normin mukainen. Joissain sijoituspaikoissa saatetaan edellyttää suurempaa turva-aluetta. Jos olet epävarma, otathan yhteyttä KOMPANiin.

Copyright©KOMPAN A/S

NRO806XXXX 20130531 PetrJu

Safety zone in accordance with ASTM 1487/CSA Z614
Sicherheitsabstand gemäß ASTM 1487/CSA Z614
Espace d'évolution selon ASTM 1487/CSA Z614
Zona de seguridad según ASTM 1487/CSA Z614
Distanze di sicurezza in conformità con lo standard ASTM 1487/CSA Z614
Veiligheidsgebied in overeenstemming met ASTM 1487/CSA Z614
Säkerhetsområde enl ASTM 1487/CSA Z614
Sikkerhedsareal iht. ASTM 1487/CSA Z614
Зона безопасности в соответствии с ASTM 1487/CSA Z614
ASTM 1487/CSA Z614-normin mukainen turva-alue

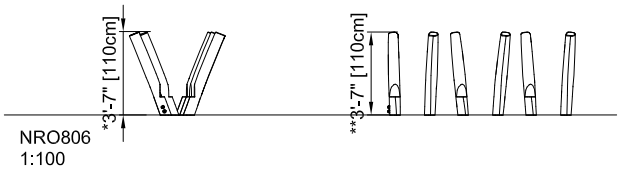

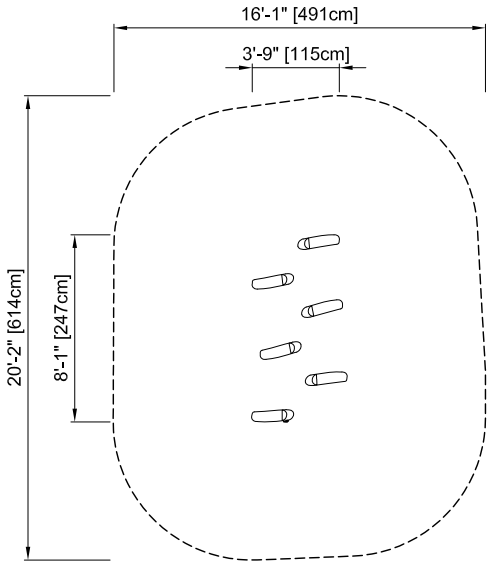

NRO806-0601
* 3'-7" / 110cm
** 3'-7" / 110cm
***286.3ft² / 26.6m²
1:100

* Free height of fall
Freie Fallhöhe
Hauteur de chute libre
Altura de caída libre
Altezza di caduta libera
Vrije valhoogte
Fri fallhöjd
Fri faldhøjde
Высота свободного падения
Vapaa putoamiskorkeus

Please note: The safety zone shown on this drawing is in accordance with ASTM 1487/CSA Z614. There may be some locations where a larger safety zone is required. If in doubt, please contact your play consultant.

Achtung: Der angegebene Sicherheitsabstand entspricht ASTM 1487/CSA Z614. Bestimmte Länder schreiben größere Sicherheitsabstände vor. Bitte wenden Sie sich in Zweifelsfällen an Ihren Berater.

Attention : l'espace d'évolution montré est conforme à ASTM 1487/CSA Z614. Dans certains pays, un espace d'évolution plus grand peut être exigé. Prière de contacter notre conseiller en cas de doute.

Observe: La zona de seguridad demostrada en este dibujo cumple con ASTM 1487/CSA Z614. En algunos sitios puede ser necesaria una zona de seguridad más grande. En caso de tener alguna duda, por favor póngase en contacto con nuestro consultor.

Attenzione: la distanza di sicurezza specificata è conforme ai requisiti ASTM 1487/CSA Z614. In alcuni paesi, le norme locali possono richiedere distanze di sicurezza maggiori. In caso di dubbi, contattare il nostro consulente.

N.B.: het getoonde veiligheidsgebied is in overeenstemming met ASTM 1487/CSA Z614. In sommige landen kan een groter veiligheidsgebied vereist zijn. In geval van twijfel onze adviseur raadplegen.

Obs: Det markerade säkerhetsområdet följer ASTM 1487/CSA Z614. I vissa länder kan det finnas krav på större säkerhetsområde. Kontakta vänligen vår konsulent om du är osäker.

Obs.: Det viste sikkerhedsareal er i overensstemmelse med ASTM 1487/CSA Z614. I nogle lande kan der være krav om større sikkerhedsareal. Kontakt venligst vores konsulent ved tvivlsspørgsmål.

Внимание: Зона безопасности указана в соответствии с ASTM 1487/CSA Z614. Возможны случаи, когда требуется увеличение зоны безопасности. В затруднительных случаях обращайтесь к Вашему консультанту.

Huom: Tämän piirustuksen turva-alue on ASTM 1487/CSA Z614-normin mukainen. Joissain sijoituspaikoissa saatetaan edellyttää suurempaa turva-aluetta. Jos olet epävarma, otathan yhteyttä KOMPANiin.

Copyright©KOMPAN A/S

Important! The concrete must be sufficiently hardened before the play item may be used.
Total volume of concrete: Min 0,156 m³

Wichtig! Vor der Inbetriebnahme des Spielreräts muß der Beton ausreichend abgebunden haben.
Betonverbrauch insgesamt: mind. 0,156 m³

Important! Le béton doit avoir suffisamment durci avant de mettre en service l'équipment de jeux.
Consommation totale de bèton: au minimum 0,156 m³

Importante! El hormigón debe estar suficentemente endurecido antes de comenzar a utilizar el equipo de juego. Consumo total de hormigón: Min. 0,156 m³

Importante! Prima de utilizzare le attrezzature da gioco, il cemento dve essere sufficientemente solidificato. Volume totale di cemento: min. 0,156 m³

Belangrijk! Het beton moet voldoende gehard zijn voordat het speeltoestel in gebruik wordt genomen.
Totale benodigde hoeveelheid beton: min. 0,156 m³

Viktigt! Betongen måste ha härdat tillräckligt innan lekredskapet börjar användas.
Total betongåtgång: min. 0,156 m³

Vigtigt! Betonen skal være tilstrækkeligt hærdet, før legeredskabet tages i brug.
Totalt betonforbrug: Min. 0,156 m³

Важно! Перед использованием сооружений убедитесь, что бетон затвердел.
Сумарный объем бетона: мин. 156 л.

HUOM! Betonivalun on oltava tarpeeksi kuiva, ennen kuin leikkivälinettä saa käyttää.
Betonoinnin minimikokonaismäärä; 0,156 m³

NRO806-0601/FSC
NRO806-0611/FSC
ART863-0601

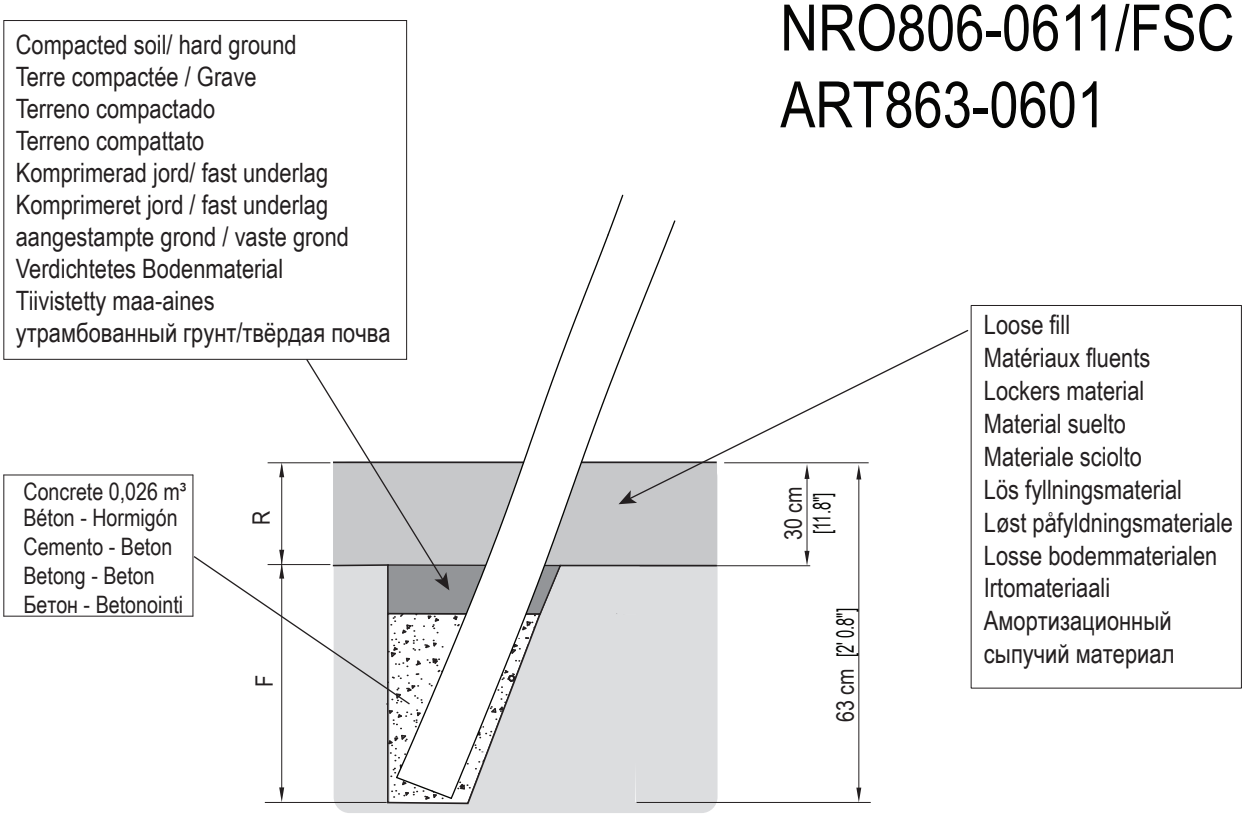

R + F = 63 cm [2' 0.8"]

NRO806XXX 20130531 PetrJu

Copyright©KOMPAN A/S

Important! The concrete must be sufficiently hardened before the play item may be used.
Total volume of concrete: Min 0,156 m³

Wichtig! Vor der Inbetriebnahme des Spielreräts muß der Beton ausreichend abgebunden haben.
Betonverbrauch insgesamt: mind. 0,156 m³

Important! Le béton doit avoir suffisamment durci avant de mettre en service l'équipment de jeux.
Consommation totale de bèton: au minimum 0,156 m³

Importante! El hormigón debe estar suficentemente endurecido antes de comenzar a utilizar el equipo de juego. Consumo total de hormigón: Min. 0,156 m³

Importante! Prima de utilizzare le attrezzature da gioco, il cemento dve essere sufficientemente solidificato. Volume totale di cemento: min. 0,156 m³

Belangrijk! Het beton moet voldoende gehard zijn voordat het speeltoestel in gebruik wordt genomen.
Totale benodigde hoeveelheid beton: min. 0,156 m³

Viktigt! Betongen måste ha härdat tillräckligt innan lekredskapet börjar användas.
Total betongåtgång: min. 0,156 m³

Vigtigt! Betonen skal være tilstrækkeligt hærdet, før legeredskabet tages i brug.
Totalt betonforbrug: Min. 0,156 m³

Важно! Перед использованием сооружений убедитесь, что бетон затвердел.
Сумарный объем бетона: мин. 156 л.

HUOM! Betonivalun on oltava tarpeeksi kuiva, ennen kuin leikkivälinettä saa käyttää.
Betonoinnin minimikokonaismäärä; 0,156 m³

NRO806-1002/FSC
NRO806-1012/FSC

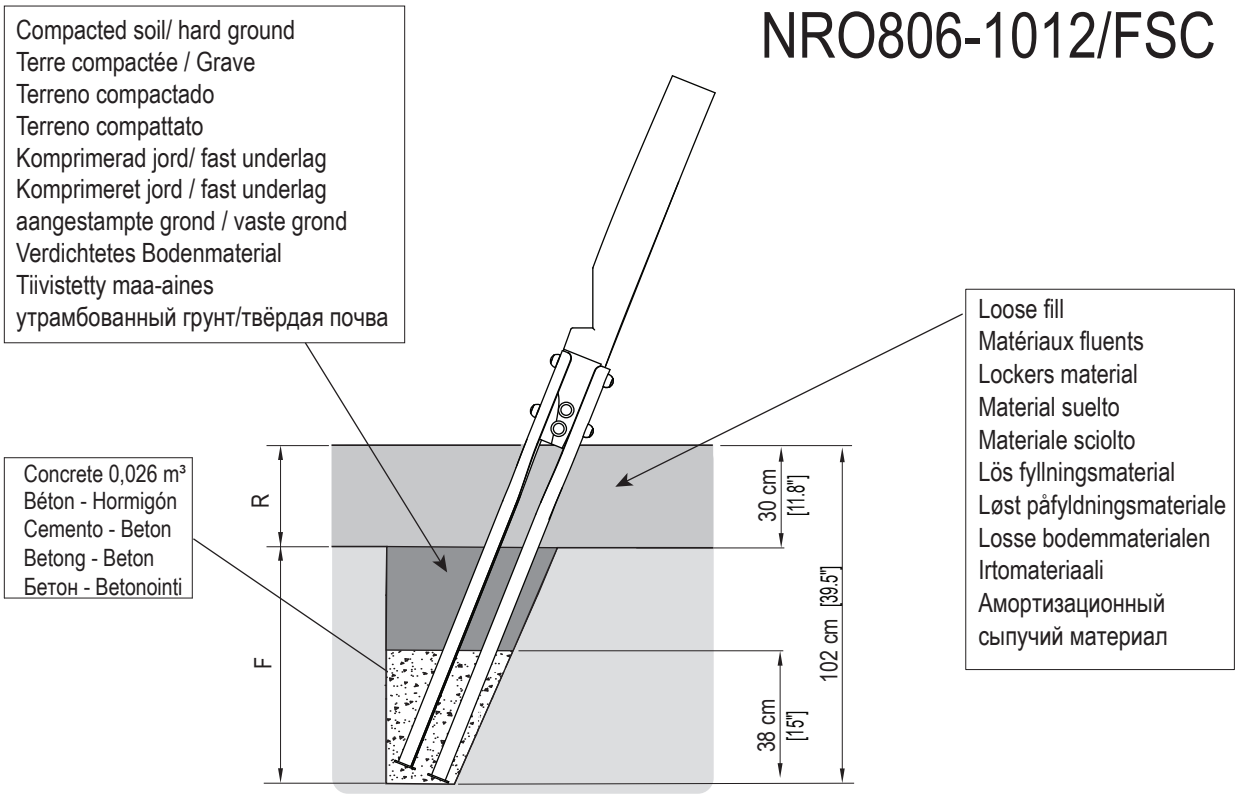

R + F = 102 cm [39.5"]

NRO806XXXX 20130531 PetrJu

Copyright©KOMPAN A/S

NRO806-0601/FSC
NRO806-0611/FSC
ART863-0601

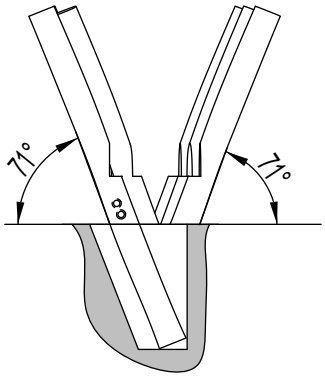

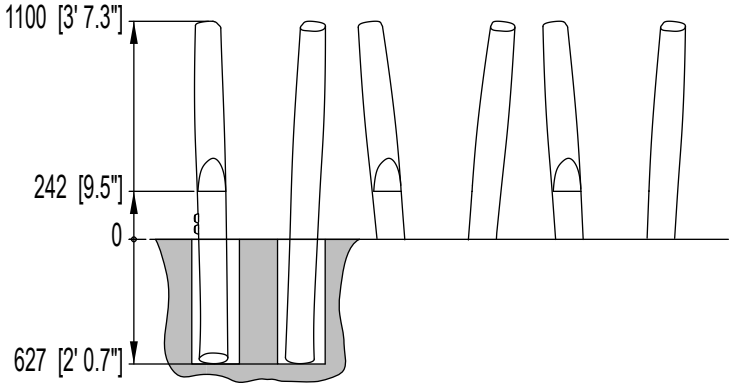

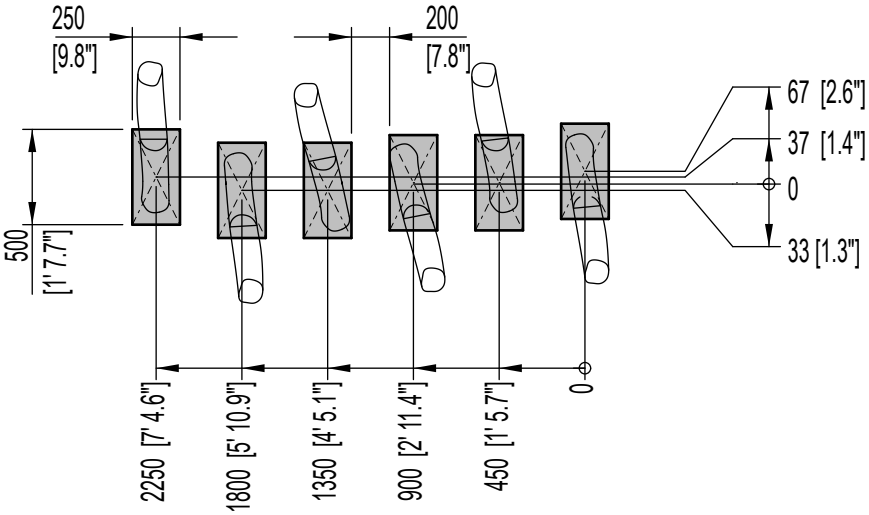

NRO806XXXX 20130531 PetrJu

Copyright©KOMPAN A/S

NRO806-1002/FSC
NRO806-1012/FSC

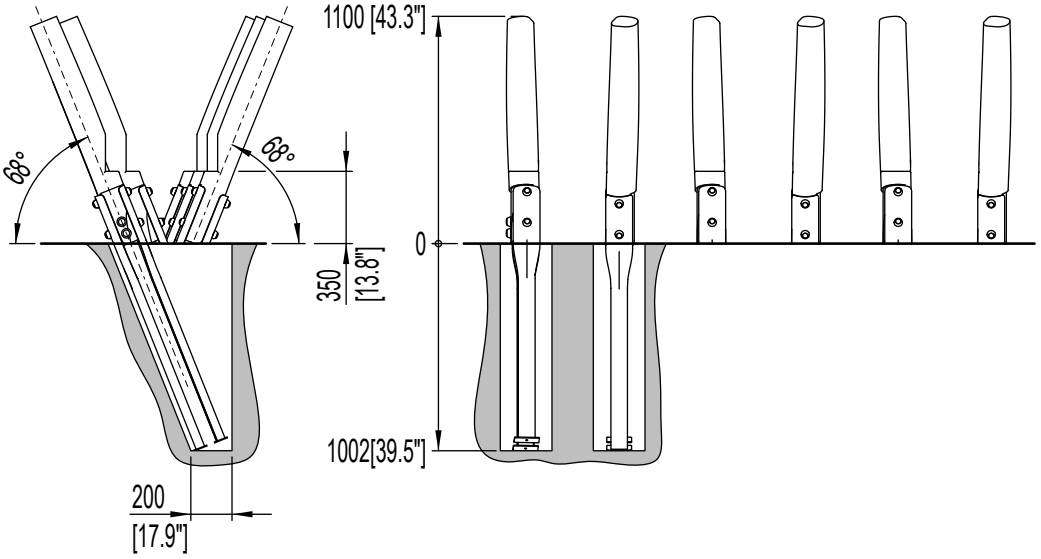

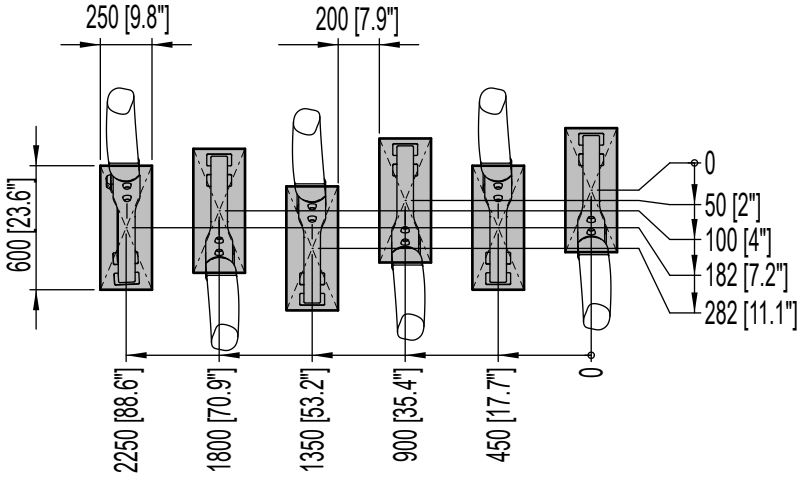

NRO806XXXX 20130531 PetrJu

Copyright©KOMPAN A/S

NRO806-0601/FSC
NRO806-0611/FSC
ART863-0601

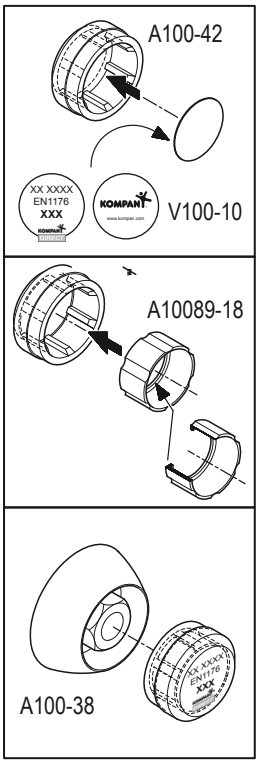

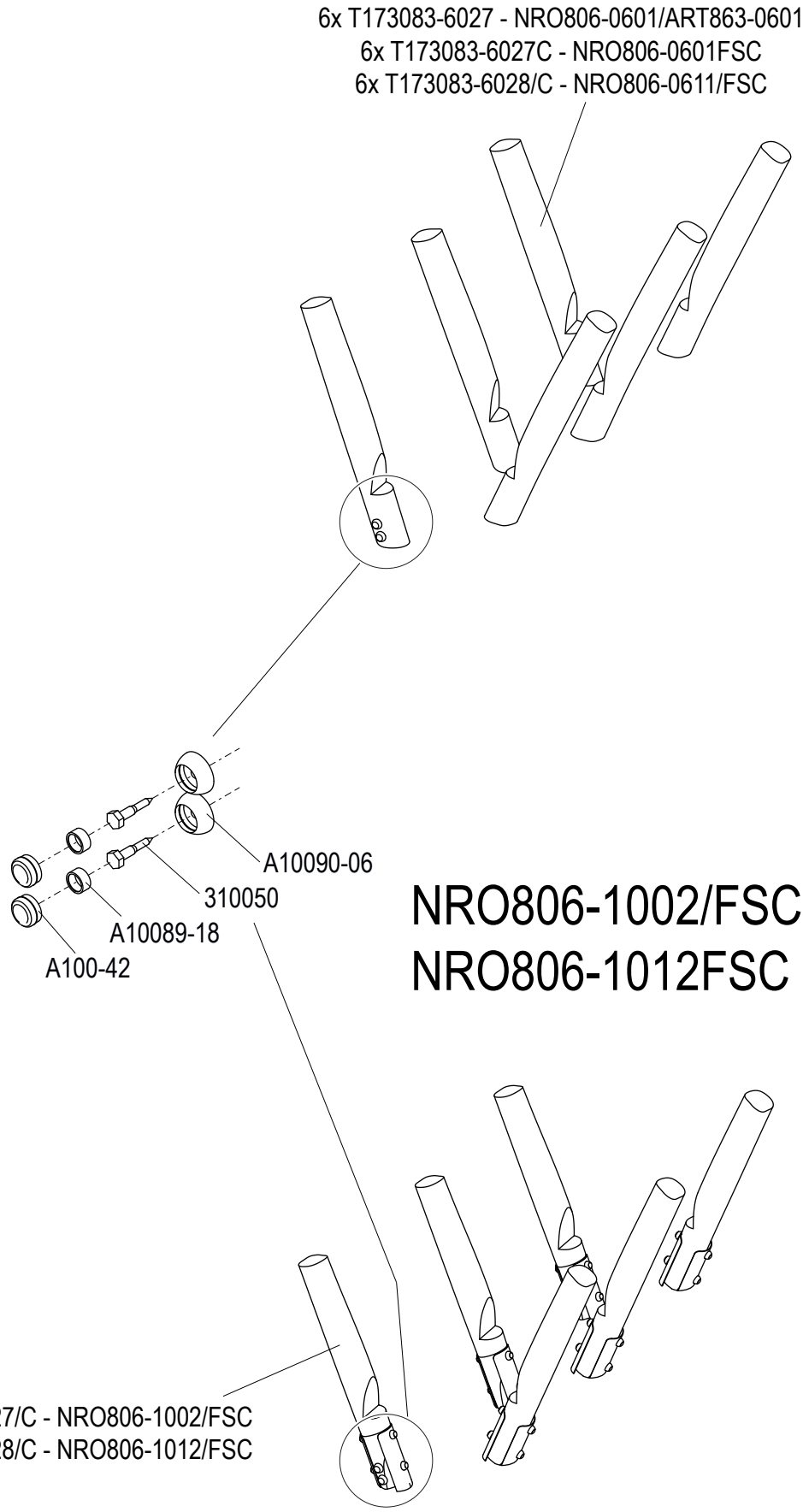

NRO806XXXX 20130531 PetrJu

Copyright©KOMPAN A/S

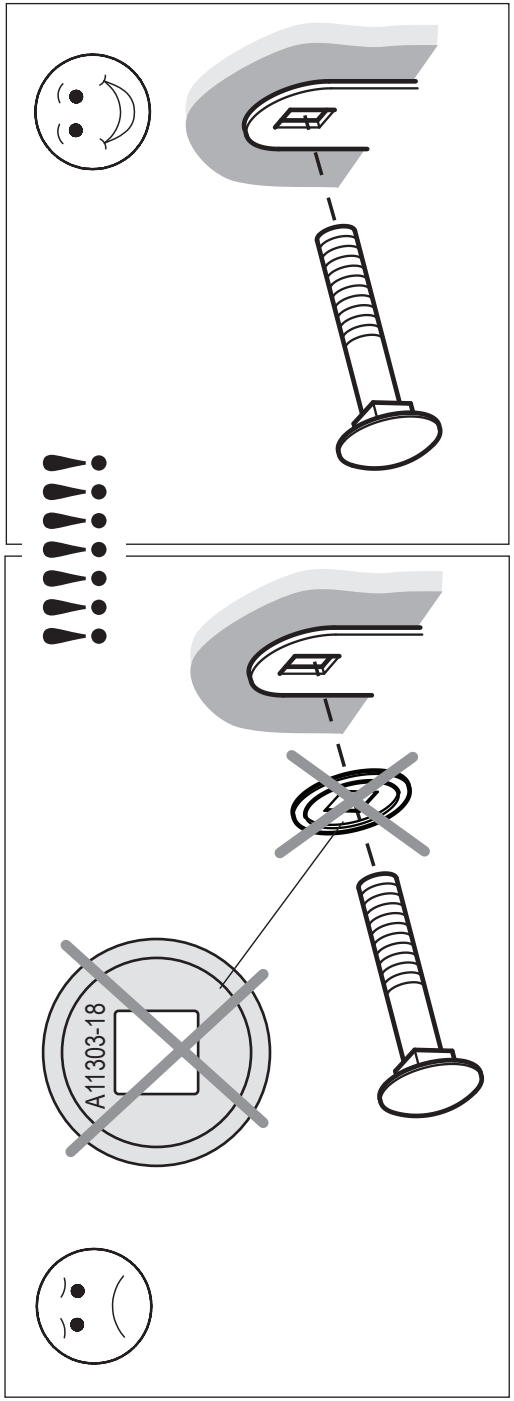

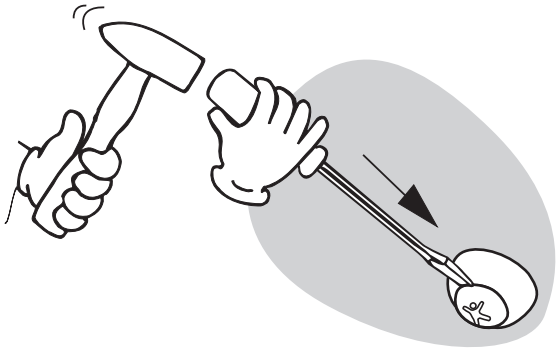

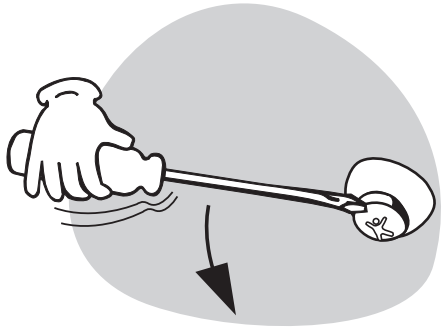

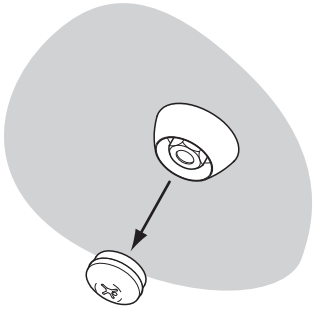

Do-Nut vejledning
Do-Nut - Anleitung
Do-Nut instructions
Instrucciones del Do-Nut
Instructions Do-Nut
Istruzioni per Do-Nut
Do-Nut handleiding
Do-Nut anvisningar
Do-Nut asennusohjeet
Do-Nut инструкция

KOMPAN®
Playful Living

V00001 140306 MarSky / RikBon

Parkour 5

NRO857

Item no. NRO857-1003	
General Product Information	
Dimensions LxWxH	43'3"x40'5"x8'11"
Age group	5 - 12
Play capacity (users)	33
Color options	

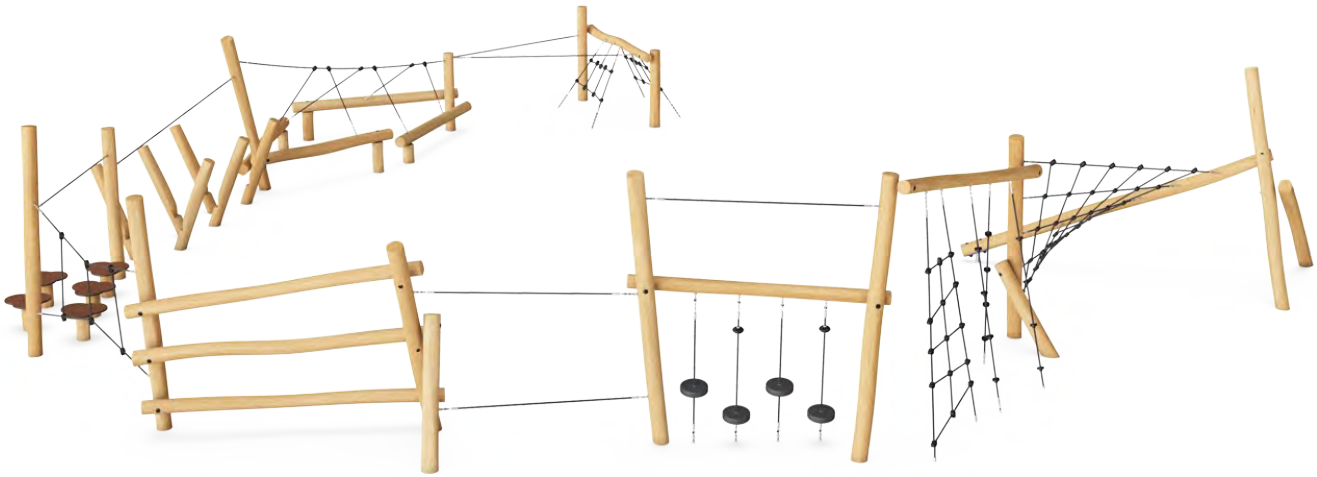

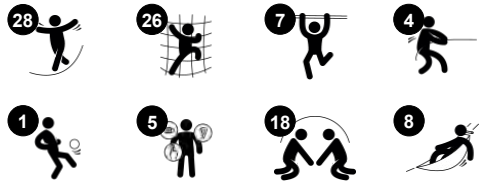

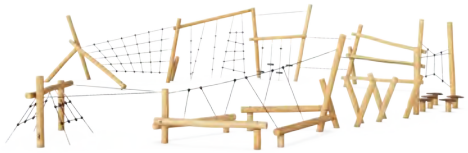

WOW! The Parkour 5 has wild appeal for 6-12 year-olds. It's a fitness course that's fun and also challenging. The variation in climbing, crawling, balancing and meeting activities will make children come back again and again. The many inclined, twisted and vertical nets and the different mesh sizes offer great play challenges. Climbing or crawling up, down and through the Parkour 5 stimulates agility, balance and coordination. These motor skills are necessary to managing the world securely and achieving physical confidence. The lovely swaying seat points and the horizontal beams are great for meeting and socializing. The many ropes and their bouncy character make them a constant balance and muscle trainer, even when seated. When climbing through the Parkour 5, children train their cooperation, negotiation and turn-taking skills. These skills can be hard to teach, but easily learned in play.

Data is subject to change without prior notice.

Parkour 5

NRO857

Twisted climbing net
Physical: supports cross coordination as well as sense of balance and space. Core, leg and arm muscles are trained, too. These physical skills add to self awareness and help when judging your body in time and space, a crucial skill. **Social-Emotional:** the twisted shape creates varied seating possibilities and interaction from one side to the other. This develops empathy and cooperation.

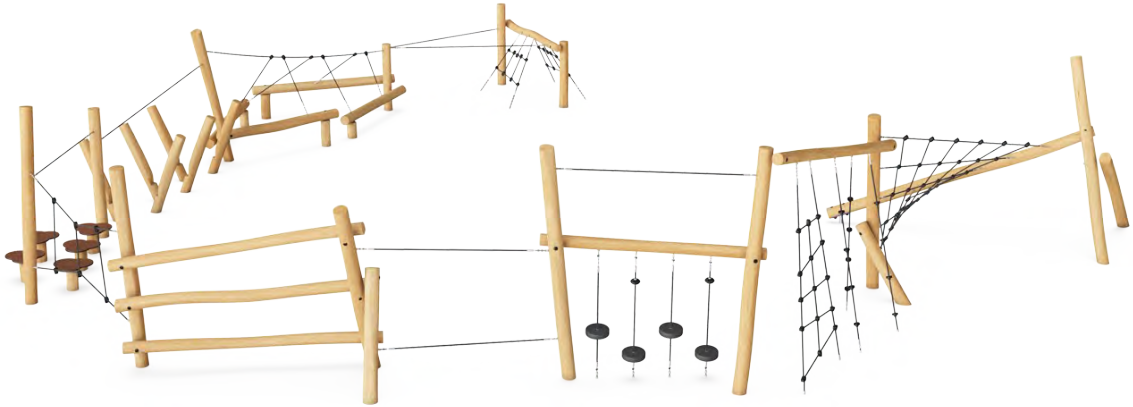

Top beam
Physical: climbing over the top beam demands good spatial awareness and involves risk taking. **Social-Emotional:** great destination for a break with friends.

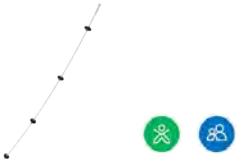

Climbing rope
Physical: the small knots add support for hands and feet when climbing onto the rope, crawling up or down. Climbing supports spatial awareness, cross coordination and muscle strength. **Social-Emotional:** passing others when climbing up or down develops turn-taking skills and consideration.

Parkour ropes
Physical: the big rubbery discs are great support for the feet when climbing or crossing. This trains cross coordination, balance and arm and leg muscles. This combination adds to the child's body adeptness and awareness, adding security to movements. **Social-Emotional:** the seats make a nice destination and meeting point and take cooperation when crossing by others on the way through the module.

Balance ropes
Physical: holding onto the swaying upper rope when balancing on the swaying lower rope makes excellent training of the sense of balance as well as the trunk muscles. These abilities are fundamental for being able to sit still on a chair. **Social-Emotional:** there is room for more than one and cooperating with friends on walking over the swaying ropes is a true cooperative task that takes teamwork and tolerance.

Balance pods
Physical: sense of balance is trained, and bone density built when jumping between and off the pods. **Social-Emotional:** turn-taking and cooperation as well as room for a seated rest with friends.

Stilts
Physical: balancing that supports the vestibular system as well as cross coordination. **Social-Emotional:** cooperation and turn-taking.

Data is subject to change without prior notice.

Parkour 5

NRO857

All Organic Robinia products by KOMPAN are made of Robinia wood from sustainable European sources. On request it can be supplied as FSC® Certified (FSC® C004450).

Nets and ropes are made of UV-stabilized PA with inner steel cable reinforcement. The rope is induction treated in order to create a strong connection between steel and rope which leads to good wear resistance.

Full colored EPDM rubber seats with smooth surface. The seats is are molded on a hot dip galvanized steel inlay that ensures durable fixation to the rope.

Item no. NRO857-1003	
Installation Information	
Max. fall height	6'4"
Safety surfacing area	1743ft²
Total installation time	28.7 hours
Excavation volume	8.7yd³
Concrete volume	1.4yd³
Footing depth (standard)	3'3"
Shipment weight	3615lbs
Anchoring options	In-ground ✔
Warranty Information	
Robinia Wood	10 Years
Stainless steel components	Lifetime
EPDM components	2 Years
Ropes & nets	10 Years
Spare Parts Availability	10 Years

Balance post of ¾" EcoCore™. EcoCore™ is a highly durable, ecofriendly material, which is not only recyclable after use, but also consists of a core produced from +95% recycled post-consumer material from e.g., food packing waste in both core and colorful outer layer.

The Robinia wood can be supplied as untreated raw wood or painted with a brown colored transparent pigment that maintains the golden wood color of the wood.

Elevated activities **0**	Accessible elevated activities	Accessible ground level activities	Accessible ground level play types
Present	**0**	**10**	**2**
Required	**0**	**5**	**2**

Data is subject to change without prior notice.

Sustainability Data

NRO857

Cradle to Gate A1-A3	Total CO_2 emission	CO_2e/kg	Recycled materials
	kg CO_2e	kg CO_2e/kg	%
NRO857-1003	1,041.24	0.73	4.05

The overall framework applied for these factors is the Environmental Product Declaration (EPD), which quantifies "environmental information on the life cycle of a product and enable comparisons between products fulfilling the same function" (ISO, 2006). This follows the structure and applies a Life-Cycle Assessment approach to the entire Product stage from raw material through manufacturing (A1-A3))

Kompan A/S
C.F. Tietgens Boulevard 32C
DK-5220 Odense SØ
Denmark

Validation of CO_2 calculation method
BUREAU VERITAS
HSE Denmark A/S

Verification of CO_2 calculation of: Nature play

Data version no. 2023-10-05

The CO_2 calculation and data are in compliance with the principles of a carbon footprint impact according to the GHG protocol (Greenhouse Gas Protocol), Scope 3, cradle to gate related to all individual components in the product category: "Nature play" represented by item no.: NRO409-0621.

(Scope 3 emissions include emission sources in the upstream and downstream value chain).

Date: 30. October 2023 | Valid until: 30. October 2025
Verified by:

Julie Marie Vejsgaard Larsen, LCA & EPD Consultant

Verification based on report: Validation of CO_2 calculation of 9 categories of Kompan product line, version 1.0, prepared by: Bureau Veritas HSE, Denmark: Julie M. V. Larsen.

Publication date: 30. October 2023

By Bureau Veritas HSE
www.bureauveritas.dk
+45 7731 1000

Data is subject to change without prior notice.

Parkour 5

NRO857

* Max fall height | ** Total height | *** Safety surfacing area	* Max fall height | ** Total height

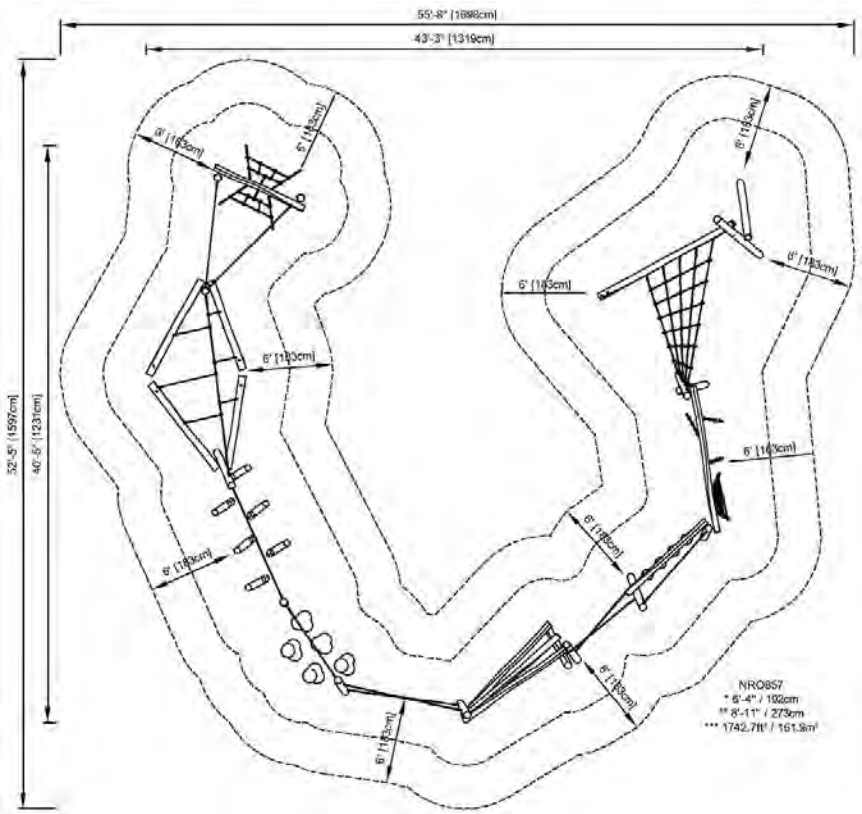

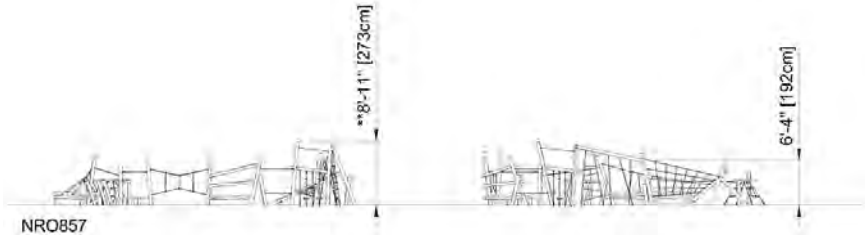

Click to see TOP VIEW	Click to see SIDE VIEW

Data is subject to change without prior notice.

NRO857-1003/FSC
NRO857-1013

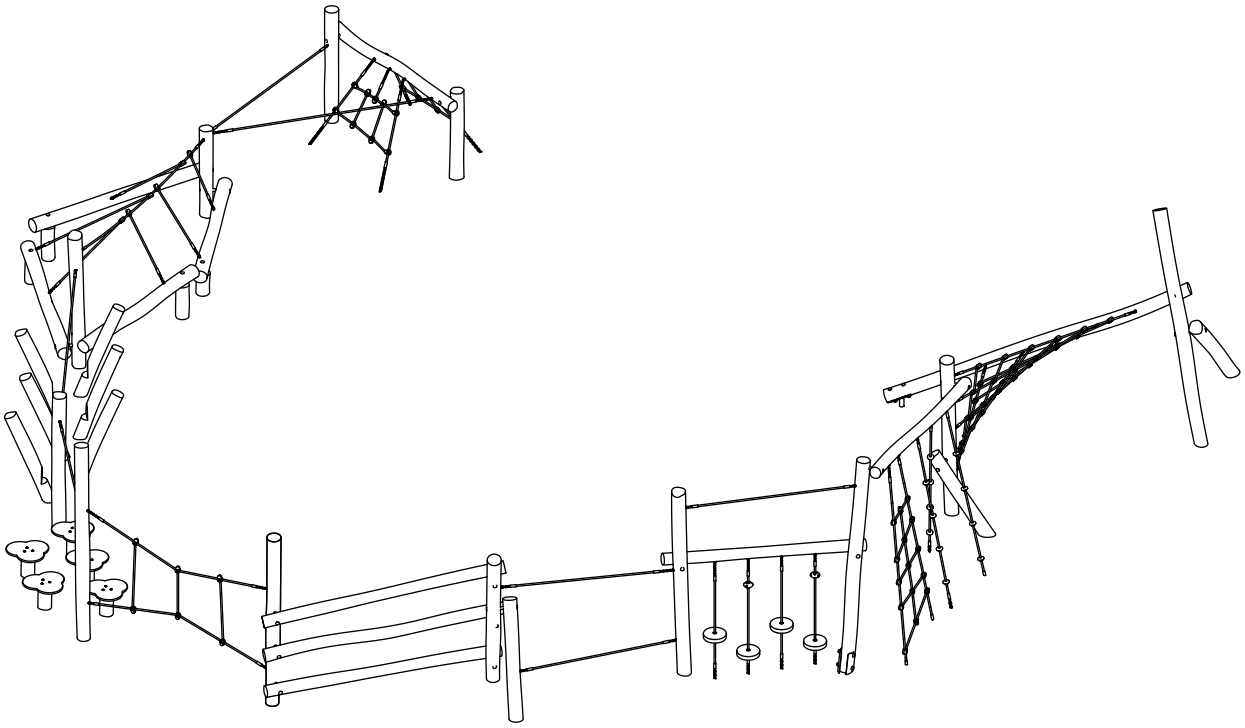

VNRO857 20161031 PetrJu

Copyright©KOMPAN A/S

Safety zone in accordance with ASTM 1487/CSA Z614
Sicherheitsabstand gemäß ASTM 1487/CSA Z614
Espace d'évolution selon ASTM 1487/CSA Z614
Zona de seguridad según ASTM 1487/CSA Z614
Distanze di sicurezza in conformità con lo standard ASTM 1487/CSA Z614
Veiligheidsgebied in overeenstemming met ASTM 1487/CSA Z614
Säkerhetsområde enl ASTM 1487/CSA Z614
Sikkerhedsareal iht. ASTM 1487/CSA Z614
Зона безопасности в соответствии с ASTM 1487/CSA Z614
ASTM 1487/CSA Z614-normin mukainen turva-alue

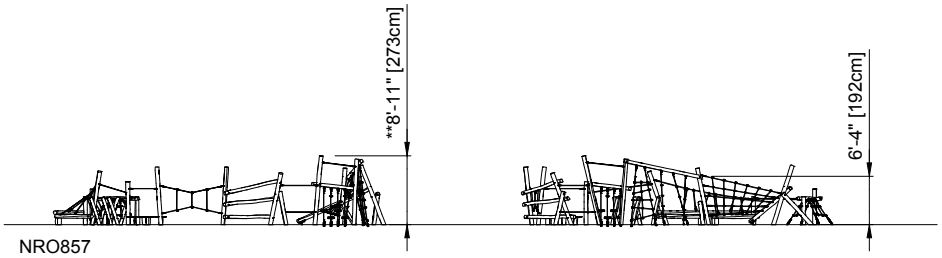

NRO857
1:300

* Free height of fall
Freie Fallhöhe
Hauteur de chute libre
Altura de caída libre
Altezza di caduta libera
Vrije valhoogte
Fri fallhöjd
Fri faldhøjde
Высота свободного падения
Vapaa putoamiskorkeus

Please note: The safety zone shown on this drawing is in accordance with ASTM 1487/CSA Z614. There may be some locations where a larger safety zone is required. If in doubt, please contact your play consultant.

Achtung: Der angegebene Sicherheitsabstand entspricht ASTM 1487/CSA Z614. Bestimmte Länder schreiben größere Sicherheitsabstände vor. Bitte wenden Sie sich in Zweifelsfällen an Ihren Berater.

Attention : l'espace d'évolution montré est conforme à ASTM 1487/CSA Z614. Dans certains pays, un espace d'évolution plus grand peut être exigé. Prière de contacter notre conseiller en cas de doute.

Observe: La zona de seguridad demostrada en este dibujo cumple con ASTM 1487/CSA Z614. En algunos sitios puede ser necesaria una zona de seguridadmás grande. En caso de tener alguna duda, por favor póngase en contacto con nuestro consultor.

Nota: A área de segurança ilustrada neste desenho está de acordo com a ASTM 1487/CSA Z614. Podem existir alguns territórios onde seja exigida uma área de segurança maior. Na dúvida, por favor contacte o seu consultor local da KOMPAN.

Attenzione: la distanza di sicurezza specificata è conforme ai requisiti ASTM 1487/CSA Z614. In alcuni paesi, le norme locali possono richiedere distanze di sicurezza maggiori. In caso di dubbi, contattare il nostro consulente.

N.B.: het getoonde veiligheidsgebied is in overeenstemming met ASTM 1487/CSA Z614. In sommige landen kan een groter veiligheidsgebied vereist zijn. In geval van twijfel onze adviseur raadplegen.

Obs: Det markerade säkerhetsområdet följer ASTM 1487/CSA Z614. I vissa länder kan det finnas krav på större säkerhetsområde. Kontakta vänligen vår konsulent om du är osäker.

Obs.: Det viste sikkerhedsareal er i overensstemmelse med ASTM 1487/CSA Z614. I nogle lande kan der være krav om større sikkerhedsareal. Kontakt venligst vores konsulent ved tvivlsspørgsmål.

Внимание: Зона безопасности указана в соответствии с ASTM 1487/CSA Z614. Возможны случаи, когда требуется увеличение зоны безопасности. В затруднительных случаях обращайтесь к Вашему консультанту.

Huom: Tämän piirustuksen turva-alue on ASTM 1487/CSA Z614-normin mukainen. Joissain sijoituspaikoissa saatetaan edellyttääsuurempaa turva-aluetta. Jos olet epävarma, otathan yhteyttä KOMPANiin.

Copyright©KOMPAN A/S

VNRO857 20161031 PetrJu

Safety zone in accordance with ASTM 1487
Sicherheitsabstand gemäß ASTM 1487
Espace d'évolution selon ASTM 1487
Zona de seguridad según ASTM 1487
Distanze di sicurezza in conformità con lo standard ASTM 1487
Veiligheidsgebied in overeenstemming met ASTM 1487
Säkerhetsområde enl ASTM 1487
Sikkerhedsareal iht. ASTM 1487
Зона безопасности в соответствии с ASTM 1487
ASTM 1487-normin mukainen turva-alue

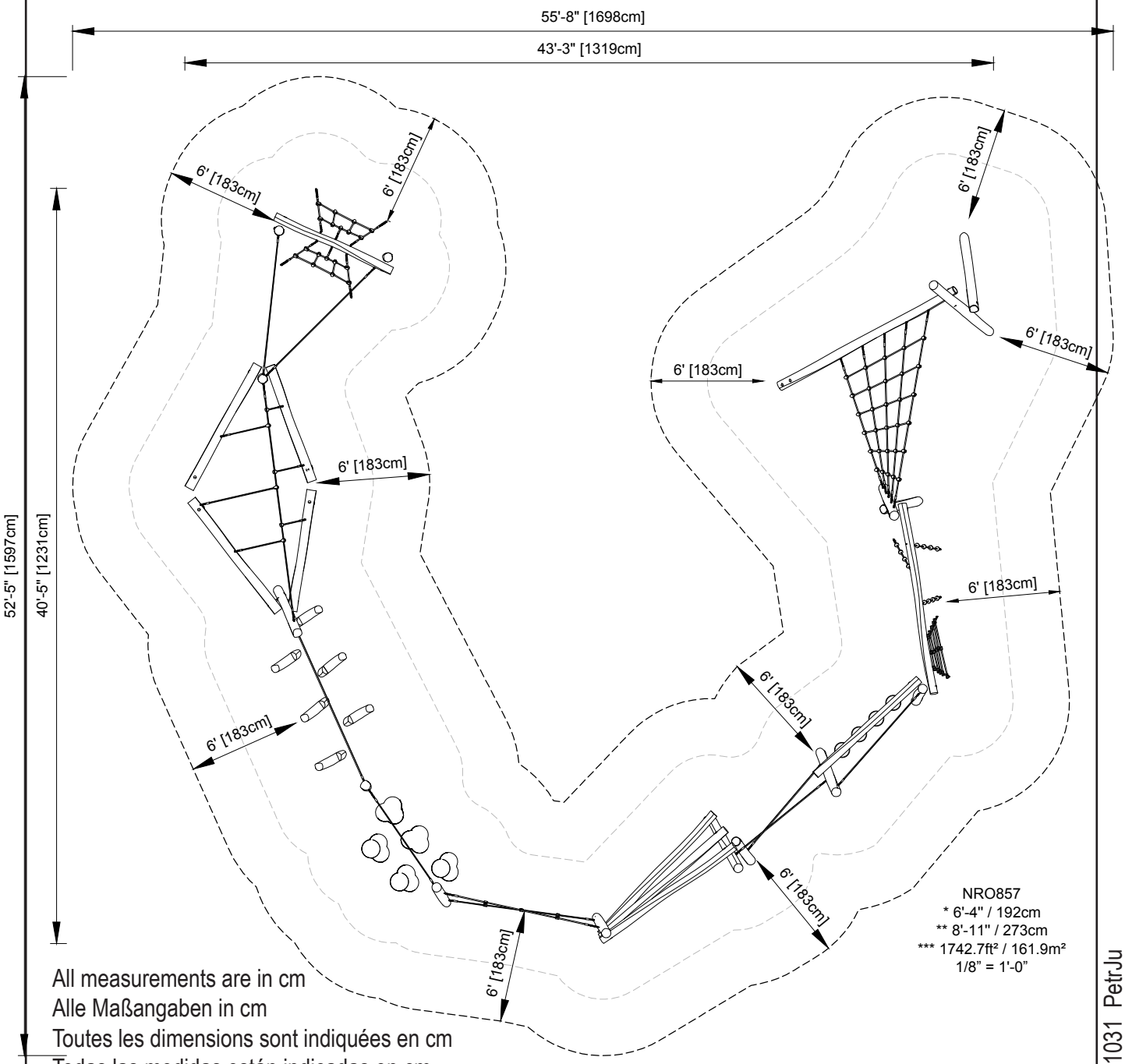

All measurements are in cm
Alle Maßangaben in cm
Toutes les dimensions sont indiquées en cm
Todas las medidas están indicadas en cm
Tutte le misure sono in cm
Alle afmetingen zijn in cm
Alla mått är angivna i cm
Alle mål er angivet i cm
Все измерения в см
Kaikki ohjeessa mainitut mitat ovat senttimetrejä

VNRO857 20161031 PetrJu

Copyright©KOMPAN A/S

Safety zone in accordance with AS4685

NRO857
1:300

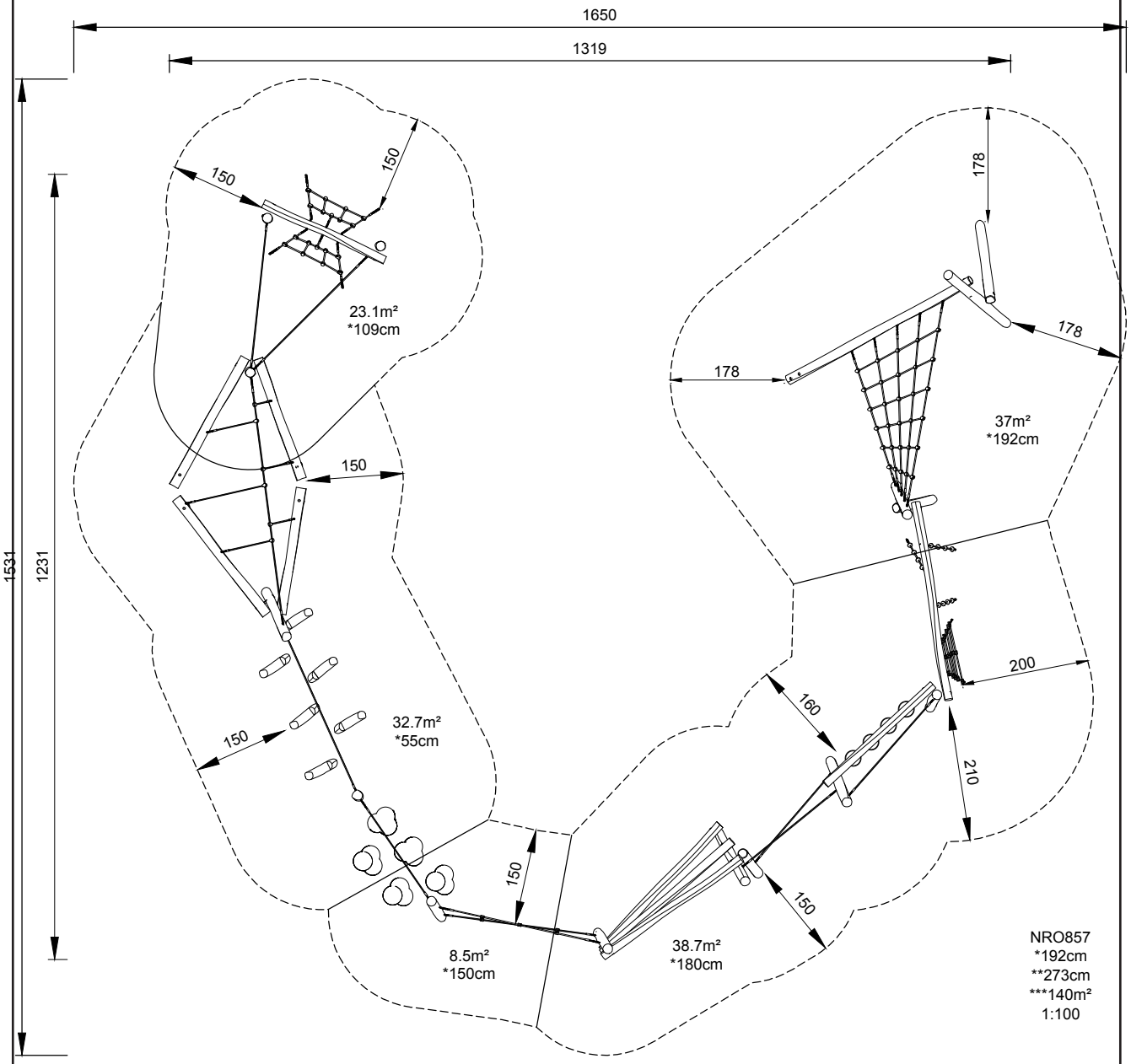

All measurements are in cm

*Free height of fall

Please note: The safety zone shown on this drawing is in accordance with AS4685. There may be some locations where a larger safety zone is required. If in doubt, please contact your play consultant.

VNRO857 20161031 PetrJu

Copyright©KOMPAN A/S

VNRO857 20161031 PetrJu

Copyright©KOMPAN A/S

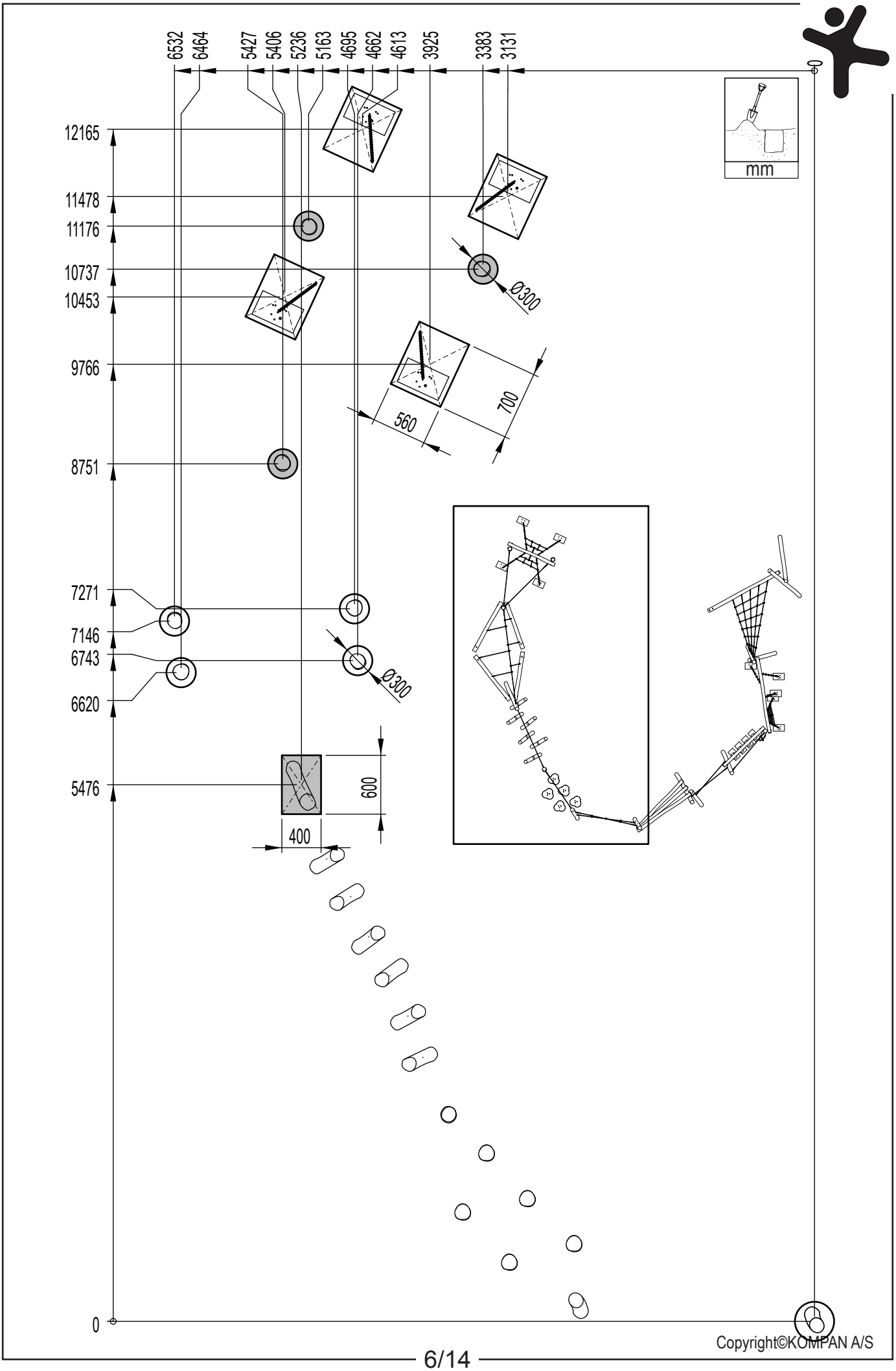

Copyright©KOMPAN A/S

VNRO857 20161031 PetrJu

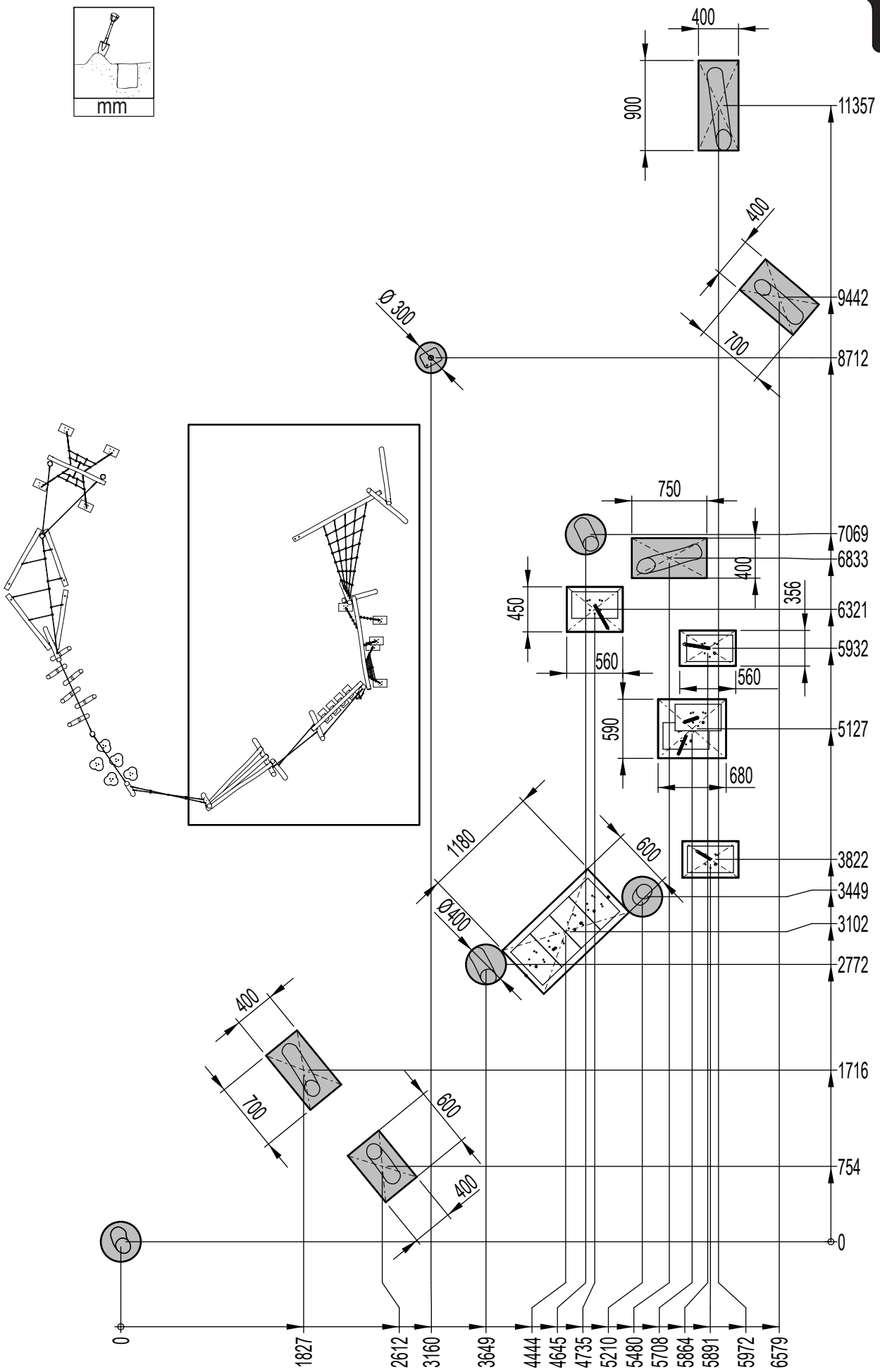

VNRO857 20161031 PetrJu

Copyright©KOMPAN A/S

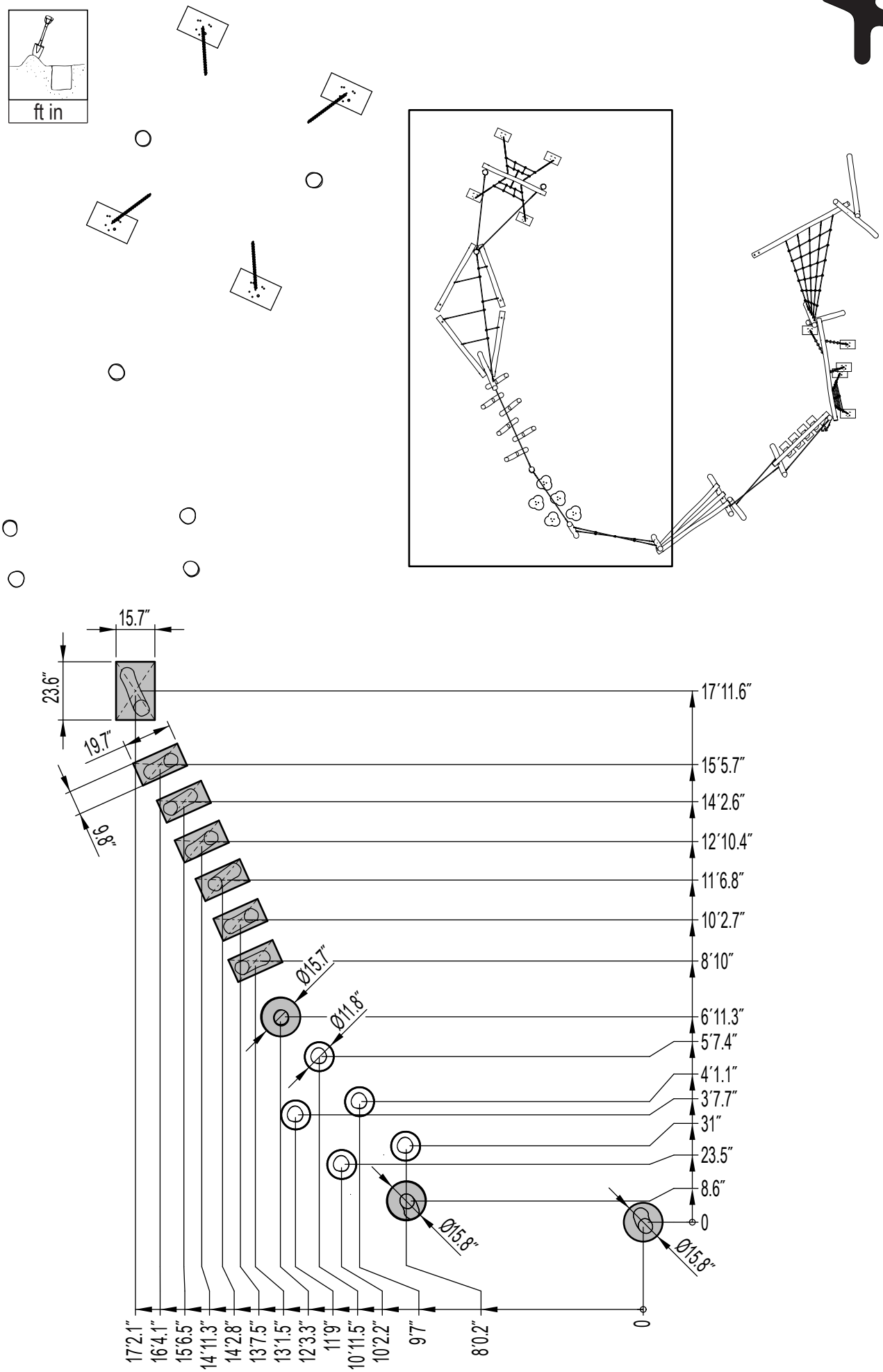

VNRO857 20161031 PetrJu

Copyright©KOMPAN A/S

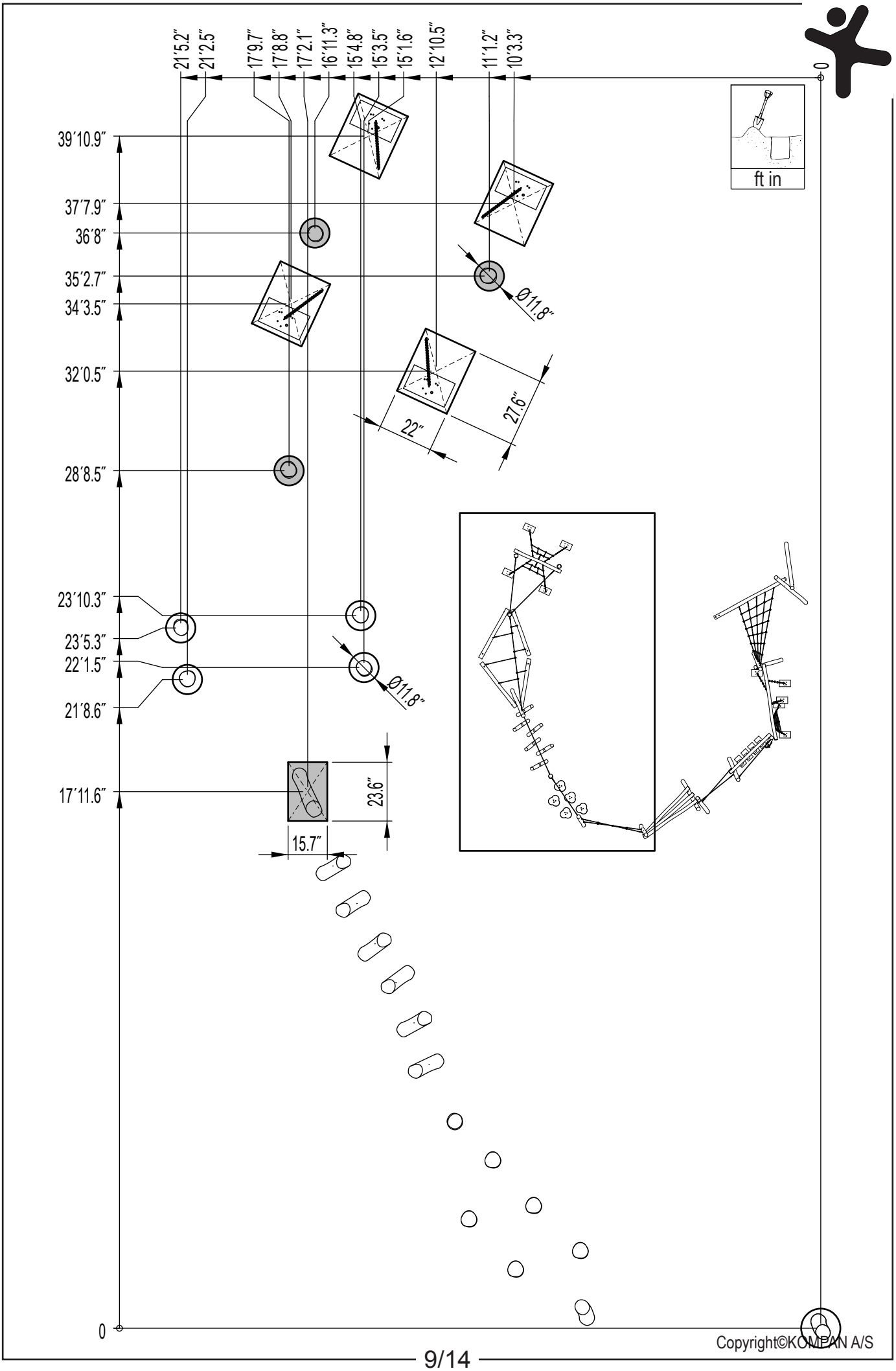

Copyright©KOMPAN A/S

VNRO857 20161031 PetrJu

VNRO857 20161031 PetrJu

Copyright©KOMPAN A/S

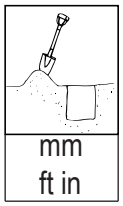

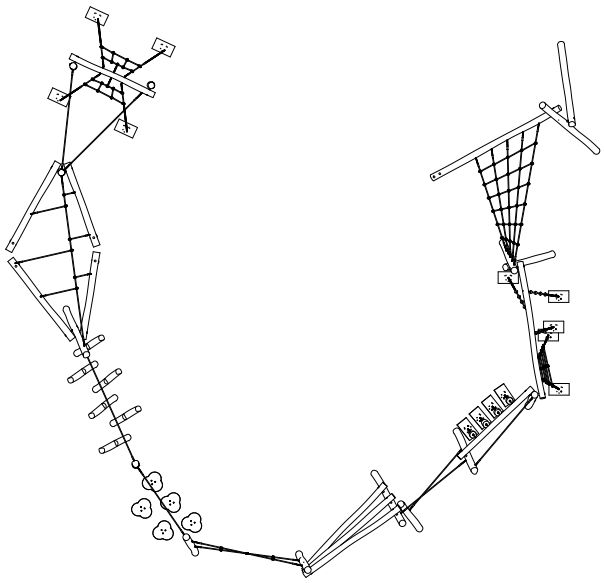

Depth 750 / 29.5″
NO CONCRETE

Depth 1000
3′3.4″

Depth 750 / 29.5″
NO CONCRETE

Depth 1000 / 3′3.4″

Depth 650 / 25.6″ (4x)
NO CONCRETE

Depth 1030
3′4.6″

Depth 626 / 24.6″ (6x)

Depth 1000
3′3.4″

Depth 600 / 23.6″ (5x)
NO CONCRETE

Depth 1010 / 3′3.8″

Depth 785
30.9″

Depth 930
36.6″

Depth 1000
3′3.4″

Depth 1016
3′4″

Depth 886
34.9″

Depth 826 / 32.5″
NO CONCRETE

Depth 960 / 37.8″
NO CONCRETE

Depth 948 / 37.3″
NO CONCRETE

Depth 1015 / 3′4″

Depth 1031
3′4.6″

Depth 1006
3′3.6″

Depth 814 / 32″
NO CONCRETE

Depth 1023 / 3′4.3″

VNRO857 20161031 PetrJu

Copyright©KOMPAN A/S

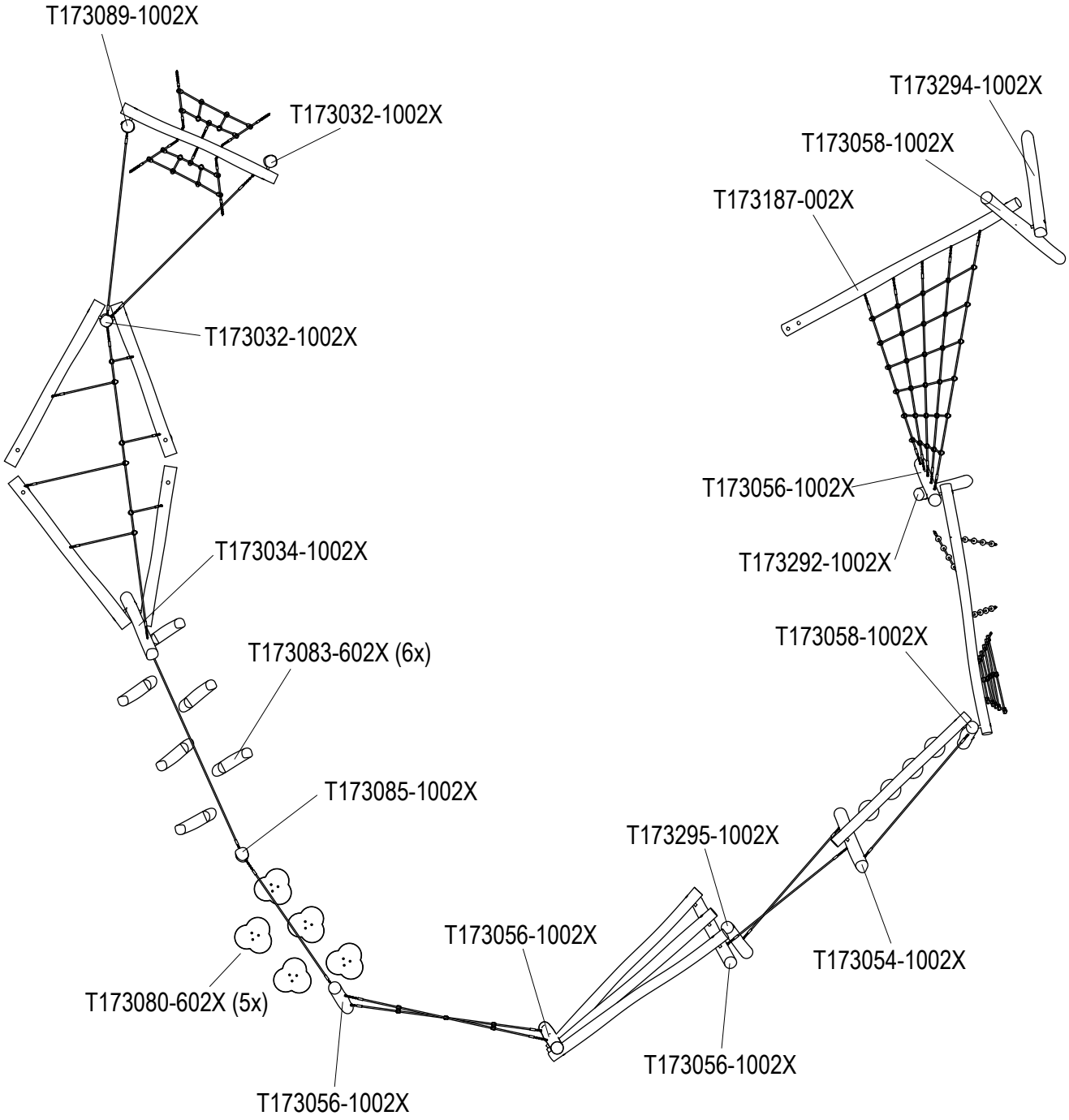

VNRO857 20161031 PetrJu

Copyright©KOMPAN A/S

NRO857-1003/FSC

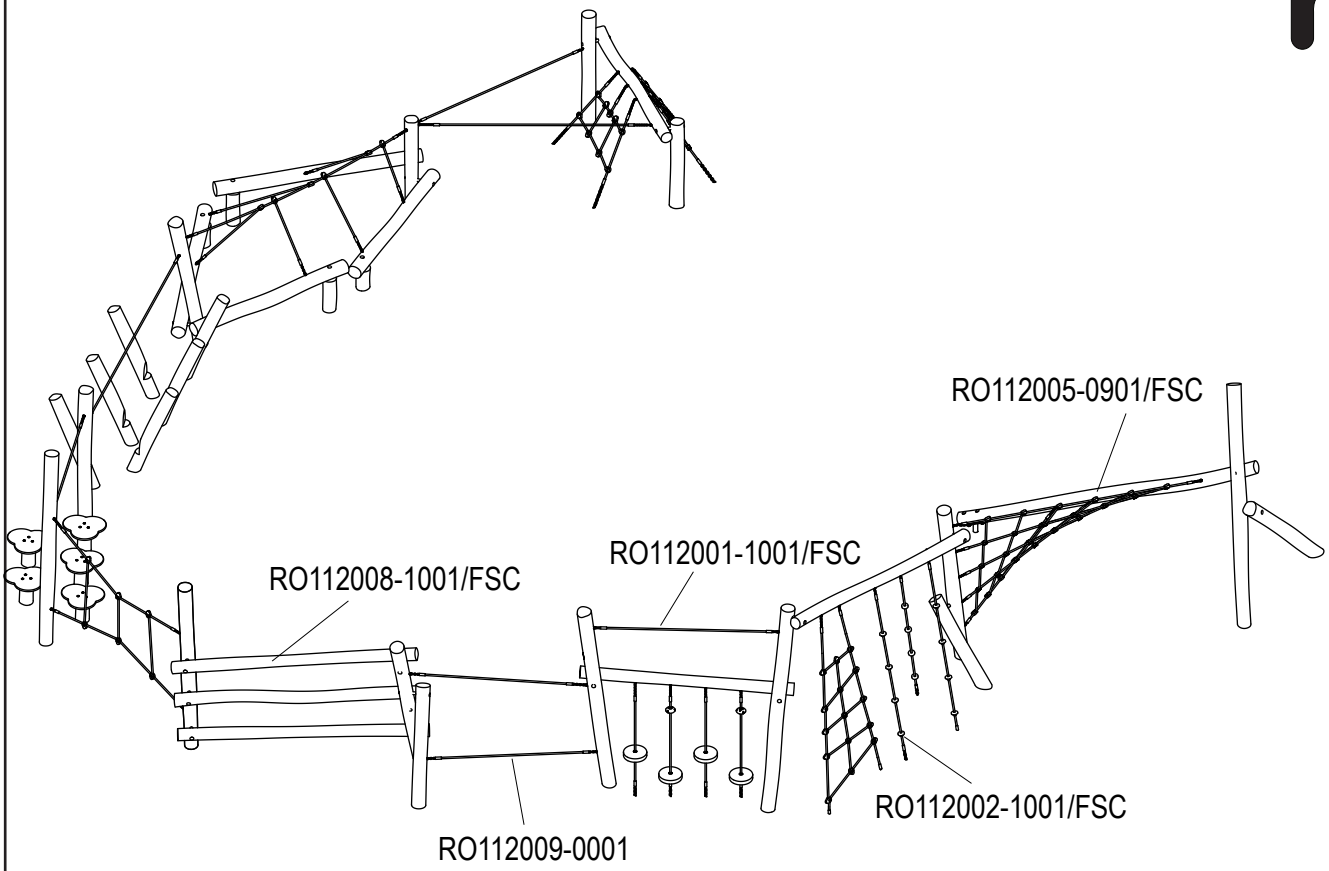

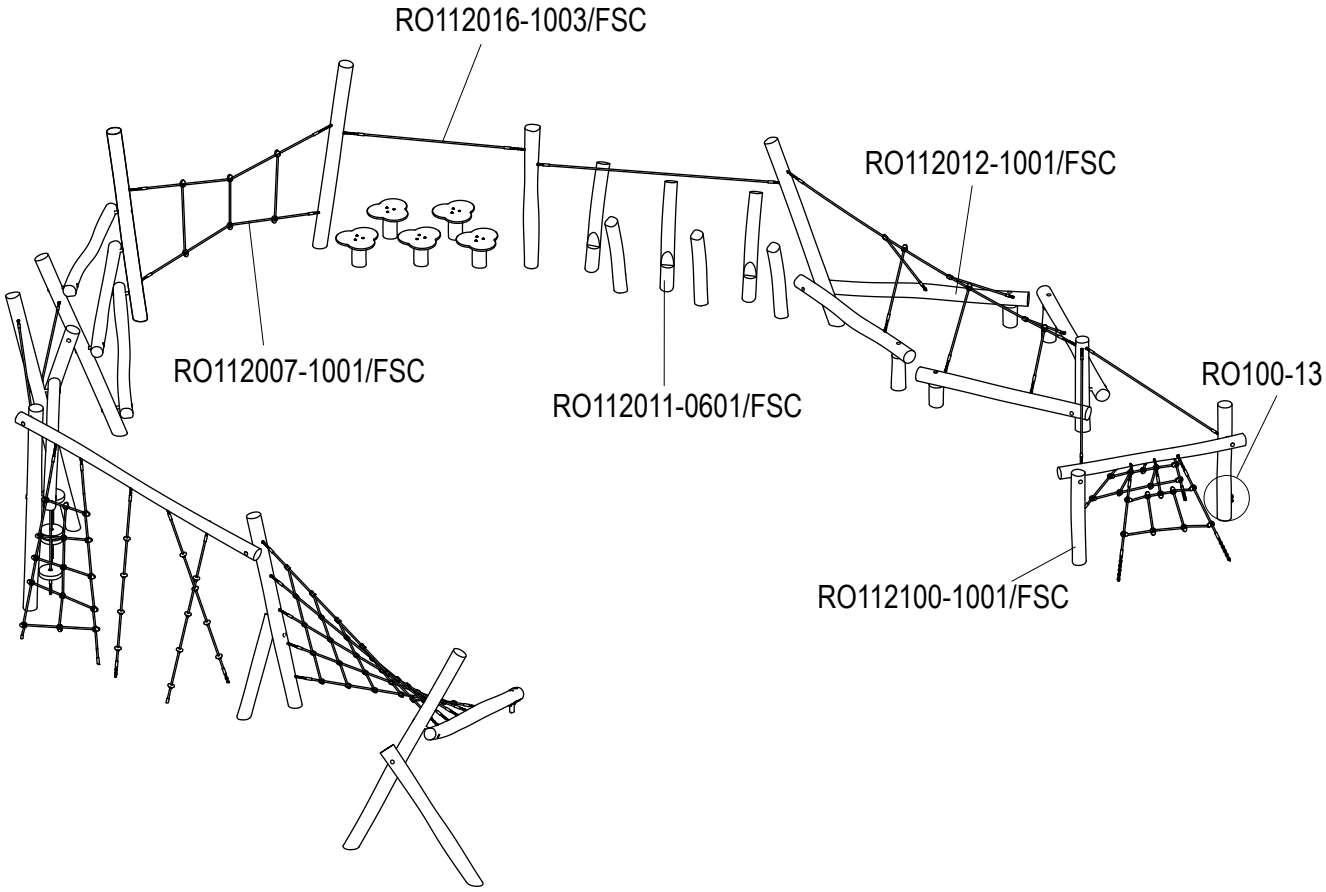

VNRO857 20161031 PetrJu

Copyright©KOMPAN A/S

NRO857-1003

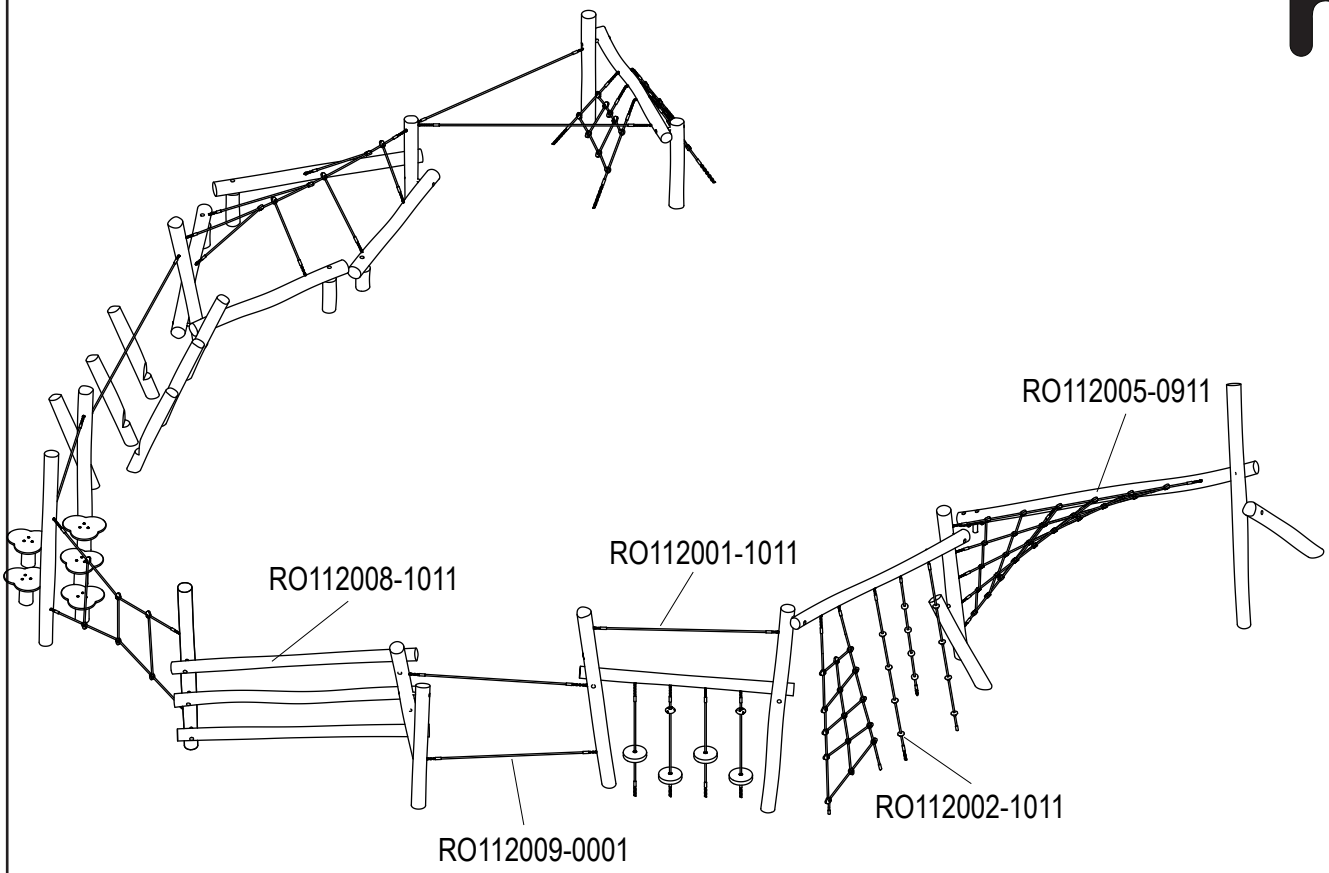

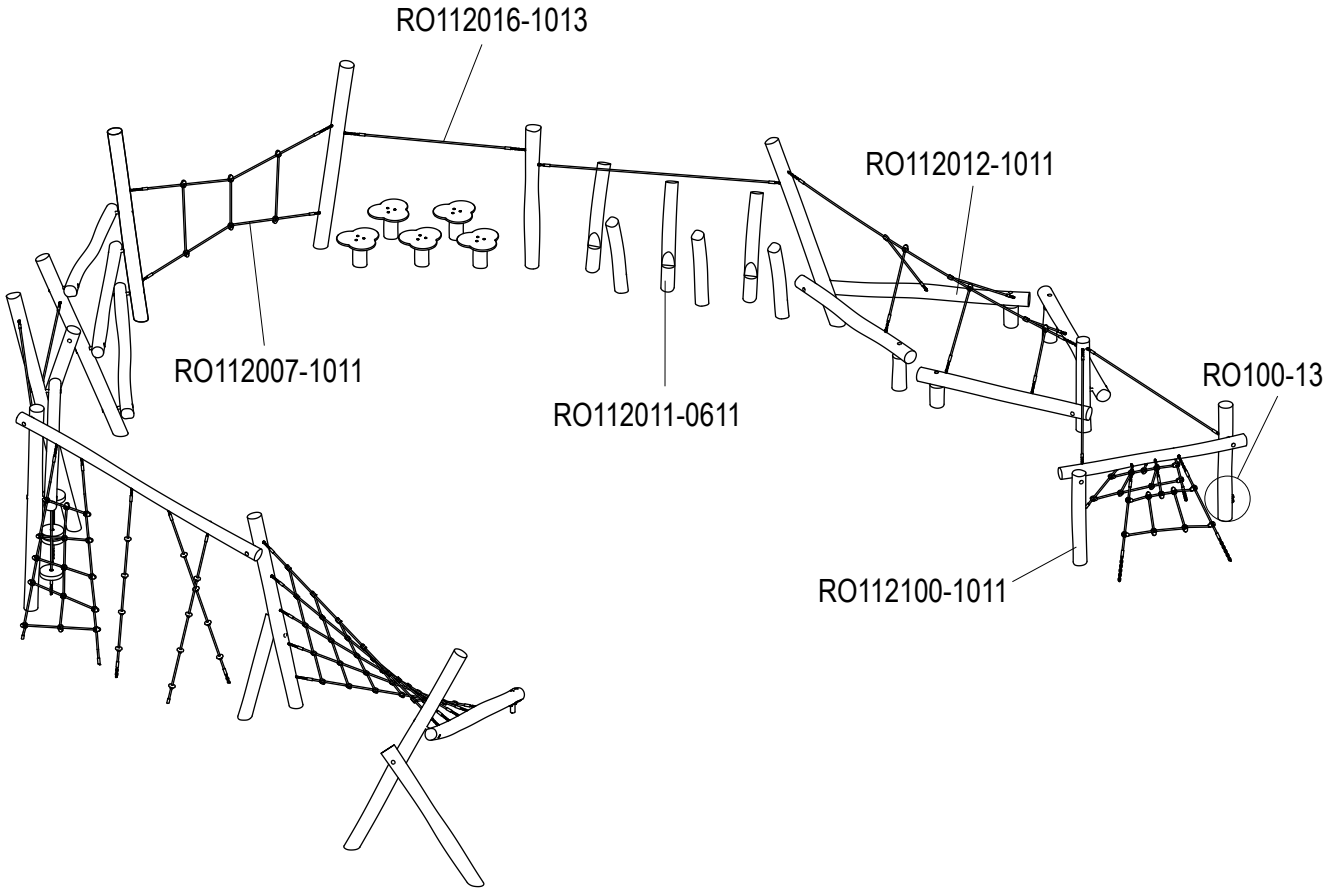

VNRO857 20161031 PetrJu

Copyright©KOMPAN A/S

Birds Nest Swing

NRO911

Item no. NRO911-1101	
General Product Information	
Dimensions LxWxH	13'7"x6'9"x9'4"
Age group	2 - 12
Play capacity (users)	7
Color options	

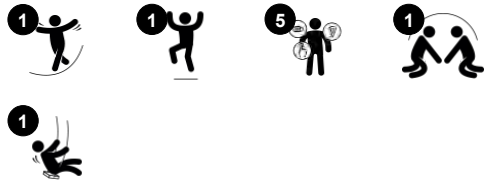

Of all the play activities, the Bird's Nest Swing is a strong favorite: children love it, and it can be done individually and together. It is a great facilitator of fun rough-and-tumble play. The seat allows for multiple users of all abilities and most ages and makes it a thrilling, swinging experience, day after day, for hours and hours. Swinging, apart from being tremendous fun, trains the children's ABCs: agility, balance and coordination, as well as their spatial awareness. These motor skills are crucial to being able to judge distance and navigate spaces safely. Swings allow for standing, sitting, lying – and not least, jumping off. All of these activities train the arm, leg and core muscles. The jumping off strengthens bone density – the majority of which is built up during the first years of life. Finally, this swing supports social skills such as taking turns and cooperation.

Data is subject to change without prior notice.

Birds Nest Swing

NRO911

Bird nest swing
Physical: develops balance, coordination and spatial awareness. The swinging movement trains the arm, leg and core muscles, and strengthens bone density when jumping off. **Social-Emotional:** the spacious seat allows for many children standing, lying, seated together and is inclusive for all. **Cognitive:** cause and effect understanding, rhythm and thinking skills are developed in younger children.

Data is subject to change without prior notice.

Birds Nest Swing

NRO911

All Organic Robinia products by KOMPAN are made of Robinia wood from sustainable European sources. On request it can be supplied as FSC® Certified (FSC® C004450).

KOMPAN designed the bird's nest seats to be light in weight and in compliance with global safety standards. The soft, shock absorbent bumpers with non-slip surface makes the swing seat extremely user friendly. Choose between a rope version with reinforced PA rope or a molded PE version. Both equipped with soft rubber bumpers.

Swing hangers for Robinia wood crossbeams are made of stainless steel brackets and can move over two axis. The flange bearings are silicone enriched to make the suspension maintenance free.

Item no. NRO911-1101	
Installation Information	
Max. fall height	7'7"
Safety surfacing area	544ft²
Total installation time	6.5 hours
Excavation volume	1.46yd³
Concrete volume	0.42yd³
Footing depth (standard)	3'8"
Shipment weight	989lbs
Anchoring options	In-ground ✔
Warranty Information	
Robinia Wood	10 Years
Stainless steel components	Lifetime
Chains	10 Years
Spare Parts Availability	10 Years

The Robinia wood can be supplied as untreated raw wood or painted with a brown colored transparent pigment that maintains the golden wood color of the wood.

Elevated activities **0**	Accessible elevated activities	Accessible ground level activities	Accessible ground level play types
Present	**0**	**1**	**1**
Required	**0**	**1**	**1**

Data is subject to change without prior notice.

Sustainability Data

NRO911

Cradle to Gate A1-A3	Total CO_2 emission	CO_2e/kg	Recycled materials
	kg CO_2e	kg CO_2e/kg	%
NRO911-1101	325.67	0.92	3.08

The overall framework applied for these factors is the Environmental Product Declaration (EPD), which quantifies "environmental information on the life cycle of a product and enable comparisons between products fulfilling the same function" (ISO, 2006). This follows the structure and applies a Life-Cycle Assessment approach to the entire Product stage from raw material through manufacturing (A1-A3))

Kompan A/S
C.F. Tietgens Boulevard 32C
DK-5220 Odense SØ
Denmark

Validation of CO_2 calculation method
BUREAU VERITAS
HSE Denmark A/S

Verification of CO_2 calculation of: Nature play

Data version no. 2023-10-05

The CO_2 calculation and data are in compliance with the principles of a carbon footprint impact according to the GHG protocol (Greenhouse Gas Protocol), Scope 3, cradle to gate related to all individual components in the product category: "Nature play" represented by item no.: NRO409-0621.

(Scope 3 emissions include emission sources in the upstream and downstream value chain).

Date: 30. October 2023 | Valid until: 30. October 2025
Verified by:

Julie Marie Vejsgaard Larsen, LCA & EPD Consultant

Verification based on report: Validation of CO_2 calculation of 9 categories of Kompan product line, version 1.0, prepared by: Bureau Veritas HSE, Denmark: Julie M. V. Larsen.

Publication date: 30. October 2023

By Bureau Veritas HSE
www.bureauveritas.dk
+45 7731 1000

Data is subject to change without prior notice.

Birds Nest Swing

NRO911

* Max fall height | ** Total height | *** Safety surfacing area

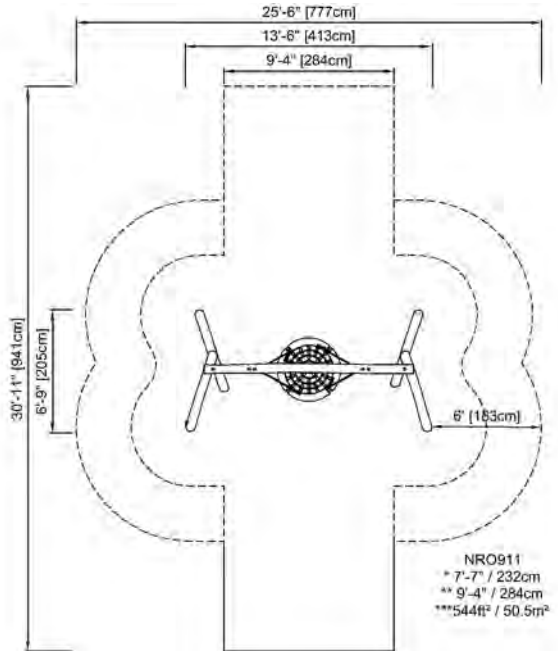

Click to see TOP VIEW

* Max fall height | ** Total height

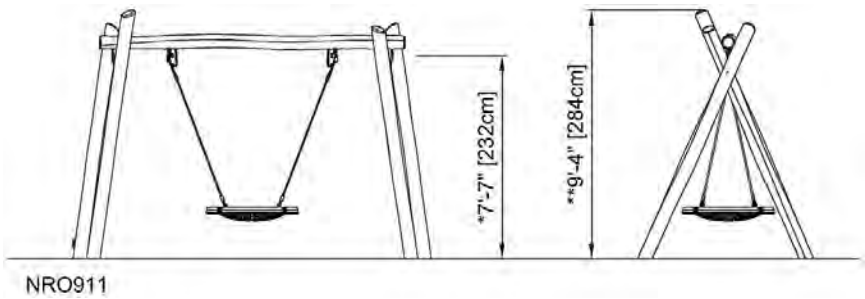

Click to see SIDE VIEW

Data is subject to change without prior notice.

KOMPAN®

NRO911-1101/FSC
NRO911-1111/FSC

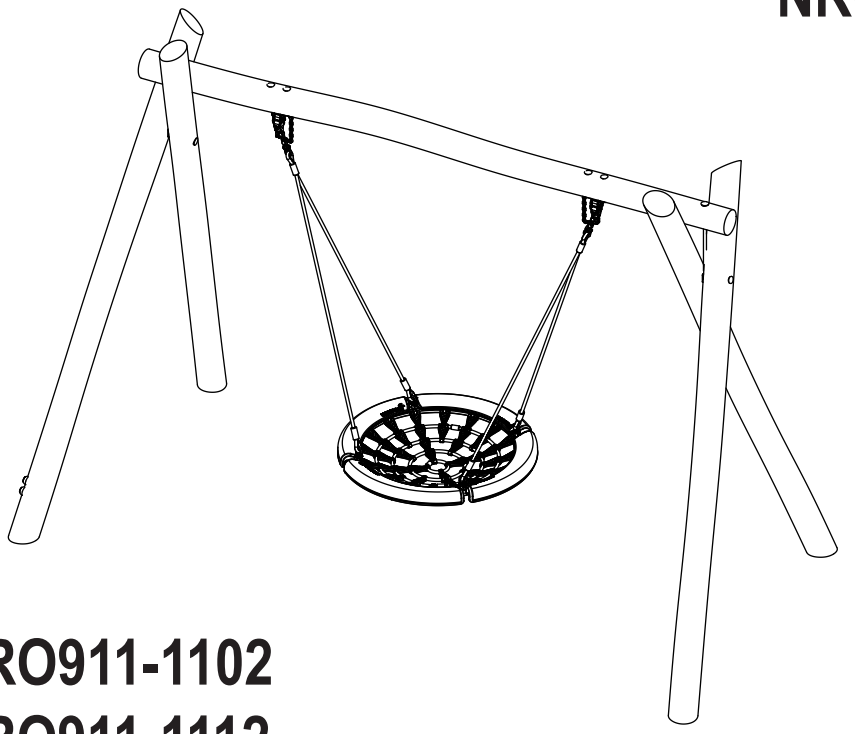

NRO911-1102
NRO911-1112

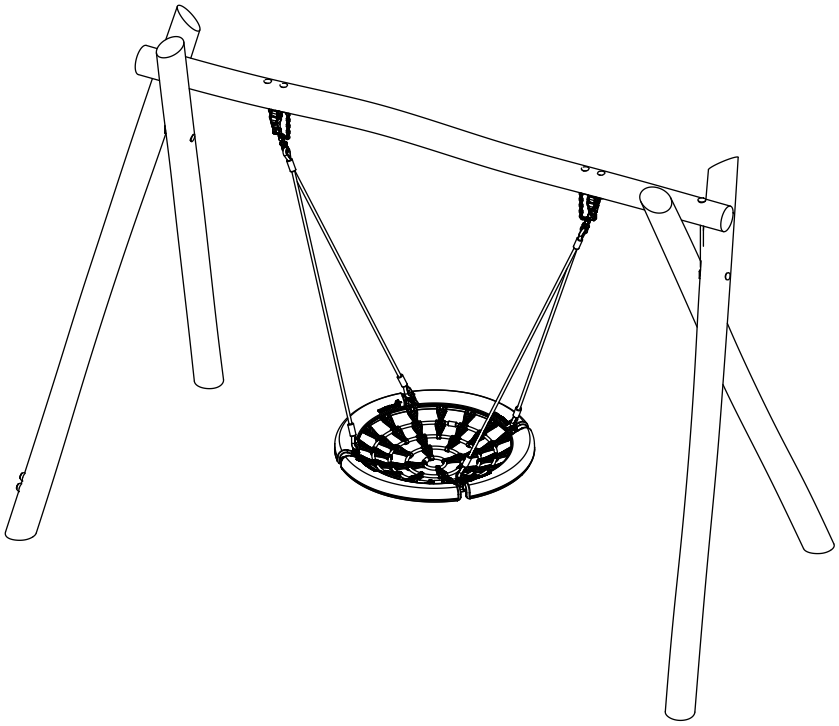

VNRO911XXXX 20160331 PetrJu

Copyright©KOMPAN A/S

Safety zone in accordance with ASTM 1487/CSA Z614
Sicherheitsabstand gemäß ASTM 1487/CSA Z614
Espace d'évolution selon ASTM 1487/CSA Z614
Zona de seguridad según ASTM 1487/CSA Z614
Distanze di sicurezza in conformità con lo standard ASTM 1487/CSA Z614
Veiligheidsgebied in overeenstemming met ASTM 1487/CSA Z614
Säkerhetsområde enl ASTM 1487/CSA Z614
Sikkerhedsareal iht. ASTM 1487/CSA Z614
Зона безопасности в соответствии с ASTM 1487/CSA Z614
ASTM 1487/CSA Z614-normin mukainen turva-alue

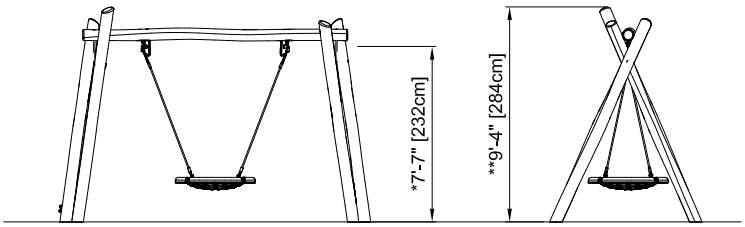

NRO911
1:100

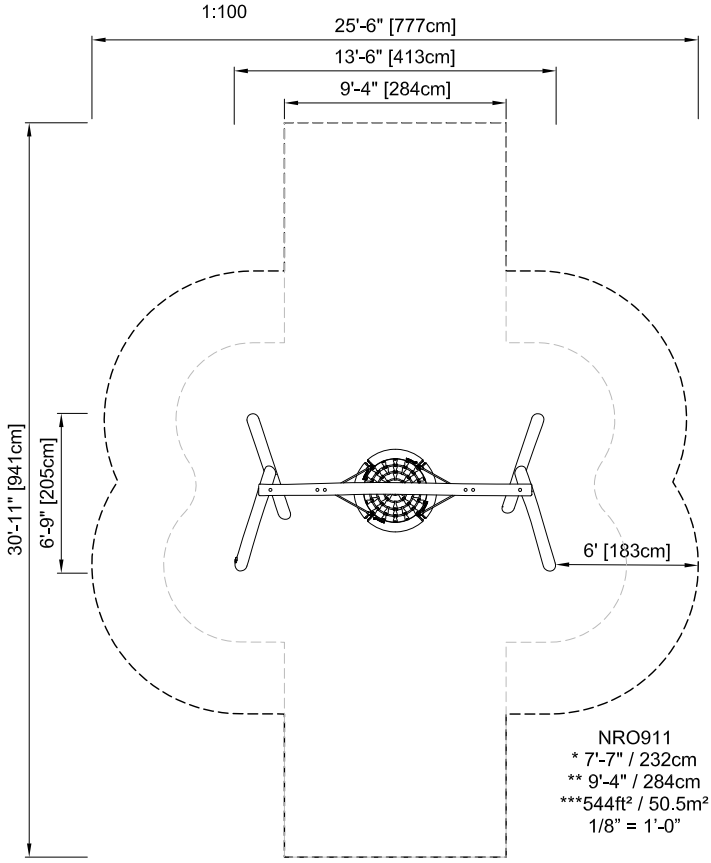

* Free height of fall
Freie Fallhöhe
Hauteur de chute libre
Altura de caída libre
Altezza di caduta libera
Vrije valhoogte
Fri fallhöjd
Fri faldhøjde
Высота свободного падения
Vapaa putoamiskorkeus

NRO911
* 7'-7" / 232cm
** 9'-4" / 284cm
***544ft² / 50.5m²
1/8" = 1'-0"

Please note: The safety zone shown on this drawing is in accordance with ASTM 1487/CSA Z614. There may be some locations where a larger safety zone is required. If in doubt, please contact your play consultant.

Achtung: Der angegebene Sicherheitsabstand entspricht ASTM 1487/CSA Z614. Bestimmte Länder schreiben größere Sicherheitsabstände vor. Bitte wenden Sie sich in Zweifelsfällen an Ihren Berater.

Attention : l'espace d'évolution montré est conforme à ASTM 1487/CSA Z614. Dans certains pays, un espace d'évolution plus grand peut être exigé. Prière de contacter notre conseiller en cas de doute.

Observe: La zona de seguridad demostrada en este dibujo cumple con ASTM 1487/CSA Z614. En algunos sitios puede ser necesaria una zona de seguridad más grande. En caso de tener alguna duda, por favor póngase en contacto con nuestro consultor.

Attenzione: la distanza di sicurezza specificata è conforme ai requisiti ASTM 1487/CSA Z614. In alcuni paesi, le norme locali possono richiedere distanze di sicurezza maggiori. In caso di dubbi, contattare il nostro consulente.

N.B.: het getoonde veiligheidsgebied is in overeenstemming met ASTM 1487/CSA Z614. In sommige landen kan een groter veiligheidsgebied vereist zijn. In geval van twijfel onze adviseur raadplegen.

Obs: Det markerade säkerhetsområdet följer ASTM 1487/CSA Z614. I vissa länder kan det finnas krav på större säkerhetsområde. Kontakta vänligen vår konsulent om du är osäker.

Obs.: Det viste sikkerhedsareal er i overensstemmelse med ASTM 1487/CSA Z614. I nogle lande kan der være krav om større sikkerhedsareal. Kontakt venligst vores konsulent ved tvivlsspørgsmål.

Внимание: Зона безопасности указана в соответствии с ASTM 1487/CSA Z614. Возможны случаи, когда требуется увеличение зоны безопасности. В затруднительных случаях обращайтесь к Вашему консультанту.

Huom: Tämän piirustuksen turva-alue on ASTM 1487/CSA Z614-normin mukainen. Joissain sijoituspaikoissa saatetaan edellyttää suurempaa turva-aluetta. Jos olet epävarma, otathan yhteyttä KOMPANiin.

Copyright©KOMPAN A/S

VNRO911XXXX 20160331 PetrJu

NRO911-1101/FSC
NRO911-1102
NRO911-1111/FSC
NRO911-1112

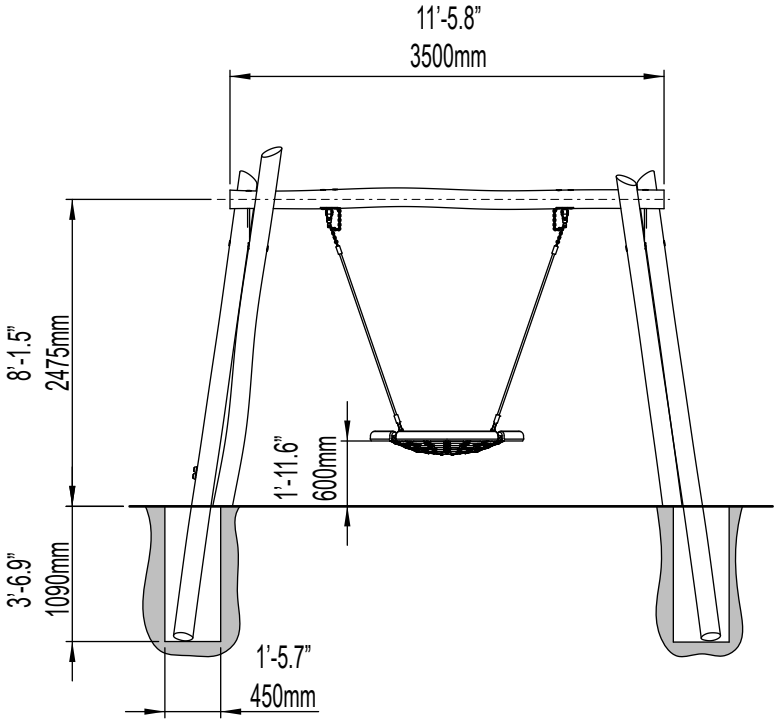

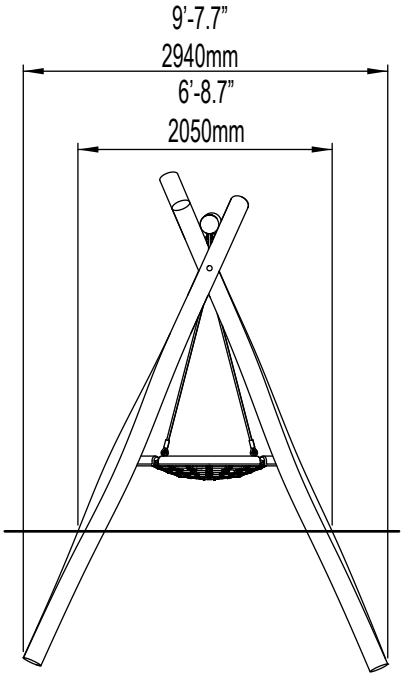

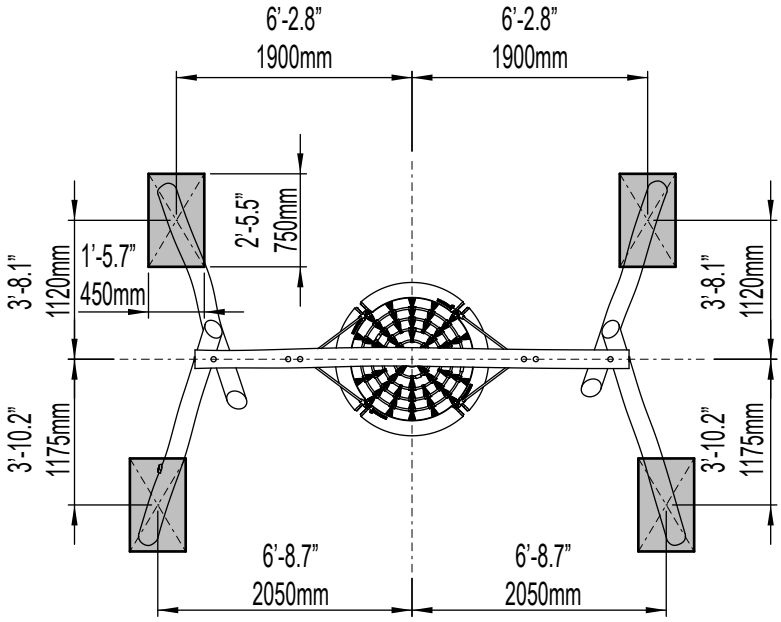

VNRO911XXXX 20160331 PetrJu

Copyright©KOMPAN A/S

Important! The concrete must be sufficiently hardened before the play item may be used.
Total volume of concrete: Min 0,320 m³

Wichtig! Vor der Inbetriebnahme des Spielreräts muß der Beton ausreichend abgebunden haben.
Betonverbrauch insgesamt: mind. 0,320 m³

Important! Le béton doit avoir suffisamment durci avant de mettre en service l'équipment de jeux.
Consommation totale de bèton: au minimum 0,320 m³

Importante! El hormigón debe estar suficentemente endurecido antes de comenzar a utilizar el equipo de juego. Consumo total de hormigón: Min. 0,320 m³

Importante! Prima de utilizzare le attrezzature da gioco, il cemento dve essere sufficientemente solidificato. Volume totale di cemento: min. 0,320 m³

Belangrijk! Het beton moet voldoende gehard zijn voordat het speeltoestel in gebruik wordt genomen.
Totale benodigde hoeveelheid beton: min. 0,320 m³

Viktigt! Betongen måste ha härdat tillräckligt innan lekredskapet börjar användas.
Total betongåtgång: min. 0,320 m³

Vigtigt! Betonen skal være tilstrækkeligt hærdet, før legeredskabet tages i brug.
Totalt betonforbrug: Min. 0,320 m³

Важно! Перед использованием сооружений убедитесь, что бетон затвердел.
Сумарный объем бетона: мин. 320 л.

HUOM! Betonivalun on oltava tarpeeksi kuiva, ennen kuin leikkivälinettä saa käyttää.
Betonoinnin minimikokonaismäärä; 0,320 m³

NRO911-1101/FSC
NRO911-1111/FSC
NRO911-1102
NRO911-1112

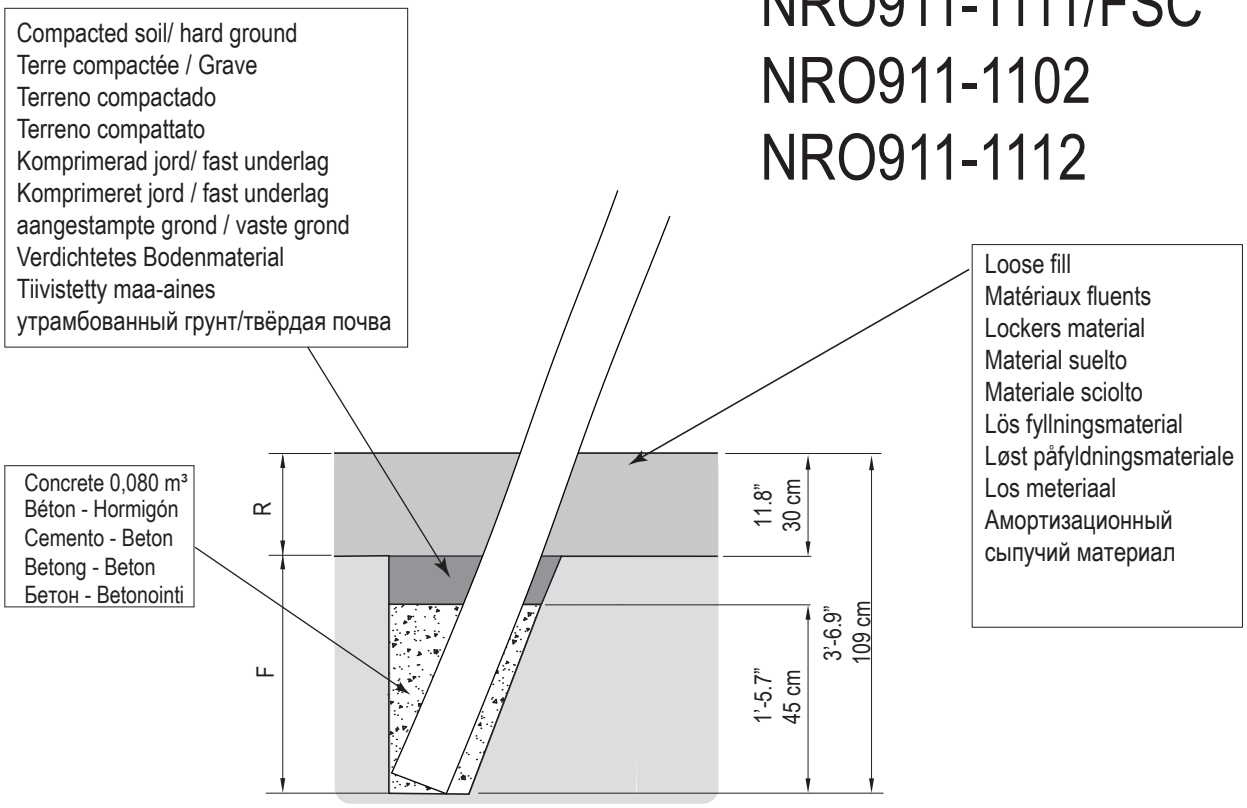

R + F = 109 cm/3'-6.9"

VNRO911XXXX 20160331 PetrJu

Copyright©KOMPAN A/S

NRO911-1101/FSC – NRO911-1102
NRO911-1111/FSC NRO911-1112

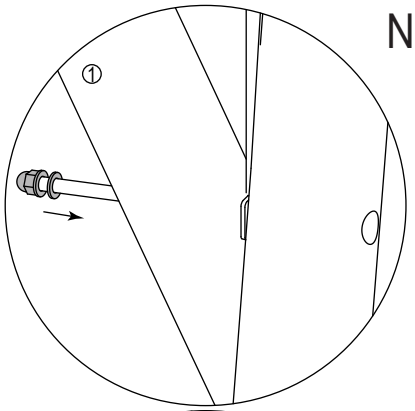

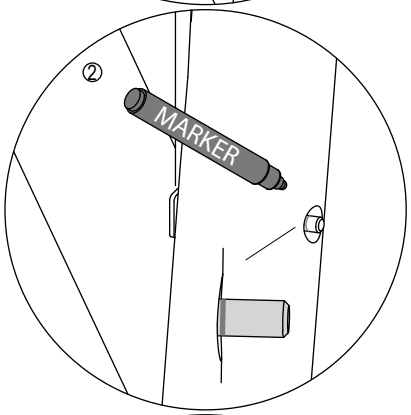

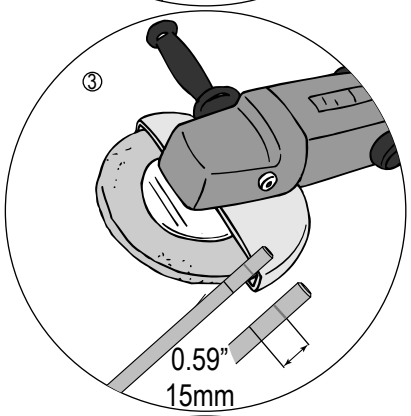

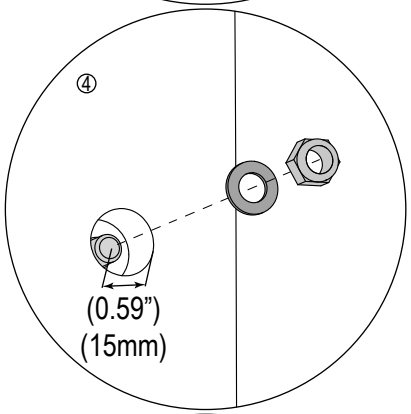

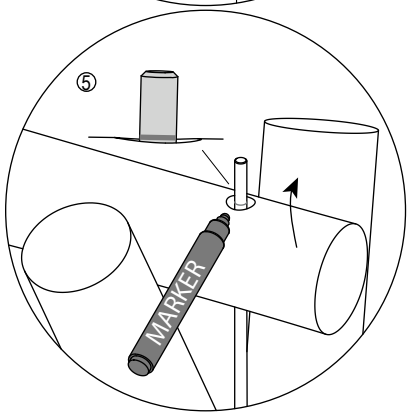

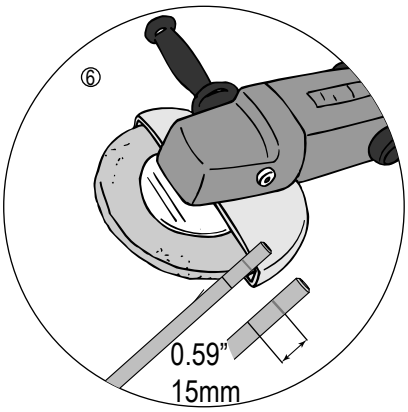

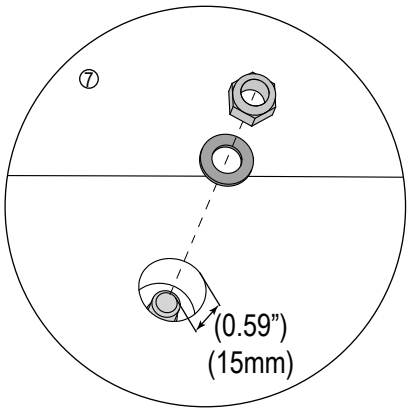

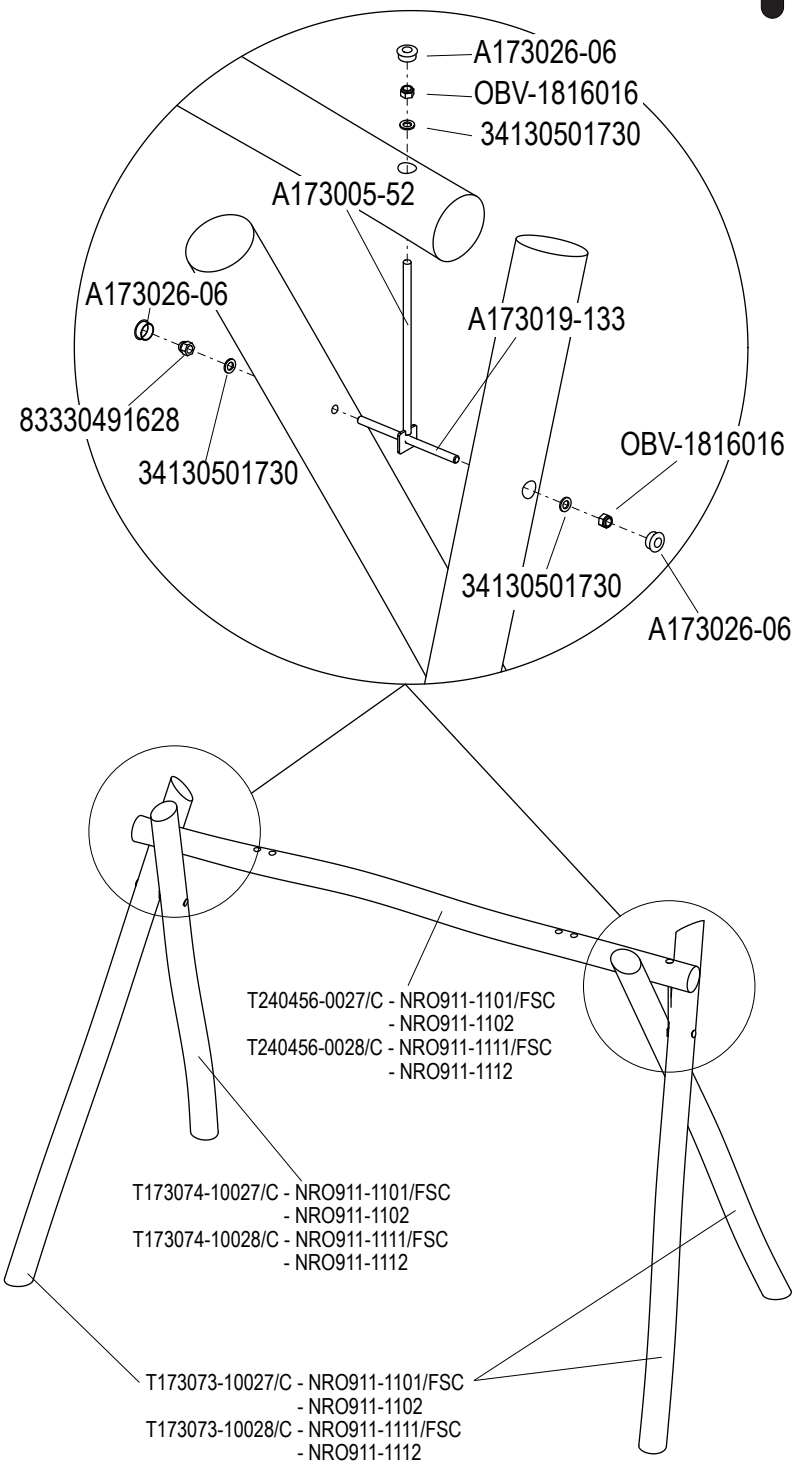

VNRO911XXXX 20160331 PetrJu

Copyright©KOMPAN A/S

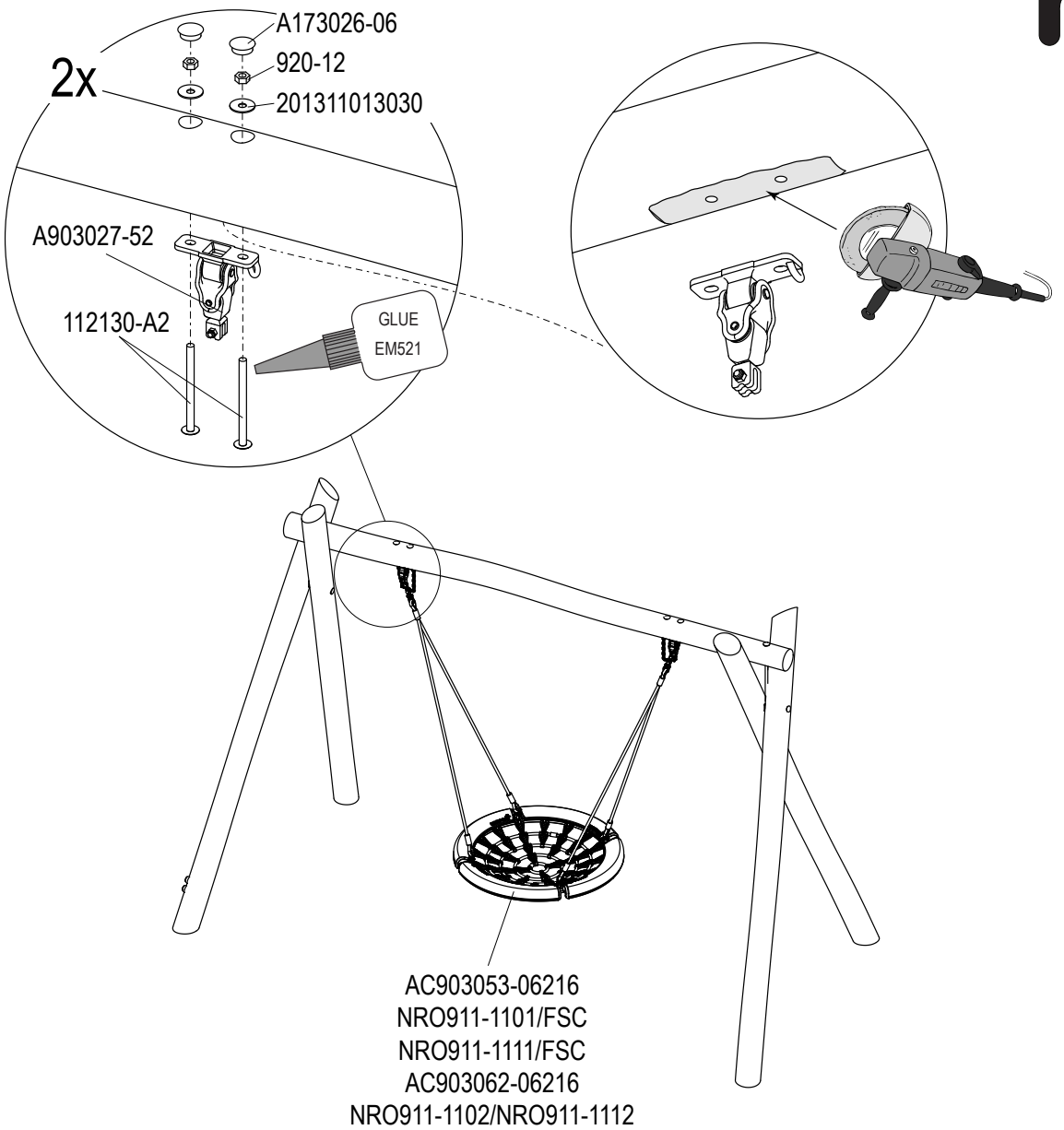

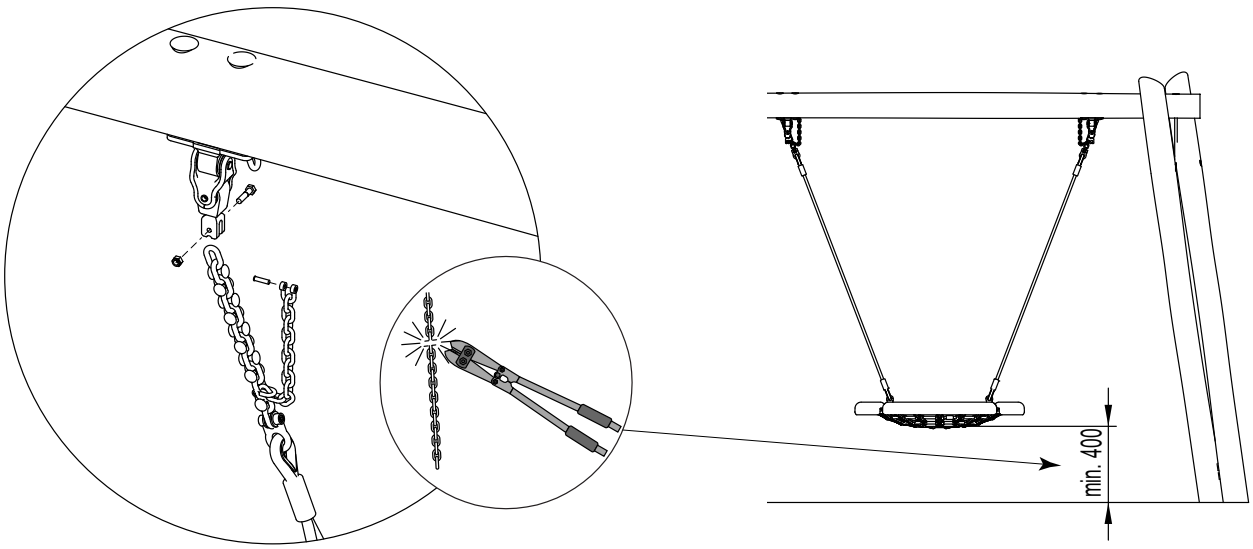

VNRO911XXXX 20160331 PetrJu

Copyright©KOMPAN A/S

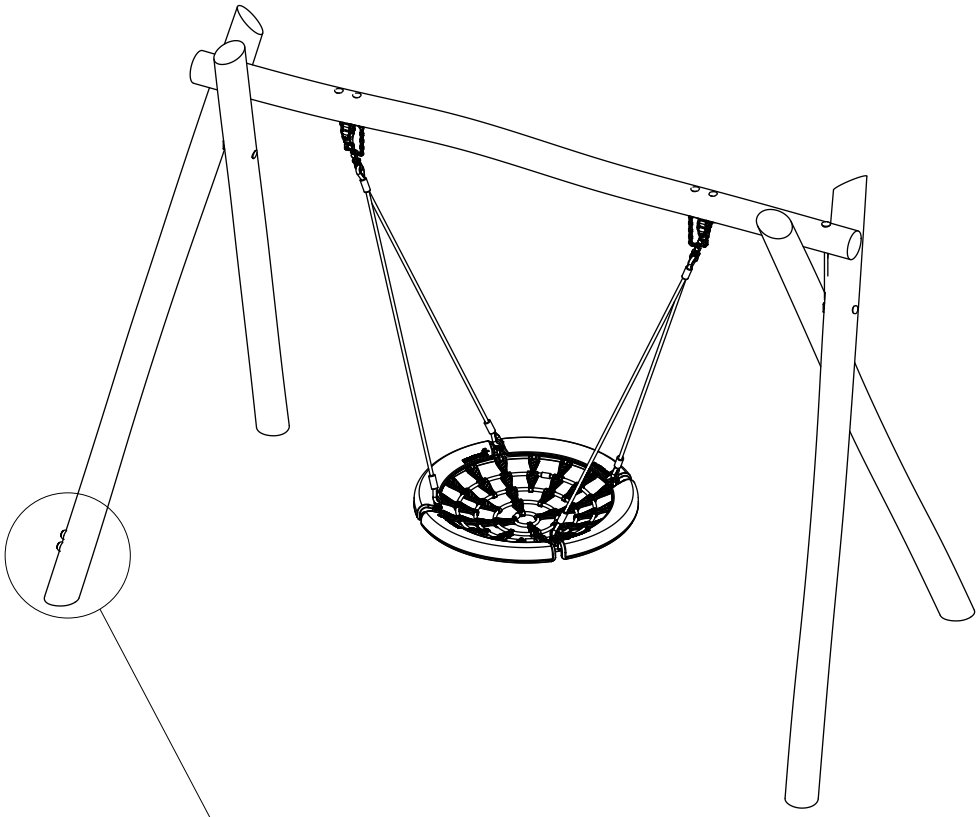

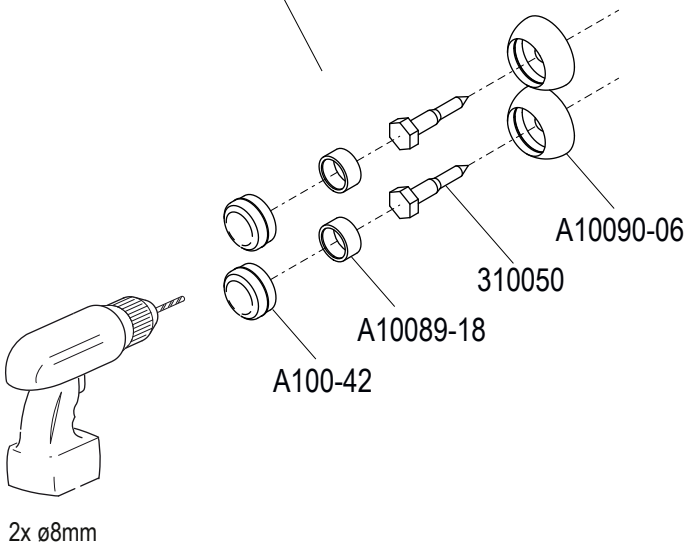

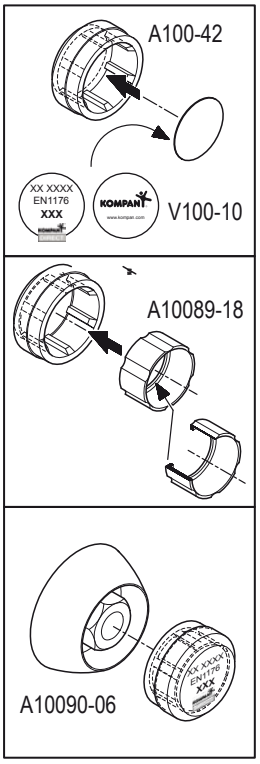

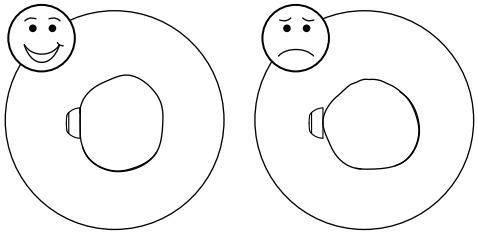

VNRO911XXXX 20160331 PetrJu

Copyright©KOMPAN A/S

Appendix (III)

Horizontal & Vertical Surface Areas

A. Warlock's Escape (NRC400101-1001)

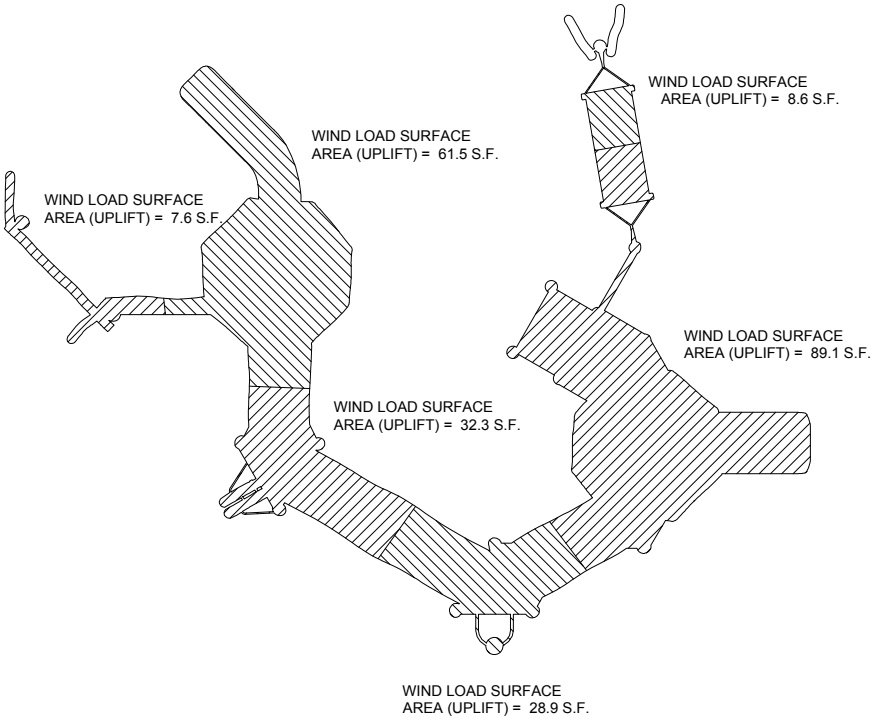

PLAN

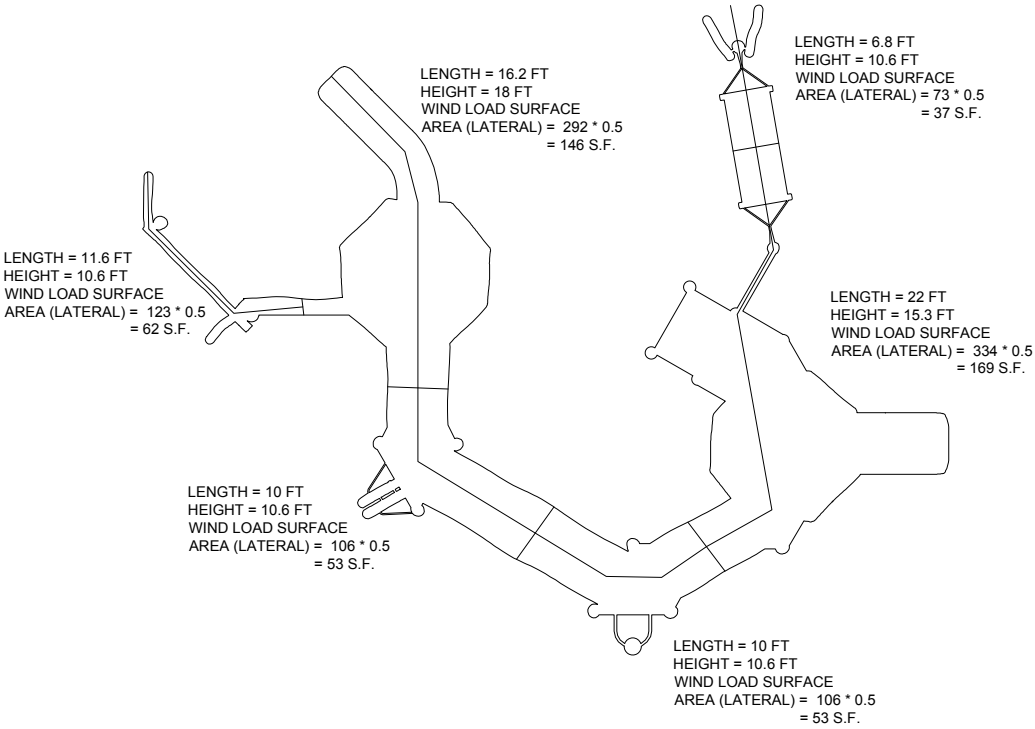

LATERAL AREA

A. Warlock's Escape (NRC400101-1001)

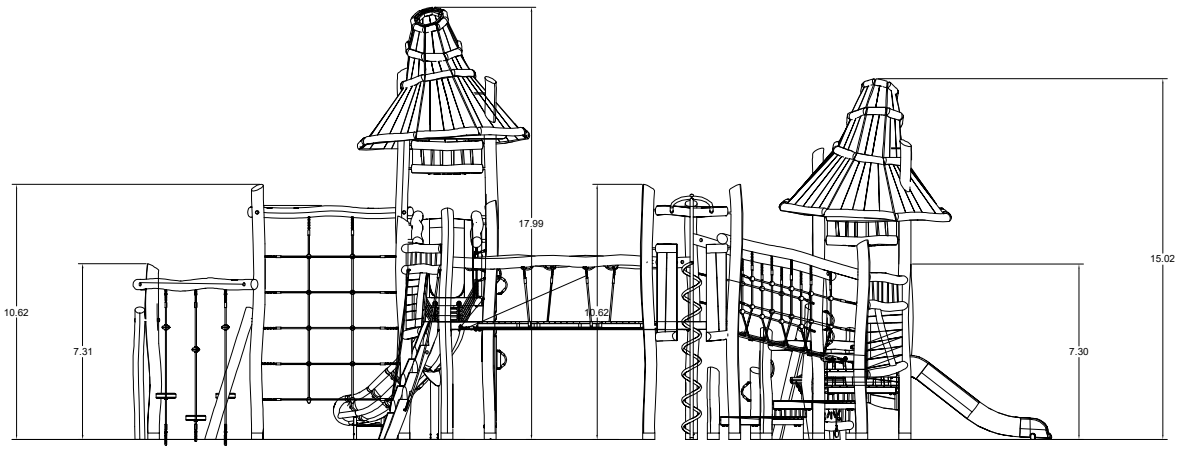

ELEVATION

B. Spinner Bowl
(ELE400024-3717BL)

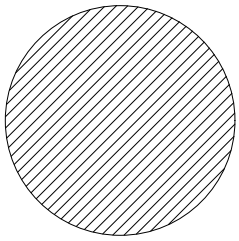

WIND LOAD SURFACE
AREA (UPLIFT) = 2.55 S.F.

PLAN

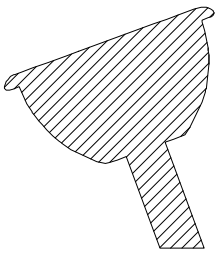

WIND LOAD SURFACE
AREA (LATERAL) = 146 S.F.

ELEVATION

C. Waterlilies Balance Posts
(NRO820-0601)

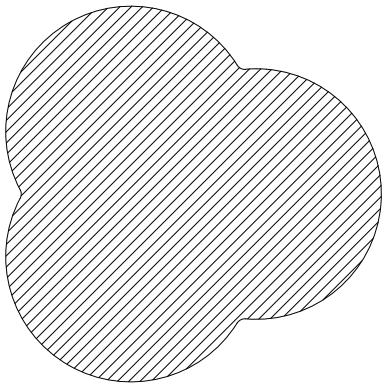

WIND LOAD SURFACE
AREA (UPLIFT) = 1.62 S.F.

PLAN

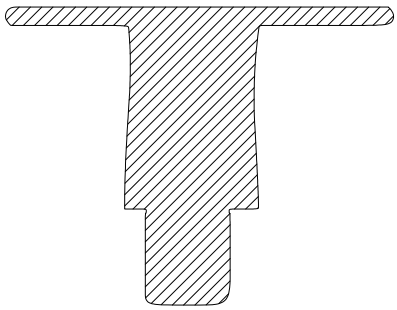

WIND LOAD SURFACE
AREA (LATERAL) = 0.6 S.F.

ELEVATION

D. Tree Climber (NRO834-1001)

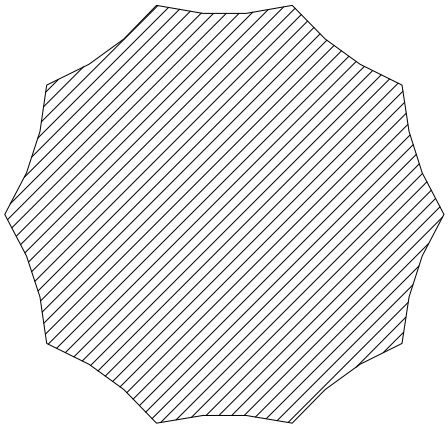

WIND LOAD SURFACE AREA
(UPLIFT) = 234 * 0.5
= 117 S.F.

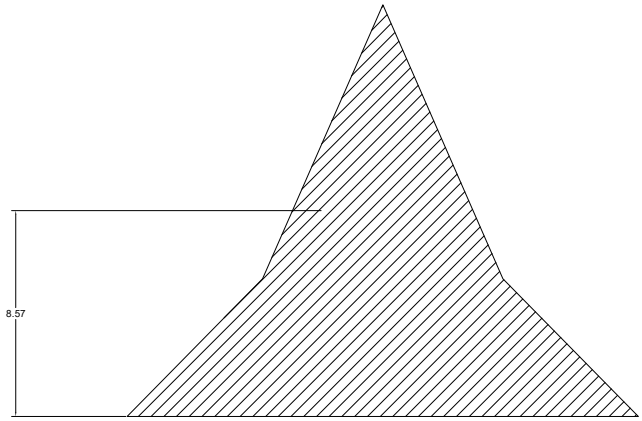

WIND LOAD SURFACE AREA
(UPLIFT) = 147 * 0.5
= 74 S.F.

ELEVATION

E. Stilts
(NRO806-0601)

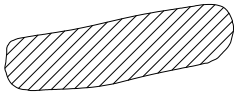

WIND LOAD SURFACE AREA
(UPLIFT) = 0.8 S.F.

PLAN

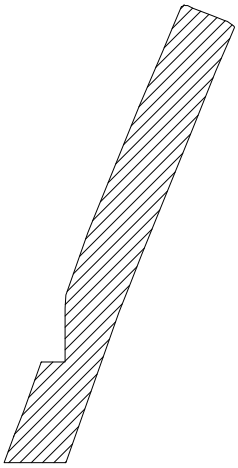

WIND LOAD SURFACE AREA
(UPLIFT) = 1.65 S.F.

ELEVATION

F. Parkour 5
(NRO857-1003)

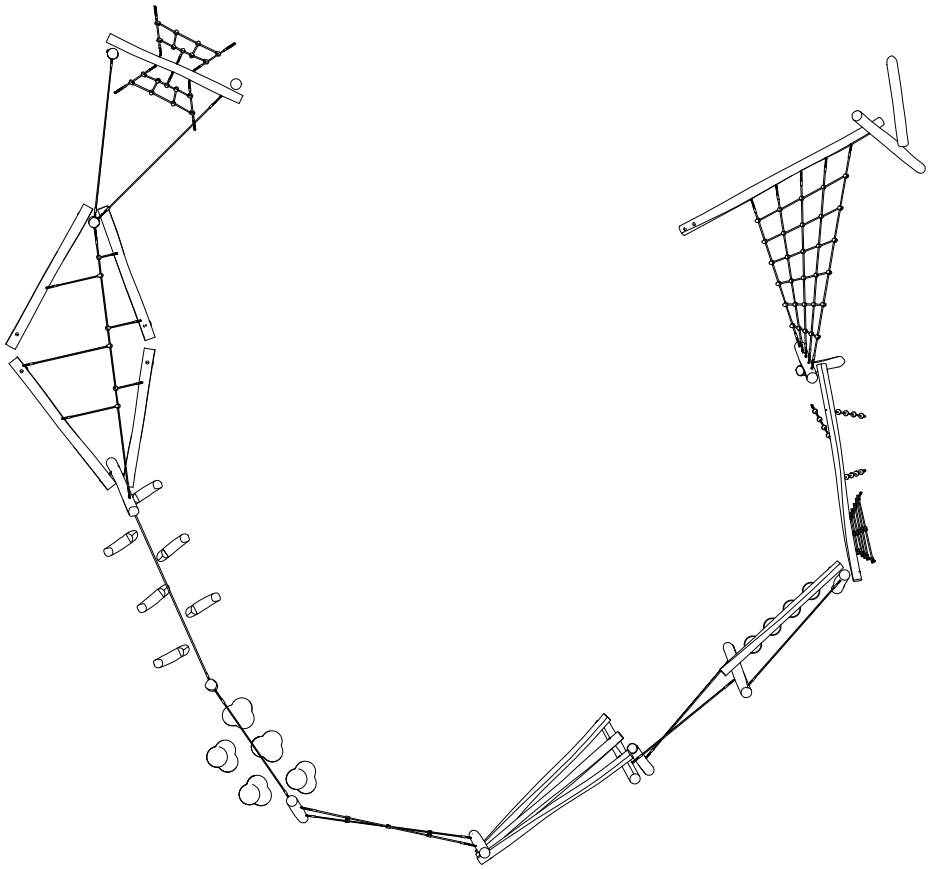

PLAN

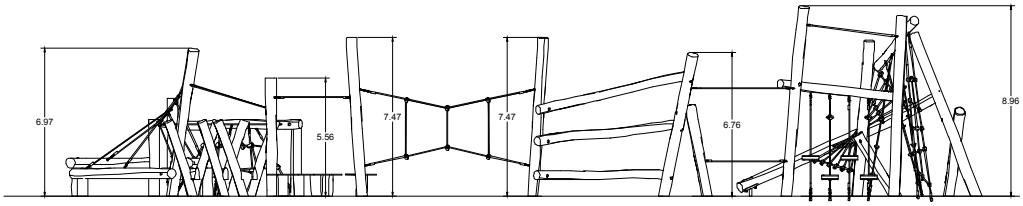

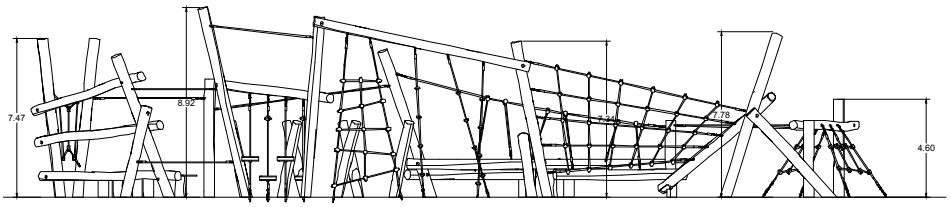

ELEVATION

G. Birds Nest Swing (NRO911-1101)

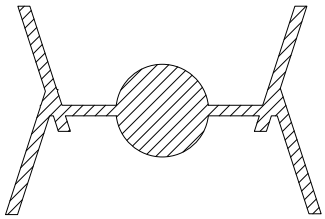

WIND LOAD SURFACE
AREA (UPLIFT) = 31 S.F.

PLAN

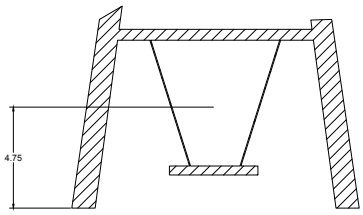

WIND LOAD SURFACE
AREA (LATERAL) = 26 S.F.

ELEVATION

Appendix (IV)

Site plan

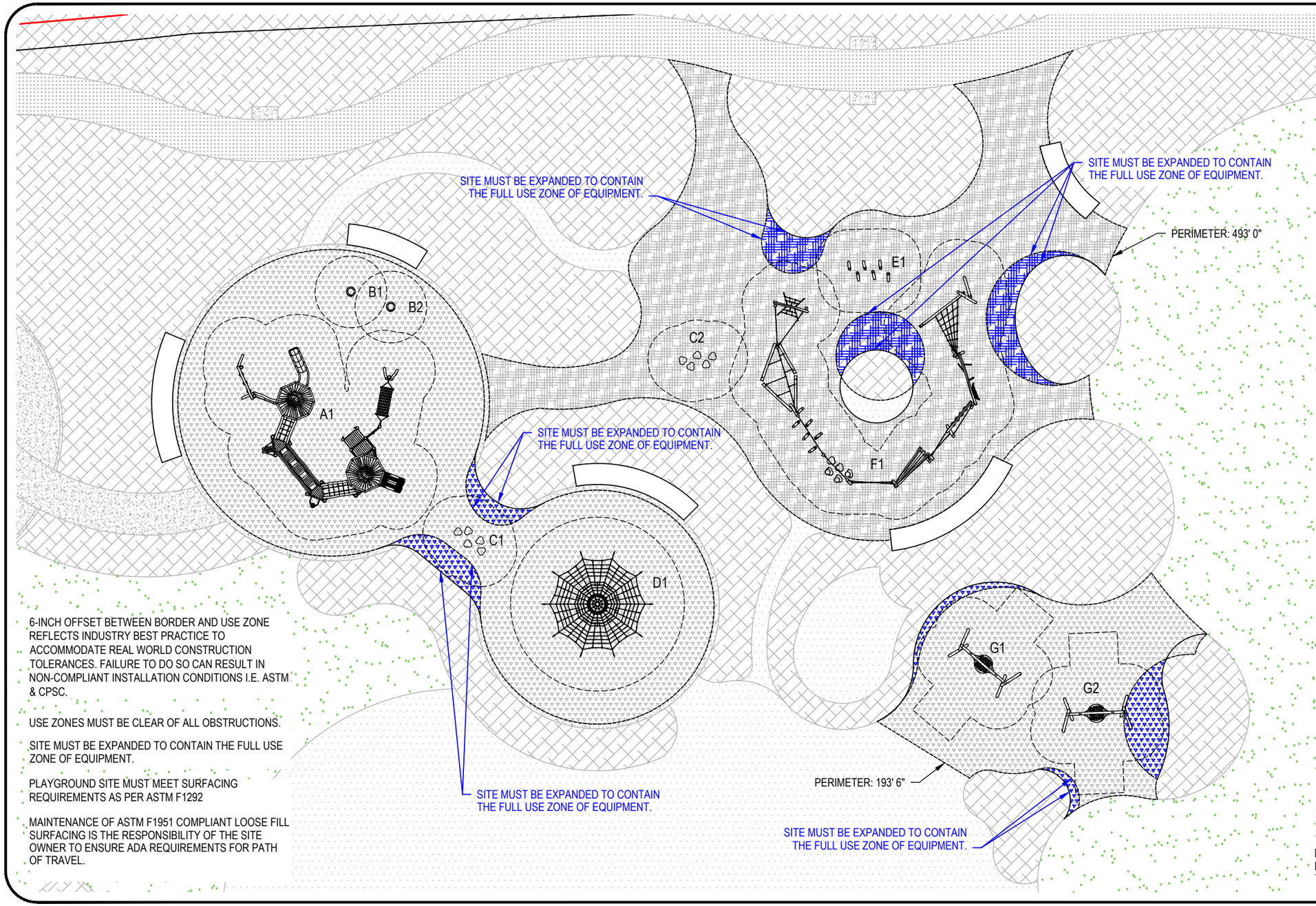

6-INCH OFFSET BETWEEN BORDER AND USE ZONE REFLECTS INDUSTRY BEST PRACTICE TO ACCOMMODATE REAL WORLD CONSTRUCTION TOLERANCES. FAILURE TO DO SO CAN RESULT IN NON-COMPLIANT INSTALLATION CONDITIONS I.E. ASTM & CPSC.

USE ZONES MUST BE CLEAR OF ALL OBSTRUCTIONS.

SITE MUST BE EXPANDED TO CONTAIN THE FULL USE ZONE OF EQUIPMENT.

PLAYGROUND SITE MUST MEET SURFACING REQUIREMENTS AS PER ASTM F1292

MAINTENANCE OF ASTM F1951 COMPLIANT LOOSE FILL SURFACING IS THE RESPONSIBILITY OF THE SITE OWNER TO ENSURE ADA REQUIREMENTS FOR PATH OF TRAVEL.

ADA Evaluation

With the introduction of the Americans with Disabilities Act (ADA) in 1990 and the subsequent adoption of standards specific to play areas, accessibility has become an important issue to everyone.

Below is a chart evaluating the play area for your proposed playground. This evaluation assumes that proper resilient surfacing within the play site and an accessible route of travel to the play area and equipment are a part of this proposal package. Also, that no other play equipment is in the site.

This play area meets current ADA requirements.

Play Area for 5-12 Year Olds

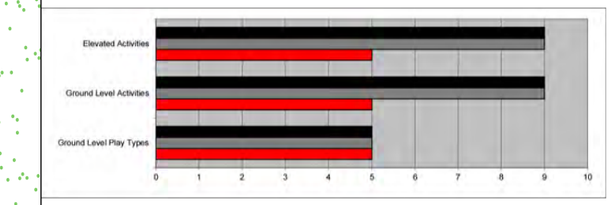

	Elevated Activities	Ground Level Activities	Ground Level Play Types
Quantity Present in Site	9	9	5
Quantity on Accessible Route	9	9	5
Quantity Required to be Accessible	5	5	5

Play Area Accessibility Checklist

KEEP A COPY OF THIS FORM FOR YOUR RECORDS.

Play Areas for 2–5 year olds and 5–12 year olds, as well as geographically separated play areas, should be evaluated separately.

Site Name Gary Matzner
Age Group 5-12
Date January 13, 2025
Prepared By MelEwa

Item Number / Name	Play Activity	Elevated	Accessible	Ground	Accessible	Ground Level Play Type
NRC400101 Warlock's Escape	Double Slide	•	•			
	Inclined Net Bridge	•	•			
	Curly Climber	•	•			
	Waggle Bridge	•	•			
	Log Climber	•	•			
	Inclined Net Bridge	•	•			
	Climbing Wall	•	•			
	Modular Slide	•	•			
	Climbing Net	•	•			
	Sewing Panel			•	•	Experimenting
	Hammock			•	•	Gathering
	Balance Disks			•	•	Balancing
ELE400024 Spinner Bowl				•	•	Spinning
ELE400024 Spinner Bowl				•	•	Spinning
NRO834 Tree Climber				•	•	Climbing/Crawling
NRO857 Parkour 005				•	•	Climbing/Crawling
NRO820 Waterlily Balance 5 pcs.				•	•	Balancing
NRO820 Waterlily Balance 5 pcs.				•	•	Balancing
	TOTALS	9	9	9	9	5
		Elevated Activities	Accessible Elevated	Ground Level Activities	Accessible Ground Level	DIFFERENT Ground Level Play Type

NOTE: If elevated play components exceed 19, the play area requires a ramp structure. https://www.access-board.gov/ada/guides/chapter-10-play-areas/#when-ramps-are-required. ADA 2010, 1008.2, Exception #1.

Accessible Elevated Activities Required 5
50% of elevated activities must be accessible.

Accessible Ground Level Activities Required 5
See table for accessibility requirements.

Accessible Ground Level Play Types Required 5
See table and compare to total number of different ground level play types. The larger number is the number of ground level play types that must be accessible.

NOTE: If a ground level play type is present but not accessible and it is the ONLY ONE, an additional ground level play component with the same play type MUST BE PROVIDED IN THE PLAY AREA TO OFFER EQUITY. (ADA2010, Chapter 2: Scoping Requirements, 240.2.1.1 Minimum Number and Types)

This form is intended to assist the evaluation of accessibility for outdoor play facilities. This form does not represent all factors required for an accessible play facility contained in the regulations, and therefore is not a guarantee, nor an confirmation of accessibility. Requirements for accessibility include appropriate accessible routes, maneuvering spaces and clear floor and ground spaces. Play components must include appropriate transfer heights, which be determined by comp where appropriate. Providing and maintaining accessibility is the responsibility of the Play Facility Owner.

THE SITE PLAN AS SHOWN MEETS THE REQUIREMENTS OF THE F.B.C. (2023) ACCESSIBILITY CODE SECTIONS 240 PLAY AREAS AND 1008.2 ACCESSIBLE ROUTES SERVING PLAY AREAS.

MAINTENANCE OF ASTM F1951 COMPLIANT LOOSE FILL SURFACING IS THE RESPONSIBILITY OF THE SITE OWNER TO ENSURE ADA REQUIREMENTS FOR PATH OF TRAVEL.

#	Product Number	Product Name	M.F.H.	Count
A	NRC400101-1001	Warlock's Escape	9'8"	1
B	ELE400024-xx17DT	Spinner Bowl	2'0"	2
C	NRO820_2D_US	Waterlilies Balance Posts - 5 Pcs	1'1"	2
D	NRO834-xx01	Tree Climber	6'0"	1
E	NRO806-xx01	Stilts	3'7"	1
F	NRO857-xx03	Parkour 1	5'7"	1
G	NRO911-xx01	Birds Nest Swing	7'7"	2

EWF AREA: 4,519 SF

EWF EXPANSION AREA (REQUIRED): 347 SF

GREEN TURF AREA: 6,019 SF

COLOR TURF EXPANSION AREA (REQUIRED): ## SF

CONCRETE CURB: 324' 1"

Gary Matzner Park

6610 N Kendall Dr.
Pinecrest, FL
Site Plan

0 20 40

1"=20'-0" ON 11" x 17" SHEET

MANUFACTURER'S SHOP DRAWING:

FOR USE BY CONTRACTOR, ENGINEER, OR DESIGN PROFESSIONAL OF RECORD. SEE SIGNED SALES PROPOSAL FOR COMPLETE SCOPE TO BE PROVIDED BY KOMPAN OR REPRESENTING AGENCY. CONFIRM FINAL PLAN AND SCOPE WITH KOMPAN SALES REP OR PROJECT MANAGER PRIOR TO USE FOR REVIEW, PERMITTING, OR CONSTRUCTION.

TO BE READ CONTINGENTLY WITH KOMPAN'S STANDARDS FOR SITE PREPARATION, MATERIALS AND INSTALLATION PROCESSES; PROVIDED AFTER EQUIPMENT PURCHASE. A COMPLIANT PLAYGROUND TO KOMPAN'S STANDARDS MUST SATISFY ALL REQUIREMENTS IN THE CODE OF CONDUCT.

SLAB BY OTHERS UNLESS OTHERWISE NOTED. FOR SURFACE MOUNT OPTIONS, THE CONCRETE REQUIREMENTS MAY BE UP TO 5½" OF 3,500 PSI MINIMUM COMPRESSIVE STRENGTH. CONTACT KOMPAN FOR SPECIFIC PRODUCT REQUIREMENTS. ALL COMPOSITE STRUCTURES SHOWN REQUIRE A SITE GRADE OF 2%. MAXIMUM, 1% OPTIMAL. SPECIFICATIONS FOR EACH KOMPAN STRUCTURE MAY BE FOUND AT KOMPAN.COM/KOMPANMASTER

DIMENSIONS OF PLAY AREA, SIZE AND ORIENTATION, LOCATIONS OF ALL EXISTING UTILITIES, EQUIPMENT AND SITE FURNISHINGS TO BE FIELD VERIFIED PRIOR TO CONSTRUCTION.

PREPARED AND PRINTED IN USA BY KOMPAN © 2025 KOMPAN, INC. AUSTIN, TX. USA 800-426-9788

KOMPAN® Let's play

SALES REPRESENTATIVE			SHEET
OscLop			K1.0
REVIEW BY	DRAWN BY	DATE	
DESIGN	MelEwa	2025-01-13	
REV. NO.	REV. BY	REV. DATE	REVISION NOTES
1	MelEwa	2025-05-02	Swings, container expansion

LAYOUT IS IN ACCORDANCE WITH ASTM F1487