REVIEWED BY
22CORE CONSTRUCTION

MIAMI-DADE COUNTY
PRODUCT CONTROL SECTION
11805 SW 26 Street, Room 208
Miami, Florida 33175-2474
T (786) 315-2590 F (786) 315-2599
www.miamidade.gov/economy

DEPARTMENT OF REGULATORY AND ECONOMIC RESOURCES (RER)
BOARD AND CODE ADMINISTRATION DIVISION

RECEIVED
11/24/2025
CFS Engineering Group, Inc.

NOTICE OF ACCEPTANCE (NOA)

Custom Doors & Closets LLC
15879 N. W. 4th Street,
Pembroke pines, FL 33028

SCOPE:

This NOA is being issued under the applicable rules and regulations governing the use of construction materials. The documentation submitted has been reviewed and accepted by Miami-Dade County RER -Product Control Section to be used in Miami Dade County and other areas where allowed by the Authority Having Jurisdiction (AHJ).

This NOA shall not be valid after the expiration date stated below. The Miami-Dade County Product Control Section (In Miami Dade County) and/or the AHJ (in areas other than Miami Dade County) reserve the right to have this product or material tested for quality assurance purposes. If this product or material fails to perform in the accepted manner, the manufacturer will incur the expense of such testing and the AHJ may immediately revoke, modify, or suspend the use of such product or material within their jurisdiction. RER reserves the right to revoke this acceptance, if it is determined by Miami-Dade County Product Control Section that this product or material fails to meet the requirements of the applicable building code.

This product is approved as described herein and has been designed to comply with the Florida Building Code, including the High Velocity Hurricane Zone.

DESCRIPTION: Single Outswing Opaque Pivot Solid Wood Door-L.M.I.

APPROVAL DOCUMENT: Drawing No. **AD19-22** Rev **R3** titled "Single Outswing Panel Pivot Wood Door", sheets 1 through 8 of 8, dated April 15, 2021 and last revised on 02/05/2025, prepared by MCY Engineering, Inc., signed and sealed by Yipping Wang, P.E., bearing the Miami-Dade County Product Control Revision stamp with the Notice of Acceptance number and revision date by the Miami-Dade County Product Control Section.

MISSILE IMPACT RATING: Large and Small Missile Impact Resistant

Limitations:

1. See sheet **03** for Design Pressure and see **recess** installations of bottom Pivot bearing case (detail **C/D1**), inside the continuous finish floor. See top pivot mount detail in sheets 02 & 05.
2. Water rating is approved, only with inside water collection system, as shown in channel detail in sheet **03**.
3. (SG= 0.45) solid wood spices. Decorative wood clad or metal clad, as tested is permissible.

LABELING: Each unit shall bear a permanent label with the manufacturer's name or logo, **San Pedro Sula, Honduras** and series and following statement: "Miami-Dade County Product Control Approved", noted herein.

RENEWAL of this NOA shall be considered after a renewal application has been filed and there has been no change in the applicable building code negatively affecting the performance of this product.

TERMINATION of this NOA will occur after the expiration date or if there has been a revision or change in the materials, use, and/or manufacture of the product or process. Misuse of this NOA as an endorsement of any product, for sales, advertising or any other purposes shall automatically terminate this NOA. Failure to comply with any section of this NOA shall be cause for termination and removal of NOA.

ADVERTISEMENT: The NOA number preceded by the words Miami-Dade County, Florida, and followed by the expiration date may be displayed in advertising literature. If any portion of the NOA is displayed, then it shall be done in its entirety.

INSPECTION: A copy of this entire NOA shall be provided to the user by the manufacturer or its distributors and shall be available for inspection at the job site at the request of the Building Official.

This NOA **revises # 23-0823.08** and consists of page 1 and evidence pages E-1, E-2, E-3, E-4, E-5 and E-6, as well as approval document mentioned above.

The submitted documentation was reviewed by **Ishaq I. Chanda, P.E.** Ishaq I. Chanda

MIAMI-DADE COUNTY APPROVED

NOA No. 25-0102.03
Expiration Date: August 16, 2028
Approval Date: February 13, 2025

Custom Doors & Closets, LLC,

NOTICE OF ACCEPTANCE: EVIDENCE SUBMITTED

1. Evidence submitted under previous approval # **17-0724.04**.

A. DRAWINGS

1. Manufacturer's parts, drawings and sections.
2. Drawing No. **AD17-26**, titled "Single Outswing Panel Pivot Wood Door", sheets 1 through 8 of 8, dated AUG 03, 2018, prepared by MCY Engineering, Inc., signed and sealed by Yipping Wang, P.E.

B. TESTS

1. Test reports on: 1) Air Infiltration Test, per FBC, TAS 202-94
   2) Uniform Static Air Pressure Test, Loading per FBC TAS 202-94
   3) Water Resistance Test, per FBC, TAS 202-94
   4) Large Missile Impact Test per FBC, TAS 201-94
   5) Cyclic Wind Pressure Loading per FBC, TAS 203-94
   6) Forced Entry Test, per FBC 2411 3.2.1, TAS 202-94

   Along with the manufacturer's parts drawings, installation diagram and marked-up drawings of outswing wood doors, prepared by Fenestration Testing Laboratories, Test Report No **FTL-9783** (17787), dated 11/15/17, signed and sealed by Idalmis Ortega, P.E.

C. CALCULATIONS

1. Anchor verification calculations complying w/ FBC 2007, prepared by MCY Engineering Inc., dated DEC 19. 2017 and last revised on May 08, 2018, signed and sealed by Yipping Wang, P.E.

D. QUALITY ASSURANCE

1. Miami Dade Department of Regulatory and Economic Resources (RER).

E. MATERIAL CERTIFICATIONS

1. None.

F. STATEMENTS

1. Statement letter of conformance to FBC 2014(5th Edition), prepared by MCY Engineering Inc., dated 12/19/2017, signed and sealed by Yipping Wang, P.E.
2. Statement of lab compliance, as part of the test report.

G. OTHER

1. Distributor Agreement document between Maderas de Montana MAHVKAIV Cia Ltda, Ecuador (manufacturer) and Inside the Art of Craftsmanship, USA (Distributor), signed by Pablo F.M. Moscoso (Manufacturer) and Luis F. Calderon (Distributor).
2. Test Proposal No. **16-0353** dated 01/28/16 and **16-1278-A** dated 10/11/16, issued by RER.

☑ NO EXCEPTIONS TAKEN ☐ EXCEPTIONS NOTED
☐ SUBMIT SPECIFIED ITEM ☐ REVISE AND RESUBMIT
☐ NON-COMPLIANT SUBMITTAL ☐ REJECTED
☑ ACKNOLEDGE RECEIPT FOR RECORD

Review is only for general conformance with design concept of project and general compliance with Contract Documents and is not intended to be a verification of total material required or that all items required are shown. Contractor is responsible for confirming and correcting dimensions at job site, for information which pertains to fabrication processes or construction means and methods. Checking of shop drawings shall not relieve the Contractor of responsibility for deviation from requirements of Contract Documents nor for errors or omissions in shop drawings.

CFS ENGINEERING GROUP, INC.

BY CS DATE 12-01-25

Reviewed only for compliance with wind loading criteria and conformance with general design intent.

■ NO EXCEPTIONS TAKEN ☐ REJECTED
☐ MAKE CORRECTIONS AS NOTED ☐ SUBMIT SPECIFIED ITEM
☐ REVIEW AND RESUBMIT ☐ NOT REVIEWED

Submittal is reviewed only as to general conformity with design concept of the project and general compliance with the information given in the Contract Documents. Corrections and or comments made as part of this submittal review do not relieve contractor of responsibility from conformance with the Contract Documents, applicable codes, and laws- all of which have priority over this submittal. The design professional does not warrant or represent that the information within the submittal is either accurate or complete. Sole responsibility for correct design, details, and dimensions shall remain with the party providing the submittal. Contractor is responsible for all dimensions, quantities and performance requirements confirmed and correlated at the job site;for all information that pertains solely to the fabrication process or to techniques of construction;for all coordination of the work of all trades; for assuring consistency with the Contract Documents; and for performing the work in a safe and satisfactory manner.

FAO ARCHITECTURE, LLC.

Reviewed by: FAO Date: 12-1-25

Ishaq I. Chanda, P.E.
Product Control Unit Supervisor
NOA No. 25-0102.03
Expiration Date: August 16, 2028
Approval Date: February 13, 2025

NOTICE OF ACCEPTANCE: EVIDENCE SUBMITTED

2. Evidence submitted under previous submittal.

A. DRAWINGS

1. Drawing No. **AD19-22** (Previous **AD17-26**), titled "Single Outswing Panel Pivot Wood Door", sheets 1 through 8 of 8, dated AUG 29, 2019, prepared by MCY Engineering, Inc., signed and sealed by Yipping Wang, P.E.

B. TESTS (submitted under previous approval # **17-0724.04**).

1. None.

C. CALCULATIONS (submitted under previous approval # **17-0724.04**)

1. None.

D. QUALITY ASSURANCE

2. Miami Dade Department of Regulatory and Economic Resources (RER).

E. MATERIAL CERTIFICATIONS

2. None.

F. STATEMENTS

1. Statement letter dated 03/01/2019, issued by Custom Doors and Closets, LLC having purchased NOA # 17-0724.04 (Inside the Art Craftsmanship Corp.) and requesting to issue new NOA, signed by Adriana Cordoba, general manager.
2. Statement letter dated 09/09/2019, issued by Inside the Art of Craftsmanship Corp, stating the sale of NOA # 17-0724.04 (Inside the Art Craftsmanship Corp.), all Rights, Knowhow, equipment to Custom Doors and Closets and requesting to rescind NOA #17-0724.04, signed by Luis Calderon, Vice President (Inside the Art Craftsmanship Corp)
3. Statement letter of conformance to FBC 2017(6th Edition), prepared by MCY Engineering Inc., dated 08/14/19, signed and sealed by Yipping Wang, P.E.
3. Statement of lab compliance, as part of the test report.

G. OTHER

1. Assignment and transfer agreement dated FEB 15, 2019, between Custom Doors and Closets (Assignee) and Inside the Art of Craftsmanship, Corp. (Assignor) of NOA #**17-0724.04**, signed by Adriana Cordoba and Luis Calderon, respectively on their company's behalf.
2. Distributor Agreement document dated 02/15/2019 between Maderas de Montana MAHVKAIV, Ecuador (manufacturer) and Custom Doors and Closets, USA (Distributor), signed by Pablo F.M. Moscoso (Gen. Manager) and Adriana L. Cordoba (Gen. Manager), respectively on behalf of their companies.
3. Test Proposal No. **16-0353** dated 01/28/16 and **16-1278-A** dated 10/11/16, issued by RER.
4. Reference NOA # **17-0724.04 (**Inside the Art Craftsmanship Corp.)

Ishaq I. Chanda

Ishaq I. Chanda, P.E.
Product Control Unit Supervisor
NOA No. 25-0102.03
Expiration Date: August 16, 2028
Approval Date: February 13, 2025

NOTICE OF ACCEPTANCE: EVIDENCE SUBMITTED

3. Evidence submitted under previous approval.

A. DRAWINGS

1. Drawing No. **AD19-22**, titled "Single Outswing Panel Pivot Wood Door", sheets 1 through 8 of 8, dated April 15, 2021, prepared by MCY Engineering, Inc., signed and sealed by Yipping Wang, P.E.

B. TESTS

1. None.

C. CALCULATIONS

1. None.

D. QUALITY ASSURANCE

1. Miami Dade Department of Regulatory and Economic Resources (RER).

E. MATERIAL CERTIFICATIONS

1. None.

F. STATEMENTS

1. Statement letter of conformance to FBC 2020 (7th Edition), prepared by MCY Engineering Inc., dated 04/15/21, signed and sealed by Yipping Wang, P.E.

G. OTHER

1. This NOA **revises # 19-0221.02,** expiring **08/16/23.**
2. Distributor Agreement document dated 02/15/2019 between Maderas de Montana MAHVKAIV, Honduras (manufacturer) and Custom Doors and Closets, USA (Distributor), signed by Carlos A. Calderon (Gen. Manager) and Adriana L. Cordoba (Gen. Manager), respectively on behalf of their companies.
3. Previous Reference NOA # **17-0724.04 (**Inside the Art Craftsmanship Corp.)

Ishaq I. Chanda

Ishaq I. Chanda, P.E.
Product Control Unit Supervisor
NOA No. 25-0102.03
Expiration Date: August 16, 2028
Approval Date: February 13, 2025

NOTICE OF ACCEPTANCE: EVIDENCE SUBMITTED

4. Evidence submitted under previous approval.

A. DRAWINGS

1. Drawing No. **AD19-22**, titled "Single Outswing Panel Pivot Wood Door", sheets 1 through 8 of 8, dated April 15, 2021, prepared by MCY Engineering, Inc., signed and sealed by Yipping Wang, P.E.

B. TESTS

1. None.

C. CALCULATIONS

1. None.

D. QUALITY ASSURANCE

1. Miami Dade Department of Regulatory and Economic Resources (RER).

E. MATERIAL CERTIFICATIONS

1. None.

F. STATEMENTS

1. Statement renewal request by Maderas de Montana, Mahkaiv, signed by Alex Maldonado, Plant Manager.
2. Statement letter of conformance to FBC 2020 (7th Edition), prepared by MCY Engineering Inc., dated 04/15/21, signed and sealed by Yipping Wang, P.E. (submitted under file # **21-0419.07**)

G. OTHER

1. This NOA **renews** # **21-0419.07,** expiring **08/16/28.**
2. Distributor Agreement document dated xx/xx/2023 between Maderas de Montana MAHVKAIV, Honduras (manufacturer) and Custom Doors and Closets, USA (Distributor), signed by Alex Hernandez (Gen Manager) and Isabel Melendez (Gen Manager), respectively on behalf of their companies.
3. Previous US Distributors NOA(s) Reference # **17-0724.04 (**Inside the Art Craftsmanship Corp.) and # **19-0221.02**, #**21-0221.02** (Custom Doors & Closet, LLC).

Ishaq I. Chanda

Ishaq I. Chanda, P.E.
Product Control Unit Supervisor
NOA No. 25-0102.03
Expiration Date: August 16, 2028
Approval Date: February 13, 2025

NOTICE OF ACCEPTANCE: EVIDENCE SUBMITTED

5. Evidence submitted under previous approval.

A. DRAWINGS

1. Drawing No. **AD19-22 Rev R2**, titled "Single Outswing Panel Pivot Wood Door", sheets 1 through 8 of 8, dated April 15, 2021 and last revised on 08/21/23, prepared by MCY Engineering, Inc., signed and sealed by Yipping Wang, P.E.

B. TESTS

1. None.

C. CALCULATIONS

1. None.

D. QUALITY ASSURANCE

1. Miami Dade Department of Regulatory and Economic Resources (RER).

E. MATERIAL CERTIFICATIONS

1. None.

F. STATEMENTS

1. Statement letter of conformance to FBC 2023 (8th Edition), prepared by MCY Engineering Inc., dated 08/21/23, signed and sealed by Yipping Wang, P.E.

G. OTHER

1. This NOA **revises** # **23-0227.08** and updates to FBC 2023**,** expiring **08/16/28.**
2. Distributor Agreement document dated 03/08/2023 between Maderas de Montana MAHVKAIV, Honduras (manufacturer) and Custom Doors and Closets, USA (Distributor), signed by Alex Hernandez (Gen Manager) and Isabel Melendez (Gen Manager), respectively on behalf of their companies (submitted under NOA# **23-0227.08**)
3. Previous US Distributors NOA(s) Reference # **17-0724.04 (**Inside the Art Craftsmanship Corp.) and # **19-0221.02**, #**21-0221.02** and **23-0227.08** (Custom Doors & Closet, LLC).

Ishaq I. Chanda

Ishaq I. Chanda, P.E.
Product Control Unit Supervisor
NOA No. 25-0102.03
Expiration Date: August 16, 2028
Approval Date: February 13, 2025

NOTICE OF ACCEPTANCE: EVIDENCE SUBMITTED

5. New Evidence submitted.

A. DRAWINGS

1. Drawing No. **AD19-22 Rev R3**, titled "Single Outswing Panel Pivot Wood Door", sheets 1 through 8 of 8, dated April 15, 2021 and last revised on 08/21/23, prepared by MCY Engineering, Inc., signed and sealed by Yipping Wang, P.E.

B. TESTS

1. None.

C. CALCULATIONS

1. Anchor verification calculation dated 01/25/25 prepared by MCY Engineering, signed and sealed by Yipping Wang, P.E.

D. QUALITY ASSURANCE

1. Miami Dade Department of Regulatory and Economic Resources (RER).

E. MATERIAL CERTIFICATIONS

1. None.

F. STATEMENTS

1. Statement letter of conformance to FBC 2023 (8th Edition), prepared by MCY Engineering Inc., dated 08/21/23, signed and sealed by Yipping Wang, P.E.

G. OTHER

1. This NOA **revises** # **23-0823.08** and updates wood species**,** expiring **08/16/28.**
2. Distributor Agreement document dated 03/08/2023 between Maderas de Montana MAHVKAIV, Honduras (manufacturer) and Custom Doors and Closets, USA (Distributor), signed by Alex Hernandez (Gen Manager) and Isabel Melendez (Gen Manager), respectively on behalf of their companies (submitted under NOA# **23-0227.08**)
3. Previous US Distributors NOA(s) Reference # **17-0724.04 (**Inside the Art Craftsmanship Corp.) and # **19-0221.02**, #**21-0221.02** and **23-0227.08** (Custom Doors & Closet, LLC).

Ishaq I. Chanda

Ishaq I. Chanda, P.E.
Product Control Unit Supervisor
NOA No. 25-0102.03
Expiration Date: August 16, 2028
Approval Date: February 13, 2025

SINGLE OUTSWING PIVOT OPAQUE WOOD DOOR L.M.I.

GENERAL NOTES:

- THIS PRODUCT HAS BEEN DESIGNED AND TESTED TO COMPLY WITH THE REQUIREMENTS OF THE FLORIDA BUILDING CODE 8TH EDITION (2023) INCLUDING HIGH VELOCITY HURRICANE ZONE (HVHZ).

- THIS PRODUCT IS A WOOD TYPE DOOR DESIGNED, CONSTRUCTED AND TESTED TO PROVIDE PROTECTION FROM HURRICANE FORCE WINDS AND WIND BORNE DEBRIS (LARGE IMPACT RESISTANCE) WITHIN THE ALLOWABLE DESIGNED PRESSURES AND LIMITATIONS STATED IN THIS APPROVAL.

- PANEL MATERIAL: PANELS ARE CONSTRUCTED USING A SOLID LAMINATED WOOD LOCK STILE, A SOLID LAMINATED WOOD HINGE STILE, A SOLID LAMINATED WOOD TOP RAIL AND A SOLID LAMINATED WOOD BOTTOM RAIL. THE STILES AND RAILS HAVE A MORTISE AND TENON JOINT THAT ARE GLUED USING TILE BOND III. THE PANEL INSERT EDGE ARE GLUED TO THE DOOR STILES AND RAILS USING TILE BOND III.

- THESE DOOR ARE APPROVED FOR AIR AND WATER INFILTRATION WITH INTERIOR WATER COLLECTION STYLE.

- ANCHORS SHALL BE AS LISTED, SPACED AS SHOWN ON DETAILS. ANCHORS EMBEDMENT TO BASE MATERIAL SHALL BE BEYOND WALL DRESSING OR STUCCO.

- ANCHORING OR LOADING CONDITIONS NOT SHOWN IN THESE DETAILS ARE NOT PART OF THIS APPROVAL.

- MATERIALS INCLUDING BUT NOT LIMITED TO STEEL/METAL SCREWS THAT COME INTO CONTACT WITH OTHER DISSIMILAR MATERIALS SHALL MEET THE REQUIREMENTS OF THE FLORIDA BUILDING CODE 8TH EDITION (2023) SECTION AS APPLICABLE.

- METAL STRUCTURES BY OTHERS TO BE DESIGNED PROPERLY TO SUPPORT THE LOADS IMPOSED BY THIS DOOR SYSTEM AND TO TRANSFER SUCH LOADS TO THE BUILDING MAIN STRUCTURE.

- THE DESIGN LOADS SHOWN IN THIS DOCUMENT ARE ALLOWABLE DESIGN LOADS. ULTIMATE LOAD OBTAINED FROM ASCE 7-22, MULTIPLY BY 0.6 SHALL BE LESS THAN OR EQUAL TO MAX. DESIGN LOAD IN THIS DOCUMENT.

- 2BY WOOD BUCKS SHALL BE BY OTHERS AND SHALL BE PROPERLY SCREWED TO TRANSFER LOADS TO BUILDING STRUCTURE.

- SOLID WOOD
  COMMON NAME(S): HONDURAN MAHOGANY, GENUINE MAHOGANY, BIG-LEAF MAHOGANY, BRAZILIAN MAHOGANY, AMERICAN MAHOGANY.
  SCIENTIFIC NAME(S): SWIETENIA MACROPHYLLA.
  ELASTIC MODULUS: 1458000 lbf/in^2 (10.06 GPa)
  MODULUS OF RUPTURE: 11710 lbf/in^2 (80.8 MPa)
  ALL WOOD PARTS SHALL BE TRUE MAHOGANY WITH MINIMUM SPECIFIC GRAVITY OF SG=0.45 OR ANY NATURALLY DURABLE WOOD IN COMPLIANCE WITH THE MINIMUM GRADE 2 AND THE SPECIFIC GRAVITY GREATER THAN SG≥0.45.

HARDWARE SCHEDULE

QUANTITY	DESCRIPTION	DISTANCE	LOCATION	METHOD OF ATTACHMENT
ONE	GU 6-25485 AT-0-1/ 6-34740-01-0-1 LOCK SYSTEM WITH LEVER TYPE HANDLE ON THE INTERIOR AND EXTERIOR AND KEY OPERATOR ON THE INTERIOR AND EXTERIOR	HANDLE 41-1/2" FROM BOTTOM	LOCK STILE	TO HANDLE: (2)10"X2" FH WOOD SCREW
ONE	SURFACE MOUNT METALLIC STRIKE PLATE	41-1/2" FROM BOTTOM	RIGHT FRAME JAMB	(1)6 X 5/8" FH SMS (1)8 X 5/8" FH SMS
THREE	SURFACE MOUNT METALLIC STRIKE PLATE	11", 69-1/2" AND 88" FROM BOTTOM	RIGHT FRAME JAMB	(1)6 X 15/8" FH SMS (1)8 X 5/8" FH SMS
ONE	SURFACE MOUNT METALLIC KEEPER	60-1/2" FROM BOTTOM	LEFT FRAME JAMB	(1)6 X 15/8" FH SMS (1)8 X 5/8" FH SMS
ONE	SURFACE MOUNT METALLIC PIVOT HINGE KEEPER	13-1/2"FROM LEFT	FRAME HEAD	(1)8 X 2" FH SMS
ONE	FRITSJURGENS FLUSH MOUNT METALLIC PIVOT HINGE KEEPER	13-1/2"FROM LEFT	BEARING CASE AT BOTTOM	(1)8 X 2" FH SMS
ONE	FRITSJURGENS FLUSH MOUNT METALLIC PIVOT HINGE	11-1/4"FROM LEFT	TOP RAIL	TOP PANEL USING (4) 10 X 2-1/2" FH WOOD SCREW. TO FRAME USING (4)12"X 2-1/2" FH WOOD SCREW
ONE	FRITSJURGENS FLUSH MOUNT METALLIC PIVOT HINGE	12" FROM LEFT	BOTTOM RAIL	(4)10 X 2" FH WOOD SCREW
ONE	JAKO BOLT FLUSH MOUNT CONCEALED LOCKING PIN WITH KEY OPERATOR (STAIN NICKEL)	60" FROM BOTTOM	HINGE STILE	(2) 6 X 1" FH SMS

ABBREVIATIONS AND SYMBOLS

F.H. - FRAME HEIGHT
F.W. - FRAME WIDTH
D.H. -DOOR HEIGHT
D.W. -DOOR WIDTH
W - WITH
W/O - WITHOUT
O.C. - ON CENTER

C / 7 — SECTION NUMBER / SHEET NUMBER

MIAMI-DADE COUNTY
PRODUCT REVIEWED
as complying with the Florida Building Code
Acceptance No 25-0102.03
Expiration Date 5/16/28
By [signature]
Miami-Dade Product Control

FIRE WINDOW & DOOR, INC.
FLORIDA REGISTRATION
LICENSE
No 52867
C.A.C. No 55983
STATE OF FLORIDA
PROFESSIONAL ENGINEER
Feburary 05th, 2025

MCY ENGINEERING, INC.
GLAZING CONSULTANTS
12781 MIRAMAR PARKWAY #301
MIRAMAR, FL. 33027 P: 305.271.0117
www.MCYEngineering.com MCY@mcyengineering.com

SINGLE OUTSWING PANEL PIVOT DOOR WOOD DOOR (L.M.I.)
CUSTOM DOORS & CLOSETS, LLC.
15879 NW 4th STREET
PEMBROKE PINES FLORIDA 33028
TEL. 954-999-7149

Rev. No.	Date	Drawn By	Description
R3	01/17/2025	James	REVISION
R2	08.21.2023	James	FBC 2023

Drawn Date 01/17/2025
Scale
DRAWING NO. AD19-22
COVER
Sheet No. 01 OF 08

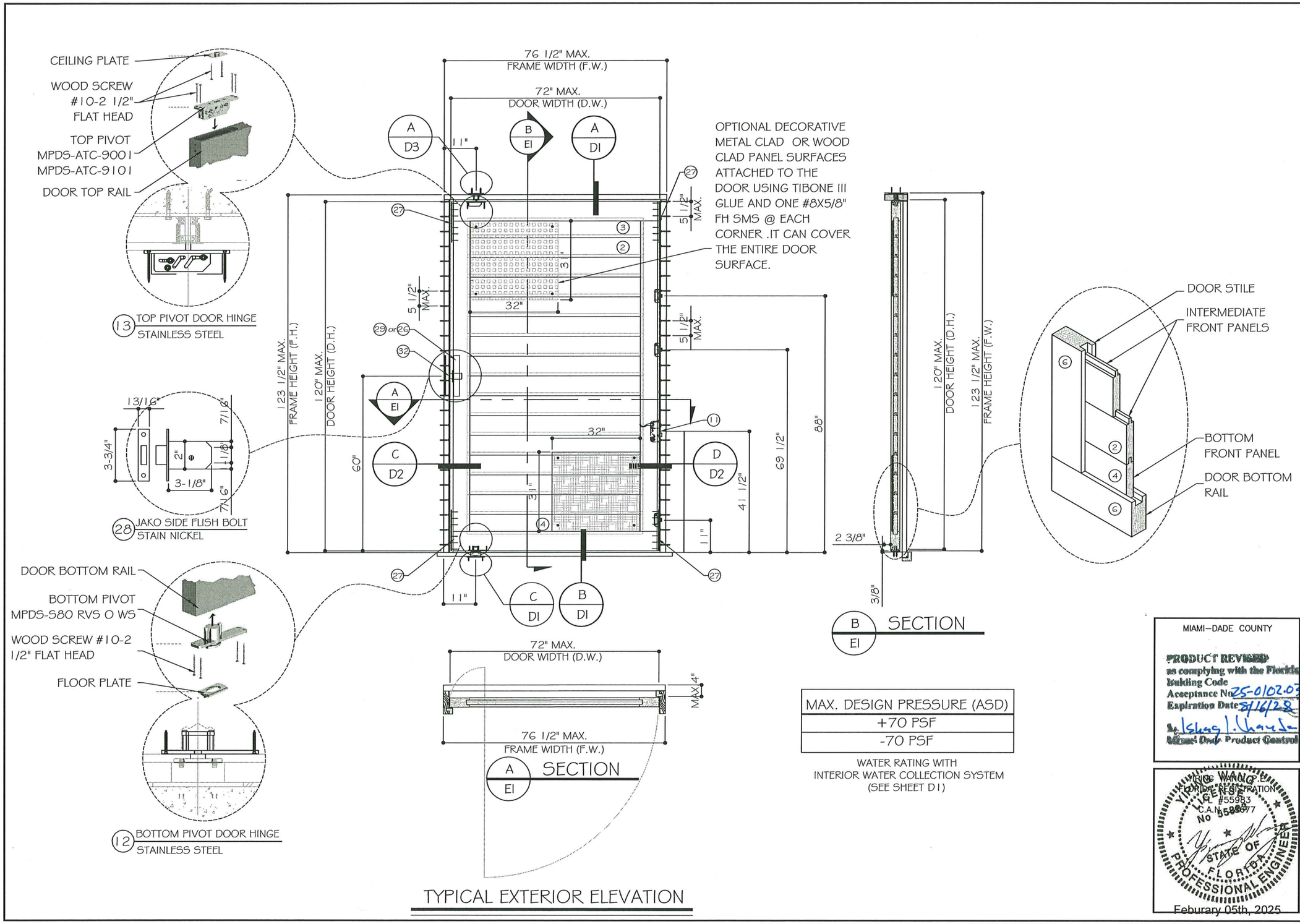

MAX. DESIGN PRESSURE (ASD)
+70 PSF
-70 PSF

WATER RATING WITH INTERIOR WATER COLLECTION SYSTEM (SEE SHEET D1)

TYPICAL EXTERIOR ELEVATION

MIAMI–DADE COUNTY

PRODUCT REVISED as complying with the Florida Building Code
Acceptance No. 25-0102.03
Expiration Date 8/16/28
Miami Dade Product Control

YIRING WANG, P.E.
FLORIDA REGISTRATION
LIC. #55983
C.A.N. 55677
STATE OF FLORIDA
PROFESSIONAL ENGINEER
Feburary 05th, 2025

MCY ENGINEERING, INC.
GLAZING CONSULTANTS
12781 MIRAMAR PARKWAY #301
MIRAMAR, FL. 33027 P: 305.271.0117
www.MCYEngineering.com MCY@mcyengineering.com

SINGLE OUTSWING PANEL PIVOT DOOR WOOD DOOR (L.M.I.)

CUSTOM DOORS & CLOSETS, LLC.
15879 NW 4th STREET
PEMBROKE PINES FLORIDA 33028
TEL. 954-999-7149

Rev. No.	Date	Drawn By	Description
R3	01/17/2025	James	REVISION
R2	08.21.2023	James	FBC 2023

Drawn Date 01/17/2025
Scale

DRAWING NO. AD19–22

E1

Sheet No. 02 OF 08

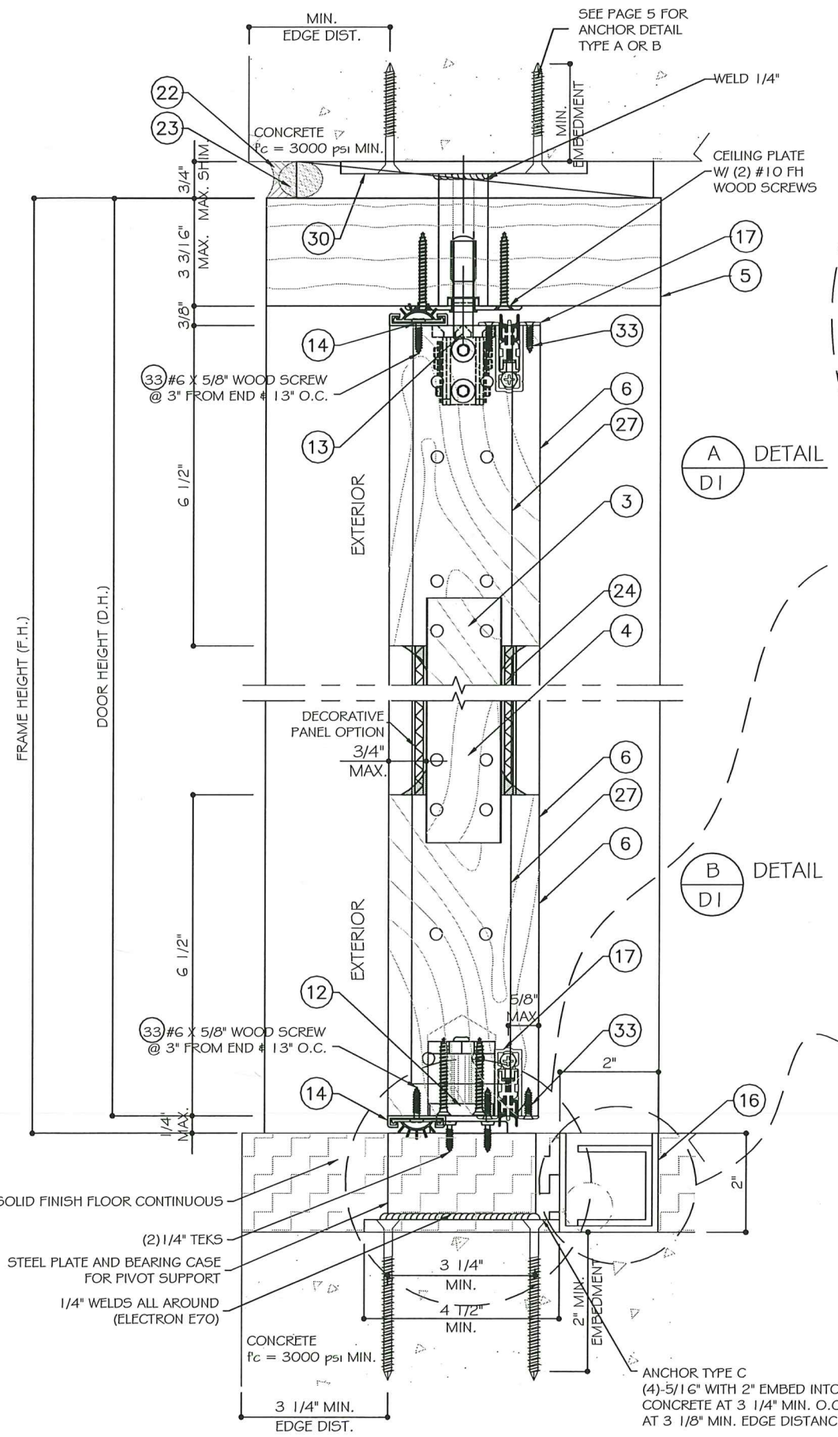

A / D1 DETAIL

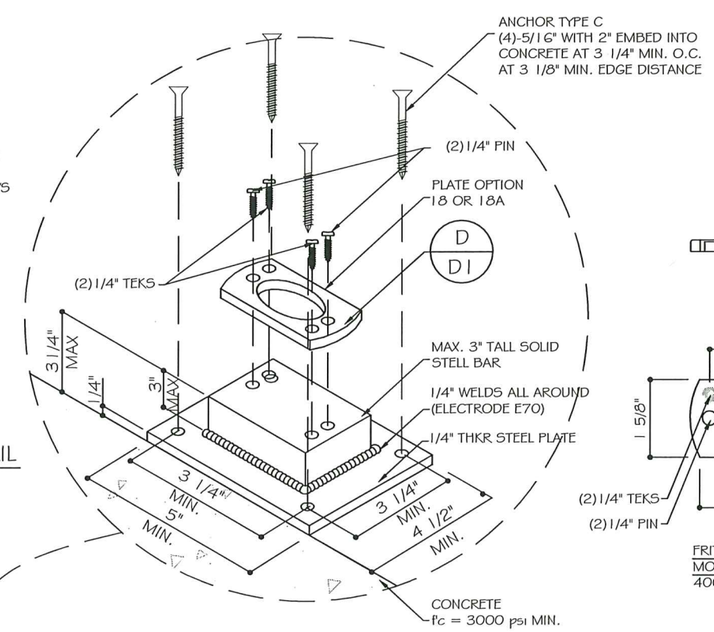

C / D1 STEEL PLATE & BEARING CASE FOR PIVOT SUPPORT AT BOTTOM (TO BE RECESSED INTO FINISH FLOOR)

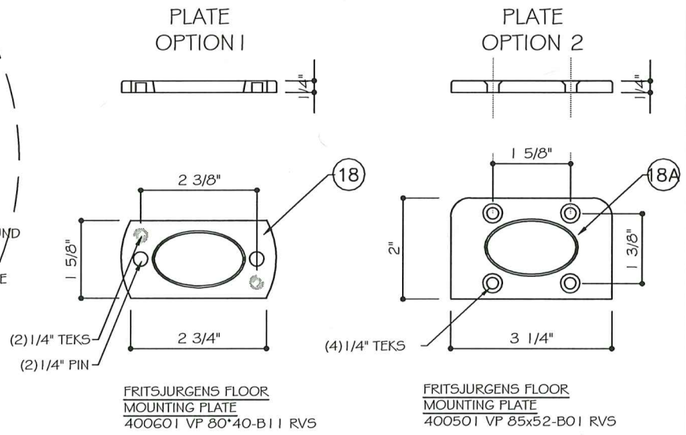

D / D1 SILL MOUNTING PLATE OPTIONS

B / D1 DETAIL

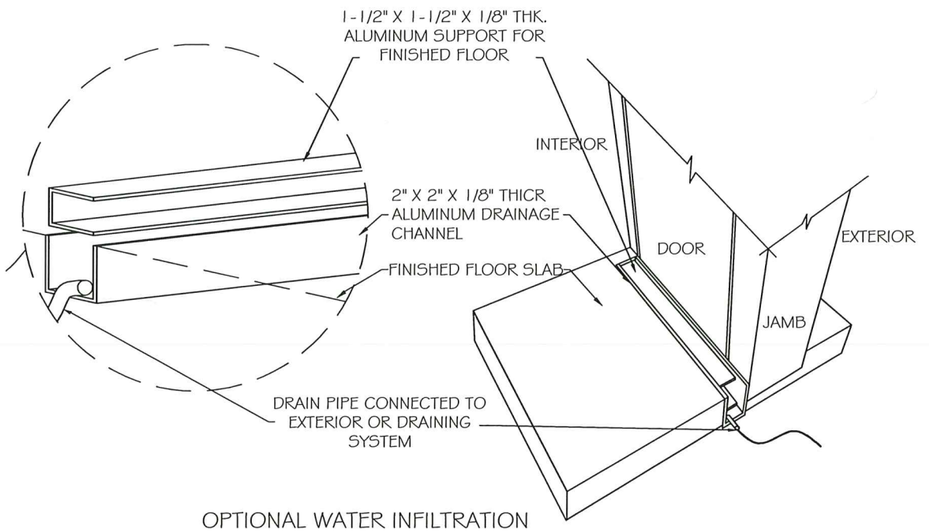

OPTIONAL WATER INFILTRATION THRESHOLD

INSTALLED WHERE WATER INFILTRATION IS REQUIRED

NOTE:
SUBSTRATE SHOWN ON DETAILS IS FOR DEMONSTRATION ONLY. THEY ARE INTERCHANGEABLE.

MIAMI–DADE COUNTY

PRODUCT REVIEWED
as complying with the Florida Building Code
Acceptance No. 25-0102.03
Expiration Date 8/16/28
By Ishag I. Chandra
Miami-Dade Product Control

YIRING WANG, P.E.
FLORIDA REGISTRATION
LIC. #55983
C.A.N. 5[illegible]77
STATE OF FLORIDA
PROFESSIONAL ENGINEER
Feburary 05th, 2025

MCY ENGINEERING, INC.
GLAZING CONSULTANTS
12781 MIRAMAR PARKWAY #301
MIRAMAR, FL. 33027 P: 305.271.0117
www.MCYEngineering.com MCY@mcyengineering.com

SINGLE OUTSWING PANEL PIVOT DOOR WOOD DOOR (L.M.I.)

CUSTOM DOORS & CLOSETS, LLC.
15879 NW 4th STREET
PEMBROKE PINES FLORIDA 33028
TEL. 954-999-7149

Rev. No.	Date	Drawn By	Description
R3	01/17/2025	James	REVISION
R2	08.21.2023	James	FBC 2023

Drawn Date 01/17/2025
Scale

DRAWING NO.
AD19–22

D1

Sheet No.
03 OF 08

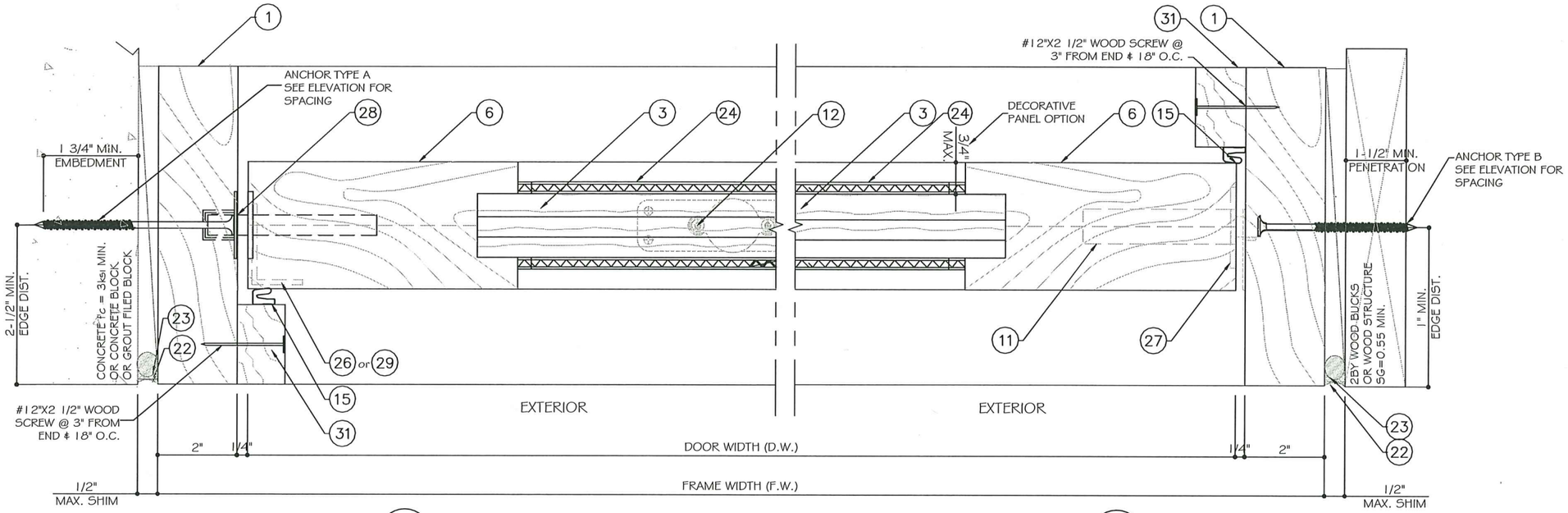

C / D2 DETAIL

D / D2 DETAIL

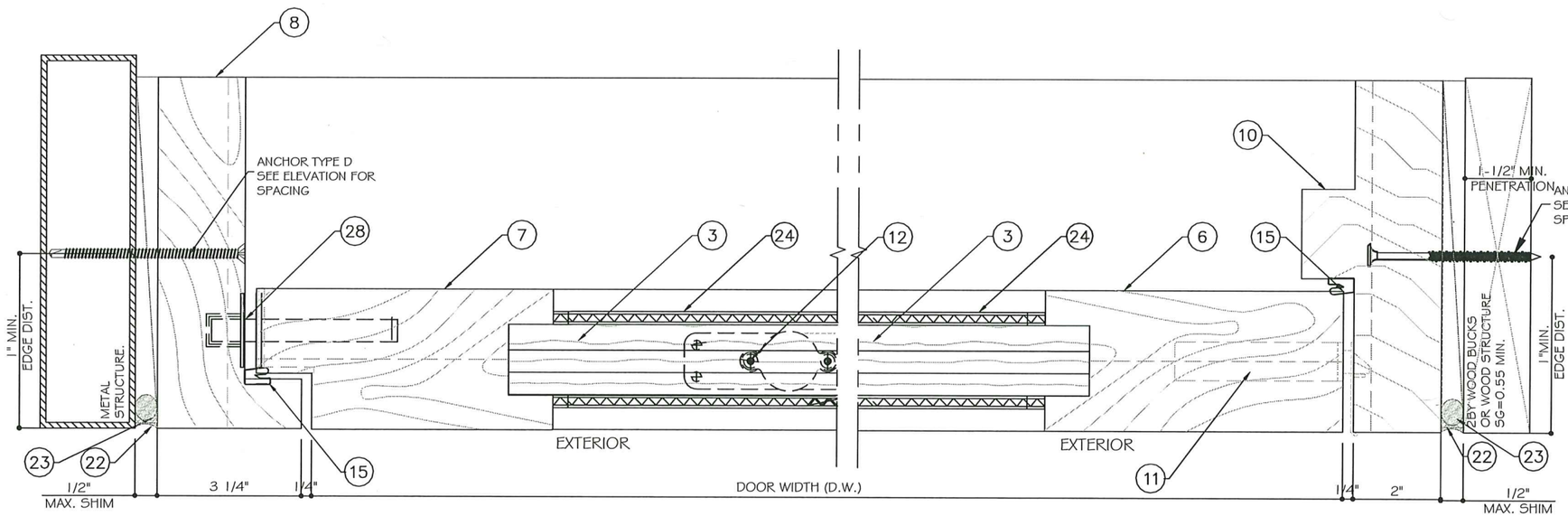

C / D2 DETAIL OPTION

D / D2 DETAIL OPTION

NOTE:
SUBSTRATE SHOWN ON DETAILS IS FOR DEMONSTRATION ONLY. THEY ARE INTERCHANGEABLE.

MIAMI–DADE COUNTY

PRODUCT REVIEWED
as complying with the Florida Building Code
Acceptance No 25-0102.03
Expiration Date 8/16/28
By Ishag I. Chanda
Miami-Dade Product Control

YING WANG, P.E.
FLORIDA REGISTRATION
LIC. #55983
C.A.N. 5[illegible]77
STATE OF FLORIDA
PROFESSIONAL ENGINEER

Feburary 05th, 2025

MCY ENGINEERING, INC.
GLAZING CONSULTANTS
12781 MIRAMAR PARKWAY #301
MIRAMAR, FL 33027 P: 305.271.0117
www.MCYEngineering.com MCY@mcyengineering.com

SINGLE OUTSWING PANEL PIVOT DOOR WOOD DOOR (L.M.I.)

CUSTOM DOORS & CLOSETS, LLC.
15879 NW 4th STREET
PEMBROKE PINES FLORIDA 33028
TEL. 954-999-7149

Rev. No.	Date	Drawn By	Description
R3	01/17/2025	James	REVISION
R2	08.21.2023	James	FBC 2023

Drawn Date 01/17/2025

Scale

DRAWING NO.
AD19–22

D2

Sheet No.
04 OF 08

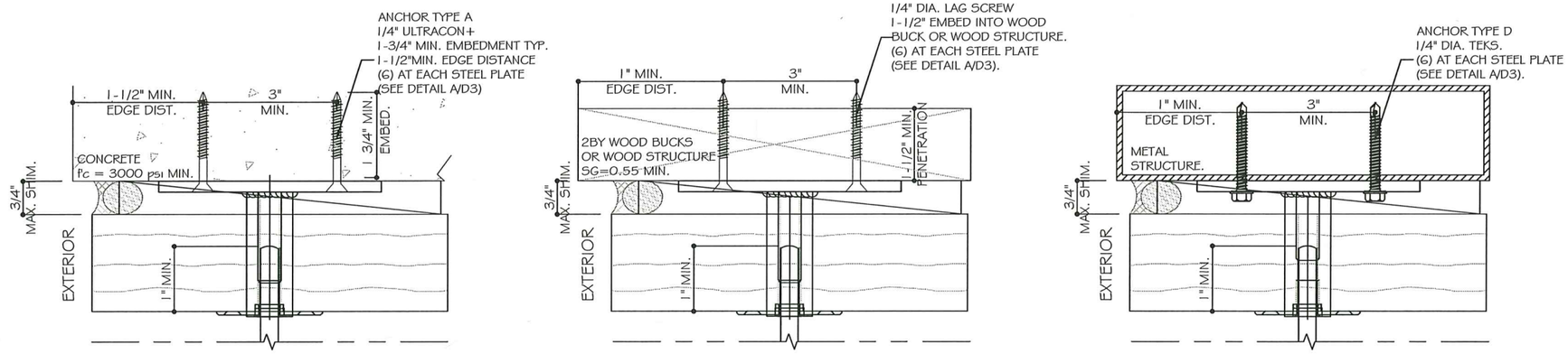

TOP HINGE PIVOT

TYPICAL ANCHORS AT HEAD & SILL & JAMB:

TYPE "A": 1/4" DIA. ULTRACON+ BY 'DEWALT'(Fu = 164 KSI, Fy = 148 KSI)
WITH 1-3/4" MIN. EMBED DIRECTLY INTO f'c=3 KSI CONCRETE.
OR 1-3/4" MIN. EMBED DIRECTLY INTO GROUT FILLED BLOCK (JAMB ONLY).
OR 1-1/4" MIN. EMBED INTO HOLLOW BLOCK (JAMB ONLY).
SEE DETAIL FOR MIN. EDGE DISTANCE.

TYPE "B": 1/4" DIA. LAG SCREW (Fy = 70 KSI)
WITH 1-1/2" PENETRATION INTO WOOD BUCK OR WOOD STRUCTURE, SG=0.55 MIN.
WITH 1" MIN. EDGE DISTANCE.

TYPE "C": 5/16" DIA. ULTRACON BY 'DEWALT' (Fu= 177 KSI, Fy= 155 KSI)
WITH 2" EMBED INTO CONCRETE
3-1/4" MIN. O.C.
AT 3 1/8" MIN. EDGE DISTANCE
(FOR SILL PIVOT ANCHOR SEE DETAIL C/D1)

TYPE "D": 1/4" TEKS OR SELF DRILLING SCREW (GRADE 5, Fu=120KSI,Fy=90KSI.)
DIRECT INTO 1/8" MIN.THK METAL STRUCTURE.
(3) THREADS MIN. PENETRATION BEYOND METAL STRUCTURE.
ASTM A36 MIN. STEEL OR 6063-T5 MIN. ALUMINUM.
(STEEL IN CONTACT WITH ALUMINUM TO BE PAINTED OR PLATED)

NOTE:
WOOD BUCKS/ METAL STRUCTURES BY OTHERS TO BE DESIGNED TO SUPPORT THE LOADS IMPOSED BY THIS SYSTEM AND TO TRANSFER SUCH LOADS TO THE BUILDING MAIN STRUCTURE.

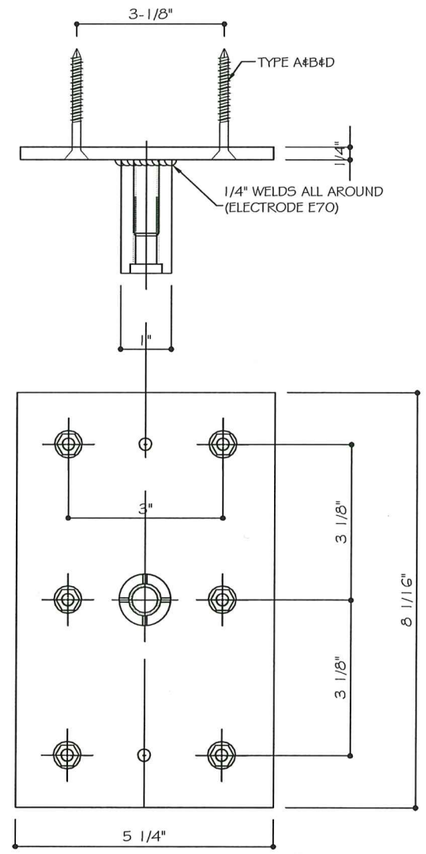

A / D3 STEEL PLATE & BEARING CASE
FOR PIVOT SUPPORT AT TOP
Fu=58ksi Fy=36ksi

MIAMI-DADE COUNTY
PRODUCT REVISED
as complying with the Florida
Building Code
Acceptance No 25-0102.03
Expiration Date 8/16/28
by Ishaq I. Chaudhary
Miami-Dade Product Control

YIRING WANG, P.E.
FLORIDA REGISTRATION
FL #55983
C.A.N. 0[illegible]677
STATE OF FLORIDA
PROFESSIONAL ENGINEER
Feburary 05th, 2025

MCY ENGINEERING, INC.
GLAZING CONSULTANTS
12781 MIRAMAR PARKWAY #301
MIRAMAR, FL 33027 P: 305.271.0117
www.MCYEngineering.com MCY@mcyengineering.com

SINGLE OUTSWING PANEL PIVOT DOOR WOOD DOOR (L.M.I.)
CUSTOM DOORS & CLOSETS, LLC.
15879 NW 4th STREET
PEMBROKE PINES FLORIDA 33028
TEL. 954-999-7149

Rev. No.	Date	Drawn By	Description
R3	01/17/2025	James	REVISION
R2	08.21.2023	James	FBC 2023

Drawn Date 01/17/2025
Scale
DRAWING NO. AD19-22
D3
Sheet No. 05 OF 08

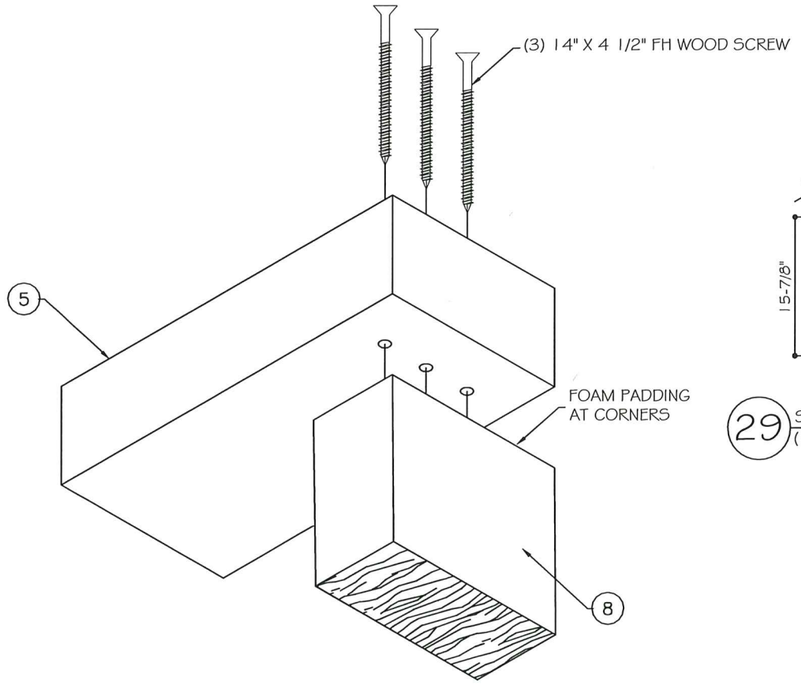

TOP FRAME CORNER CONNECTION

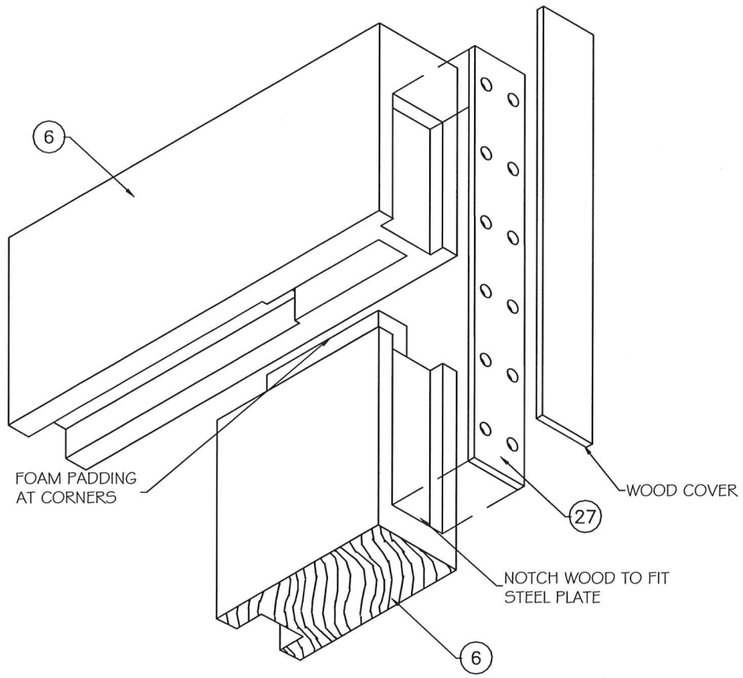

TYPICAL DOOR PANEL CORNER CONNECTION

29 STEEL ANGLE 1/16" THK.
(10)-14X3" FH WOOD SCREW

26 STEEL ANGLE 1/16 " THK.
(10)-14X3" FH WOOD SCREW

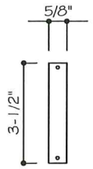

32 STEEL PLATE 1/8" THK.
(2)-8X1-1/4" FH WOOD SCREW

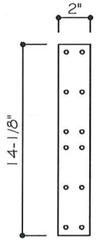

27 STEEL PLATE 1/4" THK.
(12)-14X3" FH WOOD SCREW

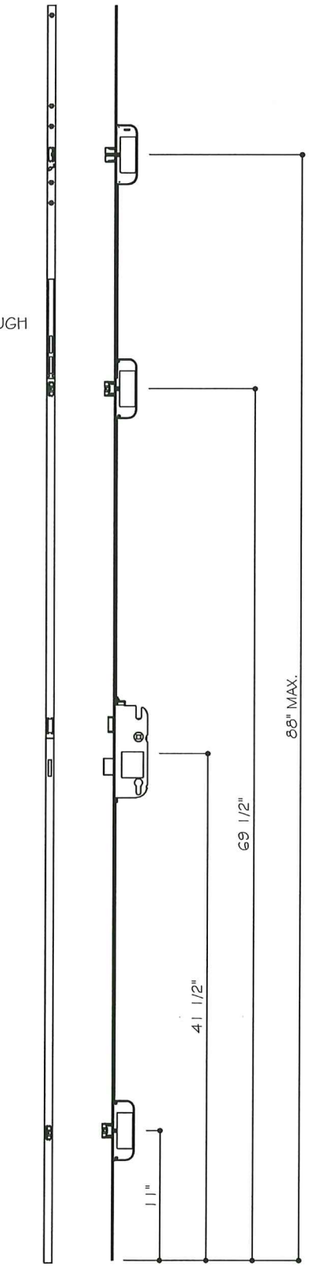

11 GU-SECURITY AUTOMATIC
DOOR LOCK WITH PZ KEY-WAY (STEEL)

LOCK SYSTEM

6-25485 AT-0-1 / 6-34740-01-0-1

MIAMI–DADE COUNTY

PRODUCT REVIEWED
as complying with the Florida
Building Code
Acceptance No. 25-0102.03
Expiration Date 8/16/28
Miami-Dade Product Control

YIRING WANG, P.E.
FLORIDA REGISTRATION
FL #55983
C.A.N. 5[illegible]77
STATE OF FLORIDA
PROFESSIONAL ENGINEER

Feburary 05th, 2025

MCY ENGINEERING, INC.
GLAZING CONSULTANTS
12781 MIRAMAR PARKWAY #301
MIRAMAR, FL 33027 P: 305.271.0117
www.MCYEngineering.com MCY@mcyengineering.com

SINGLE OUTSWING PANEL PIVOT DOOR WOOD DOOR (L.M.I.)

CUSTOM DOORS & CLOSETS, LLC.
15879 NW 4th STREET
PEMBROKE PINES FLORIDA 33028
TEL. 954-999-7149

Rev. No.	Date	Drawn By	Description
R3	01/17/2025	James	REVISION
R2	08.21.2023	James	FBC 2023

Drawn Date 01/17/2025
Scale

DRAWING NO.
AD19–22

D4

Sheet No.
06 OF 08

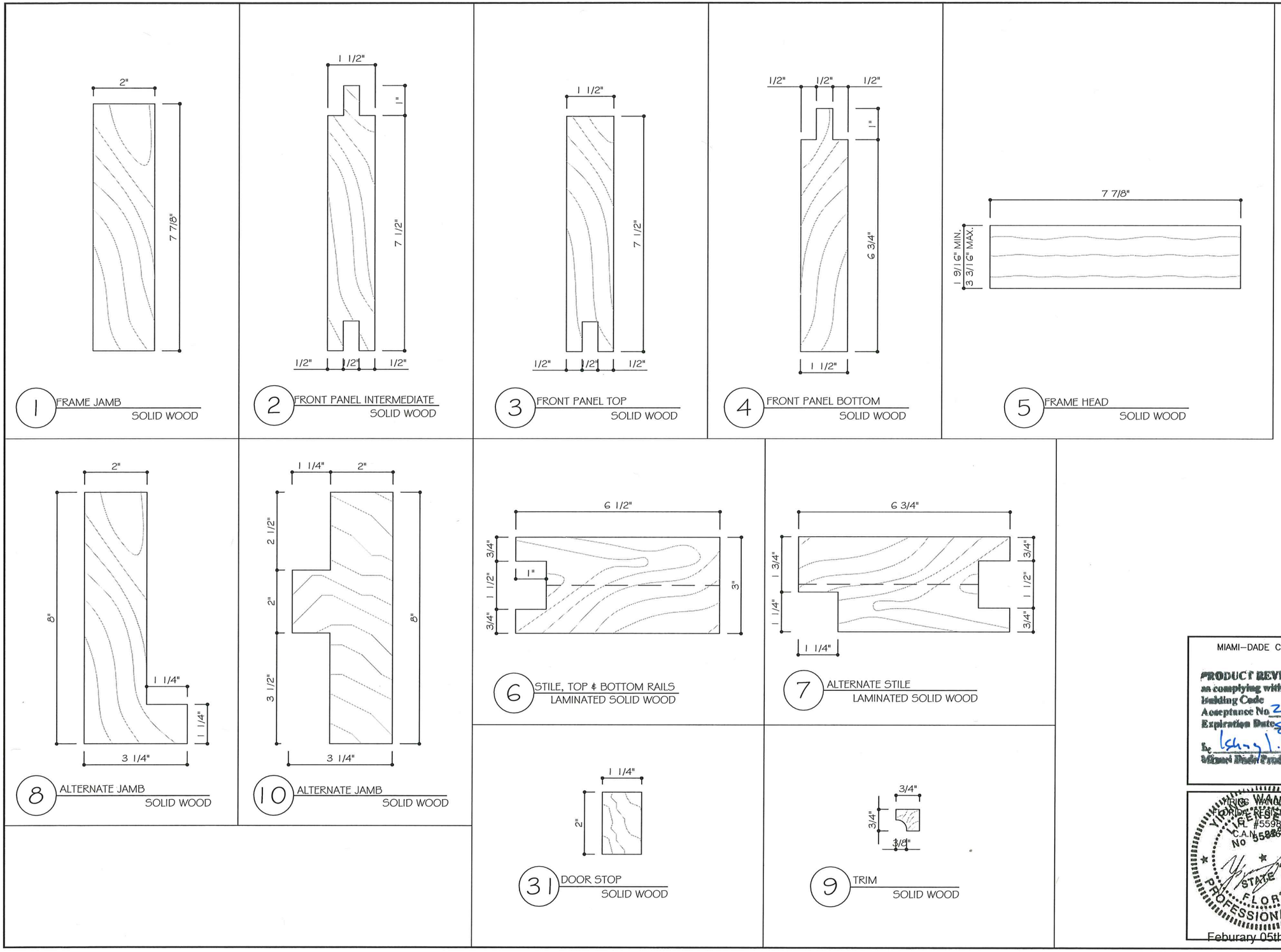

1 FRAME JAMB
SOLID WOOD

2 FRONT PANEL INTERMEDIATE
SOLID WOOD

3 FRONT PANEL TOP
SOLID WOOD

4 FRONT PANEL BOTTOM
SOLID WOOD

5 FRAME HEAD
SOLID WOOD

8 ALTERNATE JAMB
SOLID WOOD

10 ALTERNATE JAMB
SOLID WOOD

6 STILE, TOP & BOTTOM RAILS
LAMINATED SOLID WOOD

7 ALTERNATE STILE
LAMINATED SOLID WOOD

31 DOOR STOP
SOLID WOOD

9 TRIM
SOLID WOOD

MIAMI–DADE COUNTY

PRODUCT REVIEWED
as complying with the Florida
Building Code
Acceptance No. 25-0102.03
Expiration Date 8/16/25
By Ishay I. Chamie
Miami Dade Product Control

YIRING WANG, P.E.
FLORIDA REGISTRATION
#55983
C.A.N. 55677
STATE OF FLORIDA
PROFESSIONAL ENGINEER
Feburary 05th, 2025

MCY ENGINEERING, INC.
GLAZING CONSULTANTS
12781 MIRAMAR PARKWAY #301
MIRAMAR, FL 33027 P: 305.271.0117
www.MCYEngineering.com MCY@mcyengineering.com

SINGLE OUTSWING PANEL PIVOT DOOR WOOD DOOR (L.M.I.)
CUSTOM DOORS & CLOSETS, LLC.
15879 NW 4th STREET
PEMBROKE PINES FLORIDA 33028
TEL. 954-999-7149

Rev. No.	Date	Drawn By	Description
R3	01/17/2025	James	REVISION
R2	08.21.2023	James	FBC 2023

Drawn Date 01/17/2025
Scale

DRAWING NO.
AD19–22

PARTS

Sheet No.
07 OF 08

BILL OF MATERIALS

ITEM	DESCRIPTION	MATERIAL	MANUF. / REMARKS
1	FRAME JAMB	SOLID WOOD (SEE NOTE ON SHEET 01)	SG=0.45 MIN.
2	FRONT PANELS	SOLID WOOD (SEE NOTE ON SHEET 01)	SG=0.45 MIN.
3	FRONT PANELS	SOLID WOOD (SEE NOTE ON SHEET 01)	SG=0.45 MIN.
4	FRONT PANELS	SOLID WOOD (SEE NOTE ON SHEET 01)	SG=0.45 MIN.
5	FRAME HEAD	SOLID WOOD (SEE NOTE ON SHEET 01)	SG=0.45 MIN.
6	STILE, TOP & BOTTOM RAIL	SOLID WOOD (SEE NOTE ON SHEET 01)	SG=0.45 MIN.
7	ALTERNATE STILE	SOLID WOOD (SEE NOTE ON SHEET 01)	SG=0.45 MIN.
8	ALTERNATE JAMB	SOLID WOOD (SEE NOTE ON SHEET 01)	SG=0.45 MIN.
9	TRIM	SOLID WOOD (SEE NOTE ON SHEET 01)	SG=0.45 MIN.
10	ALTERNATE JAMB 1	SOLID WOOD (SEE NOTE ON SHEET 01)	SG=0.45 MIN.
11	GU-SECURITY AUTOMATIC DOOR LOOK WITH PZ KEY-WAY	STAINLESS STEEL	-
12	FRITSJURGENS BOTTOM PIVOT DOOR HINGES SYSTEM 1	STAINLESS STEEL	-
13	FRITSJURGENS TOP PIVOT DOOR HINGES SYSTEM 1	STAINLESS STEEL	-
14	PEMPKO 234 DOOR TOP/BOTTOM	ALUMINUM 6063-T6	-
15	Q-LON QDST675 DOOR SEAL (ADHESIVE BACKED)	POLYETHYLENE CLAD URETHANE FOAM	-
16	ALUMINUM DRAIN 2"X 2"X 1/8" / 1/2"X 1/2"X 1/8"	ALUMINUM 6063-T6	-
17	PEMKO DROPDOWN PDB41 1 AE (FULL TOP & BOTTOM RAIL)	RUBBER	-
18	FRITSJURGENS FLOOR MOUNTING PLATE 400601 VP 80*20 400501 VP	STAINLESS STEEL ASTM-A36	-
18A	85X52-B01 RVS		
19	STEEL PLATE & BEARING CASE FOR PIVOT SUPPORT	A36 (Fu=58ksi , Fy=36ksi)	-
22	DOW CORNING 791 WEATHERPROOFING SEALANT	SILICONE	DOW CORNING
23	BACKER ROD (DIAMETER AS REQUIRED)	FOAM	-
24	DECORATIVE CLAD WOOD OR METAL CLAD PANEL SURFACES MOUNTED OPTION	WOOD OR METAL	GLUED AND NAILED
26	STEEL ANGLE 12 1/8" X 2" X 2"	A36 (Fu=58ksi , Fy=36ksi)	-
27	STEEL PLATE1/4" THK 14 1/8" X 2"	A36 (Fu=58ksi , Fy=36ksi)	-
28	JAKO SIDE FLUSH BOLT	STAIN NICKEL	-
29	STEEL ANGLE 15 7/8" X 1 1/4" X 2"	A36 (Fu=58ksi , Fy=36ksi)	-
30	TOP PIVOT CEILING PLATE	A36 (Fu=58ksi , Fy=36ksi)	-
31	DOORSTOP(FASTENED WITH TIBONE III GLUE AND #12 WOOD SCREWS)	SOLID WOOD (SEE NOTE ON SHEET 01)	SG=0.45 MIN.
32	STEEL PLATE 1/8" THK 31/2" X5/8"	STAINLESS STEEL ASTM-A36	-
33	#6 x 5/8" FHSMS PHILLIPS (PROVIDE BY MANUFACTURER)	STEEL	-

MIAMI–DADE COUNTY

PRODUCT REVIEWED
as complying with the Florida Building Code
Acceptance No. 25-0102.03
Expiration Date 5/16/28
By Yi Wang
My Mr. Dade Product Control

YI WANG, P.E.
FLORIDA REGISTRATION
P.E. #55983
C.A. No 35887
STATE OF FLORIDA
PROFESSIONAL ENGINEER

Feburary 05th, 2025

MCY ENGINEERING, INC.
GLAZING CONSULTANTS
12781 MIRAMAR PARKWAY #301
MIRAMAR, FL. 33027 P: 305.271.0117
www.MCYEngineering.com MCY@mcyengineering.com

SINGLE OUTSWING PANEL PIVOT DOOR WOOD DOOR (L.M.I.)

CUSTOM DOORS & CLOSETS, LLC.
15879 NW 4th STREET
PEMBROKE PINES FLORIDA 33028
TEL. 954-999-7149

Rev. No.	Date	Drawn By	Description
R3	01/17/2025	James	REVISION
R2	08.21.2023	James	FBC 2023

Drawn Date 01/17/2025 | Scale

DRAWING NO.
AD19–22

BOM

Sheet No.
08 OF 08