TRUSSCORP INTERNATIONAL INC.

ENGINEERING COVER SHEET

This cover sheet is provided as per Florida Statute 61G15-23.001, F.A.C. in lieu signing and sealing each individual sheet. An index sheet of the quantity of truss designs specified below is attached with the identification and date of each drawing.

Quantity of Truss Designs: **7**

SPRINGS CONST - 12805 SW 69 CT

Building Authority: **PINECREST, FL**

Design Loads:
Roof: 30-15-0-10 psf.
Wind: 175 mph
Exposure: C
Kd: .85
HVHZ
DOL: Plate: 1.33 Lumber: 1.33

Building Code: FBC 2023/ TPI 2014 / ASCE 7-22

Software Used: MITEK 2023 v 8.7

Attachments: Truss placement diagram, Truss profile list, product approvals, Valley detail, web bracing recommendation.

Engineer of Truss Design Package:

ULTIMATE ENGINEERING DESIGNS INC.
9590 N.W. 89th Avenue
MEDLEY, FL 33178
PHONE: (305) 882-8826 (Office)
ARMANDO R. PEREZ. P.E. 28026

ARMANDO R. PEREZ LICENSE No 28026 STATE OF FLORIDA PROFESSIONAL ENGINEER

This item has been digitally Signed and Sealed by Armando R. Perez, P.E. 28026 on the date adjacent to the seal .

Printed copies of this document are not considered Signed and Sealed and the signature must be verified on any electronic copies.

ARMANDO R. PEREZ P.E. 28026
9590 NW 89 AVE MEDLEY, FL 33178
PH: 305-882-8826

Armando R Perez

Digitally signed by Armando R Perez
Date: 2025.10.10 23:40:54 -04'00'

^

Trusscorp International, Inc.
9590 NW 8th Ave
Medley, FL 33178
(305) 882-8826 Fax: (305) 887-6008

To:

,

Reaction

Job Number: **B2500274**
Page: 1
Date: 09/22/25 15:38:02

Project:
Model:
Block No:
Lot No:

Contact:
Site:
Office:
Name:
Phone:
Fax: .F.

Deliver To:

Account No: 254504030
Designer: /
Salesperson: Inside Sales
Quote Number: B2500274
P.O. Number:

	Qty:	Truss Id:	Span:	Truss Type:	Slope	Reactions:
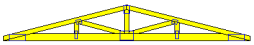	1	**GT1**	**15-08-00**	COMMON	**3.00**	Joint 1: 5560.30, -2855.61 Joint 5: 5397.72, -2786.42
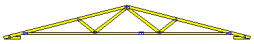	11	**T1**	**24-08-00**	COMMON	**3.00**	Joint 2: 1532.35, -1115.97 Joint 6: 1532.35, -1115.97
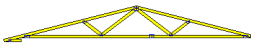	8	**T2**	**24-08-00**	COMMON	**3.00**	Joint 2: 1539.30, -1140.96 Joint 6: 1349.72, -899.58
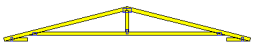	5	**T3**	**15-08-00**	COMMON	**3.00**	Joint 2: 1037.35, -1093.17 Joint 4: 1037.35, -1093.17
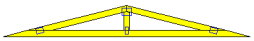	1	**V12**	**12-00-00**	VALLEY	**3.00**	Joint 1: 233.65, -321.85 Joint 3: 233.65, -321.85 Joint 4: 611.75, -701.90
	1	**V4**	**04-00-00**	GABLE	**0.00**	Joint 1: 43.33 Joint 2: 43.33
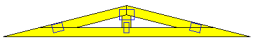	1	**V8**	**08-00-00**	VALLEY	**3.00**	Joint 1: 149.81, -294.37 Joint 3: 149.81, -294.37 Joint 4: 319.76, -520.36

SHOP DRAWING REVIEW

studio jpa

- [x] Reviewed - No Exemption Taken
- [ ] Reviewed - Exemptions Noted
- [ ] Reviewed - Resubmit as Noted
- [ ] Reviewed - Rejected
- [ ] Not Reviewed - Outside of Scope

By: Jorge I. Perez, AIA

Date: October 6, 2025

This review is only to verify for conformance with the design concept of the project and general compliance with the information given in the Contract Documents. Corrections or comments made on the shop drawings during this review do not relieve the Contractor to comply with the requirements presented in the plans and specifications. The Contractor is responsible for: confirming and correlating quantities and dimensions at the job site; selecting means, methods, techniques, sequences, and procedures of construction; coordination and performing of this work with other trades; compliance with the contrator's construction schedule; performing all work in a safe and satisfactory manner. Approval of a specific item shall not include approval of an assembly of which the item is a component.

Job	Truss	Truss Type	Qty	Ply	12805 SW 69 CT PINECREST, FL
12805	GT1	COMMON GIRDER	1	2	Job Reference (optional)

Trusscorp Int., 9590 NW 89 AVE, Medley, FL

8.820 s Dec 4 2024 MiTek Industries, Inc. Mon Sep 22 15:23:31 2025 Page 1
ID:csSo67mhGC_yYES62lOYJlyb5ew-ATBwesJlV_ZvodZ4SiDN0xvP_5gmGHRLQ4R__Byb2jA

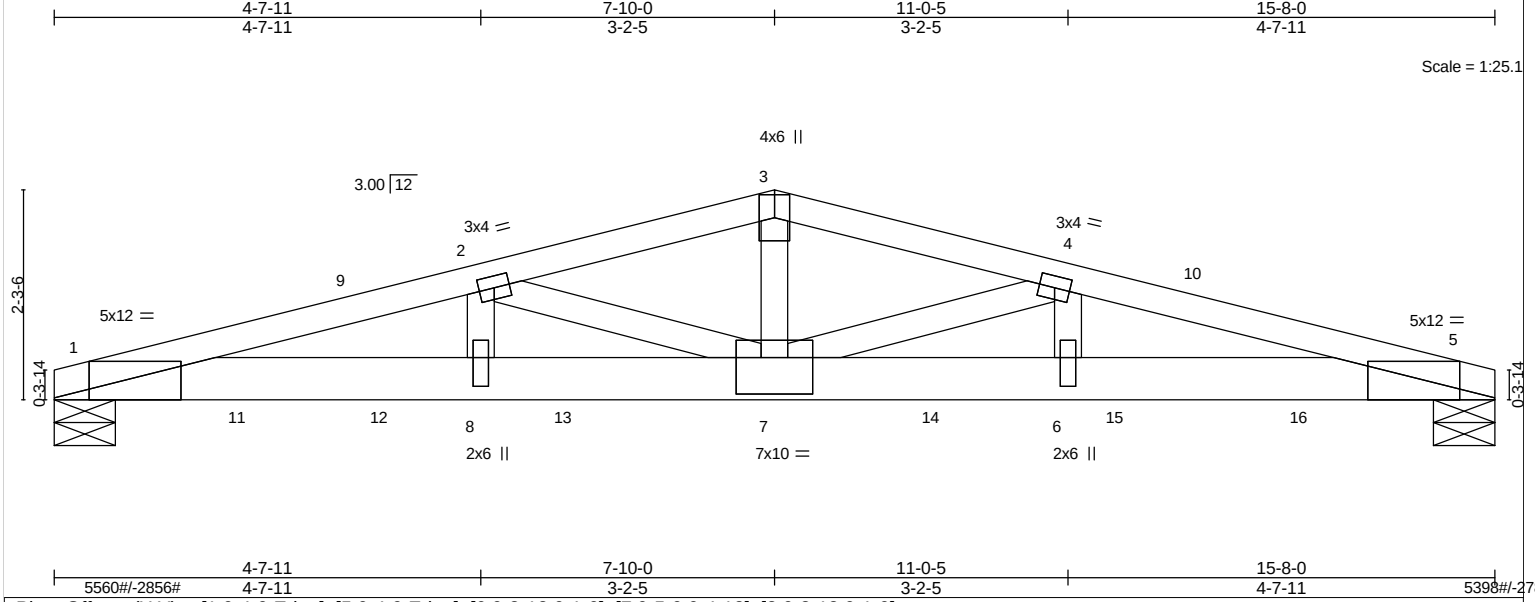

Plate Offsets (X,Y)-- [1:0-4-9,Edge], [5:0-4-9,Edge], [6:0-3-12,0-1-0], [7:0-5-0,0-4-12], [8:0-3-12,0-1-0]

LOADING (psf)		SPACING-	2-0-0	CSI.		DEFL.	in	(loc)	l/defl	L/d	PLATES	GRIP
TCLL	30.0	Plate Grip DOL	1.33	TC	0.94	Vert(LL)	0.32	6-7	>563	360	MT20	244/190
TCDL	15.0	Lumber DOL	1.33	BC	0.84	Vert(CT)	-0.51	6-7	>356	180		
BCLL	0.0	Rep Stress Incr	NO	WB	1.00	Horz(CT)	0.09	5	n/a	n/a		
BCDL	10.0	Code FBC2023/TPI2014		Matrix-SH							Weight: 149 lb	FT = 0%

LUMBER-
TOP CHORD 2x4 SP No.1
BOT CHORD 2x6 SP 2400F 2.0E
WEBS 2x4 SP No.3

BRACING-
TOP CHORD Structural wood sheathing directly applied or 1-10-13 oc purlins.
BOT CHORD Rigid ceiling directly applied or 7-8-15 oc bracing.

REACTIONS. (lb/size) 1=5560/0-8-0 (min. 0-2-5), 5=5398/0-8-0 (min. 0-2-4)
Max Uplift1=-2856(LC 4), 5=-2786(LC 4)

FORCES. (lb) - Max. Comp./Max. Ten. - All forces 250 (lb) or less except when shown.
TOP CHORD 1-9=-16251/8171, 2-9=-16194/8175, 2-3=-12481/6320, 3-4=-12481/6319, 4-10=-16007/8095, 5-10=-16064/8091
BOT CHORD 1-11=-7831/15701, 11-12=-7831/15701, 8-12=-7831/15701, 8-13=-7831/15701, 7-13=-7831/15701, 7-14=-7753/15518, 6-14=-7753/15518, 6-15=-7753/15518, 15-16=-7753/15518, 5-16=-7753/15518
WEBS 3-7=-2667/5575, 4-7=-3680/1929, 4-6=-848/1945, 2-7=-3874/2012, 2-8=-890/2043

NOTES- (9-10)
1) 2-ply truss to be connected together with 16d (0.131"x 3.5") nails as follows:
Top chords connected as follows: 2x4 - 1 row at 0-7-0 oc clinched.
Bottom chords connected as follows: 2x6 - 2 rows staggered at 0-6-0 oc clinched.
Webs connected as follows: 2x4 - 1 row at 0-9-0 oc clinched.
2) All loads are considered equally applied to all plies, except if noted as front (F) or back (B) face in the LOAD CASE(S) section. Ply to ply connections have been provided to distribute only loads noted as (F) or (B), unless otherwise indicated.
3) Unbalanced roof live loads have been considered for this design.
4) Wind: ASCE 7-22; Vult=175mph (3-second gust) Vasd=136mph; HVHZ; TCDL=5.0psf; BCDL=5.0psf; h=15ft; Cat. II; Exp C; Encl., GCpi=0.18; C-C Zone3 0-4-0 to 3-4-0, Zone2 3-4-0 to 12-4-0, Zone3 12-4-0 to 15-4-0; Lumber DOL=1.60 plate grip DOL=1.60
5) Building Designer / Project engineer responsible for verifying applied roof live load shown covers rain loading requirements specific to the use of this truss component.
6) This truss has been designed for a 10.0 psf bottom chord live load nonconcurrent with any other live loads.
7) Provide mechanical connection (by others) of truss to bearing plate capable of withstanding 2856 lb uplift at joint 1 and 2786 lb uplift at joint 5.
8) Hanger(s) or other connection device(s) shall be provided sufficient to support concentrated load(s) 1330 lb down and 576 lb up at 2-0-12, 1330 lb down and 576 lb up at 3-7-4, 1330 lb down and 576 lb up at 5-7-4, 1330 lb down and 576 lb up at 7-7-4, 1330 lb down and 576 lb up at 9-7-4, and 1330 lb down and 576 lb up at 11-7-4, and 1330 lb down and 576 lb up at 13-7-4 on bottom chord. The design/selection of such connection device(s) is the responsibility of others.
9) All truss to truss connection by TCI are on the Truss Placement plan.
10) ARMANDO R. PEREZ PE. # 28026 Ph: (305) 882-8826

LOAD CASE(S) Standard
1) Dead + Roof Live (balanced): Lumber Increase=1.33, Plate Increase=1.33
Uniform Loads (plf)
Vert: 1-3=-90, 3-5=-90, 1-5=-20
Concentrated Loads (lb)
Vert: 7=-1330(B) 11=-1330(B) 12=-1330(B) 13=-1330(B) 14=-1330(B) 15=-1330(B) 16=-1330(B)

Job	Truss	Truss Type	Qty	Ply	12805 SW 69 CT PINECREST, FL
12805	T1	Common	11	1	Job Reference (optional)

Trusscorp Int., 9590 NW 89 AVE, Medley, FL

8.820 s Dec 4 2024 MiTek Industries, Inc. Mon Sep 22 15:23:33 2025 Page 1
ID:csSo67mhGC_yYES62lOYJlyb5ew-6rJg2YL01bpd1xjSa6Fr6M_phvNqkL3euOw534yb2j8

-1-11-0	6-8-8	12-4-0	17-11-8	24-8-0	26-7-0
1-11-0	6-8-8	5-7-8	5-7-8	6-8-8	1-11-0

Scale = 1:46.9

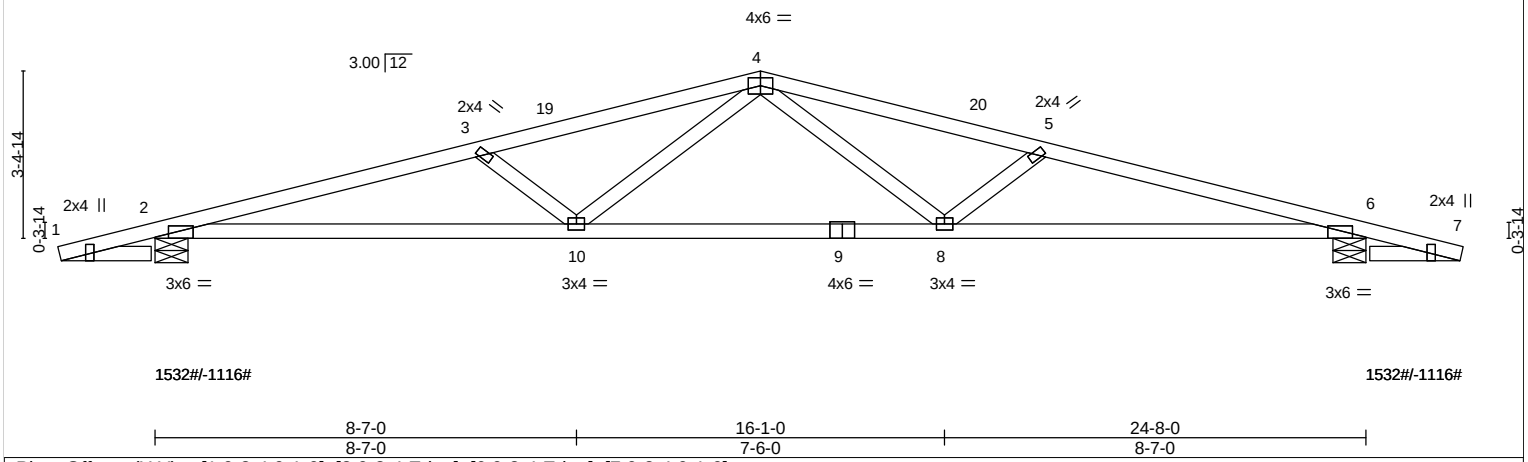

8-7-0	16-1-0	24-8-0
8-7-0	7-6-0	8-7-0

Plate Offsets (X,Y)-- [1:0-2-4,0-1-0], [2:0-3-4,Edge], [6:0-3-4,Edge], [7:0-2-4,0-1-0]

LOADING (psf)		**SPACING-**	2-0-0	**CSI.**		**DEFL.**	in	(loc)	l/defl	L/d	**PLATES**	**GRIP**
TCLL	30.0	Plate Grip DOL	1.33	TC	0.67	Vert(LL)	-0.29	8-10	>999	360	MT20	244/190
TCDL	15.0	Lumber DOL	1.33	BC	0.74	Vert(CT)	-0.56	8-10	>531	180		
BCLL	0.0	Rep Stress Incr	YES	WB	0.35	Horz(CT)	0.11	6	n/a	n/a		
BCDL	10.0	Code FBC2023/TPI2014		Matrix-AS							Weight: 107 lb	FT = 0%

LUMBER-
TOP CHORD 2x4 SP No.2
BOT CHORD 2x4 SP No.1
WEBS 2x4 SP No.3
OTHERS 2x4 SP No.3

BRACING-
TOP CHORD Structural wood sheathing directly applied.
BOT CHORD Rigid ceiling directly applied.

MiTek recommends that Stabilizers and required cross bracing be installed during truss erection, in accordance with Stabilizer Installation guide.

REACTIONS. (lb/size) 2=1532/0-8-0 (min. 0-1-13), 6=1532/0-8-0 (min. 0-1-13)
Max Uplift2=-1116(LC 4), 6=-1116(LC 4)

FORCES. (lb) - Max. Comp./Max. Ten. - All forces 250 (lb) or less except when shown.
TOP CHORD 2-3=-4086/2232, 3-19=-3573/1961, 4-19=-3506/1971, 4-20=-3506/1971, 5-20=-3573/1961, 5-6=-4086/2232
BOT CHORD 2-10=-1991/3928, 9-10=-1379/2673, 8-9=-1379/2673, 6-8=-1991/3928
WEBS 4-8=-330/977, 5-8=-708/462, 4-10=-330/977, 3-10=-708/462

NOTES- (7-8)
1) Unbalanced roof live loads have been considered for this design.
2) Wind: ASCE 7-22; Vult=175mph (3-second gust) Vasd=136mph; HVHZ; TCDL=5.0psf; BCDL=5.0psf; h=15ft; Cat. II; Exp C; Encl., GCpi=0.18; C-C Zone3 -1-11-7 to 1-1-0, Zone1 1-1-0 to 8-1-1, Zone2 8-1-1 to 16-6-15, Zone1 16-6-15 to 23-7-0, Zone3 23-7-0 to 26-7-7; Lumber DOL=1.60 plate grip DOL=1.60
3) Building Designer / Project engineer responsible for verifying applied roof live load shown covers rain loading requirements specific to the use of this truss component.
4) This truss has been designed for a 10.0 psf bottom chord live load nonconcurrent with any other live loads.
5) Provide mechanical connection (by others) of truss to bearing plate capable of withstanding 1116 lb uplift at joint 2 and 1116 lb uplift at joint 6.
6) This truss design requires that a minimum of 7/16" structural wood sheathing be applied directly to the top chord and 1/2" gypsum sheetrock be applied directly to the bottom chord.
7) All truss to truss connection by TCI are on the Truss Placement plan.
8) ARMANDO R. PEREZ PE. # 28026 Ph: (305) 882-8826

LOAD CASE(S) Standard

Job	Truss	Truss Type	Qty	Ply	12805 SW 69 CT PINECREST, FL
12805	T2	Common	8	1	Job Reference (optional)

Trusscorp Int., 9590 NW 89 AVE, Medley, FL

8.820 s Dec 4 2024 MiTek Industries, Inc. Mon Sep 22 15:23:35 2025 Page 1
ID:csSo67mhGC_yYES62lOYJlyb5ew-3EQRTEMGZD4LHEsrhXHJBn370i2BCFHwLiPC7zyb2j6

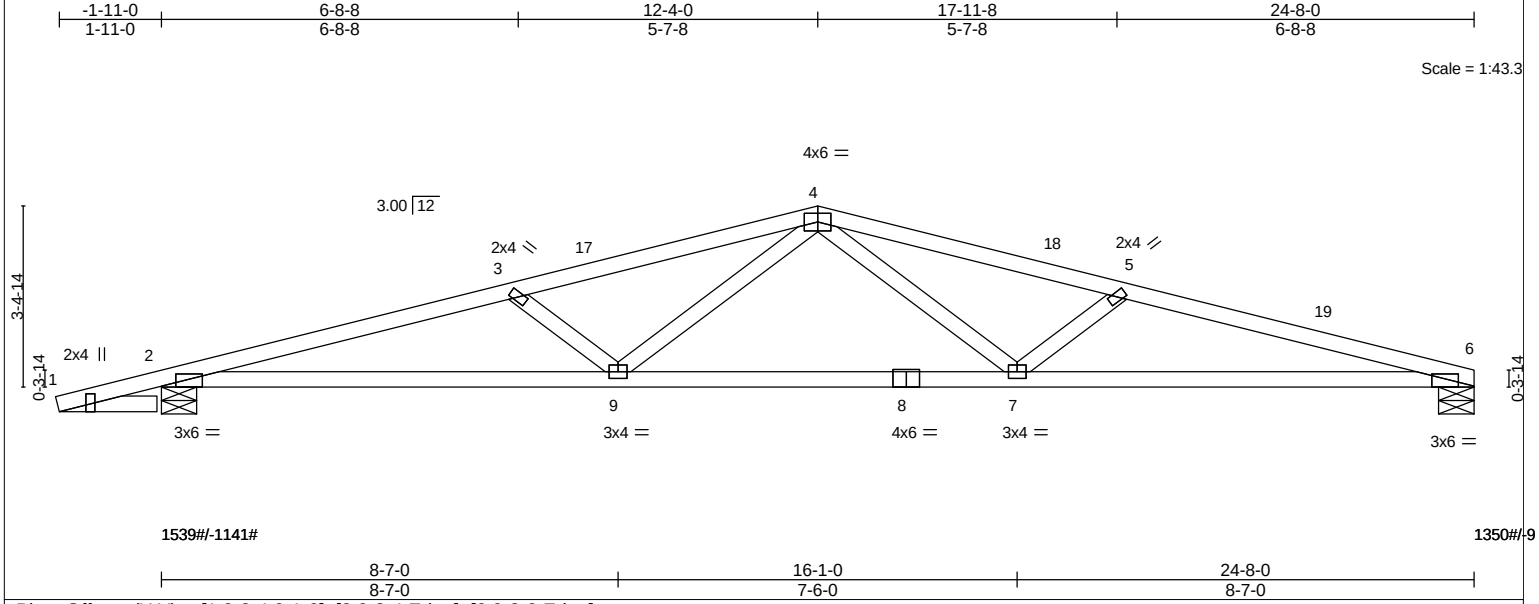

Plate Offsets (X,Y)-- [1:0-2-4,0-1-0], [2:0-3-4,Edge], [6:0-3-0,Edge]

LOADING (psf)		**SPACING-**	2-0-0	**CSI.**		**DEFL.**	in	(loc)	l/defl	L/d	**PLATES**	**GRIP**
TCLL	30.0	Plate Grip DOL	1.33	TC	0.81	Vert(LL)	-0.29	7-9	>999	360	MT20	244/190
TCDL	15.0	Lumber DOL	1.33	BC	0.81	Vert(CT)	-0.56	7-9	>532	180		
BCLL	0.0	Rep Stress Incr	YES	WB	0.37	Horz(CT)	0.11	6	n/a	n/a		
BCDL	10.0	Code FBC2023/TPI2014		Matrix-AS							Weight: 102 lb	FT = 0%

LUMBER-
TOP CHORD 2x4 SP No.2
BOT CHORD 2x4 SP No.1
WEBS 2x4 SP No.3
OTHERS 2x4 SP No.3

BRACING-
TOP CHORD Structural wood sheathing directly applied.
BOT CHORD Rigid ceiling directly applied.

MiTek recommends that Stabilizers and required cross bracing be installed during truss erection, in accordance with Stabilizer Installation guide.

REACTIONS. (lb/size) 6=1350/0-8-0 (min. 0-1-9), 2=1539/0-8-0 (min. 0-1-13)
Max Horz 2=53(LC 4)
Max Uplift6=-900(LC 4), 2=-1141(LC 4)

FORCES. (lb) - Max. Comp./Max. Ten. - All forces 250 (lb) or less except when shown.
TOP CHORD 2-3=-4112/2329, 3-17=-3598/2054, 4-17=-3532/2064, 4-18=-3575/2218, 5-18=-3642/2205, 5-19=-4140/2546, 6-19=-4173/2537
BOT CHORD 2-9=-2137/3954, 8-9=-1532/2701, 7-8=-1532/2701, 6-7=-2365/4017
WEBS 4-7=-506/1026, 5-7=-738/574, 4-9=-317/975, 3-9=-709/468

NOTES- (7-8)
1) Unbalanced roof live loads have been considered for this design.
2) Wind: ASCE 7-22; Vult=175mph (3-second gust) Vasd=136mph; HVHZ; TCDL=5.0psf; BCDL=5.0psf; h=15ft; Cat. II; Exp C; Encl., GCpi=0.18; C-C Zone3 -1-11-7 to 1-1-0, Zone1 1-1-0 to 8-1-1, Zone2 8-1-1 to 16-6-15, Zone1 16-6-15 to 21-8-0, Zone3 21-8-0 to 24-8-0; Lumber DOL=1.60 plate grip DOL=1.60
3) Building Designer / Project engineer responsible for verifying applied roof live load shown covers rain loading requirements specific to the use of this truss component.
4) This truss has been designed for a 10.0 psf bottom chord live load nonconcurrent with any other live loads.
5) Provide mechanical connection (by others) of truss to bearing plate capable of withstanding 900 lb uplift at joint 6 and 1141 lb uplift at joint 2.
6) This truss design requires that a minimum of 7/16" structural wood sheathing be applied directly to the top chord and 1/2" gypsum sheetrock be applied directly to the bottom chord.
7) All truss to truss connection by TCI are on the Truss Placement plan.
8) ARMANDO R. PEREZ PE. # 28026 Ph: (305) 882-8826

LOAD CASE(S) Standard

Job	Truss	Truss Type	Qty	Ply	12805 SW 69 CT PINECREST, FL
12805	T3	Common	5	1	Job Reference (optional)

Trusscorp Int., 9590 NW 89 AVE, Medley, FL

8.820 s Dec 4 2024 MiTek Industries, Inc. Mon Sep 22 15:23:37 2025 Page 1
ID:csSo67mhGC_yYES62lOYJlyb5ew-?dYBuvOW5qK2WY0DpyKnGC9SaWkOgCQDp0uICryb2j4

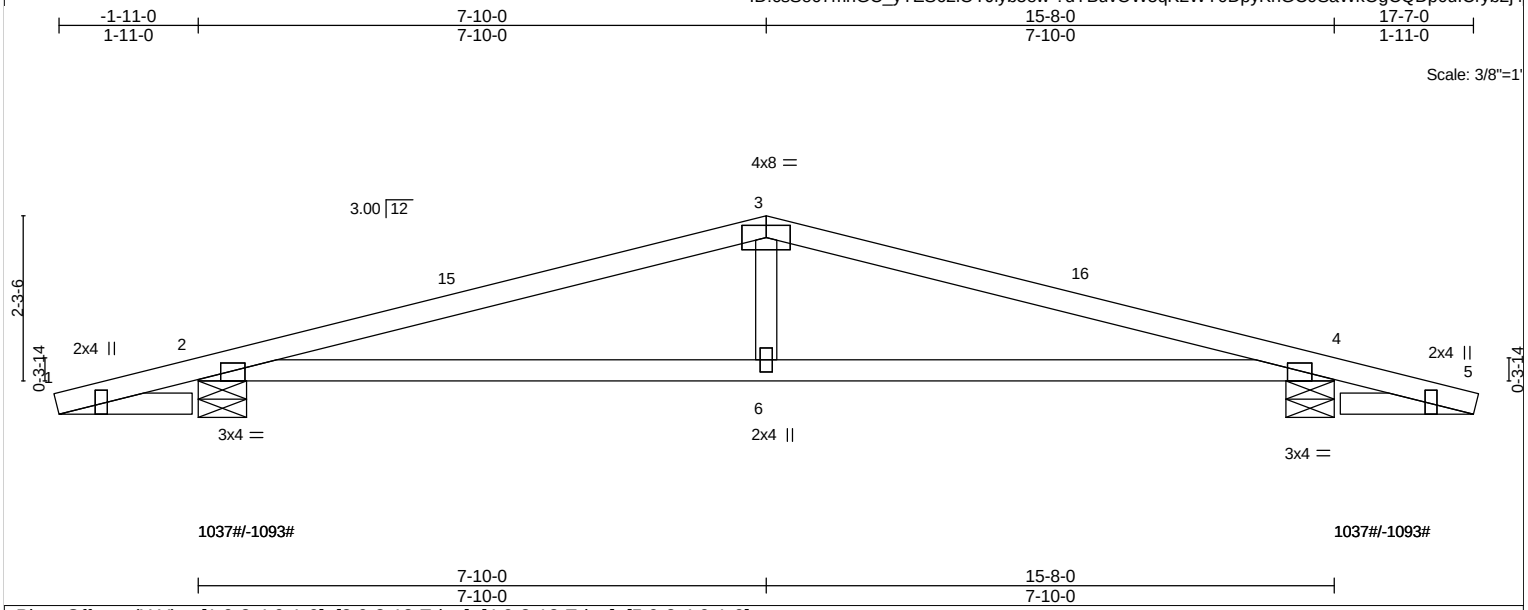

Plate Offsets (X,Y)-- [1:0-2-4,0-1-0], [2:0-3-12,Edge], [4:0-3-12,Edge], [5:0-2-4,0-1-0]

LOADING (psf)		**SPACING-**	2-0-0	**CSI.**		**DEFL.**	in	(loc)	l/defl	L/d	**PLATES**	**GRIP**
TCLL	30.0	Plate Grip DOL	1.33	TC	0.86	Vert(LL)	-0.17	6-11	>999	360	MT20	244/190
TCDL	15.0	Lumber DOL	1.33	BC	0.82	Vert(CT)	-0.31	6-11	>606	180		
BCLL	0.0	Rep Stress Incr	YES	WB	0.13	Horz(CT)	0.04	4	n/a	n/a		
BCDL	10.0	Code FBC2023/TPI2014		Matrix-AS							Weight: 61 lb	FT = 0%

LUMBER-
TOP CHORD 2x4 SP No.2
BOT CHORD 2x4 SP No.2
WEBS 2x4 SP No.3
OTHERS 2x4 SP No.3

BRACING-
TOP CHORD Structural wood sheathing directly applied.
BOT CHORD Rigid ceiling directly applied.

MiTek recommends that Stabilizers and required cross bracing be installed during truss erection, in accordance with Stabilizer Installation guide.

REACTIONS. (lb/size) 2=1037/0-8-0 (min. 0-1-8), 4=1037/0-8-0 (min. 0-1-8)
Max Uplift2=-1093(LC 4), 4=-1093(LC 4)

FORCES. (lb) - Max. Comp./Max. Ten. - All forces 250 (lb) or less except when shown.
TOP CHORD 2-15=-1992/1561, 3-15=-1943/1571, 3-16=-1943/1571, 4-16=-1992/1561
BOT CHORD 2-6=-1303/1885, 4-6=-1303/1885
WEBS 3-6=0/352

NOTES- (7-8)
1) Unbalanced roof live loads have been considered for this design.
2) Wind: ASCE 7-22; Vult=175mph (3-second gust) Vasd=136mph; HVHZ; TCDL=5.0psf; BCDL=5.0psf; h=15ft; Cat. II; Exp C; Encl., GCpi=0.18; C-C Zone3 -1-11-7 to 1-1-0, Zone1 1-1-0 to 3-7-1, Zone2 3-7-1 to 12-0-15, Zone1 12-0-15 to 14-7-0, Zone3 14-7-0 to 17-7-7; Lumber DOL=1.60 plate grip DOL=1.60
3) Building Designer / Project engineer responsible for verifying applied roof live load shown covers rain loading requirements specific to the use of this truss component.
4) This truss has been designed for a 10.0 psf bottom chord live load nonconcurrent with any other live loads.
5) Provide mechanical connection (by others) of truss to bearing plate capable of withstanding 1093 lb uplift at joint 2 and 1093 lb uplift at joint 4.
6) This truss design requires that a minimum of 7/16" structural wood sheathing be applied directly to the top chord and 1/2" gypsum sheetrock be applied directly to the bottom chord.
7) All truss to truss connection by TCI are on the Truss Placement plan.
8) ARMANDO R. PEREZ PE. # 28026 Ph: (305) 882-8826

LOAD CASE(S) Standard

Job	Truss	Truss Type	Qty	Ply	12805 SW 69 CT PINECREST, FL
12805	V4	GABLE	1	1	Job Reference (optional)

Trusscorp Int., 9590 NW 89 AVE, Medley, FL

8.820 s Dec 4 2024 MiTek Industries, Inc. Mon Sep 22 15:23:38 2025 Page 1
ID:csSo67mhGC_yYES62lOYJlyb5ew-Tp6Z6FO8r8Sv8ibQNgr0pPhqqwG9PgmN1geskHyb2j3

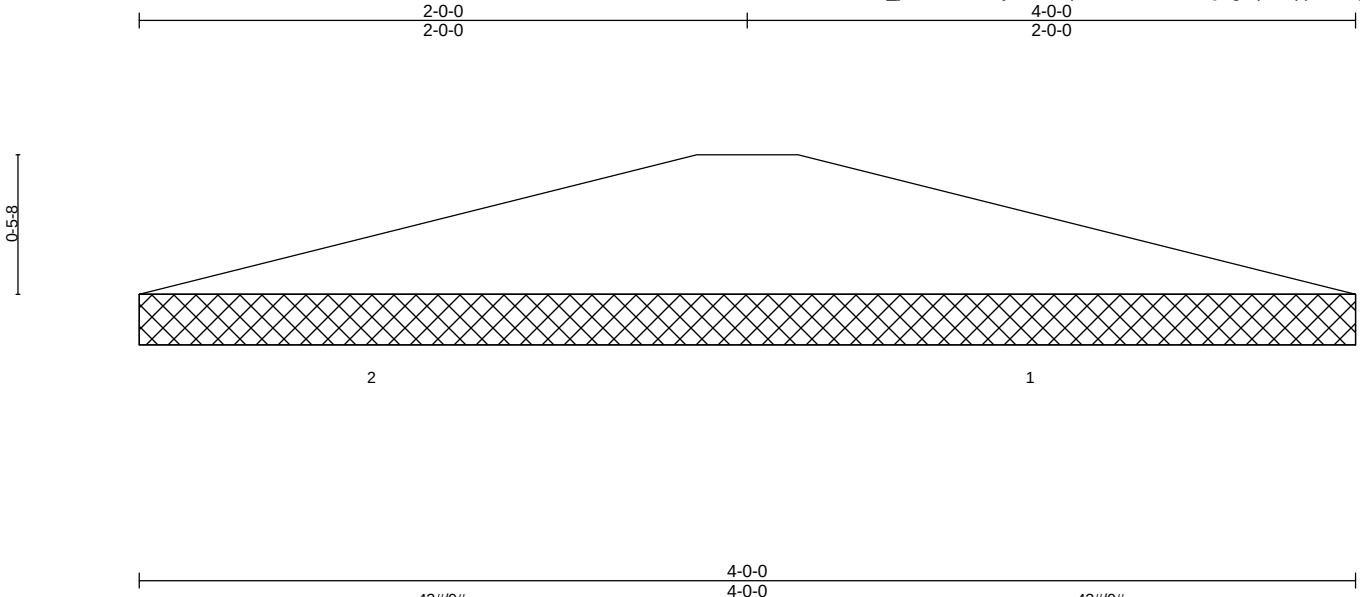

LOADING (psf)		**SPACING-** 2-0-0	**CSI.**	**DEFL.** in (loc) l/defl L/d	**PLATES** **GRIP**
TCLL	30.0	Plate Grip DOL 0.90	TC 0.00	Vert(LL) n/a - n/a 999	
TCDL	15.0	Plate Metal DOL 0.90	BC 0.02	Vert(CT) n/a - n/a 999	
BCLL	0.0	Lumber DOL 0.90	WB 0.00	Horz(CT) 0.00 n/a n/a	
BCDL	10.0	Rep Stress Incr YES	Matrix-P		Weight: 9 lb FT = 0%
		Code FBC2023/TPI2014			

LUMBER-
BOT CHORD 2x6 SP No.2

BRACING-
BOT CHORD Rigid ceiling directly applied or 10-0-0 oc bracing.

MiTek recommends that Stabilizers and required cross bracing be installed during truss erection, in accordance with Stabilizer Installation guide.

REACTIONS. (lb/size) 2=22/4-0-0 (min. 0-1-8), 1=22/4-0-0 (min. 0-1-8)
Max Grav 2=43(LC 3), 1=43(LC 3)

FORCES. (lb) - Max. Comp./Max. Ten. - All forces 250 (lb) or less except when shown.

NOTES- (4-5)
1) Building Designer / Project engineer responsible for verifying applied roof live load shown covers rain loading requirements specific to the use of this truss component.
2) Gable requires continuous bottom chord bearing.
3) This truss has been designed for a 10.0 psf bottom chord live load nonconcurrent with any other live loads.
4) All truss to truss connection by TCI are on the Truss Placement plan.
5) ARMANDO R. PEREZ PE. # 28026 Ph: (305) 882-8826

LOAD CASE(S) Standard

Job	Truss	Truss Type	Qty	Ply	12805 SW 69 CT PINECREST, FL
12805	V8	Valley	1	1	Job Reference (optional)

Trusscorp Int., 9590 NW 89 AVE, Medley, FL

8.820 s Dec 4 2024 MiTek Industries, Inc. Mon Sep 22 15:23:39 2025 Page 1
ID:csSo67mhGC_yYES62lOYJlyb5ew-x?gyJbPmcRamlsAcwNMFLdEweKaU85RWGJNPGkyb2j2

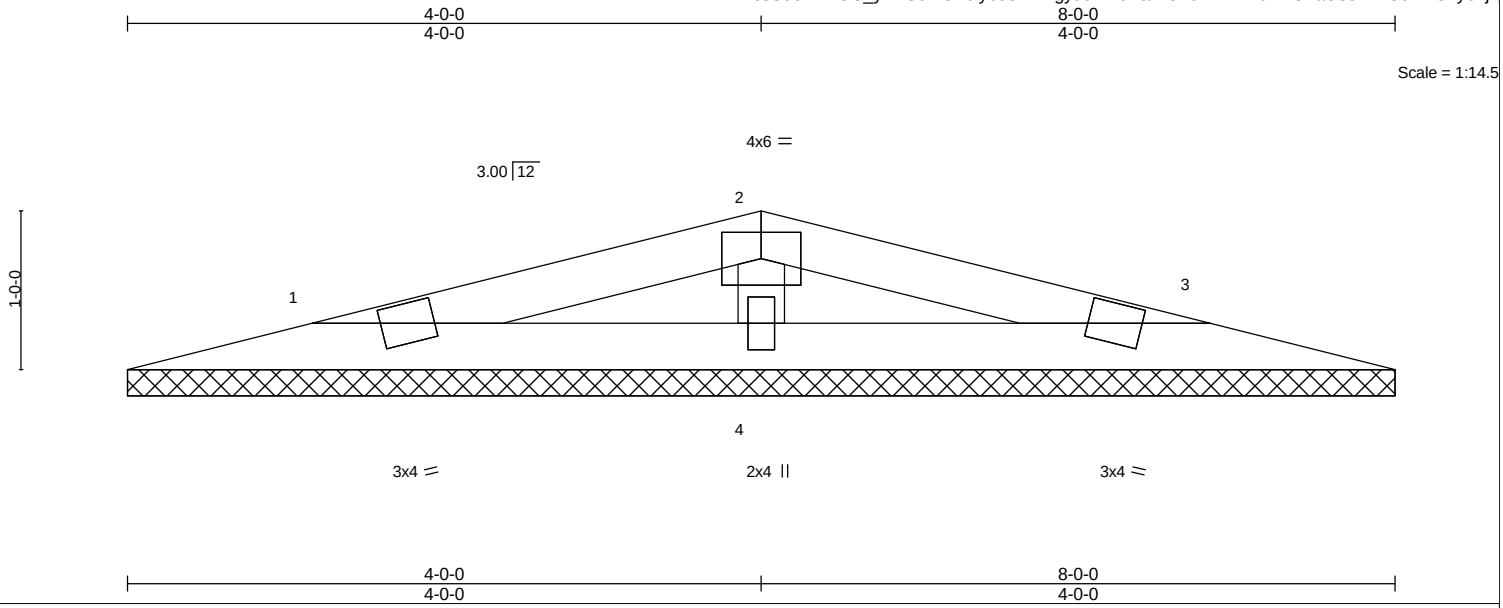

LOADING (psf)		SPACING-	2-0-0	CSI.		DEFL.	in	(loc)	l/defl	L/d	PLATES	GRIP
TCLL	30.0	Plate Grip DOL	1.33	TC	0.38	Vert(LL)	n/a	-	n/a	999	MT20	244/190
TCDL	15.0	Lumber DOL	1.33	BC	0.08	Vert(CT)	n/a	-	n/a	999		
BCLL	0.0	Rep Stress Incr	YES	WB	0.17	Horz(CT)	0.00	3	n/a	n/a		
BCDL	10.0	Code FBC2023/TPI2014		Matrix-P							Weight: 21 lb	FT = 0%

LUMBER-
TOP CHORD 2x4 SP No.2
BOT CHORD 2x4 SP No.2
WEBS 2x4 SP No.3

BRACING-
TOP CHORD Structural wood sheathing directly applied or 6-0-0 oc purlins.
BOT CHORD Rigid ceiling directly applied or 10-0-0 oc bracing.

MiTek recommends that Stabilizers and required cross bracing be installed during truss erection, in accordance with Stabilizer Installation guide.

REACTIONS. (lb/size) 1=150/8-0-0 (min. 0-1-8), 3=150/8-0-0 (min. 0-1-8), 4=320/8-0-0 (min. 0-1-8)
Max Uplift1=-294(LC 4), 3=-294(LC 4), 4=-520(LC 4)

FORCES. (lb) - Max. Comp./Max. Ten. - All forces 250 (lb) or less except when shown.
WEBS 2-4=-249/556

NOTES- (7-8)
1) Unbalanced roof live loads have been considered for this design.
2) Wind: ASCE 7-22; Vult=175mph (3-second gust) Vasd=136mph; HVHZ; TCDL=5.0psf; BCDL=5.0psf; h=15ft; Cat. II; Exp C; Encl., GCpi=0.18; C-C Zone3; Lumber DOL=1.60 plate grip DOL=1.60
3) Building Designer / Project engineer responsible for verifying applied roof live load shown covers rain loading requirements specific to the use of this truss component.
4) Gable requires continuous bottom chord bearing.
5) This truss has been designed for a 10.0 psf bottom chord live load nonconcurrent with any other live loads.
6) Provide mechanical connection (by others) of truss to bearing plate capable of withstanding 294 lb uplift at joint 1, 294 lb uplift at joint 3 and 520 lb uplift at joint 4.
7) All truss to truss connection by TCI are on the Truss Placement plan.
8) ARMANDO R. PEREZ PE. # 28026 Ph: (305) 882-8826

LOAD CASE(S) Standard

Job	Truss	Truss Type	Qty	Ply	12805 SW 69 CT PINECREST, FL
12805	V12	Valley	1	1	Job Reference (optional)

Trusscorp Int., 9590 NW 89 AVE, Medley, FL

8.820 s Dec 4 2024 MiTek Industries, Inc. Mon Sep 22 15:23:41 2025 Page 1
ID:csSo67mhGC_yYES62lOYJlyb5ew-tOoikHR183qU?9K?2oOjQ2JD57EXc_IpjdsWLcyb2j0

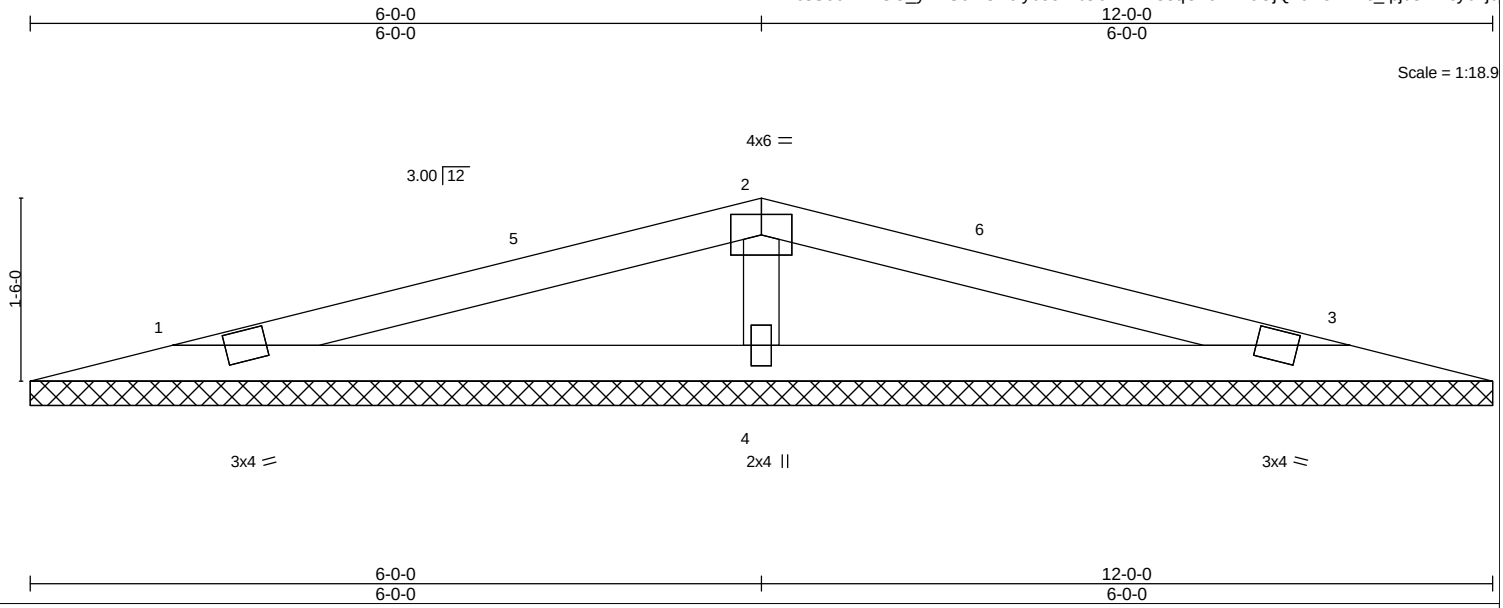

LOADING (psf)		SPACING-	2-0-0	CSI.		DEFL.	in	(loc)	l/defl	L/d	PLATES	GRIP
TCLL	30.0	Plate Grip DOL	1.33	TC	0.58	Vert(LL)	n/a	-	n/a	999	MT20	244/190
TCDL	15.0	Lumber DOL	1.33	BC	0.23	Vert(CT)	n/a	-	n/a	999		
BCLL	0.0	Rep Stress Incr	YES	WB	0.21	Horz(CT)	0.00	3	n/a	n/a		
BCDL	10.0	Code FBC2023/TPI2014		Matrix-S							Weight: 34 lb	FT = 0%

LUMBER-
TOP CHORD 2x4 SP No.2
BOT CHORD 2x4 SP No.2
WEBS 2x4 SP No.3

BRACING-
TOP CHORD Structural wood sheathing directly applied or 6-0-0 oc purlins.
BOT CHORD Rigid ceiling directly applied or 10-0-0 oc bracing.

MiTek recommends that Stabilizers and required cross bracing be installed during truss erection, in accordance with Stabilizer Installation guide.

REACTIONS. (lb/size) 1=224/12-0-0 (min. 0-1-8), 3=224/12-0-0 (min. 0-1-8), 4=612/12-0-0 (min. 0-1-8)
Max Uplift1=-322(LC 4), 3=-322(LC 4), 4=-702(LC 4)
Max Grav 1=234(LC 9), 3=234(LC 10), 4=612(LC 1)

FORCES. (lb) - Max. Comp./Max. Ten. - All forces 250 (lb) or less except when shown.
WEBS 2-4=-459/689

NOTES- (7-8)
1) Unbalanced roof live loads have been considered for this design.
2) Wind: ASCE 7-22; Vult=175mph (3-second gust) Vasd=136mph; HVHZ; TCDL=5.0psf; BCDL=5.0psf; h=15ft; Cat. II; Exp C; Encl., GCpi=0.18; C-C Zone3 1-2-3 to 4-2-3, Zone2 4-2-3 to 7-9-13, Zone3 7-9-13 to 10-9-13; Lumber DOL=1.60 plate grip DOL=1.60
3) Building Designer / Project engineer responsible for verifying applied roof live load shown covers rain loading requirements specific to the use of this truss component.
4) Gable requires continuous bottom chord bearing.
5) This truss has been designed for a 10.0 psf bottom chord live load nonconcurrent with any other live loads.
6) Provide mechanical connection (by others) of truss to bearing plate capable of withstanding 322 lb uplift at joint 1, 322 lb uplift at joint 3 and 702 lb uplift at joint 4.
7) All truss to truss connection by TCI are on the Truss Placement plan.
8) ARMANDO R. PEREZ PE. # 28026 Ph: (305) 882-8826

LOAD CASE(S) Standard

Certificate of Competency

Manufacturer or Fabricator
of Construction Materials,
Products or Assemblies

Miami-Dade County, Florida
Department of Regulatory and
Economic Resources
11805 S.W. 26 Street, Room 208
Miami, Florida 33175-2474
Tel (786) 315-2590 Fax (786) 315-2599

Certification No. 25-0804.08

The Department of Regulatory and Economic Resources hereby certifies that ***Trusscorp International, Inc.*** located at ***9590 NW 89th Avenue, Miami, FL 33178*** complies with the requirements of Article IV, Chapter 8 of the Code of Miami-Dade County as a manufacturer and/or fabricator of **Wood Trusses.**

Certification Date: *10/1/2025*
Certification Expires: *9/30/2026*

Americo Segura, M.S., C.G.C.
Quality Assurance Unit Supervisor
Product Control Section

THIS CERTIFICATE DOES NOT ENTITLE HOLDER TO CONTRACT FOR ERECTION OR INSTALATION. WHERE SEVERAL PLANTS ARE OWNED BY THE SAME COMPANY A SEPARATE CERTIFICATE OF COMPLIANCE SHALL BE REQUIRED FOR EACH PLANT. THIS CERTIFICATE SHALL BE REVOKED IF THE HOLDER FAILS TO MEET THE CODE OF POLICY REQUIREMENTS COVERING THIS PRODUCT.

A&D

Product Approval
USER: Public User

FL #	FL17232-R11
Application Type	Revision
Code Version	2023
Application Status	Approved
	*Approved by DBPR. Approvals by DBPR shall be reviewed and ratified by the POC and/or the Commission if necessary.
Comments	
Archived	☐
Product Manufacturer	MiTek Inc.
Address/Phone/Email	16023 Swingley Ridge Road Chesterfield, MO 63017 (800) 328-5934 bpr@mii.com
Authorized Signature	Erin Walden bpr@mii.com
Technical Representative	Erin M. Walden
Address/Phone/Email	16023 Swingley Ridge Road Chesterfield, MO 63017 (952) 898-8635 ewalden@mii.com
Quality Assurance Representative	Erin M. Walden
Address/Phone/Email	16023 Swingley Ridge Road Chesterfield, MO 63017 (952) 898-8635 ewalden@mii.com
Category	Structural Components
Subcategory	Wood Connectors
Compliance Method	Evaluation Report from a Product Evaluation Entity
Evaluation Entity	ICC Evaluation Service, LLC
Quality Assurance Entity	ICC-ES Evaluation Service, LLC
Quality Assurance Contract Expiration Date	10/31/2026
Validated By	ICC Evaluation Service, LLC.
Certificate of Independence	FL17232_R11_COI_ICC-ES Certification of Independence for Evaluation 2024 (1).pdf

Referenced Standard and Year (of Standard)

Standard	Year
ANSI/AWC NDS	2018
ASTM D7147	2011

Equivalence of Product Standards Certified By

Sections from the Code

Product Approval Method	Method 1 Option C
Date Submitted	01/15/2025
Date Validated	01/17/2025
Date Pending FBC Approval	
Date Approved	01/20/2025

Summary of Products

Go to Page GO!

FL #	Model, Number or Name	Description
17232.1	CLPBF	Butterfly Hanger
Limits of Use **Approved for use in HVHZ:** No **Approved for use outside HVHZ:** Yes **Impact Resistant:** N/A **Design Pressure:** N/A **Other:**		**Installation Instructions** FL17232_R11_II_ESR-3445 rev Dec24.pdf Verified By: ICC Evaluation Service, LLC Created by Independent Third Party: **Evaluation Reports** FL17232_R11_AE_ESR-3445 rev Dec24.pdf
17232.2	HD26, HD24-2, HD34, HD44	Face Mount Hanger
Limits of Use **Approved for use in HVHZ:** No **Approved for use outside HVHZ:** Yes **Impact Resistant:** N/A **Design Pressure:** N/A **Other:**		**Installation Instructions** FL17232_R11_II_ESR-3445 rev Dec24.pdf Verified By: ICC Evaluation Service, LLC Created by Independent Third Party: **Evaluation Reports** FL17232_R11_AE_ESR-3445 rev Dec24.pdf
17232.3	HD28, HD210, HD212, HD214, HD216, HD26-2, HD28-2, HD210-2, HD212-2, HD214-2, HD216-2, HD26-3, HD28-3, HD210-3, HD212-3, HD214-3, HD216-3, HD28-4, HD210-4, HD36, HD38, HD310, HD312, HD314, HD316, HD38-2, HD310-2, HD312-2, HD46, HD48	Face Mount Hanger
Limits of Use **Approved for use in HVHZ:** Yes **Approved for use outside HVHZ:** Yes **Impact Resistant:** N/A **Design Pressure:** N/A **Other:**		**Installation Instructions** FL17232_R11_II_ESR-3445 rev Dec24.pdf Verified By: ICC Evaluation Service, LLC Created by Independent Third Party: **Evaluation Reports** FL17232_R11_AE_ESR-3445 rev Dec24.pdf
17232.4	HD410, HD412, HD414, HD416, HD418, HD66, HD68, HD610, HD612, HD614, HD616, HD86, HD88, HD810, HD812, HD814, HD816, HD1770, HD17925, HD17112, HD1714, HD27925, HD27112, HD2714, HD32105, HD3212, HD5112, HD51135	Face Mount Hanger
Limits of Use **Approved for use in HVHZ:** Yes **Approved for use outside HVHZ:** Yes **Impact Resistant:** N/A **Design Pressure:** N/A **Other:**		**Installation Instructions** FL17232_R11_II_ESR-3445 rev Dec24.pdf Verified By: ICC Evaluation Service, LLC Created by Independent Third Party: **Evaluation Reports** FL17232_R11_AE_ESR-3445 rev Dec24.pdf
17232.5	HD5210, HD5212, HD5214, HD5216, HD62117, Hd71117, HD7100, HD7120, HD7140, HD7160, HD7180, HD77117, HD83117, HD95117	Face Mount Hanger
Limits of Use **Approved for use in HVHZ:** Yes **Approved for use outside HVHZ:** Yes **Impact Resistant:** N/A **Design Pressure:** N/A **Other:**		**Installation Instructions** FL17232_R11_II_ESR-3445 rev Dec24.pdf Verified By: ICC Evaluation Service, LLC Created by Independent Third Party: **Evaluation Reports** FL17232_R11_AE_ESR-3445 rev Dec24.pdf

17232.6	HDQ179IF, HDQ17112IF, HDQ1714IF, HD310IF, HDQ210-2IF, HDQ410IF, HDQ412IF, HDQ210-3IF, HDQ5210IF, HDQ5212IF, HDQ610IF, HDQ612IF	Inverted Flange Face Mount Hanger
Limits of Use **Approved for use in HVHZ:** Yes **Approved for use outside HVHZ:** Yes **Impact Resistant:** N/A **Design Pressure:** N/A **Other:**		**Installation Instructions** FL17232_R11_II_ESR-3445 rev Dec24.pdf Verified By: ICC Evaluation Service, LLC Created by Independent Third Party: **Evaluation Reports** FL17232_R11_AE_ESR-3445 rev Dec24.pdf
17232.7 *	HUS26, HUS28, HUS210, HUS175, HUS177, HUS179, HUS24-2, HUS26-2, HUS28-2, HUS210-2, HUS212-2, HUS46, HUS48, HUS410, HUS412	Slant Nail Joist Hanger
Limits of Use **Approved for use in HVHZ:** Yes **Approved for use outside HVHZ:** Yes **Impact Resistant:** N/A **Design Pressure:** N/A **Other:**		**Installation Instructions** FL17232_R11_II_ESR-3445 rev Dec24.pdf Verified By: ICC Evaluation Service, LLC Created by Independent Third Party: **Evaluation Reports** FL17232_R11_AE_ESR-3445 rev Dec24.pdf
17232.8	IHF15925, IHF15112, IHF1514, IHF16925, IHF16112, IHF1614, IHF17925, IHF17112, IHF1714, IHF1716, IHF20925, IHF20112, IHF2014, IHF23925, IHF23112, IHF2314, IHF2316, IHF2318, IHF25925, IHF25112, IHF2514, IHF2516, IHF26925, IHF26112, IHF2614, IHF2616	Joist Hanger
Limits of Use **Approved for use in HVHZ:** No **Approved for use outside HVHZ:** Yes **Impact Resistant:** N/A **Design Pressure:** N/A **Other:**		**Installation Instructions** FL17232_R11_II_ESR-3445 rev Dec24.pdf Verified By: ICC Evaluation Service, LLC Created by Independent Third Party: **Evaluation Reports** FL17232_R11_AE_ESR-3445 rev Dec24.pdf
17232.9	IHF15925-2, IHF15112-2, IHF16925-2, IHF16112-2, IHF35925, IHF35112, IHF3514, IHF3516, IHF3518, IHF20925-2, IHF20112-2, IHF2014-2, IHF23925-2, IHF25925-2, IHF25112-2	Joist Hanger
Limits of Use **Approved for use in HVHZ:** No **Approved for use outside HVHZ:** Yes **Impact Resistant:** N/A **Design Pressure:** N/A **Other:**		**Installation Instructions** FL17232_R11_II_ESR-3445 rev Dec24.pdf Verified By: ICC Evaluation Service, LLC Created by Independent Third Party: **Evaluation Reports** FL17232_R11_AE_ESR-3445 rev Dec24.pdf
17232.10	IHFL15925, IHFL15112, IHFL17925, IHFL17112, IHFL1714, IHFL1716, IHFL20925, IHFL20112, IHFL2014, IHFL2016, IHFL23925, IHFL23112, IHFL2314, IHFL2316, IHFL25925, IHFL25112, IHFL2514, IHFL2516, IHFL35925, IHFL35112, IHFL3514, IHFL3516	Joist Hanger
Limits of Use **Approved for use in HVHZ:** No **Approved for use outside HVHZ:** Yes **Impact Resistant:** N/A **Design Pressure:** N/A **Other:**		**Installation Instructions** FL17232_R11_II_ESR-3445 rev Dec24.pdf Verified By: ICC Evaluation Service, LLC Created by Independent Third Party: **Evaluation Reports** FL17232_R11_AE_ESR-3445 rev Dec24.pdf
17232.11	JL24, JL26	Standard Joist Hangers
Limits of Use **Approved for use in HVHZ:** No **Approved for use outside HVHZ:** Yes **Impact Resistant:** N/A **Design Pressure:** N/A **Other:**		**Installation Instructions** FL17232_R11_II_ESR-3445 rev Dec24.pdf Verified By: ICC Evaluation Service, LLC Created by Independent Third Party: **Evaluation Reports** FL17232_R11_AE_ESR-3445 rev Dec24.pdf

17232.12	JL24-IF	Inverted Flange Joist Hanger
Limits of Use **Approved for use in HVHZ:** No **Approved for use outside HVHZ:** Yes **Impact Resistant:** N/A **Design Pressure:** N/A **Other:**		**Installation Instructions** FL17232_R11_II_ESR-3445 rev Dec24.pdf Verified By: ICC Evaluation Service, LLC Created by Independent Third Party: **Evaluation Reports** FL17232_R11_AE_ESR-3445 rev Dec24.pdf
17232.13	JL26-IF, JL28-IF, JL210-IF	Inverted Flange Joist Hanger
Limits of Use **Approved for use in HVHZ:** Yes **Approved for use outside HVHZ:** Yes **Impact Resistant:** N/A **Design Pressure:** N/A **Other:**		**Installation Instructions** FL17232_R11_II_ESR-3445 rev Dec24.pdf Verified By: ICC Evaluation Service, LLC Created by Independent Third Party: **Evaluation Reports** FL17232_R11_AE_ESR-3445 rev Dec24.pdf
17232.14	JL28, JL210	Standard Joist Hangers
Limits of Use **Approved for use in HVHZ:** Yes **Approved for use outside HVHZ:** Yes **Impact Resistant:** N/A **Design Pressure:** N/A **Other:**		**Installation Instructions** FL17232_R11_II_ESR-3445 rev Dec24.pdf Verified By: ICC Evaluation Service, LLC Created by Independent Third Party: **Evaluation Reports** FL17232_R11_AE_ESR-3445 rev Dec24.pdf
17232.15	JN26-2, JN28-2, JN26E, JN28E, JN210E	Power Nail Hangers
Limits of Use **Approved for use in HVHZ:** No **Approved for use outside HVHZ:** Yes **Impact Resistant:** N/A **Design Pressure:** N/A **Other:**		**Installation Instructions** FL17232_R11_II_ESR-3445 rev Dec24.pdf Verified By: ICC Evaluation Service, LLC Created by Independent Third Party: **Evaluation Reports** FL17232_R11_AE_ESR-3445 rev Dec24.pdf
17232.16	JUS24, JUS24-2, JUS24-3, JUS44	Slant Nail Joist Hanger
Limits of Use **Approved for use in HVHZ:** No **Approved for use outside HVHZ:** Yes **Impact Resistant:** N/A **Design Pressure:** N/A **Other:**		**Installation Instructions** FL17232_R11_II_ESR-3445 rev Dec24.pdf Verified By: ICC Evaluation Service, LLC Created by Independent Third Party: **Evaluation Reports** FL17232_R11_AE_ESR-3445 rev Dec24.pdf
17232.17 *	JUS26, JUS28, JUS210, JUS36, JUS38, JUS310, JUS26-2, JUS28-2, JUS210-2, JUS214-2, JUS46, JUS48, JUS410, JUS412, JUS414, JUS26-3, JUS28-3, JUS210-3, JUS212-3, JUS214-3	Slant Nail Joist Hanger
Limits of Use **Approved for use in HVHZ:** Yes **Approved for use outside HVHZ:** Yes **Impact Resistant:** N/A **Design Pressure:** N/A **Other:**		**Installation Instructions** FL17232_R11_II_ESR-3445 rev Dec24.pdf Verified By: ICC Evaluation Service, LLC Created by Independent Third Party: **Evaluation Reports** FL17232_R11_AE_ESR-3445 rev Dec24.pdf
17232.18	LGU325, LGU363, LGU525, MGU363, MGU525, MGU550, MGU562, MGU700, HGU363, HGU525, HGU550, HGU562, HGU700, HGU725, HGU900	Girder Hanger
Limits of Use **Approved for use in HVHZ:** Yes **Approved for use outside HVHZ:** Yes **Impact Resistant:** N/A **Design Pressure:** N/A **Other:**		**Installation Instructions** FL17232_R11_II_ESR-3445 rev Dec24.pdf Verified By: ICC Evaluation Service, LLC Created by Independent Third Party: **Evaluation Reports** FL17232_R11_AE_ESR-3445 rev Dec24.pdf
17232.19	MUS26, MUS28	Slant Nail Joist Hanger
Limits of Use **Approved for use in HVHZ:** Yes **Approved for use outside HVHZ:** Yes **Impact Resistant:** N/A **Design Pressure:** N/A **Other:**		**Installation Instructions** FL17232_R11_II_ESR-3445 rev Dec24.pdf Verified By: ICC Evaluation Service, LLC Created by Independent Third Party: **Evaluation Reports** FL17232_R11_AE_ESR-3445 rev Dec24.pdf

Product Approval Method	Method 1 Option C
Date Submitted	01/15/2025
Date Validated	01/17/2025
Date Pending FBC Approval	
Date Approved	01/20/2025

Summary of Products

Go to Page GO!

FL #	Model, Number or Name	Description
17232.21	SUH26, SUH28, SUH210, SUH214, SUH1710, SUH1714, SUH26R, SUR28R, SUH210R, SUH214R,SUH2310, SUH2314, SUH36, SUH310, SUH314, SUH2610, SUH2614, SUH26-2, SUH28-2,SUH210-2,SUH214-2	Joist Hanger
Limits of Use **Approved for use in HVHZ:** Yes **Approved for use outside HVHZ:** Yes **Impact Resistant:** N/A **Design Pressure:** N/A **Other:**		**Installation Instructions** FL17232_R11_II_ESR-3445 rev Dec24.pdf Verified By: ICC Evaluation Service, LLC Created by Independent Third Party: **Evaluation Reports** FL17232_R11_AE_ESR-3445 rev Dec24.pdf
17232.22	SUH46, SUH48, SUH410, SUH414, SUH46R, SUH410R, SUH28-3, SUH210-3, SUH2310-2, SUH2314-2, SUH310-2, SUH66, SUH610, SUH66R, SUH610R	Joist Hanger
Limits of Use **Approved for use in HVHZ:** Yes **Approved for use outside HVHZ:** Yes **Impact Resistant:** N/A **Design Pressure:** N/A **Other:**		**Installation Instructions** FL17232_R11_II_ESR-3445 rev Dec24.pdf Verified By: ICC Evaluation Service, LLC Created by Independent Third Party: **Evaluation Reports** FL17232_R11_AE_ESR-3445 rev Dec24.pdf
17232.23	THD26, THD28, THD210, THD175, THD177, THD179, THD26-2, THD28-2, THD210-2, THD210-3, THD210-4, THD46, THD48, THD410, THD412, THD414, THD610, THD612, THD614, THD7210	Face Mount Hanger
Limits of Use **Approved for use in HVHZ:** Yes **Approved for use outside HVHZ:** Yes **Impact Resistant:** N/A **Design Pressure:** N/A **Other:**		**Installation Instructions** FL17232_R11_II_ESR-3445 rev Dec24.pdf Verified By: ICC Evaluation Service, LLC Created by Independent Third Party: **Evaluation Reports** FL17232_R11_AE_ESR-3445 rev Dec24.pdf
17232.24 *	THDH26, THDH28, THDH210, THDH27925,THDH27112,THDH2714, THDH26-2, THDH28-2, THDH210-2, THDH212-2, THDH214-2, THDH3210, THDH3212, THDH46, THDH48, THDH410, THDH412, THDH414	Face Mount Hanger
Limits of Use **Approved for use in HVHZ:** Yes **Approved for use outside HVHZ:** Yes **Impact Resistant:** N/A **Design Pressure:** N/A **Other:**		**Installation Instructions** FL17232_R11_II_ESR-3445 rev Dec24.pdf Verified By: ICC Evaluation Service, LLC Created by Independent Third Party: **Evaluation Reports** FL17232_R11_AE_ESR-3445 rev Dec24.pdf
17232.25	THDH26-3,THDH28-3, THDH210-3, THDH212-3,THDH214-3, THDH5210, THDH5212, THDH5214, THDH610, THDH612, THDH614, THDH26-4, THDH28-4, THDH6710, THDH6712,	Face Mount Hanger

	THDH6714, THDH7210, THDH7212, THDH7214	
Limits of Use **Approved for use in HVHZ:** Yes **Approved for use outside HVHZ:** Yes **Impact Resistant:** N/A **Design Pressure:** N/A **Other:**		**Installation Instructions** FL17232_R11_II_ESR-3445 rev Dec24.pdf Verified By: ICC Evaluation Service, LLC Created by Independent Third Party: **Evaluation Reports** FL17232_R11_AE_ESR-3445 rev Dec24.pdf
17232.26	THDHQ26-2, THDHQ26-3, THDHQ26-4, THDHQ28-2, THDHQ28-3, THDHQ28-4, THDHQ210-2, THDHQ210-3, THDHQ210-4, THDHQ46, THDHQ48, THDHQ410	Girder Truss Hanger
Limits of Use **Approved for use in HVHZ:** Yes **Approved for use outside HVHZ:** Yes **Impact Resistant:** N/A **Design Pressure:** N/A **Other:**		**Installation Instructions** FL17232_R11_II_ESR-3445 rev Dec24.pdf Verified By: ICC Evaluation Service, LLC Created by Independent Third Party: **Evaluation Reports** FL17232_R11_AE_ESR-3445 rev Dec24.pdf
17232.27	THF15925, THF15112, THF15140, THF16925,THF16112, THF16140, THF17925, THF17112, THF17140, THF20925, THF20112, THF20140, THF17157, THF20157,THF23925, THF23100, THF23118, THF23140, THF23160, THF25925, THF25112, THF25120, THF25130, THF25140, THF25160	Face Mount Hanger
Limits of Use **Approved for use in HVHZ:** No **Approved for use outside HVHZ:** Yes **Impact Resistant:** N/A **Design Pressure:** N/A **Other:**		**Installation Instructions** FL17232_R11_II_ESR-3445 rev Dec24.pdf Verified By: ICC Evaluation Service, LLC Created by Independent Third Party: **Evaluation Reports** FL17232_R11_AE_ESR-3445 rev Dec24.pdf
17232.28	THF15925-2, THF15112-2, THF15140-2, THF16925-2, THF16112-2, THF16140-2,THF17157-2, THF20925-2, THF20112-2, THF20140-2,THF23180, THF23925-2, THF23118-2, THF23140-2, THF23160-2, THF25925-2, THF25112-2, THF25140-2, THF25160-2,THF35165	Face Mount Hanger
Limits of Use **Approved for use in HVHZ:** Yes **Approved for use outside HVHZ:** Yes **Impact Resistant:** N/A **Design Pressure:** N/A **Other:**		**Installation Instructions** FL17232_R11_II_ESR-3445 rev Dec24.pdf Verified By: ICC Evaluation Service, LLC Created by Independent Third Party: **Evaluation Reports** FL17232_R11_AE_ESR-3445 rev Dec24.pdf
17232.29	THF26925, THF26112, THF26140, THF26160, THF35925, THF35112, THF35140, THF35157	Face Mount Hanger
Limits of Use **Approved for use in HVHZ:** No **Approved for use outside HVHZ:** Yes **Impact Resistant:** N/A **Design Pressure:** N/A **Other:**		**Installation Instructions** FL17232_R11_II_ESR-3445 rev Dec24.pdf Verified By: ICC Evaluation Service, LLC Created by Independent Third Party: **Evaluation Reports** FL17232_R11_AE_ESR-3445 rev Dec24.pdf
17232.30	THFI1795, THFI17118, THFI1714, THFI1716, THFI2095, THFI20118, THFI2014, THFI2016, THFI2395, THFI23118, THFI2314, THFI2316, THFI25925, THFI2595, THFI25118, THFI2514, THFI2516, THFI3595, THFI35118, THFI3514, THFI3516	Fact Mount Hanger
Limits of Use **Approved for use in HVHZ:** No **Approved for use outside HVHZ:** Yes **Impact Resistant:** N/A		**Installation Instructions** FL17232_R11_II_ESR-3445 rev Dec24.pdf Verified By: ICC Evaluation Service, LLC Created by Independent Third Party:

ICC-ES Evaluation Report

ESR-3445

Reissued October 2024

Revised December 2024

Subject to renewal October 2026

This report also contains:

- City of LA Supplement
- FL Supplement w/ HVHZ

ICC-ES Evaluation Reports are not to be construed as representing aesthetics or any other attributes not specifically addressed, nor are they to be construed as an endorsement of the subject of the report or a recommendation for its use. There is no warranty by ICC Evaluation Service, LLC, express or implied, as to any finding or other matter in this report, or as to any product covered by the report.

Copyright © 2024 ICC Evaluation Service, LLC. All rights reserved.

DIVISION: 06 00 00—WOOD, PLASTICS AND COMPOSITES Section: 06 05 23—Wood, Plastic, and Composite Fastenings	REPORT HOLDER: MITEK INC.	EVALUATION SUBJECT: MITEK® FACE MOUNT HANGERS FOR WOOD FRAMED CONSTRUCTION	

1.0 EVALUATION SCOPE

Compliance with the following codes:

- 2024, 2021, 2018, 2015 and 2012 *International Building Code®* (IBC)
- 2024, 2021, 2018, 2015 and 2012 *International Residential Code®* (IRC)

Property evaluated:

Structural

2.0 USES

The MiTek Face Mount Hangers for Wood Framed Construction described in this report (see Table 19 for complete listing) are used for connecting wood framing members in accordance with Section 2304.10.4 of the 2024 and 2021 IBC, Section 2304.10.3 of the 2018 and 2015 IBC and Section 2304.9.3 of the 2012 IBC). The connectors may also be used in structures regulated under the IRC when an engineered design is submitted to, and approved by, the code official, in accordance with Section R301.1.3 of the IRC.

3.0 DESCRIPTION

3.1 CLPBF Butterfly Hanger:

The CLPBF Butterfly Hanger is a face-mount hanger with triangular header flanges having prepunched nail holes for joist-to-header or truss-to-truss connections. The CLPBF Butterfly Hanger is cold-formed from No. 18 gage steel and is prepunched for 10d common nails into the header and 10d-by-$1^1/_2$-inch nails into the joist. See Table 1 and Figure 1 for product dimensions, fastener schedule, allowable loads, and a typical installation detail.

3.2 HD Face Mount Hanger:

The HD Face Mount Hanger is designed to support headers, joists and trusses. The HD Face Mount Hanger is cold-formed from No. 14 gage steel; and is prepunched for 16d common nails into the supporting member, and either 16d common, 10d common or 10d-by-$1^1/_2$-inch nails into the supported member. See Table 2 and Figure 2 for product dimensions, fastener schedule, allowable loads, and typical installation details. The HD, THD, THF and THFI offer increased allowable download and/or uplift values by installing additional nails into the diamond holes. Minimum ('min') load values require the installation of the specified nails into all round

holes of the hanger to support the corresponding allowable loads. Maximum ('max') load values require the installation of the specified nails into all round and all diamond holes of the hanger to support the increased loads. Interpolation is not allowed between the min-max allowable load values and nail count.

3.3 HUS Slant Nail Joist Hanger:

The HUS Slant Nail Joist Hanger is designed to provide double shear nailing for joist/truss-to-beam connections. The HUS Slant Nail Joist Hanger is cold-formed from No. 14 gage or No. 16 gage steel and is prepunched for 16d common nails into both the joist and the header. See Table 3 and Figure 3 for product dimensions, fastener schedule, allowable loads, and typical installation details.

3.4 JL Standard Joist Hangers:

The JL Standard Joist Hangers are designed as face mount hangers for connecting nominal dimension lumber to headers, beams or girders. The JL hangers are cold-formed from No. 20 gage steel. The hangers are prepunched for 16d common or 10d common nails into the header, and 10d-by-$1^1/_2$-inch nails into the joist. See Table 4 and Figure 4 for product dimensions, fastener schedule, allowable loads, and a typical installation detail.

3.5 JN and JNE Power Nail Hangers:

JN and JNE Joist Hangers are designed to support one- and two-ply nominally 2-by-6 and 2-by-8 dimension lumber joists. The JN joist hangers are cold-formed from No.18 gage steel and have a seat depth of $1^5/_8$ inches (41 mm). The JNE joist hangers are cold-formed from No. 20 gage steel and have a seat depth of 2 inches (51 mm). JN and JNE joist hangers are not prepunched for nails. See Table 5 and Figure 5 for product dimensions, required fastener schedule, allowable loads, and a typical installation detail.

3.6 JUS Slant Nail Joist Hanger:

The JUS Slant Nail Joist Hanger is designed for face-mount applications to provide double shear nailing for joist/truss-to-beam connections. The JUS Slant Nail Joist Hanger is cold-formed from No. 18 gage steel and is prepunched for either 10d common or 16d common nails into both the joist and the header. See Table 6 and Figure 6 for product dimensions, fastener schedule, allowable loads, and a typical installation detail.

3.7 SUH Joist Hanger:

The SUH Joist Hanger is designed as a face-mount hanger to support nominal dimension lumber joists. The SUH Joist Hanger is cold-formed from No. 16 gage steel. The SUH Joist Hanger has prongs in the header flanges to temporarily position the hanger on the header. The hanger is prepunched for 10d common or 16d common nails into the header and 10d-by-$1^1/_2$, 10d common, or 16d common nails into the joist. See Table 7 and Figure 7 for product dimensions, fastener schedule, allowable loads, and a typical installation detail.

3.8 THD Face Mount Hanger:

The THD Face Mount Hanger is designed to support metal-plate-connected wood trusses and can also support LVL, LSL and PSL members. The THD Face Mount Hanger is cold-formed from either No. 12 gage, No. 14 gage, or No. 16 gage steel; and is prepunched for 16d common nails into the header, and either 10d common or 10d-by-$1^1/_2$-inch nails into the joist. See Table 8 and Figure 8 for product dimensions, required fastener schedule, allowable loads, and a typical installation detail.

3.9 THDH Face Mount Hanger:

The THDH Face Mount Hanger is designed as a hanger for metal-plate-connected wood trusses and can also support LVL, LSL and PSL members. The THDH Face Mount Hanger is cold-formed from No. 12 gage steel and is prepunched for 16d common nails. See Table 9 and Figure 9 for product dimensions, fastener schedule, allowable loads, and a typical installation detail.

3.10 THF Face Mount Hanger:

The THF Face Mount Hanger is designed to provide lateral top chord support for I-joist-to-header applications. The supporting header may be wood I-joists, LVL, LSL, PSL, or solid sawn lumber. The THF Face Mount Hanger is cold-formed from either No. 18 gage, No. 16 gage, or No. 12 gage steel; and is prepunched for 10d common nails into the header, and either 10d common or 10d-by-$1^1/_2$-inch nails into the joist. See Table 10 and Figure 10 for product dimensions, fastener schedule, allowable loads, and a typical installation detail.

3.11 THFI Face Mount Hanger:

The THFI Face Mount Hanger is designed to provide lateral top chord support for I-joist-to-header applications with the added benefit of having six locking prongs in the hanger seat. The supporting header may be wood I-joists, LVL, LSL, PSL, or solid sawn lumber. The locking prongs provide a consistent uplift capacity for I-joists of all bottom flange thicknesses without the need of hanger-to-joist nails. The THFI also has a patented self-supporting top tab that securely grips to the header and holds the hanger in place without needing manual

assistance while fasteners are installed. The THFI Face Mount Hanger is cold formed from No. 18 gage steel and is prepunched for 10d common nails into the header. See Table 11 and Figure 11 for product dimensions, fastener schedule, allowable loads and a typical installation detail.

3.12 LGU/MGU/HGU Girder Hanger:

The LGU/MGU/HGU Girder Hangers are designed as face mount hangers for attaching glulam beams to glulam headers. Header fasteners are located high on the side flanges to allow a deeper supported member to be attached top flush to a shallower supporting member. The LGU/MGU/HGU Girder Hangers are cold formed from either No. 10 gage or No. 7 gage steel and are prepunched for $^1/_4$-inch-diameter MiTek WS Series WS3 (3-inch-length) wood screws. The MiTek WS Series wood screws are proprietary screws described in ESR-2761 and are shipped with the hangers. The LGU/MGU/HGU Girder Hangers can also be used to attach LVL, LSL and PSL beams and headers together. See Table 12 and Figure 12 for product dimensions, fastener schedule, allowable loads and a typical installation detail.

3.13 THDHQ Girder Truss Hanger:

The THDHQ Girder Truss Hangers are designed as face mount hangers for attaching multi-ply metal plated wooded girder trusses together. The THDHQ hangers are cold formed from No. 12 gage steel and are prepunched for $^1/_4$-inch-diameter MiTek WS Series WS3 (3-inch-length), WS45 ($4^1/_2$-inch-length) or WS6 (6-inch-length) wood screws. The MiTek WS Series wood screws are proprietary screws described in ESR-2761 and are shipped with the THDHQ hangers. The THDHQ hangers can also be used to connect LVL, LSL and PSL beams and headers together. See Table 13 and Figure 13 for product dimensions, fastener schedule, allowable loads and a typical installation detail.

3.14 IHF Face Mount Hanger:

The IHF Face Mount Hanger is designed to resist the gravity and uplift loads from wood I-joists. Sized specifically for wood I-joists, the sides of the IHF Face Mount Hanger provide lateral support to the I-joist top flange. The IHF Face Mount hanger is intended to support wood I-joists with flanges manufactured from structural composite lumber (SCL). Design values for the IHF Face Mount Hanger and I-joist flange property requirements are provided in Table 14. The supporting header may be wood I-joist, LVL, LSL, PSL, or solid sawn lumber. The IHF Face Mount Hanger is cold-formed from No. 16 gage steel, and is prepunched for either 10d common or 16d common nails installed into the header and 10d-by-$1^1/_2$-inch nails installed into the joist flanges. Diamond holes in the hanger flanges for hanger-to-header nailing provide for customizable (MIN/MAX) fastening to match the allowable download capacity needed as indicated in Table 14. The IHF Face Mount Hanger dimensions and typical installations are shown in Figure 14.

3.15 IHFL Face Mount Hanger:

The IHFL Face Mount Hanger is designed to resist the gravity and uplift loads from wood I-joists. Sized specifically for wood I-joists, the sides of the IHFL Face Mount Hanger provide lateral support to the I-joist top flange. The IHFL Face Mount Hanger is intended to support wood I-joists with flanges manufactured from sawn lumber or structural composite lumber (SCL). Design values for the IHFL Face Mount Hanger and I-joist flange property requirements are provided in Table 15. The supporting header may be wood I-joist, LVL, LSL, PSL, or solid sawn lumber. The IHFL Face Mount Hanger is cold-formed from No. 18 gage steel, and is prepunched for 10d common nails installed into the header. Uplift resistance is provided by six Seat Cleat® prongs that lock the bottom flange of the I-joist to the hanger, providing a consistent uplift capacity for I-joist of all bottom flange thicknesses without the installation of hanger-to-joist nails. Additional uplift capacity is provided when two joist nails are installed into the joist bottom flange (see Table 15 Footnote 6). Diamond holes in the hanger flanges for hanger-to-header nailing provide for customizable (MIN/MAX) fastening to match the allowable download capacity needed as indicated in Table 15. The IHFL Face Mount Hanger dimensions and typical installation are shown in Figure 15.

3.16 HDQIF Inverted Flange Face Mount Hangers:

The HDQIF Face Mount Inverted Flange Hanger is designed to support headers, joists, and trusses. The HDQIF Face Mount Hanger is cold-formed from No. 14 gage steel; and is prepunched for $^1/_4$-inch-by-3-inch WS3 wood screws into supporting member, and either $^1/_4$-inch-by-$1^1/_2$-inch WS15 wood screws or $^1/_4$-inch-by-3-inch MiTek WS3 wood screws into the supported member. WS Series wood screws are proprietary screws described in ESR-2761 and are shipped with the hangers. See Table 16 and Figure 16 for product dimensions, fastener schedule, allowable loads and a typical installation detail.

3.17 JLIF-TZ Inverted Flange Face Mount Hangers:

The JLIF-TZ Inverted Flange Joist Hanger is designed as a face-mount hanger to support joists of nominal lumber dimensions. The JLIF-TZ is cold-formed from No. 18 gage steel; and is prepunched for 10d or 16d common nails into the header and 10d-by-$1^1/_2$-inch nails into the joist. See Table 17 and Figure 17 for product dimensions, fastener schedule, allowable loads and a typical installation detail.

3.18 MUS Slant Nail Face Mount Joist Hangers:

The MUS Slant Nail Joist Hanger is designed for face-mount applications to provide double shear nailing for joist/truss-to-beam connections. The MUS Slant Nail Joist Hanger is cold-formed from No. 18 gage steel and is prepunched for 10d common nails into both the header and the joist. See Table 18 and Figure 18 for product dimensions, fastener schedule, allowable loads and a typical installation detail.

3.19 Materials:

3.19.1 Steel: The specific types of steel and corrosion protection for each product are described in Table 19 of this report. Minimum steel base-steel thicknesses for the different gages are shown in the following table:

GAGE NO.	MINIMUM BASE-STEEL THICKNESS (inch)
20	0.033
18	0.044
16	0.055
14	0.070
12	0.099

For **SI:** 1 inch = 25.4 mm.

3.19.2 Wood: Wood members must be sawn lumber or structural glued laminated timber with a minimum specific gravity of 0.50, or approved structural engineered lumber (structural composite lumber, alternative strand lumber, or prefabricated wood I-joists) with a minimum equivalent specific gravity of 0.50, unless otherwise noted in the applicable table within this report. Wood members must have a moisture content not exceeding 19 percent (16 percent for structural glued laminated timber and structural engineered lumber products, except as noted in Section 4.1). For connectors installed with nails, the thickness of each wood member must be sufficient such that the specified fasteners do not protrude through the opposite side of the member, unless otherwise permitted in the applicable table within this report. Wood members that are structural engineered lumber must be recognized in, and used in accordance with, a current evaluation report. Refer to Section 3.19.4 for issues related to treated wood.

3.19.3 Fasteners: Required fastener types and sizes for use with the connectors described in this report are specified in this section and Tables 1 through 18. Nails used for connectors described in this report must be bright or hot-dipped galvanized carbon steel nails complying with material requirements, physical properties, tolerances, workmanship, protective coating and finishes, and packaging and package marking requirements specified in ASTM F1667; and must have lengths, diameters and bending yield strengths as shown in the following table:

FASTENER DESIGNATION	FASTENER LENGTH (inches)	SHANK DIAMETER (inch)	MINIMUM REQUIRED F_{yb} (psi)
P-nail[1]	1.375	0.105	100,000
10d x $1^1/_2$	1.5	0.148	90,000
10d Common	3.0	0.148	90,000
16d Common	3.5	0.162	90,000

For **SI:** 1 inch = 25.4 mm, 1 psi = 6.895 kPa.

[1]The fastener designation "P-nail" refers to power-driven nails described in ESR-1539. The fastener must have a minimum diameter, length, and bending yield strength as specified in this table.

Alternatively, nails of other materials or finishes may be used when they are recognized in an ICC-ES evaluation report as having bending yield strength and withdrawal capacity equal to or better than those of a bright carbon steel of the same nominal diameter.

MiTek WS Series screws used for LGU/MGU/HGU and THDHQ hangers are described in ESR-2761.

3.19.4 Use in Treated Wood: Connectors used in contact with preservative-treated or fire-retardant-treated wood must comply with Section 2304.10.6 of the 2024 and 2021 IBC (Section 2304.10.5 of the 2018 and 2015 IBC, and Section 2304.9.5 of the 2012 IBC) and Section R304.3 of the 2024 IRC (Section R317.3 of the 2021, 2018, 2015 and 2012 IRC. The lumber treater or the report holder (MiTek), or both, should be contacted for recommendations on the appropriate level of corrosion resistance to specify for the connectors. Fasteners used in contact with preservative-treated or fire-retardant-treated wood must be hot-dipped galvanized carbon steel nails. Alternatively, nails of other materials and finishes may be used when they are recognized in an ICC-ES evaluation report for use in the applicable treated lumber and have equivalent or greater capacities as those required in this report.

4.0 DESIGN AND INSTALLATION

4.1 Design:

The allowable load capacities in Tables 1 through 18 are based on allowable stress design. The use of the allowable load values for the products listed in Table 19 of this report must comply with all applicable requirements and conditions specified in this report. Tabulated allowable loads are for normal load duration and/or short load duration, based on load duration factors, C_D, in accordance with Section 11.3.2 of the *National Design Specification® for Wood Construction* (NDS) for the 2024, 2021, 2018 and 2015 IBC and IRC (Section 10.3.2 of the NDS for the 2012 IBC and IRC), as indicated in Tables 1 through 18 of this report. No further increases are permitted for load durations other than those specified. Tabulated allowable loads are for connections in wood seasoned to a maximum moisture content of 19 percent (16 percent for structural glued laminated timber and structural engineered lumber products) or less, used under continuously dry conditions and where sustained temperatures are limited to 100°F (37.8°C) or less. When connectors are installed in wood having a moisture content greater than 19 percent (16 percent for engineered wood products), or where the in-service moisture content is expected to exceed this value, the applicable wet service factor, C_M, must be applied. Unless otherwise noted in the tables of this report, the applicable wet service factor, C_M, is as specified in the NDS for lateral loading of dowel-type fasteners. When connectors are installed in wood that will experience sustained exposure to temperatures exceeding 100°F (37.8°C), the allowable loads in this evaluation report must be adjusted by the temperature factor, C_t, specified in Section 11.3.4 of the NDS for the 2024, 2021, 2018 and 2015 IBC and IRC (Section 10.3.4 of the NDS for the 2012 IBC and IRC). Connected wood members must be checked for load-carrying capacity at the connection in accordance with NDS Section 11.1.2 for the 2024, 2021, 2018 and 2015 IBC and IRC (Section 10.1.2 of the NDS for the 2012 IBC and IRC).

4.2 Installation:

Installation of the connectors must be in accordance with this evaluation report and the manufacturer's published installation instructions.

4.3 Special Inspection:

4.3.1 Main Wind Force-Resisting Systems under the IBC: Periodic special inspection must be conducted for components within the main windforce-resisting system, where required in accordance with Sections 1704.2 and 1705.12 of the 2024 and 2021 IBC (Sections 1704.2 and 1705.11 of the 2018 and 2015 IBC and Section 1705.10 of the 2012 IBC).

4.3.2 Seismic Force-Resisting Systems under the IBC: Periodic special inspection must be conducted for components within the seismic force-resisting system, where required in accordance with Sections 1704.2 and 1705.13 of the 2024 and 2021 IBC (Sections 1704.2 and 1705.12 of the 2018 and 2015 IBC and Section 1705.11 of the 2012 IBC).

4.3.3 Installations under the IRC: Special inspections are normally not required for connectors used in structures regulated under the IRC. However, for components and systems requiring an engineered design in accordance with IRC Section R301, periodic special inspection requirements and exemptions must be in accordance with Sections 4.3.1 and 4.3.2 of this report.

5.0 CONDITIONS OF USE:

The MiTek Face Mount Hangers described in this report comply with, or are suitable alternatives to what is specified in, those codes listed in Section 1.0 of this report, subject to the following conditions:

5.1 The connectors must be manufactured, identified and installed in accordance with this report and the manufacturer's published installation instructions. A copy of the manufacturer's published installation instructions must be available at the jobsite at all times during installation. In the event of a conflict between this report and the manufacturer's published installation instructions, this report governs.

5.2 Calculations showing compliance with this report must be submitted to the code official. The calculations must be prepared by a registered design professional where required by the statutes of the jurisdiction in which the project is to be constructed.

5.3 Connected wood members and fasteners must comply with Sections 3.19.2 and 3.19.3, respectively.

5.4 Adjustment factors, noted in Section 4.1 of this report and the applicable codes, must be considered where applicable.

5.5 Use of connectors and fasteners with preservative-treated or fire-retardant-treated lumber must be in accordance with Section 3.19.4.

5.6 The connectors are manufactured under an approved quality control program with inspections by ICC-ES.

6.0 EVIDENCE SUBMITTED

Data in accordance with the ICC-ES Acceptance Criteria for Joist Hangers and Similar Devices (AC13), approved October 2018 (editorially revised February 2024).

7.0 IDENTIFICATION

7.1 The connectors described in this report are identified by the product model (stock) number, the number of the ICC-ES index evaluation report for MiTek (ESR-2685), and by one or more of the following designations: MiTek, USP or USP Structural Connectors.

7.2 The report holder's contact information is the following:

MITEK INC.
16023 SWINGLEY RIDGE ROAD
CHESTERFIELD, MISSOURI 63017
(800) 328-5934
www.mitek-us.com

TABLE 1—CLPBF BUTTERFLY HANGER ALLOWABLE LOADS[1,2,3,4]

STOCK NO.	JOIST WIDTH (in.)	STEEL GA.	DIMENSIONS			FASTENER SCHEDULE				ALLOWABLE LOADS (lbs)			
			W	H	D	Header		Joist		Download			Uplift
						Qty	Type	Qty	Type	C_D=1.0	C_D=1.15	C_D=1.25	C_D=1.60
CLPBF	$1^1/_2$	18	$1^9/_{16}$	$2^1/_2$	$2^1/_2$	12	10d Common	6	10d x $1^1/_2$	1,340	1,340	1,340	195

For **SI:** 1 inch = 25.4 mm, 1 lb. = 4.45 N.

[1]Allowable loads have been adjusted for load duration factors, C_D, as shown, in accordance with the NDS. The allowable loads do not apply to loads of other durations, and are not permitted to be adjusted for other load durations. See Sections 4.1 and 4.2 for additional design and installation requirements.
[2]See Section 3.19.3 for required fastener dimensions and mechanical properties.
[3]Allowable loads shown are for installations in wood members complying with Section 3.19.2. Wood members must also have a minimum reference compression perpendicular to grain design value, $F_{c\text{-}perp}$, of 625 psi (4.31 MPa).
[4]CLPBF hangers provide torsional resistance, up to a maximum joist depth of 3.5 inches (88.9 mm), where torsional resistance is defined as a moment not less than 75 pounds (334 N) times the depth of the joist, at which the lateral movement of the top or bottom of the joist with respect to the vertical position of the joist is 0.125 inch (3.2 mm).

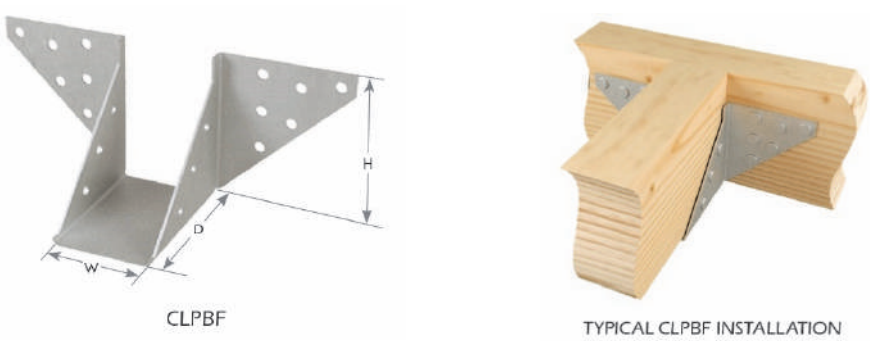

FIGURE 1—CLPBF BUTTERFLY HANGER

TABLE 3—HUS SLANT NAIL JOIST HANGER ALLOWABLE LOADS[1,2,3,4,6]

STOCKNO.	STEEL GAGE	DIMENSIONS (in.)				FASTENER SCHEDULE				ALLOWABLE DESIGN LOADS (lbs)			
		W	H	D	A	Header		Joist[5]		Download			Uplift
						Qty	Type	Qty	Type	C_D = 1.0	C_D = 1.15	C_D = 1.25	C_D = 1.6
HUS26	16	$1^5/_8$	$5^7/_{16}$	3	2	14	16d Common	6	16d Common	2,760	3,140	3,400	2,045
HUS28	16	$1^5/_8$	$7^3/_{16}$	3	2	22	16d Common	8	16d Common	4,170	4,745	5,125	2,990
HUS210	16	$1^5/_8$	$9^3/_{16}$	3	2	30	16d Common	10	16d Common	5,455	5,825	6,060	4,110
HUS175	16	$1^{13}/_{16}$	$5^3/_8$	3	2	14	16d Common	6	16d Common	2,760	3,140	3,400	2,045
HUS177	16	$1^{13}/_{16}$	$7^1/_8$	3	2	22	16d Common	8	16d Common	4,170	4,745	5,125	2,990
HUS179	16	$1^{13}/_{16}$	$9^1/_8$	3	2	30	16d Common	10	16d Common	5,580	6,060	6,060	4,110
HUS24-2	14	$3^1/_8$	$3^7/_{16}$	2	1	4	16d Common	2	16d Common	850	965	1,040	765
HUS26-2	14	$3^1/_8$	$5^1/_4$	2	1	4	16d Common	4	16d Common	1,085	1,235	1,330	1,170
HUS28-2	14	$3^1/_8$	$7^1/_8$	2	1	6	16d Common	6	16d Common	1,625	1,850	1,880	2,420
HUS210-2	14	$3^1/_8$	$9^1/_8$	2	1	8	16d Common	8	16d Common	2,170	2,465	2,660	2,420
HUS212-2	14	$3^1/_8$	$11^1/_8$	2	1	10	16d Common	10	16d Common	2,710	3,080	3,325	3,615
HUS46	14	$3^5/_8$	5	2	1	4	16d Common	4	16d Common	1,085	1,235	1,330	1,170
HUS48	14	$3^5/_8$	7	2	1	6	16d Common	6	16d Common	1,625	1,850	1,880	2,420
HUS410	14	$3^5/_8$	$8^7/_8$	2	1	8	16d Common	8	16d Common	2,170	2,465	2,660	2,420
HUS412	14	$3^5/_8$	$10^7/_8$	2	1	10	16d Common	10	16d Common	2,710	3,080	3,325	3,615

For **SI:** 1 inch = 25.4 mm, 1 lbf = 4.45 N.

[1]Allowable loads have been adjusted for load duration factors, C_D, as shown, in accordance with the NDS. The allowable loads do not apply to loads of other durations, and are not permitted to be adjusted for other load durations. See Sections 4.1 and 4.2 for additional design and installation requirements.

[2]Allowable loads shown are for installations in wood members complying with Section 3.19.2. Wood members must also have a minimum reference compression perpendicular to grain design value, $F_{c\text{-}perp}$, of 625 psi (4.31 MPa).

[3]See Section 3.19.3 for required fastener dimensions and mechanical properties.

[4]HUS hangers provide torsional resistance, where torsional resistance is defined as a moment not less than 75 pounds (334 N) times the depth of the joist, at which the lateral movement of the top or bottom of the joist with respect to the vertical position of the joist is 0.125 inch (3.2 mm).

[5]Joist nails must be driven horizontally into the joist at an angle of 30- to 45-degrees from normal, such that they penetrate through the joist and into the header.

[6]HUS-IF inverted flange hangers are available in widths of $2^1/_4$ inches or greater at the same design loads as corresponding HUS models.

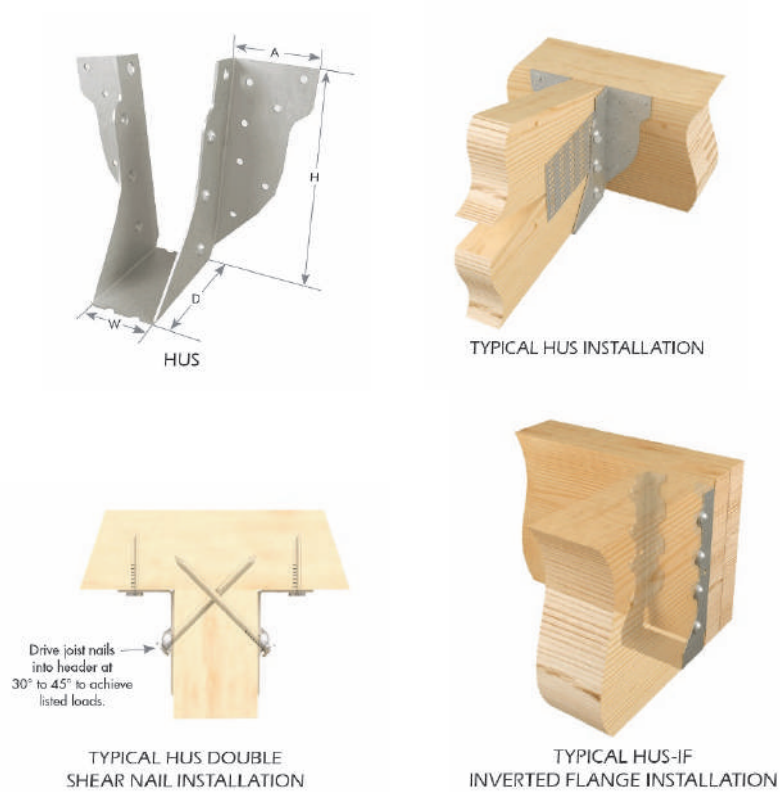

FIGURE 3—HUS SLANT NAIL JOIST HANGER

TABLE 6—JUS SLANT NAIL JOIST HANGER ALLOWABLE LOADS[1,2,3,4]

STOCK NO.	STEEL GAGE	DIMENSIONS (in.)				FASTENER SCHEDULE				ALLOWABLE DESIGN LOADS (lbs)			
		W	H	D	A	Header		Joist		Download			Uplift
						Qty	Type	Qty	Type	C_D = 1.0	C_D = 1.15	C_D = 1.25	C_D = 1.6
JUS24	18	$1^9/_{16}$	$3^1/_8$	$1^3/_4$	1	4	10d Common	2	10d Common	675	775	835	660
JUS26	18	$1^9/_{16}$	$4^{13}/_{16}$	$1^3/_4$	1	4	10d Common	4	10d Common	870	1,000	1,080	1,050
JUS28	18	$1^9/_{16}$	$6^5/_8$	$1^3/_4$	1	6	10d Common	4	10d Common	1,110	1,270	1,375	1,050
JUS210	18	$1^9/_{16}$	$7^3/_4$	$1^3/_4$	1	8	10d Common	4	10d Common	1,350	1,545	1,670	1,050
JUS36	18	$2^9/_{16}$	$5^1/_4$	2	1	4	16d Common	4	16d Common	1,040	1,185	1,290	1,270
JUS38	18	$2^9/_{16}$	$6^3/_4$	2	1	6	16d Common	4	16d Common	1,325	1,510	1,645	1,270
JUS310	18	$2^9/_{16}$	$9^1/_8$	2	1	8	16d Common	6	16d Common	1,845	2,105	2,290	2,345
JUS24-2	18	$3^1/_8$	$3^7/_{16}$	2	1	4	16d Common	2	16d Common	805	900	900	660
JUS26-2	18	$3^1/_8$	$5^1/_4$	2	1	4	16d Common	4	16d Common	1,040	1,185	1,290	1,270
JUS28-2	18	$3^1/_8$	$7^1/_8$	2	1	6	16d Common	4	16d Common	1,325	1,510	1,645	1,270
JUS210-2	18	$3^1/_8$	$9^1/_8$	2	1	8	16d Common	6	16d Common	1,845	2,105	2,290	2,345
JUS214-2	18	$3^1/_8$	$13^1/_8$	2	1	12	16d Common	6	16d Common	2,420	2,755	2,830	2,345
JUS44	18	$3^5/_8$	$3^1/_4$	2	1	4	16d Common	2	16d Common	780	780	780	660
JUS46	18	$3^5/_8$	5	2	1	4	16d Common	4	16d Common	1,040	1,185	1,290	1,270
JUS48	18	$3^5/_8$	$6^7/_8$	2	1	6	16d Common	4	16d Common	1,325	1,510	1,645	1,270
JUS410	18	$3^5/_8$	$8^7/_8$	2	1	8	16d Common	6	16d Common	1,845	2,105	2,290	2,345
JUS412	18	$3^5/_8$	$10^7/_8$	2	1	10	16d Common	6	16d Common	2,130	2,405	2,405	2,345
JUS414	18	$3^5/_8$	$12^7/_8$	2	1	12	16d Common	6	16d Common	2,405	2,405	2,405	2,345
JUS24-3	18	$4^5/_8$	$2^3/_4$	2	1	4	16d Common	2	16d Common	805	900	900	660
JUS26-3	18	$4^5/_8$	$4^1/_2$	2	1	4	16d Common	4	16d Common	1,040	1,185	1,290	1,270
JUS28-3	18	$4^5/_8$	$6^3/_8$	2	1	6	16d Common	4	16d Common	1,325	1,510	1,645	1,270
JUS210-3	18	$4^5/_8$	$8^3/_8$	2	1	8	16d Common	6	16d Common	1,845	2,105	2,290	2,345
JUS212-3	18	$4^5/_8$	$10^3/_8$	2	1	10	16d Common	6	16d Common	2,130	2,405	2,405	2,345
JUS214-3	18	$4^5/_8$	$12^3/_8$	2	1	12	16d Common	6	16d Common	2,405	2,405	2,405	2,345

For **SI:** 1 inch = 25.4 mm, 1 lbf = 4.45 N.

[1]Allowable loads have been adjusted for load duration factors, C_D, as shown, in accordance with the NDS. The allowable loads do not apply to loads of other durations, and are not permitted to be adjusted for other load durations. See Sections 4.1 and 4.2 for additional design and installation requirements.
[2]Allowable loads shown are for installations in wood members complying with Section 3.19.2. Wood members must also have a minimum reference compression perpendicular to grain design value, $F_{c\text{-}perp}$, of 625 psi (4.31 MPa).
[3]See Section 3.19.3 for required fastener dimensions and mechanical properties.
[4]JUS hangers provide torsional resistance, up to a maximum joist depth of H + 1.0 inch (H + 25.4 mm) where torsional resistance is defined as a moment not less than 75 pounds (334 N) times the depth of the joist, at which the lateral movement of the top or bottom of the joist with respect to the vertical position of the joist is 0.125 inch (3.2 mm).
[5]Joist nails must be driven horizontally into the joist at an angle of 30- to 45-degrees from normal, such that they penetrate through the joist and into the header.

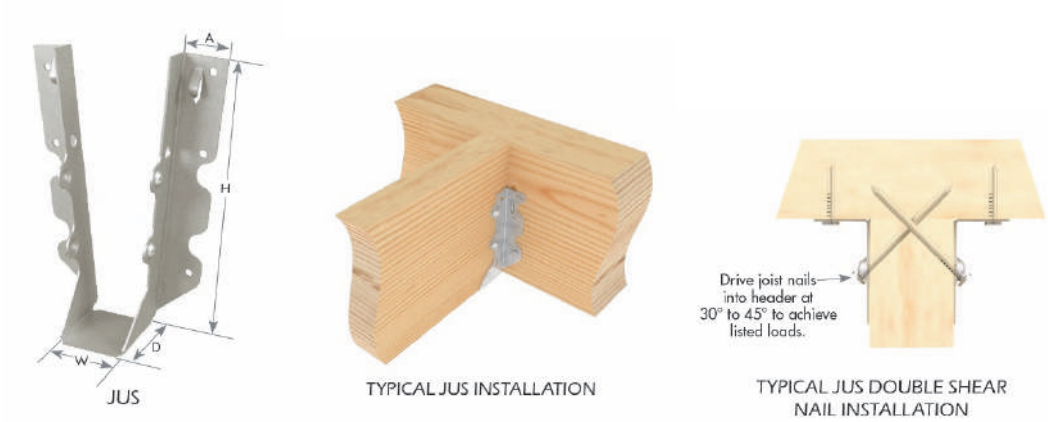

FIGURE 6—JUS SLANT NAIL JOIST HANGER

ICC-ES® Most Widely Accepted and Trusted

TABLE 9—THDH FACE MOUNT HANGER ALLOWABLE LOADS[1,2,3,4]

STOCK NO.	STEEL GAGE	DIMENSIONS (in.)			FASTENER SCHEDULE				ALLOWABLE LOADS (lbs)			
		W	H	D	Header		Joist		Download			Uplift
					Qty	Type	Qty	Type	C_D = 1.0	C_D = 1.15	C_D = 1.25	C_D = 1.6
THDH26	12	1 5/8	5 7/16	5	20	16d Common	8	16d Common	4,375	4,895	5,180	2,805
THDH28	12	1 5/8	7 3/16	5	36	16d Common	12	16d Common	7,595	8,175	8,175	4,345
THDH210	12	1 5/8	9 3/16	5	46	16d Common	16	16d Common	9,310	9,710	9,710	5,290
THDH27925	12	2 3/4	9 1/8	4	46	16d Common	12	16d Common	9,020	9,020	9,020	4,345
THDH27112	12	2 3/4	10 7/8	4	56	16d Common	14	16d Common	9,710	9,710	9,710	4,345
THDH2714	12	2 3/4	12 1/4	4	66	16d Common	16	16d Common	11,185	11,325	11,325	5,290
THDH26-2	12	3 7/16	5 3/8	4	20	16d Common	8	16d Common	4,375	4,895	5,180	2,805
THDH28-2	12	3 7/16	7 1/8	4	36	16d Common	10	16d Common	7,360	8,175	8,175	3,000
THDH210-2	12	3 7/16	9 1/8	4	46	16d Common	12	16d Common	9,020	9,020	9,020	4,345
THDH212-2	12	3 3/8	10 1/2	4	56	16d Common	14	16d Common	9,710	9,710	9,710	4,345
THDH214-2	12	3 3/8	12 1/4	4	66	16d Common	16	16d Common	11,325	11,325	11,325	5,290
THDH3210	12	3 3/16	9 3/8	4	46	16d Common	12	16d Common	9,020	9,020	9,020	4,345
THDH3212	12	3 3/16	10 5/8	4	56	16d Common	14	16d Common	9,710	9,710	9,710	5,290
THDH46	12	3 9/16	5 3/8	4	20	16d Common	8	16d Common	4,375	4,895	5,180	2,805
THDH48	12	3 9/16	7 1/8	4	36	16d Common	10	16d Common	7,360	8,175	8,175	3,000
THDH410	12	3 9/16	9 1/8	4	46	16d Common	12	16d Common	9,020	9,020	9,020	4,345
THDH412	12	3 9/16	10 1/2	4	56	16d Common	14	16d Common	9,710	9,710	9,710	5,290
THDH414	12	3 9/16	13 1/16	4	66	16d Common	16	16d Common	11,325	11,325	11,325	5,305
THDH26-3	12	5 1/8	5 7/16	4	20	16d Common	8	16d Common	4,375	4,895	5,180	2,805
THDH28-3	12	5 1/8	7 3/16	4	36	16d Common	12	16d Common	7,595	8,175	8,175	4,345
THDH210-3	12	5 1/8	9 3/16	4	46	16d Common	16	16d Common	9,710	9,710	9,710	5,290
THDH212-3	12	5 1/8	11 3/16	4	56	16d Common	20	16d Common	9,530	9,530	9,530	5,290
THDH214-3	12	5 1/8	13 3/16	4	66	16d Common	22	16d Common	11,325	11,325	11,325	5,305
THDH5210	12	5 3/8	9 1/8	4	46	16d Common	16	16d Common	9,710	9,710	9,710	5,290
THDH5212	12	5 3/8	11 1/8	4	56	16d Common	20	16d Common	9,530	9,530	9,530	5,290
THDH5214	12	5 3/8	13 1/8	4	66	16d Common	22	16d Common	11,325	11,325	11,325	5,305
THDH610	12	5 1/2	9	4	46	16d Common	16	16d Common	9,020	9,020	9,020	5,290
THDH612	12	5 1/2	11	4	56	16d Common	20	16d Common	9,530	9,530	9,530	5,290
THDH614	12	5 1/2	13	4	66	16d Common	22	16d Common	11,325	11,325	11,325	5,305
THDH26-4	12	6 9/16	5 7/16	4	20	16d Common	8	16d Common	4,375	4,895	5,180	2,805
THDH28-4	12	6 7/16	7 9/16	4	36	16d Common	12	16d Common	7,595	8,175	8,175	4,345
THDH6710	12	6 7/8	8 13/16	4	46	16d Common	12	16d Common	9,020	9,020	9,020	4,345
THDH6712	12	6 7/8	10 13/16	4	56	16d Common	14	16d Common	9,020	9,020	9,020	5,290
THDH6714	12	6 7/8	12 13/16	4	66	16d Common	16	16d Common	11,325	11,325	11,325	5,305
THDH7210	12	7 1/4	9	4	46	16d Common	12	16d Common	9,020	9,020	9,020	4,345
THDH7212	12	7 1/4	10 1/2	4	56	16d Common	14	16d Common	9,020	9,020	9,020	5,290
THDH7214	12	7 1/4	12 1/4	4	66	16d Common	16	16d Common	11,325	11,325	11,325	5,305

For **SI:** 1 inch = 25.4 mm, 1 lbf = 4.45 N.

[1]Allowable loads have been adjusted for load duration factors, C_D, as shown, in accordance with the NDS. The allowable loads do not apply to loads of other durations, and are not permitted to be adjusted for other load durations. See Sections 4.1 and 4.2 for additional design and installation requirements.

[2]Allowable loads shown are for installations in wood members complying with Section 3.19.2. Wood members must also have a minimum reference compression perpendicular to grain design value, $F_{c\text{-}perp}$, of 625 psi (4.31 MPa).

[3]See Section 3.19.3 for required fastener dimensions and mechanical properties.

[4]THDH hangers provide torsional resistance, up to a maximum joist depth of H + 1.0 inch (H + 25.4 mm) where torsional resistance is defined as a moment not less than 75 pounds (334 N) times the depth of the joist, at which the lateral movement of the top or bottom of the joist with respect to the vertical position of the joist is 0.125 inch (3.2 mm).

[5]Joist nails must be driven horizontally into the joist at an angle of 30- to 45-degrees from normal, such that they penetrate through the joist, and into the header.

FIGURE 9—THDH FACE MOUNT HANGER

TABLE 19—STEEL TYPE, STRENGTH AND CORROSION RESISTANCE

Product	Steel	Coating[1]
CLPBF Butterfly Hanger	ASTM A653, SS designation, Grade 40	G90
HD Face Mount Hanger	ASTM A653, SS designation, Grade 40	G90
HUS Slant Nail Joist Hanger	ASTM A653, SS designation, Grade 40	G90, G185
JL Standard Joist Hanger	ASTM A653, SS designation, Grade 40	G90
JN Power Nail Hanger	ASTM A653, SS designation, Grade 40	G90
JNE Power Nail Hanger	ASTM A653, SS designation, Grade 40	G90
JUS Slant Nail Joist Hanger	ASTM A653, SS designation, Grade 40	G90, G185
SUH Joist Hanger	ASTM A653, SS designation, Grade 40	G90
THD Face Mount Hanger	ASTM A653, SS designation, Grade 40	G90, G185
THDH Face Mount Hanger	ASTM A653, SS designation, Grade 40	G90, G185
THF Face Mount Hanger	ASTM A653, SS designation, Grade 40	G90
THFI Face Mount Hanger	ASTM A653, SS designation, Grade 40	G90
LGU/MGU/HGU Girder Hanger	ASTM A653, SS designation, Grade 40	G90
THDHQ Girder Truss Hanger	ASTM A653, SS designation, Grade 40	G90
IHF Face Mount Hanger	ASTM A653, SS designation, Grade 40	G90
IHFL Face Mount Hanger	ASTM A653, SS designation, Grade 40	G90
HDQIF Inverted Flange Face Mount Hangers	ASTM A653, SS designation, Grade 40	G90
JLIF-TZ Inverted Flange Face Mount Hangers	ASTM A653, SS designation, Grade 40	G185
MUS Slant Nail Face Mount Joist Hangers	ASTM A653, SS designation, Grade 40	G90

[1]Corrosion protection is a zinc coating in accordance with ASTM A653.

DIVISION: 06 00 00—WOOD, PLASTICS AND COMPOSITES
Section: 06 05 23—Wood, Plastic, and Composite Fastenings

REPORT HOLDER:

MITEK® INC.

EVALUATION SUBJECT:

MITEK® FACE MOUNT HANGERS FOR WOOD FRAMED CONSTRUCTION

1.0 REPORT PURPOSE AND SCOPE

Purpose:

The purpose of this evaluation report supplement is to indicate that MiTek face mount hangers for wood framed construction, described in ICC-ES evaluation report ESR-3445, have also been evaluated for compliance with the codes noted below as adopted by the Los Angeles Department of Building and Safety (LADBS).

Applicable code editions:

- 2023 *City of Los Angeles Building Code* (LABC)
- 2023 *City of Los Angeles Residential Code* (LARC)

2.0 CONCLUSIONS

The MiTek face mount hangers for wood framed construction, described in Sections 2.0 through 7.0 of the evaluation report ESR-3445, comply with the LABC Chapter 23, and the LARC, and are subject to the conditions of use described in this supplement.

3.0 CONDITIONS OF USE

The MiTek face mount hangers for wood framed construction, described in this evaluation report supplement must comply with all of the following conditions:

- All applicable sections in the evaluation report ESR-3445.
- The design, installation, conditions of use and identification are in accordance with the 2021 *International Building Code®* (IBC) provisions noted in the evaluation report ESR-3445.
- The design, installation and inspection are in accordance with additional requirements of LABC Chapters 16 and 17, as applicable.
- The supported end of joist or beam must be within $^{1}/_{4}$-inch from the supporting member.
- Solid blocking must be required for all joist hangers supporting roof joists having one end twisted more than one-half degree per foot of length relative to the other end, except as specifically noted in the evaluation report.
- Under the LARC, an engineered design in accordance with LARC Section R301.1.3 must be submitted.

This evaluation report supplement expires concurrently with the evaluation report ESR-3445, reissued October 2024 and revised December 2024.

ICC-ES Evaluation Reports are not to be construed as representing aesthetics or any other attributes not specifically addressed, nor are they to be construed as an endorsement of the subject of the report or a recommendation for its use. There is no warranty by ICC Evaluation Service, LLC, express or implied, as to any finding or other matter in this report, or as to any product covered by the report.

Copyright © 2024 ICC Evaluation Service, LLC. All rights reserved.

DIVISION: 06 00 00—WOOD, PLASTICS AND COMPOSITES
Section: 06 05 23—Wood, Plastic, and Composite Fastenings

REPORT HOLDER:

MITEK®, INC.

EVALUATION SUBJECT:

MITEK® FACE MOUNT HANGERS FOR WOOD FRAMED CONSTRUCTION

1.0 REPORT PURPOSE AND SCOPE

Purpose:

The purpose of this evaluation report supplement is to indicate that MiTek face mount hangers for wood framed construction, described in ICC-ES evaluation report ESR-3445, have also been evaluated for compliance with the codes noted below.

Applicable code editions:

- 2023 *Florida Building Code—Building*
- 2023 *Florida Building Code—Residential*

2.0 CONCLUSIONS

The MiTek face mount hangers for wood wood framed construction, described in Sections 2.0 through 7.0 of the evaluation report ESR-3445, comply with the *Florida Building Code—Building* and the *Florida Building Code—Residential*. The design requirements must be determined in accordance with the *Florida Building Code—Building* or the *Florida Building Code—Residential*, as applicable. The installation requirements noted in the evaluation report ESR-3445 for the 2021 *International Building Code®* meet the requirements of the *Florida Building Code—Building* or the *Florida Building Code—Residential*, as applicable.

Use of the MiTek face mount hangers for wood framed construction has also been found to be in compliance with the High-Velocity Hurricane Zone (HVHZ) provisions of the *Florida Building Code—Building* and the *Florida Building Code—Residential* with the following condition:

a) For connections subject to uplift, the connection must be designed for no less than 700 pounds (3114 N).

For products falling under Florida Rule 61G20-3, verification that the report holder's quality assurance program is audited by a quality assurance entity approved by the Florida Building Commission for the type of inspections being conducted is the responsibility of an approved validation entity (or the code official, when the report holder does not possess an approval by the Commission).

This evaluation report supplement expires concurrently with the evaluation report ESR-3445, reissued October 2024 and revised December 2024.

ICC-ES Evaluation Reports are not to be construed as representing aesthetics or any other attributes not specifically addressed, nor are they to be construed as an endorsement of the subject of the report or a recommendation for its use. There is no warranty by ICC Evaluation Service, LLC, express or implied, as to any finding or other matter in this report, or as to any product covered by the report.

Copyright © 2024 ICC Evaluation Service, LLC. All rights reserved.

APRIL 1, 2025	TRUSSED VALLEY SET DETAIL (TYPICAL)	

GENERAL SPECIFICATIONS

1. NAIL SIZE 10d (0.131" X 3")
2. WOOD SCREW = 4.5" WS45 USP OR EQUILIVANT
3. INSTALL SHEATHING TO TOP CHORD OF BASE TRUSSES.
4. INSTALL VALLEY TRUSSES (24" O.C. MAXIMUM) AND SECURE TO BASE TRUSSES AS PER DETAIL A
5. BRACE VALLEY WEBS IN ACCORDANCE WITH THE INDIVIDUAL DESIGN DRAWINGS.
6. NAILING DONE PER NDS-01
7. VALLEY STUD SPACING NOT TO EXCEED 48" O.C.

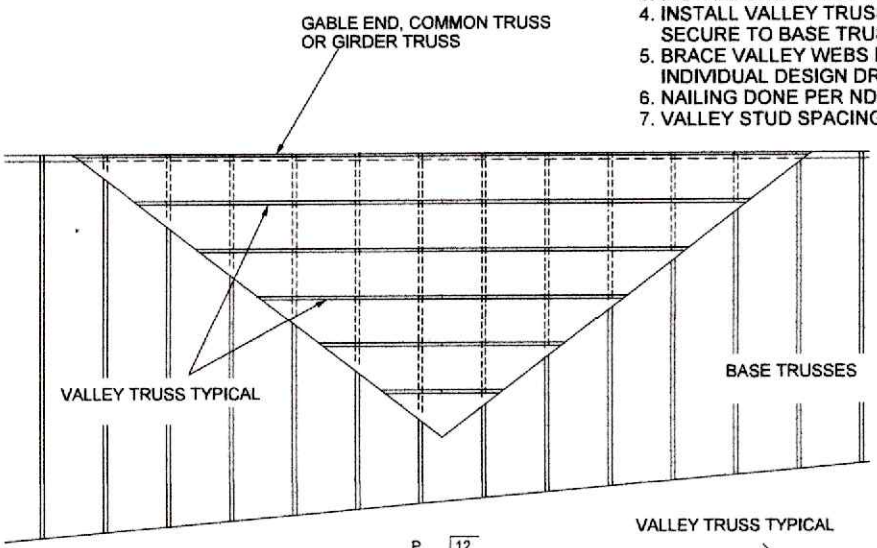

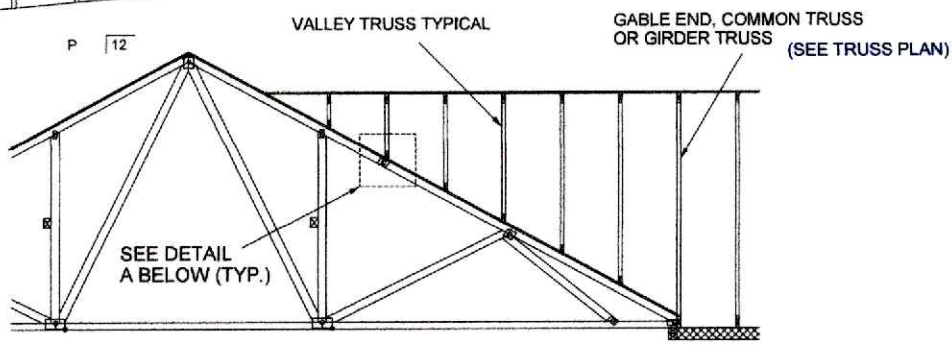

SECURE VALLEY TRUSS W/ TWO ROWS OF 10d NAILS @ 6" OC STAGGERED

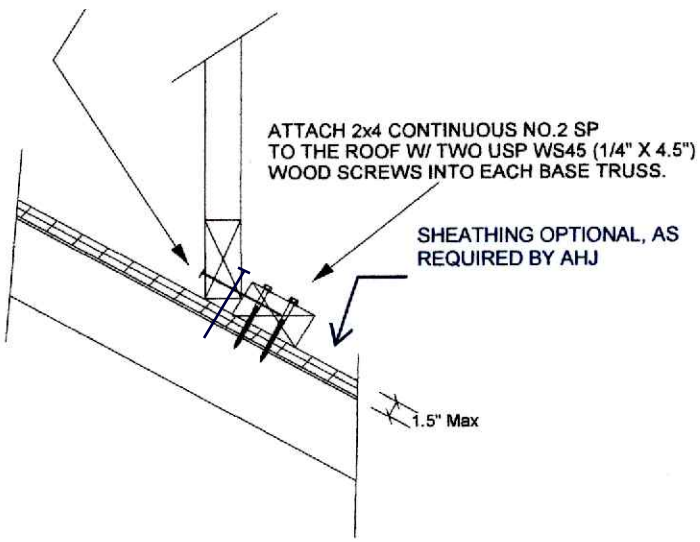

WIND DESIGN PER ASCE 7-10, ASCE 7-16, ASCE 7-22 **175 MPH**
MAX MEAN ROOF HEIGHT = 30 FEET
ROOF PITCH = MINIMUM 3/12 MAXIMUM 6/12
CATEGORY II BUILDING
EXPOSURE C
WIND DURATION OF LOAD INCREASE : 1.60
MAX TOP CHORD TOTAL LOAD = 50 PSF
MAX SPACING = 24" O.C. (BASE AND VALLEY)
MINIMUM REDUCED DEAD LOAD OF 6 PSF ON THE TRUSSES

SEE ENGINERING SHEETS AND TRUSS PLAN FOR DESIGN LOADS

ULTIMATE ENGINEERING DESIGNS, INC.
State Certified EB 0006555
9590 N.W. 89th Avenue, Medley, FL 33178
305-282-7869
ARMANDO R. PEREZ, P.E. 28026

ARMANDO R. PEREZ
LICENSE
No 28026
STATE OF FLORIDA
PROFESSIONAL ENGINEER

04/01/2025

APRIL 1, 2025	WEB BRACING RECOMMENDATIONS	

MAXIMUM TRUSS WEB FORCE (lbs.)[7]								
BRACE BAY SIZE[8]	24"O.C. TRUSS SPACING			48"O.C.TRUSS SPACING			72" O.C. TRUSS SPACING	
	BRACING MATERIAL TYPE			BRACING MATERIAL TYPE			BRACING MATERIAL TYPE	
	A	B	C	A	B	C	B	C
10'-0"	1886	1886	2829	—	—	—	—	—
12'-0"	1572	1572	2358	3143	3143	4715	4715	7074
14'-0"	1347	1347	2021	—	—	—	—	—
16'-0"	1179	1179	1768	2358	2358	3536	—	—
18'-0"	1048	1048	1572	—	—	—	3143	4715
20'-0"	943	943	1414	1886	1886	2829	—	—

TYPE	BRACING MATERIALS
A	2 X 3 #3, STD, CONST (SPF, DF, HF, OR SP)
B	2 X 4 #3, STD, CONST (SPF, DF, HF, OR SP)
C	2 X 6 #3 OR BETTER (SPF, DF, HF, OR SP)

FOR STABILIZERS:
FOR A SPACING OF 24" O.C. ONLY, MITEK "STABILIZER" TRUSS BRACING SYSTEMS CAN BE SUBSTITUTED FOR TYPE A, B AND C BRACING MATERIAL. DIAGONAL BRACING FOR STABILIZERS ARE TO BE PROVIDED AT BAY SIZE INDICATED ABOVE. WHERE DIAPHRAGM BRACING IS REQUIRED AT PITCH BREAKS, STABILIZERS MAY BE REPLACED WITH WOOD BLOCKING. SEE "STABILIZER" TRUSS BRACING INSTALLATION GUIDE AND PRODUCT SPECIFICATION.

GENERAL NOTES

1. DIAGONAL BRACING AND BLOCKING IS REQUIRED TO TRANSFER THE CUMULATIVE LATERAL BRACE FORCE INTO THE ROOF AND/OR CEILING DIAPHRAGM. THE DIAPHRAGM IS AND ANY BLOCKING TO BE DESIGNED BY A QUALIFIED PROFESSIONAL.
2. TABULATED VALUES ARE BASED ON LATERAL BRACE CARRYING 2% OF THE WEB FORCE WITH A DOL = 1.15.
3. DIAGONAL BRACING MATERIAL MUST BE SAME SIZE AND GRADE OR BETTER, AS THE LATERAL BRACE MATERIAL, AND SHALL BE INSTALLED IN SUCH A MANNER THAT IT INTERSECTS WEB MEMBERS AT APPROX. 45 DEGREES AND SHALL BE NAILED AT EACH END AND EACH INTERMEDIATE TRUSS WITH 2 - (0.131"x 3") FOR 2x3 and 2x4 BRACES, AND 3- (0.131"x3") FOR 2x6 BRACES.
4. CONNECT LATERAL BRACE TO EACH TRUSS WITH 2 - (0.131"x3") NAILS FOR 2x3 AND 2x4 LATERAL BRACES AND 3- (0.131"x3") FOR 2x6 LATERAL BRACES.
5. LATERAL BRACE SHOULD BE CONTINUOUS AND SHOULD OVERLAP AT LEAST ONE TRUSS SPACE FOR CONTINUITY.
6. FOR ADDITIONAL GUIDANCE REGARDING DESIGN AND INSTALLATION OF BRACING, CONSULT DSB-89 TEMPORARY BRACING OF METAL PLATE CONNECTED WOOD TRUSSES AND BCSI 1 GUIDE TO GOOD PRACTICE FOR HANDLING, INSTALLING, RESTRAINING & BRACING OF METAL PLATE CONNECTED WOOD TRUSSES, PRODUCED BY STRUCTURAL BUILDING COMPONENT ASSOCIATION. www.sbcindustry.com
7. REFER TO SPECIFIC MiTek/TRENCO TRUSS DESIGN DRAWING FOR WEB MEMBER FORCE.
8. BAY SIZE SHALL BE MEASURED IN BETWEEN THE CENTERS OF PAIRS OF DIAGONALS.

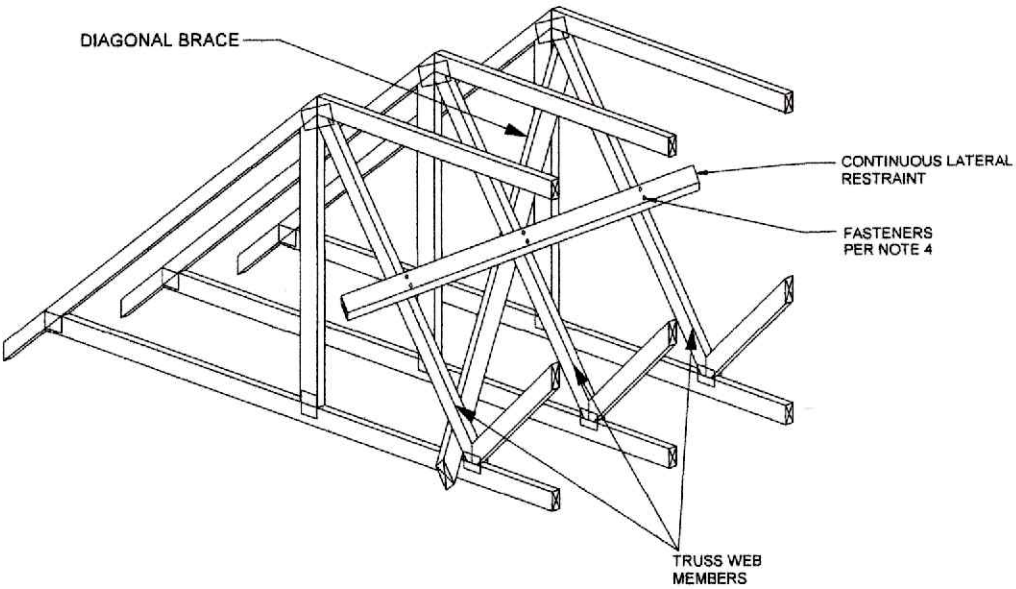

This information is provided to assist in the requirement for permanent bracing of the individual truss web members. Additional bracing may still be required for the stability of the overall roof system. The method shown here is just one method that can be used to provide stability against web buckling. Engineering seal, if any, is supporting the web force chart only.

ULTIMATE ENGINEERING DESIGNS, INC.
State Certified EB 0006555
9590 N.W. 89th Avenue, Medley, FL 33178
305-282-7869
ARMANDO R. PEREZ, P.E. 28026

ARMANDO R. PEREZ
LICENSE
No 28026
STATE OF FLORIDA
PROFESSIONAL ENGINEER

04/01/2025

APRIL 1, 2025	T-BRACE / I-BRACE DETAIL	

Note: T-Bracing / I-Bracing to be used when continuous lateral bracing is impractical. T-Brace / I-Brace must cover 90% of web length.

Note: This detail NOT to be used to convert T-Brace / I-Brace webs to continuous lateral braced webs.

Nailing Pattern		
T-Brace size	Nail Size	Nail Spacing
1x4 or 1x6	10d (0.131" X 3")	8" o.c.
2x4 or 2x6 or 2x8	16d (0.131" X 3.5")	8" o.c.
Note: Nail along entire length of T-Brace / I-Brace (On Two-Ply's Nail to Both Plies)		

	Brace Size for One-Ply Truss	
	Specified Continuous Rows of Lateral Bracing	
Web Size	1	2
2x3 or 2x4	1x4 (*) T-Brace	1x4 (*) I-Brace
2x6	1x6 (*) T-Brace	2x6 I-Brace
2x8	2x8 T-Brace	2x8 I-Brace

	Brace Size for Two-Ply Truss	
	Specified Continuous Rows of Lateral Bracing	
Web Size	1	2
2x3 or 2x4	2x4 T-Brace	2x4 I-Brace
2x6	2x6 T-Brace	2x6 I-Brace
2x8	2x8 T-Brace	2x8 I-Brace

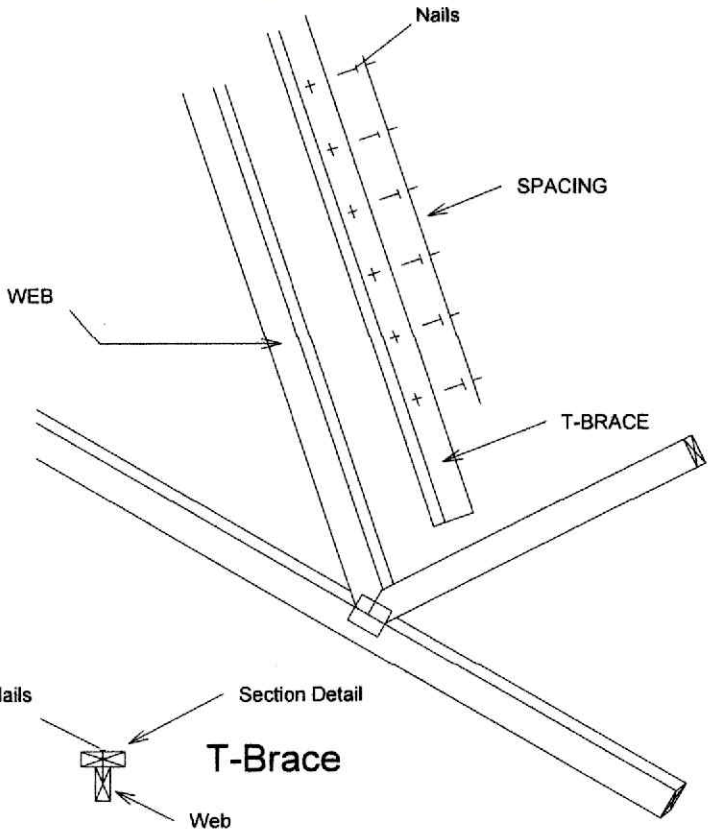

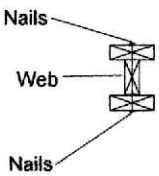

I-Brace

T-Brace / I-Brace must be same species and grade (or better) as web member.
(*) NOTE: If SP webs are used in the truss, 1x4 or 1x6 SP braces must be stress rated boards with design values that are equal to (or better) the truss web design values.
For SP truss lumber grades up to #2 with 1X_ bracing material, use IND 45 for T-Brace/I-Brace
For SP truss lumber grades up to #1 with 1X_ bracing material, use IND 55 for T-Brace/I Brace

ULTIMATE ENGINEERING DESIGNS, INC.
State Certified EB 0006555
9590 N.W. 89th Avenue, Medley, FL 33178
305-282-7869
ARMANDO R. PEREZ, P.E. 28026

ARMANDO R. PEREZ LICENSE No 28026 STATE OF FLORIDA PROFESSIONAL ENGINEER

04/01/2025

APRIL 1, 2025	L-BRACE DETAIL	

Nailing Pattern		
L-Brace size	Nail Size	Nail Spacing
1x4 or 6	10d (0.131" X 3")	8" o.c.
2x4, 6, or 8	16d (0.131" X 3.5")	8" o.c.
Note: Nail along entire length of L-Brace (On Two-Ply's Nail to Both Plies)		

Note: L-Bracing to be used when continuous lateral bracing is impractical. L-brace must cover 90% of web length.

	L-Brace Size for One-Ply Truss	
	Specified Continuous Rows of Lateral Bracing	
Web Size	1	2
2x3 or 2x4	1x4	***
2x6	1x6	***
2x8	2x8	***

*** DIRECT SUBSTITUTION NOT APLICABLE.

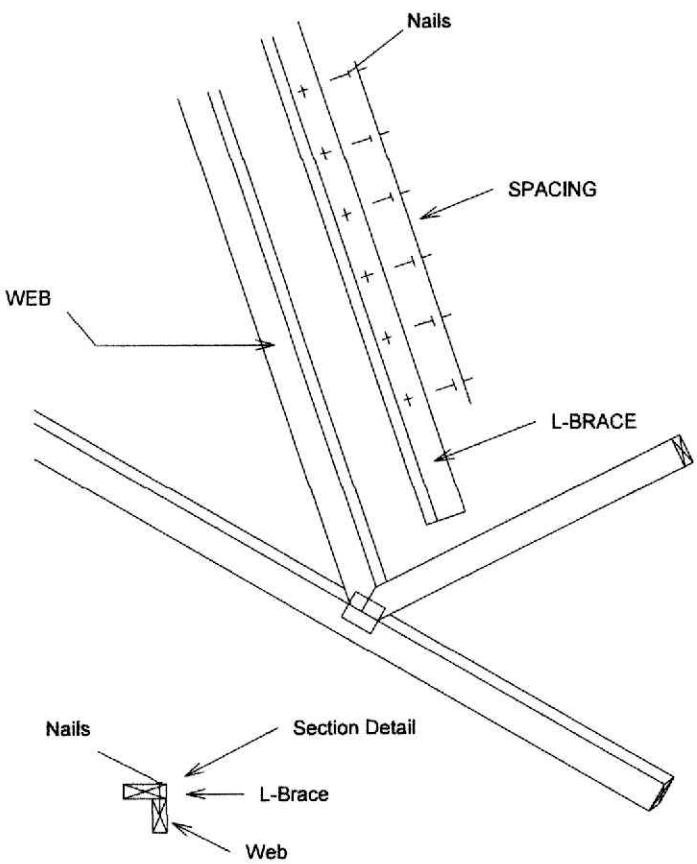

	L-Brace Size for Two-Ply Truss	
	Specified Continuous Rows of Lateral Bracing	
Web Size	1	2
2x3 or 2x4	2x4	***
2x6	2x6	***
2x8	2x8	***

*** DIRECT SUBSTITUTION NOT APLICABLE.

L-Brace must be same species grade (or better) as web member.

ULTIMATE ENGINEERING DESIGNS, INC.
State Certified EB 0006555
9590 N.W. 89th Avenue, Medley, FL 33178
305-282-7869
ARMANDO R. PEREZ, P.E. 28026

ARMANDO R. PEREZ
LICENSE
No 28026
STATE OF
FLORIDA
PROFESSIONAL ENGINEER

04/01/2025

APRIL 1, 2025	SCAB-BRACE DETAIL	

Note: Scab-Bracing to be used when continuous lateral bracing at midpoint (or T-Brace) is impractical.
Scab must cover full length of web +/- 6".

*** THIS DETAIL IS NOT APLICABLE WHEN BRACING IS ***
REQUIRED AT 1/3 POINTS OR I-BRACE IS SPECIFIED.

APPLY 2x___ SCAB TO ONE FACE OF WEB WITH
2 ROWS OF 10d (0.131" X 3") NAILS SPACED 6" O.C.
SCAB MUST BE THE SAME GRADE, SIZE AND
SPECIES (OR BETTER) AS THE WEB.

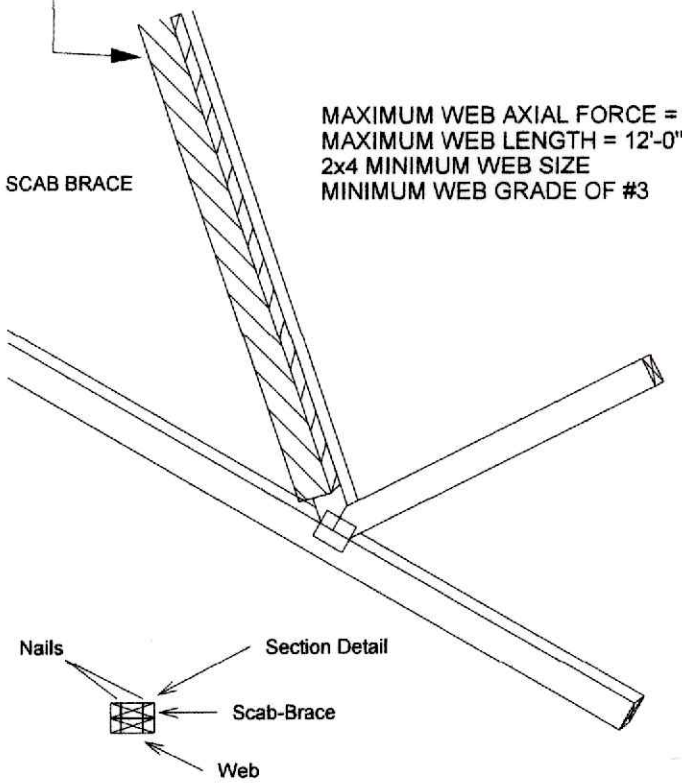

MAXIMUM WEB AXIAL FORCE = 2500 lbs
MAXIMUM WEB LENGTH = 12'-0"
2x4 MINIMUM WEB SIZE
MINIMUM WEB GRADE OF #3

Scab-Brace must be same species grade (or better) as web member.

ULTIMATE ENGINEERING DESIGNS, INC.
State Certified EB 0006555
9590 N.W. 89th Avenue, Medley, FL 33178
305-282-7869
ARMANDO R. PEREZ, P.E. 28026

ARMANDO R. PEREZ
LICENSE
No 28026
STATE OF
FLORIDA
PROFESSIONAL ENGINEER

04/01/2025