ULTIMATE ENGINEERING DESIGNS, INC.

TRUSSCORP INTERNATIONAL INC.

ENGINEERING COVER SHEET

This cover sheet is provided as per Florida Statute 61G15-23.001, F.A.C. in lieu signing and sealing each individual sheet. An index sheet of the quantity of truss designs specified below is attached with the identification and date of each drawing.

Quantity of Truss Designs: **123**

LAZ CONST. - 12715 ROLLING ROAD DR. **REV 6/5/25**

Building Authority: **PINECREST, FL.**

Design Loads:
Roof:30-15-0-10 psf
Wind: 175 mph
Exposure.C
Kd: .85
HVHZ
DOL: Plate: 1.33 Lumber: 1.33

Building Code: FBC 2020 / TPI 2014 / ASCE 7-16

Software Used: MITEK 2023 v 8.7

Attachments: Truss placement diagram, Truss profile list, Certificate of Competency, Product approvals, Valley detail, Web bracing recommendation.

Engineer of Truss Design Package:

ULTIMATE ENGINEERING DESIGNS INC.
9590 N.W. 89th Avenue
MEDLEY, FL 33178
PHONE: (305) 882-8826 (Office)
ARMANDO R. PEREZ. P.E. 28026

ARMANDO R. PEREZ LICENSE No 28026 STATE OF FLORIDA PROFESSIONAL ENGINEER

This item has been digitally Signed and Sealed by Armando R. Perez, P.E. 28026 on the date adjacent to the seal .

Printed copies of this document are not considered Signed and Sealed and the signature must be verified on any electronic copies.

ARMANDO R. PEREZ P.E. 28026
9590 NW 89 AVE MEDLEY, FL 33178
PH: 305-882-8826

CUETO ENGINEERING
SHOP DRAWING / SUBMITTAL REVIEW
[✓] APPROVED [ ] REJECTED
[ ] APPROVED AS NOTED [ ] REVISE & RESUBMIT
This submittal has been reviewed for design conformity and general compliance with Contract Documents. The Contractor is solely responsible for: confirming all dimensions and quantities; procedures, means, methods, techniques, and sequences of fabrication and construction; coordination of work for all trades; and full compliance with design documents.
By : Nestor A. Cueto, PE Date : 06-06-25

Armando R Perez

Digitally signed by Armando R Perez
Date: 2025.06.08 19:41:27 -04'00'

^

Trusscorp International, Inc.
9590 NW 8th Ave
Medley, FL 33178
(305) 882-8826 Fax: (305) 887-6008

To:

,

Reaction

Job Number: **B2500171**
Page: 1
Date: 06/05/25 12:50:58

Project: LAZ CONST. Block No:
Model: 12715 ROLLING RD Lot No:

Contact:	Site:	Office:
Name:		
Phone:		
Fax:	.F.	

Deliver To:

Account No: 254504030
Designer: /
Salesperson: Inside Sales
Quote Number: B2500171
P.O. Number:

	Qty:	Truss Id:	Span:	Truss Type:	Slope	Reactions:
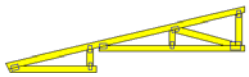	2	**CJ5**	**06-11-06**	DIAGONAL HIP	**2.83**	Joint 3: 1055.86, -1407.85 Joint 8: 396.87, -554.60 Joint 10
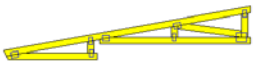	4	**CJ5A**	**06-11-06**	DIAGONAL HIP	**2.12**	Joint 3: 1106.66, -1460.27 Joint 8: 400.06, -534.99 Joint 10
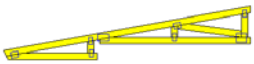	5	**CJ5AT**	**06-11-06**	DIAGONAL HIP	**2.12**	Joint 3: 1340.34, -1693.21 Joint 8: 484.18, -617.74 Joint 10
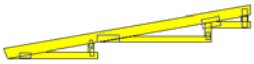	2	**CJ5C**	**06-11-06**	DIAGONAL HIP	**2.12**	Joint 3: 1387.28, -1750.42 Joint 8: 443.51, -560.59 Joint 10
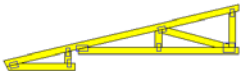	4	**CJ5T**	**06-11-06**	DIAGONAL HIP	**2.83**	Joint 3: 1108.41, -1347.04 Joint 8: 508.68, -678.96 Joint 10
	1	**CJ7**	**09-09-05**	DIAGONAL HIP	**2.83**	Joint 3: 1182.02, -1496.64 Joint 8: 618.22, -828.49 Joint 10
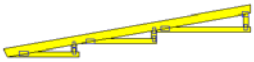	2	**CJ7B**	**09-07-13**	DIAGONAL HIP	**2.12**	Joint 3: 1285.19, -1604.73 Joint 8: 530.98, -662.92 Joint 10
	1	**CJ7T**	**09-09-05**	DIAGONAL HIP	**2.83**	Joint 3: 1447.95, -1762.69 Joint 8: 760.55, -970.72 Joint 10
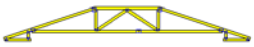	1	**H1**	**21-04-00**	HIP	**4.00**	Joint 3: 1445.02, -1326.07 Joint 7: 1459.43, -1338.36 Joint 13 Joint 14
	1	**H10**	**25-00-00**	HALF HIP	**3.00**	Joint 3: 1654.47, -1336.78 Joint 8: 1356.30, -988.43 Joint 13
	1	**H10T**	**25-00-00**	HIP	**3.00**	Joint 3: 1725.80, -1821.43 Joint 7: 1758.64, -1855.09 Joint 14 Joint 15
	1	**H11**	**25-00-00**	HALF HIP	**3.00**	Joint 3: 1670.03, -1330.86 Joint 9: 1334.08, -991.18 Joint 14
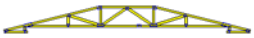	1	**H11T**	**25-00-00**	HIP	**3.00**	Joint 3: 1724.51, -1806.38 Joint 9: 1746.59, -1828.00 Joint 17 Joint 18
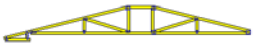	1	**H12**	**25-00-00**	HIP	**3.00**	Joint 3: 1661.31, -1340.54 Joint 8: 1365.51, -1064.74 Joint 13
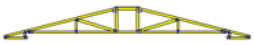	1	**H12T**	**25-00-00**	HIP	**3.00**	Joint 3: 1730.22, -1762.51 Joint 8: 1754.22, -1786.60 Joint 15 Joint 16
	1	**H14**	**46-01-14**	HIP	**3.00** 3.22	Joint 3: 1608.92, -1237.78 Joint 16: 624.56, -593.77 Joint 23: 3486.90, -2432.57 Joint 34 Joint 35
	1	**H15**	**46-01-14**	HIP	**3.00** 3.22	Joint 1: 279.23, -145.29 Joint 3: 1595.93, -1204.03 Joint 7: 279.23, -145.29 Joint 8: 437.88, -395.01 Joint 10: 260.85, -129.68
	1	**H16**	**46-01-14**	HIP	**3.00** 3.22	Joint 3: 1607.04, -1187.14 Joint 14: 635.25, -486.22 Joint 20: 3559.66, -2596.39 Joint 30 Joint 31
	1	**H17**	**46-01-14**	HIP	**3.00**	Joint 3: 1639.98, -1232.43 Joint 14: 748.46, -531.80 Joint 20: 3375.72, -2538.36 Joint 26 Joint 27
	1	**H18**	**46-01-14**	HIP	**3.00**	Joint 3: 1629.43, -1205.97 Joint 16: 715.15, -481.50 Joint 22: 3452.56, -2616.35 Joint 28 Joint 30

Trusscorp International, Inc.
9590 NW 8th Ave
Medley, FL 33178
(305) 882-8826 Fax: (305) 887-6008

To:

,

Reaction

Job Number: **B2500171**
Page: 2
Date: 06/05/25 12:51:36

Project: LAZ CONST. Block No:
Model: 12715 ROLLING RD Lot No:

Contact:	Site:	Office:
Name:		
Phone:		
Fax:	.F.	

Deliver To:

Account No: 254504030
Designer: /
Salesperson: Inside Sales
Quote Number: B2500171
P.O. Number:

	Qty:	Truss Id:	Span:	Truss Type:	Slope	Reactions:
	1	**H19**	**22-05-00**	HIP	**3.00**	Joint 3 1468.61 -1271.47; Joint 8 1533.90 -1325.56; Joint 15; Joint 16
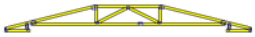	1	**H1T**	**21-04-00**	HIP	**3.00**	Joint 3 1500.24 -1685.96; Joint 7 1527.89 -1716.69; Joint 13; Joint 14
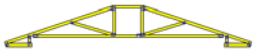	1	**H2**	**21-04-00**	HIP	**4.00**	Joint 3 1440.37 -1268.79; Joint 8 1450.75 -1275.70; Joint 14; Joint 15
	1	**H20**	**22-05-00**	HIP	**3.00**	Joint 3 1523.62 -1253.56; Joint 9 1467.63 -1205.66; Joint 15; Joint 16
	1	**H21**	**22-05-00**	HIP	**3.00**	Joint 3 1548.40 -1724.71; Joint 9 1619.68 -1802.48; Joint 16; Joint 17
	1	**H22**	**22-05-00**	HIP	**3.00**	Joint 3 1549.64 -1670.88; Joint 8 1618.43 -1743.30; Joint 15; Joint 16
	1	**H23**	**22-05-00**	HIP	**3.00**	Joint 3 1550.17 -1610.60; Joint 7 1617.91 -1678.79; Joint 13; Joint 14
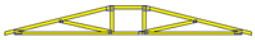	1	**H2T**	**21-04-00**	HIP	**3.00**	Joint 2 1252.08 -1444.79; Joint 7 1252.08 -1444.79
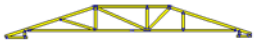	1	**H3T**	**28-01-08**	HIP	**4.00**	Joint 3 1112.60 -915.61; Joint 9 547.86 -387.78; Joint 12 734.05 -637.34; Joint 13 1325.18 -991.29; Joint 16
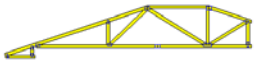	1	**H4**	**21-04-00**	HIP	**4.00**	Joint 3 1443.89 -1220.47; Joint 9 1175.01 -1081.01; Joint 13
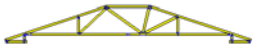	1	**H4T**	**28-01-08**	HIP	**4.00**	Joint 3 1026.53 -829.59; Joint 8 624.95 -519.11; Joint 11 451.00 -199.03; Joint 12 1737.46 -1414.12; Joint 15
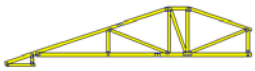	1	**H5**	**21-04-00**	HIP	**4.00**	Joint 3 1443.58 -1182.68; Joint 10 1175.31 -1056.67; Joint 15
	1	**H5T**	**28-01-08**	HIP	**4.00**	Joint 3 990.87 -703.09; Joint 14 1487.26 -1250.14; Joint 15 1393.99 -974.30; Joint 19; Joint 20
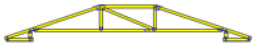	1	**H6**	**20-00-10**	HIP	**4.00**	Joint 3 1375.84 -1295.90; Joint 6 1387.68 -1306.43; Joint 12; Joint 13
	1	**H7**	**20-00-10**	HIP	**4.00**	Joint 3 1370.13 -1230.78; Joint 8 1380.06 -1237.23; Joint 14; Joint 15
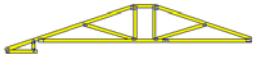	1	**H8A**	**20-00-10**	HIP	**4.00**	Joint 3 1388.45 -1255.04; Joint 8 1052.84 -933.75; Joint 12
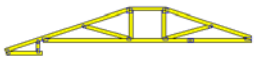	1	**H9T**	**16-11-10**	HIP	**4.00**	Joint 3 1296.74 -1571.96; Joint 8 976.16 -1171.09; Joint 12
	1	**HG1**	**21-04-00**	HIP GIRDER	**4.00**	Joint 3 2112.12 -2380.18; Joint 7 2122.82 -2397.67; Joint 13; Joint 15
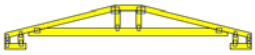	1	**HG10**	**11-06-00**	HIP GIRDER	**3.00**	Joint 3 1109.68 -1437.54; Joint 6 1109.68 -1437.54; Joint 13; Joint 14
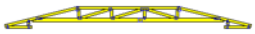	1	**HG11T**	**21-04-00**	HIP GIRDER	**3.00**	Joint 3 2363.74 -2805.29; Joint 8 2394.21 -2839.94; Joint 16; Joint 17

Trusscorp International, Inc.
9590 NW 8th Ave
Medley, FL 33178
(305) 882-8826 Fax: (305) 887-6008

To:

,

Reaction

Job Number: **B2500171**
Page: 3
Date: 06/05/25 12:52:13

Project: LAZ CONST. Block No:
Model: 12715 ROLLING RD Lot No:

Contact:	Site:	Office:
Name:		
Phone:		
Fax:	.F.	

Deliver To:

Account No: 254504030
Designer: /
Salesperson: Inside Sales
Quote Number: B2500171
P.O. Number:

	Qty:	Truss Id:	Span:	Truss Type:	Slope	Reactions:
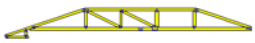	1	**HG2T**	**28-02-10**	HIP GIRDER	**4.00**	Joint 3: 1825.83, -1854.49 Joint 8: 517.05, -500.06 Joint 9: 898.49, -809.80 Joint 10: 3061.34, -3128.12 Joint 14
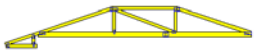	1	**HG3A**	**20-00-10**	HIP GIRDER	**4.00**	Joint 3: 2524.73, -2620.11 Joint 6: 2822.41, -3157.52 Joint 10
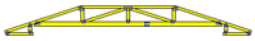	1	**HG3T**	**20-00-10**	HIP GIRDER	**4.00**	Joint 3: 2272.42, -2768.40 Joint 7: 2295.36, -2795.76 Joint 14 Joint 15
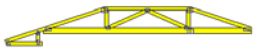	1	**HG4T**	**16-11-10**	HIP GIRDER	**4.00**	Joint 3: 2054.57, -2593.87 Joint 7: 1722.89, -2108.34 Joint 11
	1	**HG5T**	**25-00-00**	HIP GIRDER	**3.00**	Joint 3: 2812.17, -2791.63 Joint 8: 2812.17, -2790.28
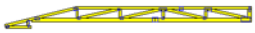	1	**HG6**	**25-00-00**	HALF HIP	**3.00**	Joint 3: 2352.26, -2450.32 Joint 10: 2033.44, -2079.13 Joint 16
	1	**HG7**	**46-01-14**	HIP GIRDER	**3.00**	Joint 3: 2377.93, -2458.67 Joint 14: 805.34, -971.33 Joint 20: 5121.47, -5446.85 Joint 27 Joint 28
	1	**HG8**	**22-05-00**	HIP GIRDER	**3.00**	Joint 3: 2527.67, -2438.14 Joint 9: 2691.09, -2596.35 Joint 17 Joint 18
	1	**HG9**	**22-05-00**	HIP GIRDER	**3.00**	Joint 3: 2571.64, -2915.50 Joint 10: 2674.36, -3026.82 Joint 20 Joint 21
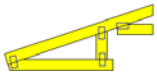	16	**J1**	**01-00-00**	JACK-OPEN	**4.00**	Joint 3: 531.21, -881.25 Joint 4: 202.58, -110.20 Joint 6
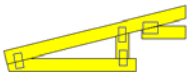	26	**J1A**	**01-00-00**	JACK-OPEN	**3.00**	Joint 3: 550.68, -916.46 Joint 4: 241.73, -131.97 Joint 6
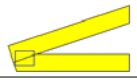	16	**J2**	**02-00-00**	JACK-OPEN	**4.00**	Joint 2: 190.17, -275.70 Joint 3: 50.88, -47.76
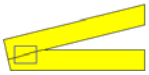	26	**J2A**	**02-00-00**	JACK-OPEN	**3.00**	Joint 2: 185.72, -269.05 Joint 3: 54.37, -53.13
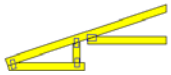	6	**J3**	**03-00-00**	JACK-OPEN	**4.00**	Joint 3: 525.28, -820.28 Joint 4: 106.35, -184.47 Joint 5: 45.70 Joint 6
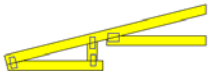	12	**J3A**	**03-00-00**	JACK-OPEN	**3.00**	Joint 3: 533.56, -839.43 Joint 4: 97.84, -164.85 Joint 5: 44.71 Joint 6
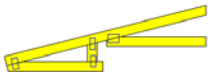	12	**J3AT**	**03-00-00**	JACK-OPEN	**3.00**	Joint 3: 679.09, -984.96 Joint 4: 126.04, -193.04 Joint 5: 44.71 Joint 6
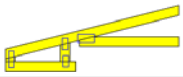	2	**J3B**	**03-00-00**	JACK-OPEN	**3.00**	Joint 3: 564.19, -809.76 Joint 4: 121.59, -184.41 Joint 5: 45.08 Joint 7
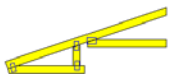	9	**J3T**	**03-00-00**	JACK-OPEN	**4.00**	Joint 3: 525.27, -820.27 Joint 4: 106.34, -184.45 Joint 5: 45.70 Joint 6
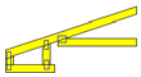	1	**J3TA**	**03-00-00**	JACK-OPEN	**4.00**	Joint 3: 397.75, -605.05 Joint 4: 108.68, -186.64 Joint 5: 47.94 Joint 7
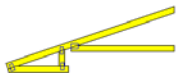	9	**J5**	**05-00-00**	JACK-OPEN	**4.00**	Joint 3: 625.98, -943.28 Joint 4: 207.30, -406.33 Joint 5: 83.29, -11.73 Joint 6

Trusscorp International, Inc.
9590 NW 8th Ave
Medley, FL 33178
(305) 882-8826 Fax: (305) 887-6008

Project: LAZ CONST. Block No:
Model: 12715 ROLLING RD Lot No:

Contact:	Site:	Office:
Name:		
Phone:		
Fax:	.F.	

To:

,

Deliver To:

Reaction

Job Number: **B2500171**
Page: 4
Date: 06/05/25 12:52:50

Account No: 254504030
Designer: /
Salesperson: Inside Sales
Quote Number: B2500171
P.O. Number:

	Qty:	Truss Id:	Span:	Truss Type:	Slope	Reactions:
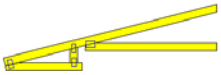	25	**J5A**	**05-00-00**	JACK-OPEN	**3.00**	Joint 3 633.68 -985.25; Joint 4 197.90 -381.21; Joint 5 82.87 -11.74; Joint 6
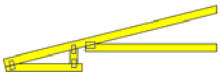	22	**J5AT**	**05-00-00**	JACK-OPEN	**3.00**	Joint 3 801.55 -1153.12; Joint 4 255.24 -438.55; Joint 5 82.87 -16.06; Joint 6
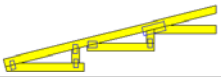	2	**J5B**	**04-09-14**	JACK-OPEN	**3.00**	Joint 3 631.12 -983.59; Joint 5 208.99 -374.94; Joint 6 48.13; Joint 8
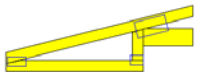	7	**J5C**	**05-00-00**	JACK-OPEN	**3.00**	Joint 1 342.63 -419.86; Joint 3 133.10 -194.31; Joint 4 248.93 -309.89
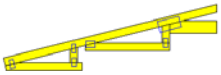	2	**J5E**	**05-00-00**	JACK-OPEN	**3.00**	Joint 3 639.85 -995.71; Joint 5 226.46 -391.90; Joint 6 37.51; Joint 8
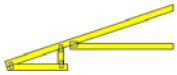	13	**J5T**	**05-00-00**	JACK-OPEN	**4.00**	Joint 3 790.48 -1107.78; Joint 4 268.48 -467.51; Joint 5 83.29 -16.25; Joint 6
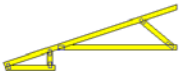	2	**J7**	**07-00-00**	JACK-OPEN	**4.00**	Joint 3 687.09 -906.60; Joint 5 28.09 -101.68; Joint 7 355.85 -478.45; Joint 8
	1	**J7D**	**07-00-00**	JACK-OPEN	**4.00**	Joint 3 567.13 -739.39; Joint 5 21.80 -92.25; Joint 7 378.31 -504.18; Joint 9
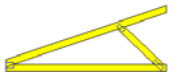	1	**J7E**	**07-00-00**	JACK-OPEN	**4.00**	Joint 1 374.85 -424.55; Joint 3 3.17 -32.90; Joint 5 422.30 -562.08
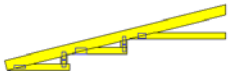	6	**J7F**	**07-00-00**	JACK-OPEN	**3.00**	Joint 3 716.43 -993.23; Joint 6 266.87 -446.74; Joint 7 75.48 -49.08; Joint 9
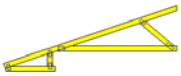	3	**J7T**	**07-00-00**	JACK-OPEN	**4.00**	Joint 3 858.95 -1090.93; Joint 5 40.94 -114.54; Joint 7 446.14 -568.75; Joint 8
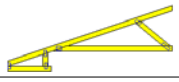	1	**J7TA**	**07-00-00**	JACK-OPEN	**4.00**	Joint 3 649.32 -839.73; Joint 5 27.15 -98.43; Joint 7 359.05 -486.32; Joint 8
	1	**J7TB**	**07-00-00**	JACK-OPEN	**4.00**	Joint 2 437.04 -574.76; Joint 4 4.73 -63.05; Joint 6 416.89 -571.77
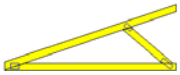	1	**J7TC**	**07-00-00**	JACK-OPEN	**4.00**	Joint 1 375.10 -435.05; Joint 3 3.65 -43.10; Joint 5 415.70 -541.38
	23	**T1**	**21-04-00**	COMMON	**4.00**	Joint 3 1445.50 -1174.57; Joint 7 1458.96 -1184.78; Joint 13; Joint 14
	1	**T10**	**21-04-00**	COMMON	**3.00**	Joint 3 929.82 -760.44; Joint 7 292.63 -413.58; Joint 9 1485.42 -1487.13; Joint 12
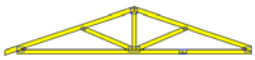	1	**T10T**	**16-11-10**	COMMON	**4.00**	Joint 2 1014.06 -1219.93; Joint 6 987.00 -1083.30
	1	**T11**	**21-04-00**	COMMON	**3.00**	Joint 3 934.99 -762.34; Joint 7 474.03 -325.60; Joint 10 1470.74 -1165.39; Joint 14; Joint 15
	3	**T12**	**25-00-00**	COMMON	**3.00**	Joint 3 1635.17 -1260.88; Joint 9 1655.14 -1273.87; Joint 16; Joint 17
	1	**T12T**	**25-00-00**	COMMON	**3.00**	Joint 3 1725.57 -1704.72; Joint 9 1745.54 -1722.34; Joint 16; Joint 17

Trusscorp International, Inc.
9590 NW 8th Ave
Medley, FL 33178
(305) 882-8826 Fax: (305) 887-6008

To:

,

Reaction

Job Number: **B2500171**
Page: 5
Date: 06/05/25 12:53:28

Project: LAZ CONST. Block No:
Model: 12715 ROLLING RD Lot No:

Contact:	Site:	Office:
Name:		
Phone:		
Fax:	.F.	

Deliver To:

Account No: 254504030
Designer: /
Salesperson: Inside Sales
Quote Number: B2500171
P.O. Number:

	Qty:	Truss Id:	Span:	Truss Type:	Slope	Reactions:
	1	**T13**	**25-00-00**	COMMON	**3.00**	Joint 3 1654.05 -1275.18; Joint 8 1496.31 -1133.07; Joint 16; Joint 17
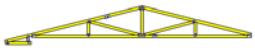	5	**T13A**	**25-00-00**	COMMON	**3.00**	Joint 3 1660.38 -1285.18; Joint 8 1323.11 -972.23; Joint 13
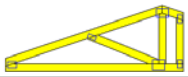	3	**T14**	**07-00-00**	ROOF SPECIAL	**4.00**	Joint 1 376.98 -496.53; Joint 5 400.58 -683.63
	3	**T17**	**21-04-00**	COMMON	**3.00**	Joint 3 929.69 -733.14; Joint 7 553.88 -381.95; Joint 10 1517.58 -1239.43; Joint 13; Joint 14
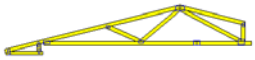	7	**T18**	**15-06-06**	COMMON	**3.00**	Joint 3 1147.51 -1068.23; Joint 7 849.21 -842.84; Joint 10
	1	**T19**	**22-05-00**	ROOF SPECIAL	**3.00**	Joint 2 1224.12 -1005.49; Joint 8 1595.46 -1266.01; Joint 14
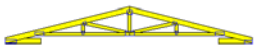	10	**T19A**	**21-09-00**	ROOF SPECIAL	**3.00**	Joint 1 1207.87 -917.97; Joint 7 1191.40 -931.47
	1	**T2**	**21-04-00**	COMMON	**4.00**	Joint 3 1456.56 -1185.08; Joint 7 1281.50 -1021.54; Joint 14; Joint 15
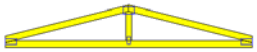	1	**T20**	**11-06-00**	COMMON	**3.00**	Joint 1 632.50 -797.31; Joint 3 632.50 -797.31
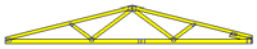	1	**T21**	**21-09-00**	COMMON	**3.00**	Joint 1 1177.63 -916.70; Joint 6 1214.87 -951.50
	1	**T22**	**22-05-00**	COMMON	**3.00**	Joint 3 1427.24 -1419.86; Joint 7 1609.07 -1626.48; Joint 14; Joint 15
	8	**T23**	**22-05-00**	ROOF SPECIAL	**3.00**	Joint 3 1550.17 -1576.70; Joint 7 1617.91 -1642.47; Joint 13; Joint 14
	6	**T3**	**21-04-00**	COMMON	**4.00**	Joint 3 1459.84 -1192.68; Joint 7 1165.72 -912.25; Joint 11
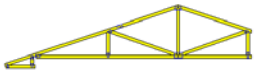	1	**T4**	**21-04-00**	COMMON	**4.00**	Joint 3 1443.40 -1140.52; Joint 9 1175.50 -987.72; Joint 12
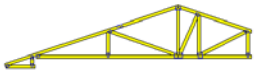	1	**T4A**	**21-04-00**	COMMON	**4.00**	Joint 3 1037.19 -816.62; Joint 10 85.27 -319.61; Joint 11 1751.91 -1396.88; Joint 14
	1	**T5T**	**28-01-08**	COMMON	**4.00**	Joint 3 976.50 -732.01; Joint 13 1267.46 -1055.96; Joint 14 1467.02 -908.33; Joint 18; Joint 20
	1	**T6T**	**28-01-08**	COMMON	**4.00**	Joint 3 962.06 -685.29; Joint 13 1463.13 -1225.85; Joint 14 1447.14 -910.14; Joint 17; Joint 19
	9	**T7**	**20-00-10**	COMMON	**4.00**	Joint 3 1375.33 -1148.49; Joint 7 1388.18 -1158.50; Joint 13; Joint 14
	1	**T7A**	**20-00-10**	COMMON	**4.00**	Joint 3 1388.84 -1164.10; Joint 7 1154.85 -979.85; Joint 12
	1	**T7B**	**20-00-10**	COMMON	**4.00**	Joint 3 1389.80 -1168.35; Joint 7 1094.82 -883.93; Joint 11

Trusscorp International, Inc.
9590 NW 8th Ave
Medley, FL 33178
(305) 882-8826 Fax: (305) 887-6008

To:

,

Reaction

Job Number: **B2500171**
Page: 6
Date: 06/05/25 12:54:04

Project: LAZ CONST. Block No:
Model: 12715 ROLLING RD Lot No:

Contact:	Site:	Office:
Name:		
Phone:		
Fax:	.F.	

Deliver To:

Account No: 254504030
Designer: /
Salesperson: Inside Sales
Quote Number: B2500171
P.O. Number:

	Qty:	Truss Id:	Span:	Truss Type:	Slope	Reactions:
	6	**T8**	**20-00-10**	ROOF SPECIAL	**4.00**	Joint 3: 1381.76, -1146.90 Joint 11: 1381.76, -1146.90
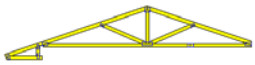	1	**T9T**	**16-11-10**	COMMON	**4.00**	Joint 3: 1297.01, -1461.82 Joint 7: 975.89, -1069.33 Joint 10
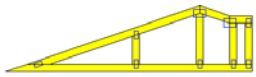	1	**V10**	**10-00-00**	VALLEY	**4.00**	Joint 1: 198.96, -155.93 Joint 6: 28.68, -48.78 Joint 7: 134.78, -145.60 Joint 8: 116.76, -179.59 Joint 9: 509.09, -733.27
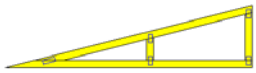	1	**V10A**	**10-00-00**	VALLEY	**3.00**	Joint 1: 207.57, -175.11 Joint 4: 160.29, -239.91 Joint 5: 585.79, -721.00
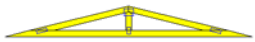	1	**V12**	**12-00-00**	VALLEY	**3.00**	Joint 1: 233.65, -269.54 Joint 3: 233.65, -269.54 Joint 4: 611.75, -739.36
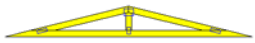	1	**V12C**	**12-00-00**	VALLEY	**2.97**	Joint 1: 233.01, -268.53 Joint 3: 233.01, -268.53 Joint 4: 610.51, -737.92
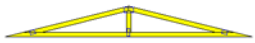	1	**V16**	**16-00-00**	VALLEY	**3.00**	Joint 1: 330.68, -327.27 Joint 3: 330.68, -327.27 Joint 4: 865.90, -856.96
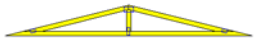	1	**V16C**	**16-00-00**	VALLEY	**2.97**	Joint 1: 330.00, -326.50 Joint 3: 330.00, -326.50 Joint 4: 864.75, -856.72
	4	**V2**	**02-00-00**	VALLEY	**0.00**	Joint 1: 21.88 Joint 2: 21.88
	1	**V20**	**20-00-00**	VALLEY	**3.00**	Joint 1: 205.84, -175.78 Joint 5: 205.84, -175.77 Joint 6: 589.55, -498.21 Joint 8: 359.33, -278.47 Joint 9: 589.55, -498.21
	1	**V20C**	**20-00-00**	VALLEY	**2.97**	Joint 1: 205.31, -175.39 Joint 5: 205.23, -175.32 Joint 6: 588.61, -496.91 Joint 8: 359.83, -280.20 Joint 9: 588.64, -496.92
	1	**V2A**	**02-00-00**	GABLE	**0.00**	Joint 1: 21.67 Joint 2: 21.67
	2	**V4**	**04-00-00**	GABLE	**0.00**	Joint 1: 43.33 Joint 2: 43.33
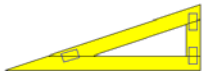	4	**V4A**	**04-00-00**	VALLEY	**4.00**	Joint 1: 163.38, -204.94 Joint 3: 185.75, -263.56
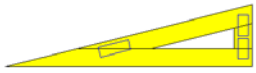	1	**V4B**	**04-00-00**	VALLEY	**3.00**	Joint 1: 151.99, -196.69 Joint 3: 163.36, -226.48
	1	**V4C**	**04-00-00**	VALLEY	**0.00**	Joint 1: 42.96 Joint 2: 42.96
	3	**V6**	**06-00-00**	VALLEY	**4.00**	Joint 1: 272.55, -334.22 Joint 3: 304.68, -430.16
	1	**V6A**	**06-00-00**	VALLEY	**3.00**	Joint 1: 260.48, -334.71 Joint 3: 279.64, -385.57
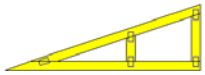	1	**V7**	**06-08-00**	VALLEY	**4.00**	Joint 1: 151.04, -125.27 Joint 4: 73.49, -103.35 Joint 5: 435.60, -610.93
	2	**V8**	**08-00-00**	VALLEY	**3.00**	Joint 1: 309.69, -405.65 Joint 3: 309.69, -405.65

Trusscorp International, Inc.
9590 NW 8th Ave
Medley, FL 33178
(305) 882-8826 Fax: (305) 887-6008

To:

,

Reaction

Job Number: **B2500171**
Page: 7
Date: 06/05/25 12:54:43

Project: LAZ CONST. Block No:
Model: 12715 ROLLING RD Lot No:

Contact:	Site:	Office:
Name:		
Phone:		
Fax:	.F.	

Deliver To:

Account No: 254504030
Designer: /
Salesperson: Inside Sales
Quote Number: B2500171
P.O. Number:

	Qty:	Truss Id:	Span:	Truss Type:	Slope	Reactions:
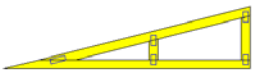	1	**V8A**	**08-00-00**	VALLEY	**3.00**	Joint 1: 159.93, -152.40 Joint 4: 113.02, -152.95 Joint 5: 468.78, -633.81
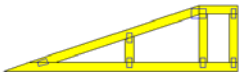	1	**V8B**	**08-00-00**	VALLEY	**4.00**	Joint 1: 153.24, -112.29 Joint 5: 59.98, -86.28 Joint 6: 148.31, -207.88 Joint 7: 421.65, -621.07
	1	**V8C**	**08-00-09**	VALLEY	**2.97**	Joint 1: 311.03, -404.99 Joint 3: 311.03, -404.99

Job	Truss	Truss Type	Qty	Ply	12715 ROLLING ROAD DR, PINECREST, FL.
12715	CJ5	Diagonal Hip Girder	2	1	Job Reference (optional)

Trusscorp Int., 9590 NW 89 AVE, Medley, FL — 8.820 s Dec 4 2024 MiTek Industries, Inc. Thu Jun 5 12:41:43 2025 Page 1

ID:_GLN6EJBZ1GCD23RDL_tAxzKvJz-t6BxAG7q8ykQY4YpnTlBYkvUFct4R76mdr91C8z9LOs

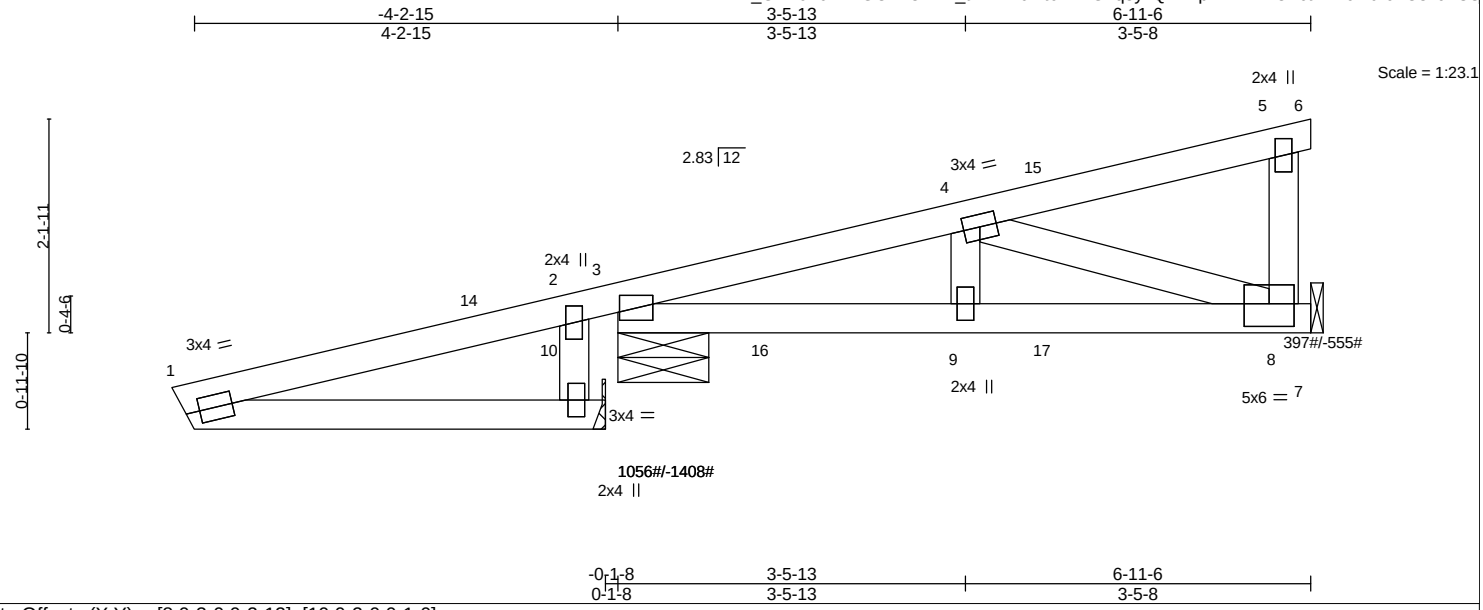

Plate Offsets (X,Y)-- [8:0-3-0,0-2-12], [10:0-2-0,0-1-0]

LOADING (psf)		SPACING-	2-0-0	CSI.		DEFL.	in	(loc)	l/defl	L/d	PLATES	GRIP
TCLL	30.0	Plate Grip DOL	1.33	TC	0.49	Vert(LL)	0.03	9	>999	360	MT20	244/190
TCDL	15.0	Lumber DOL	1.33	BC	0.47	Vert(CT)	-0.03	8-9	>999	180		
BCLL	0.0	Rep Stress Incr	NO	WB	0.29	Horz(CT)	-0.01	8	n/a	n/a		
BCDL	10.0	Code FBC2020/TPI2014		Matrix-MP							Weight: 43 lb	FT = 0%

LUMBER-
TOP CHORD 2x4 SP No.1
BOT CHORD 2x4 SP No.2
WEBS 2x4 SP No.3
OTHERS 2x4 SP No.3

BRACING-
TOP CHORD Structural wood sheathing directly applied or 5-6-9 oc purlins, except end verticals.
BOT CHORD Rigid ceiling directly applied or 5-8-2 oc bracing.

MiTek recommends that Stabilizers and required cross bracing be installed during truss erection, in accordance with Stabilizer Installation guide.

REACTIONS. (lb/size) 3=827/0-10-15 (min. 0-1-8), 8=292/Mechanical, 10=0/Mechanical
Max Horz 3=627(LC 1), 10=987(LC 4)
Max Uplift3=-1408(LC 4), 8=-555(LC 4)
Max Grav 3=1056(LC 21), 8=397(LC 21)

FORCES. (lb) - Max. Comp./Max. Ten. - All forces 250 (lb) or less except when shown.
TOP CHORD 1-14=-951/644, 2-14=-937/709, 2-3=-945/723, 3-4=-613/734, 5-8=-147/259
BOT CHORD 3-16=-909/648, 9-16=-909/648, 9-17=-909/648, 8-17=-909/648
WEBS 4-8=-681/955, 1-10=-627/987

NOTES- (10-11)
1) Unbalanced roof live loads have been considered for this design.
2) Wind: ASCE 7-16; Vult=175mph (3-second gust) Vasd=136mph; HVHZ; TCDL=5.0psf; BCDL=5.0psf; h=28ft; Cat. II; Exp C; Encl., GCpi=0.18; C-C Corner(3) -4-4-5 to 0-0-0, Exterior(2R) 0-0-0 to 6-11-6; Lumber DOL=1.60 plate grip DOL=1.60
3) Building Designer / Project engineer responsible for verifying applied roof live load shown covers rain loading requirements specific to the use of this truss component.
4) This truss has been designed for a 10.0 psf bottom chord live load nonconcurrent with any other live loads.
5) Refer to girder(s) for truss to truss connections.
6) Refer to girder(s) for truss to truss connections.
7) Provide mechanical connection (by others) of truss to bearing plate capable of withstanding 1408 lb uplift at joint 3 and 555 lb uplift at joint 8.
8) Hanger(s) or other connection device(s) shall be provided sufficient to support concentrated load(s) 379 lb down and 300 lb up at -1-3-15, 379 lb down and 300 lb up at -1-3-15, and 333 lb down and 224 lb up at 4-4-0, and 333 lb down and 224 lb up at 4-4-0 on top chord, and 125 lb down and 136 lb up at 1-6-1, 125 lb down and 136 lb up at 1-6-1, and 11 lb down and 4 lb up at 4-4-0, and 11 lb down and 4 lb up at 4-4-0 on bottom chord. The design/selection of such connection device(s) is the responsibility of others.
9) In the LOAD CASE(S) section, loads applied to the face of the truss are noted as front (F) or back (B).
10) All truss to truss connection by TCI are on the Truss Placement plan.
11) ARMANDO R. PEREZ PE. # 28026 Ph: (305) 882-8826

LOAD CASE(S) Standard
1) Dead + Roof Live (balanced): Lumber Increase=1.33, Plate Increase=1.33
Uniform Loads (plf)
Vert: 1-5=-90, 5-6=-30, 7-11=-20
Concentrated Loads (lb)
Vert: 14=-102(F=-51, B=-51) 16=116(F=58, B=58) 17=7(F=4, B=4)

Job	Truss	Truss Type	Qty	Ply	12715 ROLLING ROAD DR, PINECREST, FL.
12715	CJ5A	DIAGONAL HIP GIRDER	4	1	Job Reference (optional)

Trusscorp Int., 9590 NW 89 AVE, Medley, FL

8.820 s Dec 4 2024 MiTek Industries, Inc. Thu Jun 5 12:41:45 2025 Page 1
ID:_GLN6EJBZ1GCD23RDL_tAxzKvJz-pVJhbx94gZ_8oOiCuuLfd9_oCPZ6v0j359e8H1z9LOq

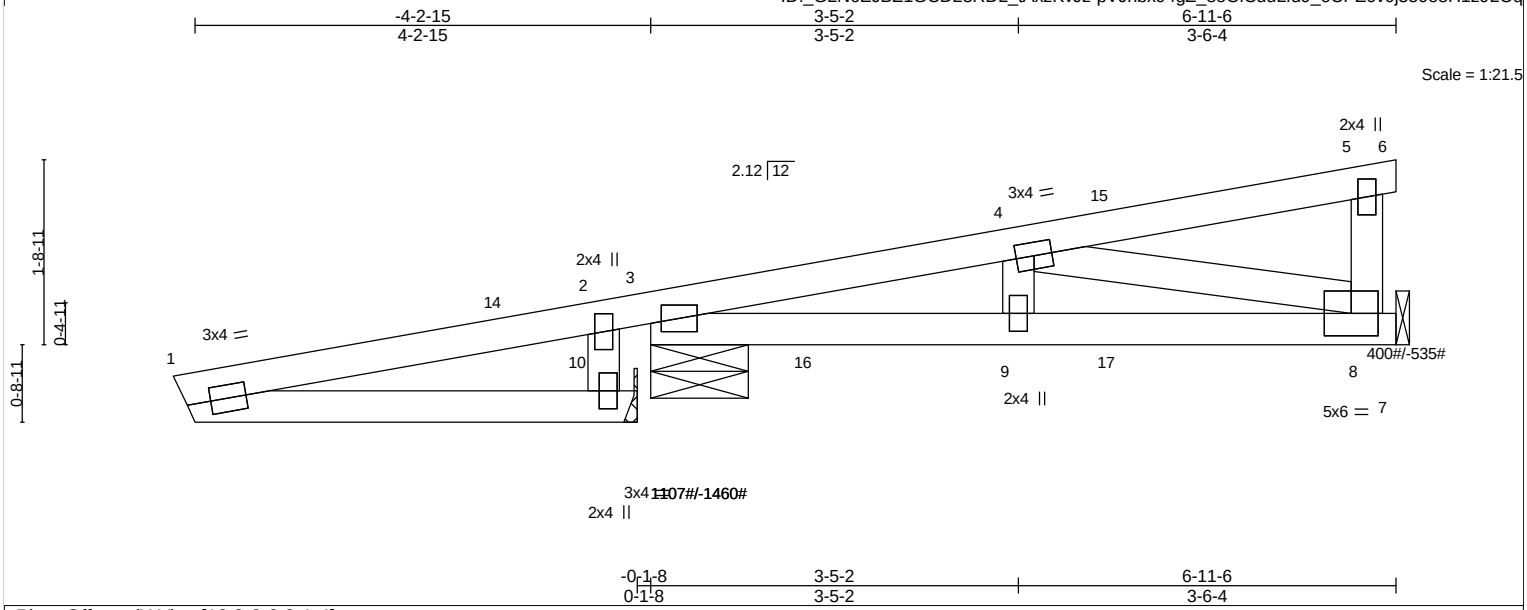

Plate Offsets (X,Y)-- [10:0-2-0,0-1-4]

LOADING (psf)		SPACING-	2-0-0	CSI.		DEFL.	in	(loc)	l/defl	L/d	PLATES	GRIP
TCLL	30.0	Plate Grip DOL	1.33	TC	0.53	Vert(LL)	0.04	9	>999	360	MT20	244/190
TCDL	15.0	Lumber DOL	1.33	BC	0.50	Vert(CT)	0.04	9	>999	180		
BCLL	0.0	Rep Stress Incr	NO	WB	0.35	Horz(CT)	-0.01	8	n/a	n/a		
BCDL	10.0	Code FBC2020/TPI2014		Matrix-MP							Weight: 42 lb	FT = 0%

LUMBER-
TOP CHORD 2x4 SP No.1
BOT CHORD 2x4 SP No.2
WEBS 2x4 SP No.3
OTHERS 2x4 SP No.3

BRACING-
TOP CHORD Structural wood sheathing directly applied or 4-11-10 oc purlins, except end verticals.
BOT CHORD Rigid ceiling directly applied or 5-3-7 oc bracing.

MiTek recommends that Stabilizers and required cross bracing be installed during truss erection, in accordance with Stabilizer Installation guide.

REACTIONS. (lb/size) 8=284/Mechanical, 3=811/0-10-15 (min. 0-1-8), 10=-0/Mechanical
Max Horz 3=-829(LC 4), 10=1177(LC 4)
Max Uplift 8=-535(LC 4), 3=-1460(LC 4)
Max Grav 8=400(LC 21), 3=1107(LC 21)

FORCES. (lb) - Max. Comp./Max. Ten. - All forces 250 (lb) or less except when shown.
TOP CHORD 1-14=-1151/775, 2-14=-1140/823, 2-3=-1148/835, 3-4=-786/921, 5-8=-154/266
BOT CHORD 3-16=-1050/812, 9-16=-1050/812, 9-17=-1050/812, 8-17=-1050/812
WEBS 4-8=-836/1082, 1-10=-764/1178

NOTES- (10-11)
1) Unbalanced roof live loads have been considered for this design.
2) Wind: ASCE 7-16; Vult=175mph (3-second gust) Vasd=136mph; HVHZ; TCDL=5.0psf; BCDL=5.0psf; h=28ft; Cat. II; Exp C; Encl., GCpi=0.18; C-C Corner(3) -4-4-2 to 0-0-0, Exterior(2R) 0-0-0 to 6-11-6; Lumber DOL=1.60 plate grip DOL=1.60
3) Building Designer / Project engineer responsible for verifying applied roof live load shown covers rain loading requirements specific to the use of this truss component.
4) This truss has been designed for a 10.0 psf bottom chord live load nonconcurrent with any other live loads.
5) Refer to girder(s) for truss to truss connections.
6) Refer to girder(s) for truss to truss connections.
7) Provide mechanical connection (by others) of truss to bearing plate capable of withstanding 535 lb uplift at joint 8 and 1460 lb uplift at joint 3.
8) Hanger(s) or other connection device(s) shall be provided sufficient to support concentrated load(s) 375 lb down and 295 lb up at -1-3-15, 375 lb down and 295 lb up at -1-3-15, and 327 lb down and 210 lb up at 4-4-0, and 327 lb down and 210 lb up at 4-4-0 on top chord, and 152 lb down and 155 lb up at 1-6-1, 152 lb down and 155 lb up at 1-6-1, and 13 lb down and 4 lb up at 4-4-0, and 13 lb down and 4 lb up at 4-4-0 on bottom chord. The design/selection of such connection device(s) is the responsibility of others.
9) In the LOAD CASE(S) section, loads applied to the face of the truss are noted as front (F) or back (B).
10) All truss to truss connection by TCI are on the Truss Placement plan.
11) ARMANDO R. PEREZ PE. # 28026 Ph: (305) 882-8826

LOAD CASE(S) Standard
1) Dead + Roof Live (balanced): Lumber Increase=1.33, Plate Increase=1.33
Uniform Loads (plf)
Vert: 1-5=-90, 5-6=-30, 7-11=-20
Concentrated Loads (lb)
Vert: 14=-92(F=-46, B=-46) 16=128(F=64, B=64) 17=8(F=4, B=4)

Job	Truss	Truss Type	Qty	Ply	12715 ROLLING ROAD DR, PINECREST, FL.
12715	CJ5AT	DIAGONAL HIP GIRDER	5	1	Job Reference (optional)

Trusscorp Int., 9590 NW 89 AVE, Medley, FL

8.820 s Dec 4 2024 MiTek Industries, Inc. Thu Jun 5 12:41:47 2025 Page 1
ID:_GLN6EJBZ1GCD23RDL_tAxzKvJz-luRS0dALCAEs1isa0JN7ia47EDCHNvAMYT7FLvz9LOo

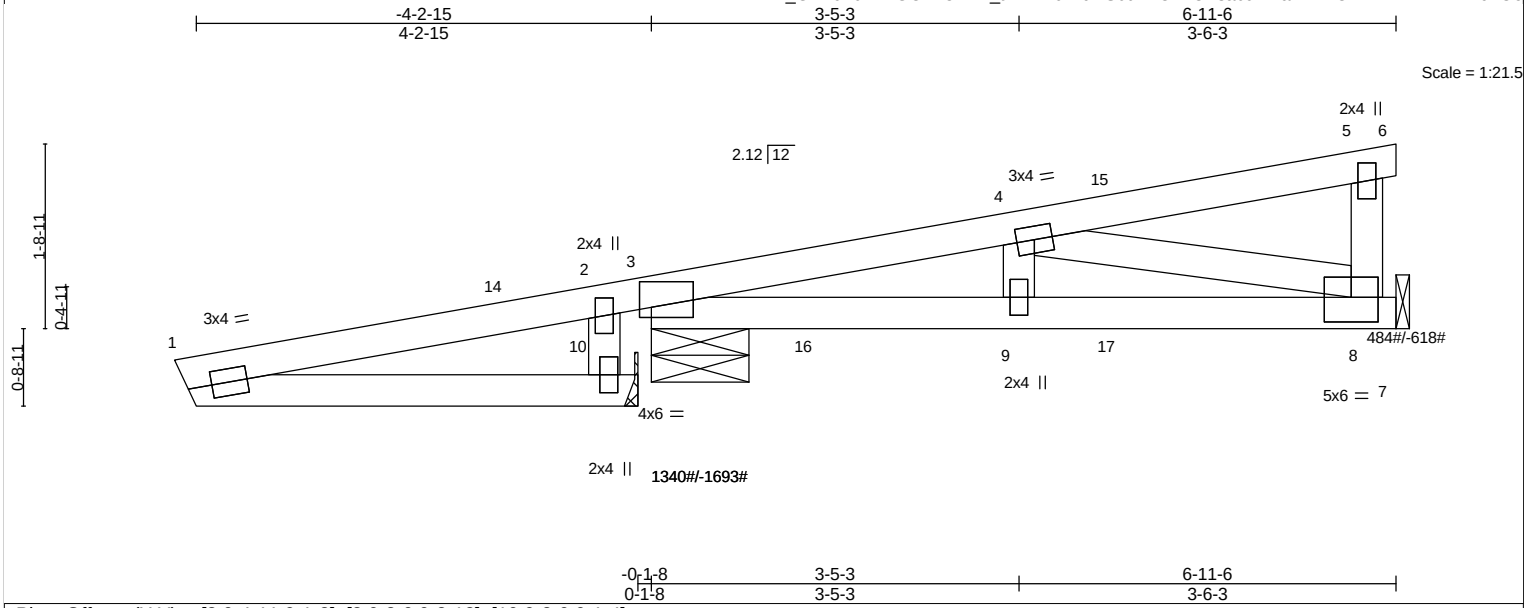

Plate Offsets (X,Y)-- [3:0-4-11,0-1-2], [8:0-3-0,0-2-12], [10:0-2-0,0-1-4]

LOADING (psf)		**SPACING-**	2-0-0	**CSI.**		**DEFL.**	in	(loc)	l/defl	L/d	**PLATES**	**GRIP**
TCLL	30.0	Plate Grip DOL	1.33	TC	0.62	Vert(LL)	0.04	8-9	>999	360	MT20	244/190
TCDL	15.0	Lumber DOL	1.33	BC	0.58	Vert(CT)	0.04	9	>999	180		
BCLL	0.0	Rep Stress Incr	NO	WB	0.42	Horz(CT)	-0.01	8	n/a	n/a		
BCDL	10.0	Code FBC2020/TPI2014		Matrix-MP							Weight: 42 lb	FT = 0%

LUMBER-
TOP CHORD 2x4 SP No.1
BOT CHORD 2x4 SP No.2
WEBS 2x4 SP No.3
OTHERS 2x4 SP No.3

BRACING-
TOP CHORD Structural wood sheathing directly applied or 4-4-0 oc purlins, except end verticals.
BOT CHORD Rigid ceiling directly applied or 4-10-7 oc bracing.

MiTek recommends that Stabilizers and required cross bracing be installed during truss erection, in accordance with Stabilizer Installation guide.

REACTIONS. (lb/size) 8=284/Mechanical, 3=811/0-10-15 (min. 0-1-9), 10=-0/Mechanical
Max Horz 3=-997(LC 4), 10=1401(LC 4)
Max Uplift8=-618(LC 4), 3=-1693(LC 4)
Max Grav 8=484(LC 21), 3=1340(LC 21)

FORCES. (lb) - Max. Comp./Max. Ten. - All forces 250 (lb) or less except when shown.
TOP CHORD 1-14=-1369/923, 2-14=-1359/945, 2-3=-1368/954, 3-4=-898/1030, 5-8=-197/311
BOT CHORD 3-16=-1179/944, 9-16=-1179/944, 9-17=-1179/944, 8-17=-1179/944
WEBS 4-8=-972/1215, 1-10=-935/1402

NOTES- (10-11)
1) Unbalanced roof live loads have been considered for this design.
2) Wind: ASCE 7-16; Vult=175mph (3-second gust) Vasd=136mph; HVHZ; TCDL=5.0psf; BCDL=5.0psf; h=28ft; Cat. II; Exp C; Part. Encl., GCpi=0.55; C-C Corner(3) -4-4-2 to 0-0-0, Exterior(2R) 0-0-0 to 6-11-6; Lumber DOL=1.60 plate grip DOL=1.60
3) Building Designer / Project engineer responsible for verifying applied roof live load shown covers rain loading requirements specific to the use of this truss component.
4) This truss has been designed for a 10.0 psf bottom chord live load nonconcurrent with any other live loads.
5) Refer to girder(s) for truss to truss connections.
6) Refer to girder(s) for truss to truss connections.
7) Provide mechanical connection (by others) of truss to bearing plate capable of withstanding 618 lb uplift at joint 8 and 1693 lb uplift at joint 3.
8) Hanger(s) or other connection device(s) shall be provided sufficient to support concentrated load(s) 416 lb down and 336 lb up at -1-3-15, 416 lb down and 336 lb up at -1-3-15, and 387 lb down and 271 lb up at 4-4-0, and 387 lb down and 271 lb up at 4-4-0 on top chord, and 152 lb down and 155 lb up at 1-6-1, 152 lb down and 155 lb up at 1-6-1, and 14 lb down and 4 lb up at 4-4-0, and 14 lb down and 4 lb up at 4-4-0 on bottom chord. The design/selection of such connection device(s) is the responsibility of others.
9) In the LOAD CASE(S) section, loads applied to the face of the truss are noted as front (F) or back (B).
10) All truss to truss connection by TCI are on the Truss Placement plan.
11) ARMANDO R. PEREZ PE. # 28026 Ph: (305) 882-8826

LOAD CASE(S) Standard
1) Dead + Roof Live (balanced): Lumber Increase=1.33, Plate Increase=1.33
Uniform Loads (plf)
Vert: 1-5=-90, 5-6=-30, 7-11=-20
Concentrated Loads (lb)
Vert: 14=-92(F=-46, B=-46) 16=128(F=64, B=64) 17=8(F=4, B=4)

Job	Truss	Truss Type	Qty	Ply	12715 ROLLING ROAD DR, PINECREST, FL.
12715	CJ5C	DIAGONAL HIP GIRDER	2	1	Job Reference (optional)

Trusscorp Int., 9590 NW 89 AVE, Medley, FL

8.820 s Dec 4 2024 MiTek Industries, Inc. Thu Jun 5 12:41:49 2025 Page 1
ID:_GLN6EJBZ1GCD23RDL_tAxzKvJz-hGZCRJCbkoVaG?0z7kPbn?9RP0z4rrse0ncMQoz9LOm

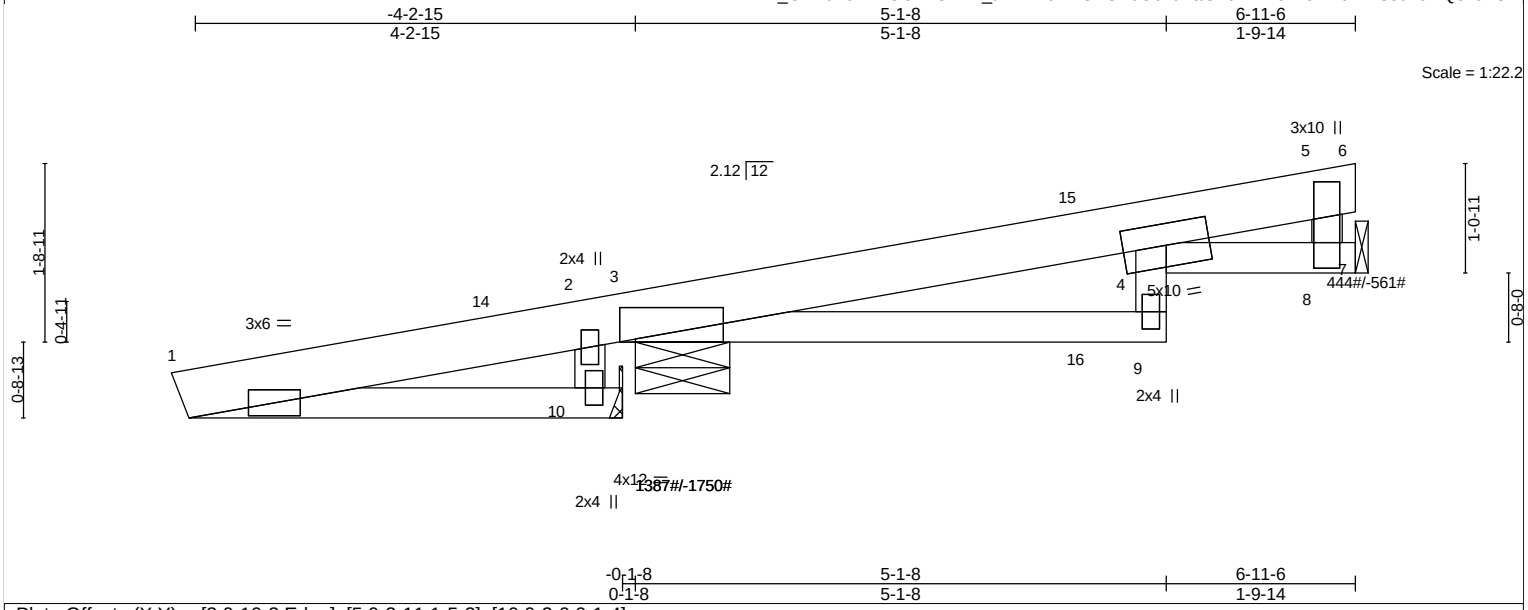

Plate Offsets (X,Y)-- [3:0-10-3,Edge], [5:0-2-11,1-5-2], [10:0-2-0,0-1-4]

LOADING (psf)		SPACING-	2-0-0	CSI.		DEFL.	in	(loc)	l/defl	L/d	PLATES	GRIP
TCLL	30.0	Plate Grip DOL	1.33	TC	0.77	Vert(LL)	0.11	9-13	>751	360	MT20	244/190
TCDL	15.0	Lumber DOL	1.33	BC	0.30	Vert(CT)	-0.11	9-13	>753	180		
BCLL	0.0	Rep Stress Incr	NO	WB	0.28	Horz(CT)	-0.04	8	n/a	n/a		
BCDL	10.0	Code FBC2020/TPI2014		Matrix-MP							Weight: 46 lb	FT = 0%

LUMBER-
TOP CHORD 2x6 SP No.2
BOT CHORD 2x4 SP No.2 *Except*
B2: 2x4 SP No.3
WEBS 2x4 SP No.3

BRACING-
TOP CHORD Structural wood sheathing directly applied or 5-2-6 oc purlins, except end verticals.
BOT CHORD Rigid ceiling directly applied or 10-0-0 oc bracing, Except: 6-0-0 oc bracing: 4-8.

MiTek recommends that Stabilizers and required cross bracing be installed during truss erection, in accordance with Stabilizer Installation guide.

REACTIONS. (lb/size) 8=270/Mechanical, 3=824/0-10-15 (min. 0-1-10), 10=-0/Mechanical
Max Horz 3=694(LC 13), 10=931(LC 20)
Max Uplift8=-561(LC 4), 3=-1750(LC 4)
Max Grav 8=444(LC 21), 3=1387(LC 21)

FORCES. (lb) - Max. Comp./Max. Ten. - All forces 250 (lb) or less except when shown.
TOP CHORD 1-14=-913/705, 2-14=-887/753, 2-3=-890/762, 5-8=-421/572
WEBS 1-10=-694/931

NOTES- (10-11)
1) Unbalanced roof live loads have been considered for this design.
2) Wind: ASCE 7-16; Vult=175mph (3-second gust) Vasd=136mph; HVHZ; TCDL=5.0psf; BCDL=5.0psf; h=28ft; Cat. II; Exp C; Part. Encl., GCpi=0.55; C-C Corner(3) -4-4-3 to 0-0-0, Exterior(2R) 0-0-0 to 6-11-6; Lumber DOL=1.60 plate grip DOL=1.60
3) Building Designer / Project engineer responsible for verifying applied roof live load shown covers rain loading requirements specific to the use of this truss component.
4) This truss has been designed for a 10.0 psf bottom chord live load nonconcurrent with any other live loads.
5) Refer to girder(s) for truss to truss connections.
6) Refer to girder(s) for truss to truss connections.
7) Provide mechanical connection (by others) of truss to bearing plate capable of withstanding 561 lb uplift at joint 8 and 1750 lb uplift at joint 3.
8) Hanger(s) or other connection device(s) shall be provided sufficient to support concentrated load(s) 416 lb down and 336 lb up at -1-3-15, 416 lb down and 336 lb up at -1-3-15, and 384 lb down and 265 lb up at 4-4-0, and 387 lb down and 271 lb up at 4-4-0 on top chord, and 152 lb down and 155 lb up at 1-6-1, 152 lb down and 155 lb up at 1-6-1, and 20 lb down and 6 lb up at 4-4-0, and 14 lb down and 4 lb up at 4-4-0 on bottom chord. The design/selection of such connection device(s) is the responsibility of others.
9) In the LOAD CASE(S) section, loads applied to the face of the truss are noted as front (F) or back (B).
10) All truss to truss connection by TCI are on the Truss Placement plan.
11) ARMANDO R. PEREZ PE. # 28026 Ph: (305) 882-8826

LOAD CASE(S) Standard
1) Dead + Roof Live (balanced): Lumber Increase=1.33, Plate Increase=1.33
Uniform Loads (plf)
Vert: 1-4=-90, 4-5=-90, 5-6=-30, 9-11=-20, 4-7=-20
Concentrated Loads (lb)
Vert: 13=128(F=64, B=64) 14=-92(F=-46, B=-46) 16=10(F=4, B=6)

Job	Truss	Truss Type	Qty	Ply	12715 ROLLING ROAD DR, PINECREST, FL.
12715	CJ5T	DIAGONAL HIP GIRDER	4	1	Job Reference (optional)

Trusscorp Int., 9590 NW 89 AVE, Medley, FL — 8.820 s Dec 4 2024 MiTek Industries, Inc. Thu Jun 5 12:41:51 2025 Page 1

ID:_GLN6EJBZ1GCD23RDL_tAxzKvJz-efgzs?DrGPlHWJALF9S3sQErWqcJJkqxT55SUgz9LOk

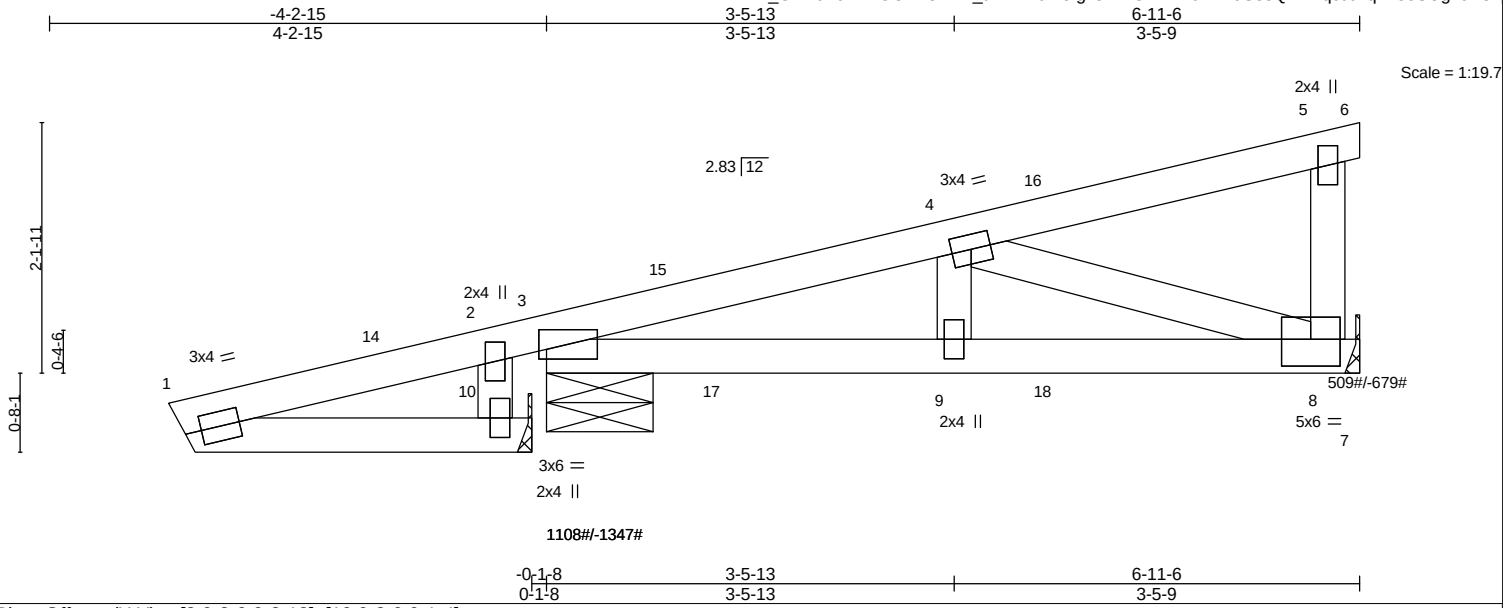

Plate Offsets (X,Y)-- [8:0-3-0,0-2-12], [10:0-2-0,0-1-4]

LOADING (psf)		SPACING-	2-0-0	CSI.		DEFL.	in	(loc)	l/defl	L/d	PLATES	GRIP
TCLL	30.0	Plate Grip DOL	1.33	TC	0.47	Vert(LL)	0.03	9	>999	360	MT20	244/190
TCDL	15.0	Lumber DOL	1.33	BC	0.51	Vert(CT)	-0.03	8-9	>999	180		
BCLL	0.0	Rep Stress Incr	NO	WB	0.37	Horz(CT)	-0.01	8	n/a	n/a		
BCDL	10.0	Code FBC2020/TPI2014		Matrix-MP							Weight: 39 lb	FT = 0%

LUMBER-
TOP CHORD 2x4 SP No.1
BOT CHORD 2x4 SP No.2
WEBS 2x4 SP No.3
OTHERS 2x4 SP No.3

BRACING-
TOP CHORD Structural wood sheathing directly applied or 6-0-0 oc purlins, except end verticals.
BOT CHORD Rigid ceiling directly applied or 5-1-11 oc bracing.

MiTek recommends that Stabilizers and required cross bracing be installed during truss erection, in accordance with Stabilizer Installation guide.

REACTIONS. (lb/size) 3=695/0-10-15 (min. 0-1-8), 8=313/Mechanical, 10=0/Mechanical
Max Horz 3=480(LC 1), 10=729(LC 4)
Max Uplift3=-1347(LC 4), 8=-679(LC 4)
Max Grav 3=1108(LC 21), 8=509(LC 21)

FORCES. (lb) - Max. Comp./Max. Ten. - All forces 250 (lb) or less except when shown.
TOP CHORD 1-14=-699/512, 2-14=-689/540, 2-3=-697/555, 3-15=-817/983, 4-15=-805/989, 5-8=-184/294
BOT CHORD 3-17=-1196/882, 9-17=-1196/882, 9-18=-1196/882, 8-18=-1196/882
WEBS 4-8=-927/1257, 1-10=-526/730

NOTES- (9-10)
1) Unbalanced roof live loads have been considered for this design.
2) Wind: ASCE 7-16; Vult=175mph (3-second gust) Vasd=136mph; HVHZ; TCDL=5.0psf; BCDL=5.0psf; h=28ft; Cat. II; Exp C; Part. Encl., GCpi=0.55; C-C Corner(3) -3-1-6 to 1-1-8, Exterior(2R) 1-1-8 to 6-11-6; Lumber DOL=1.60 plate grip DOL=1.60
3) Building Designer / Project engineer responsible for verifying applied roof live load shown covers rain loading requirements specific to the use of this truss component.
4) This truss has been designed for a 10.0 psf bottom chord live load nonconcurrent with any other live loads.
5) Refer to girder(s) for truss to truss connections.
6) Provide mechanical connection (by others) of truss to bearing plate capable of withstanding 1347 lb uplift at joint 3 and 679 lb uplift at joint 8.
7) Hanger(s) or other connection device(s) shall be provided sufficient to support concentrated load(s) 418 lb down and 341 lb up at -1-3-15, 418 lb down and 341 lb up at -1-3-15, and 376 lb down and 267 lb up at 4-4-0, and 374 lb down and 265 lb up at 4-4-0 on top chord, and 125 lb down and 136 lb up at 1-6-1, 125 lb down and 136 lb up at 1-6-1, and 11 lb down and 3 lb up at 4-4-0, and 11 lb down and 4 lb up at 4-4-0 on bottom chord. The design/selection of such connection device(s) is the responsibility of others.
8) In the LOAD CASE(S) section, loads applied to the face of the truss are noted as front (F) or back (B).
9) All truss to truss connection by TCI are on the Truss Placement plan.
10) ARMANDO R. PEREZ PE. # 28026 Ph: (305) 882-8826

LOAD CASE(S) Standard
1) Dead + Roof Live (balanced): Lumber Increase=1.33, Plate Increase=1.33
Uniform Loads (plf)
Vert: 1-5=-90, 5-6=-30, 7-11=-20
Concentrated Loads (lb)
Vert: 14=-102(F=-51, B=-51) 17=116(F=58, B=58) 18=7(F=4, B=3)

Job	Truss	Truss Type	Qty	Ply	12715 ROLLING ROAD DR, PINECREST, FL.
12715	CJ7	Diagonal Hip Girder	1	1	Job Reference (optional)

Trusscorp Int., 9590 NW 89 AVE, Medley, FL — 8.820 s Dec 4 2024 MiTek Industries, Inc. Thu Jun 5 12:41:54 2025 Page 1

ID:_GLN6EJBZ1GCD23RDL_tAxzKvJz-2EM5U0GkYK7sNmuwwH?mU3sJS1aSW3kO93K75?z9LOh

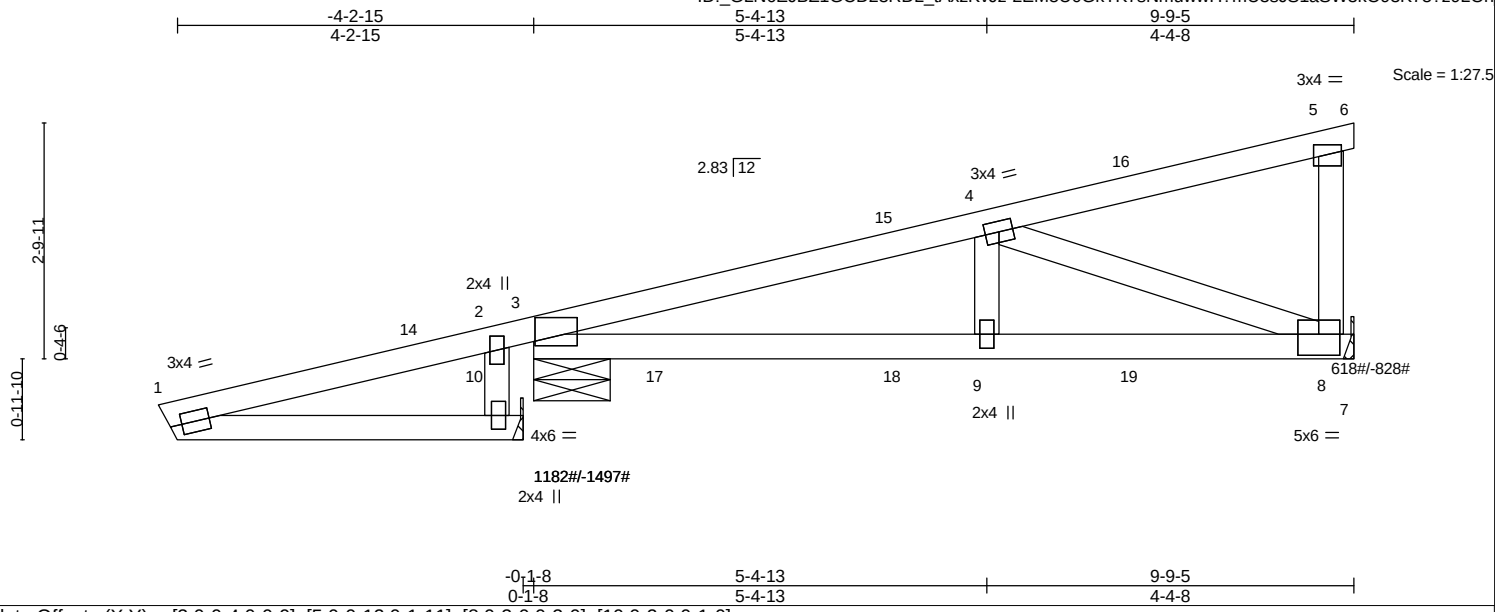

Plate Offsets (X,Y)-- [3:0-0-4,0-0-9], [5:0-0-12,0-1-11], [8:0-3-0,0-3-0], [10:0-2-0,0-1-0]

LOADING (psf)		**SPACING-**	2-0-0	**CSI.**		**DEFL.**	in	(loc)	l/defl	L/d	**PLATES**	**GRIP**
TCLL	30.0	Plate Grip DOL	1.33	TC	0.68	Vert(LL)	0.07	8-9	>999	360	MT20	244/190
TCDL	15.0	Lumber DOL	1.33	BC	0.67	Vert(CT)	-0.06	8-9	>999	180		
BCLL	0.0	Rep Stress Incr	NO	WB	0.43	Horz(CT)	-0.02	8	n/a	n/a		
BCDL	10.0	Code FBC2020/TPI2014		Matrix-MSH							Weight: 55 lb	FT = 0%

LUMBER-
TOP CHORD 2x4 SP No.1
BOT CHORD 2x4 SP No.2
WEBS 2x4 SP No.3
OTHERS 2x4 SP No.3

BRACING-
TOP CHORD Structural wood sheathing directly applied or 5-11-4 oc purlins, except end verticals.
BOT CHORD Rigid ceiling directly applied or 4-9-9 oc bracing.

MiTek recommends that Stabilizers and required cross bracing be installed during truss erection, in accordance with Stabilizer Installation guide.

REACTIONS. (lb/size) 3=988/0-10-15 (min. 0-1-8), 8=580/Mechanical, 10=0/Mechanical
Max Horz 3=644(LC 13), 10=850(LC 4)
Max Uplift3=-1497(LC 4), 8=-828(LC 4)
Max Grav 3=1182(LC 21), 8=618(LC 21)

FORCES. (lb) - Max. Comp./Max. Ten. - All forces 250 (lb) or less except when shown.
TOP CHORD 1-14=-819/662, 2-14=-805/723, 2-3=-812/738, 3-15=-1003/1202, 4-15=-972/1208, 5-8=-213/327
BOT CHORD 3-17=-1427/1040, 17-18=-1427/1040, 9-18=-1427/1040, 9-19=-1427/1040, 8-19=-1427/1040
WEBS 4-8=-1049/1441, 1-10=-645/850

NOTES- (9-10)
1) Unbalanced roof live loads have been considered for this design.
2) Wind: ASCE 7-16; Vult=175mph (3-second gust) Vasd=136mph; HVHZ; TCDL=5.0psf; BCDL=5.0psf; h=28ft; Cat. II; Exp C; Encl., GCpi=0.18; C-C Corner(3) -4-4-5 to 0-0-0, Exterior(2R) 0-0-0 to 9-9-5; Lumber DOL=1.60 plate grip DOL=1.60
3) Building Designer / Project engineer responsible for verifying applied roof live load shown covers rain loading requirements specific to the use of this truss component.
4) This truss has been designed for a 10.0 psf bottom chord live load nonconcurrent with any other live loads.
5) Refer to girder(s) for truss to truss connections.
6) Provide mechanical connection (by others) of truss to bearing plate capable of withstanding 1497 lb uplift at joint 3 and 828 lb uplift at joint 8.
7) Hanger(s) or other connection device(s) shall be provided sufficient to support concentrated load(s) 356 lb down and 287 lb up at -1-3-15, 356 lb down and 287 lb up at -1-3-15, 306 lb down and 211 lb up at 4-4-0, 306 lb down and 211 lb up at 4-4-0, and 385 lb down and 374 lb up at 7-1-15, and 385 lb down and 374 lb up at 7-1-15 on top chord, and 125 lb down and 136 lb up at 1-6-1, 125 lb down and 136 lb up at 1-6-1, 11 lb down and 4 lb up at 4-4-0, 11 lb down and 4 lb up at 4-4-0, and 37 lb down and 23 lb up at 7-1-15, and 37 lb down and 23 lb up at 7-1-15 on bottom chord. The design/selection of such connection device(s) is the responsibility of others.
8) In the LOAD CASE(S) section, loads applied to the face of the truss are noted as front (F) or back (B).
9) All truss to truss connection by TCI are on the Truss Placement plan.
10) ARMANDO R. PEREZ PE. # 28026 Ph: (305) 882-8826

LOAD CASE(S) Standard
1) Dead + Roof Live (balanced): Lumber Increase=1.33, Plate Increase=1.33
Uniform Loads (plf)
Vert: 1-5=-90, 5-6=-30, 7-11=-20
Concentrated Loads (lb)
Vert: 14=-102(F=-51, B=-51) 16=-95(F=-48, B=-48) 17=116(F=58, B=58) 18=7(F=4, B=4) 19=-43(F=-21, B=-21)

Job	Truss	Truss Type	Qty	Ply	12715 ROLLING ROAD DR, PINECREST, FL.
12715	CJ7B	Diagonal Hip Girder	2	2	Job Reference (optional)

Trusscorp Int., 9590 NW 89 AVE, Medley, FL

8.820 s Dec 4 2024 MiTek Industries, Inc. Thu Jun 5 12:41:56 2025 Page 1
ID:_GLN6EJBZ1GCD23RDL_tAxzKvJz-_cUsviH_4xNac42J1i1EZUyf_rLm_1NgdNpDAuz9LOf

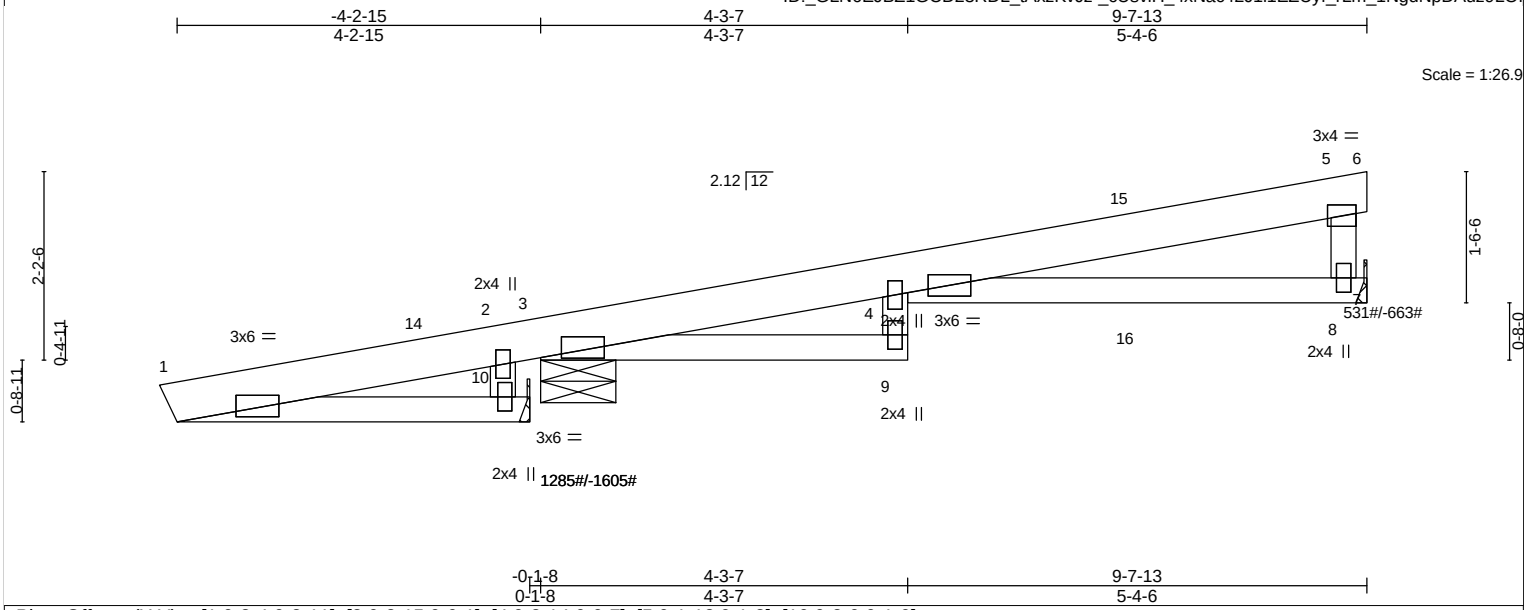

Plate Offsets (X,Y)-- [1:0-8-4,0-3-11], [3:0-2-15,0-0-1], [4:0-2-14,0-0-7], [5:0-1-12,0-1-8], [10:0-2-0,0-1-0]

LOADING (psf)		**SPACING-**	2-0-0	**CSI.**		**DEFL.**	in	(loc)	l/defl	L/d	**PLATES**	**GRIP**
TCLL	30.0	Plate Grip DOL	1.33	TC	0.68	Vert(LL)	0.20	4-8	>577	360	MT20	244/190
TCDL	15.0	Lumber DOL	1.33	BC	0.36	Vert(CT)	-0.18	4-8	>611	180		
BCLL	0.0	Rep Stress Incr	NO	WB	0.16	Horz(CT)	-0.05	8	n/a	n/a		
BCDL	10.0	Code FBC2020/TPI2014		Matrix-MSH							Weight: 113 lb	FT = 0%

LUMBER-
TOP CHORD 2x6 SP No.2
BOT CHORD 2x4 SP No.2 *Except*
B2: 2x4 SP No.3
WEBS 2x4 SP No.3
OTHERS 2x4 SP No.3

BRACING-
TOP CHORD Structural wood sheathing directly applied or 6-0-0 oc purlins, except end verticals.
BOT CHORD Rigid ceiling directly applied or 6-0-0 oc bracing.

REACTIONS. (lb/size) 8=508/Mechanical, 3=1005/0-10-9 (min. 0-1-8), 10=0/Mechanical
Max Horz 3=-696(LC 20), 10=1089(LC 20)
Max Uplift8=-663(LC 4), 3=-1605(LC 4)
Max Grav 8=531(LC 21), 3=1285(LC 21)

FORCES. (lb) - Max. Comp./Max. Ten. - All forces 250 (lb) or less except when shown.
TOP CHORD 1-14=-1068/645, 2-14=-939/559, 2-3=-943/563, 3-4=-259/108, 4-15=-407/400, 5-15=-355/393, 5-8=-409/599
BOT CHORD 4-16=-502/418, 8-16=-503/416
WEBS 1-10=-649/1089

NOTES- (11-12)
1) Special connection required to distribute bottom chord loads equally between all plies.
2) 2-ply truss to be connected together with 16d (0.131"x 3.5") nails as follows:
Top chords connected as follows: 2x6 - 3 rows staggered at 0-2-0 oc clinched, 2x4 - 1 row at 0-9-0 oc clinched.
Bottom chords connected as follows: 2x4 - 2 rows staggered at 0-2-0 oc clinched, Except member 4-7 2x4 - 2 rows staggered at 0-2-0 oc clinched.
Webs connected as follows: 2x4 - 1 row at 0-9-0 oc clinched.
3) All loads are considered equally applied to all plies, except if noted as front (F) or back (B) face in the LOAD CASE(S) section. Ply to ply connections have been provided to distribute only loads noted as (F) or (B), unless otherwise indicated.
4) Unbalanced roof live loads have been considered for this design.
5) Wind: ASCE 7-16; Vult=175mph (3-second gust) Vasd=136mph; HVHZ; TCDL=5.0psf; BCDL=5.0psf; h=28ft; Cat. II; Exp C; Encl., GCpi=0.18; C-C Corner(3) -4-3-7 to 0-0-0, Exterior(2R) 0-0-0 to 9-7-13; Lumber DOL=1.60 plate grip DOL=1.60
6) Building Designer / Project engineer responsible for verifying applied roof live load shown covers rain loading requirements specific to the use of this truss component.
7) This truss has been designed for a 10.0 psf bottom chord live load nonconcurrent with any other live loads.
8) Refer to girder(s) for truss to truss connections.
9) Provide mechanical connection (by others) of truss to bearing plate capable of withstanding 663 lb uplift at joint 8 and 1605 lb uplift at joint 3.
10) Hanger(s) or other connection device(s) shall be provided sufficient to support concentrated load(s) 353 lb down and 283 lb up at -1-3-14, 353 lb down and 283 lb up at -1-3-14, 300 lb down and 198 lb up at 4-4-0, 300 lb down and 198 lb up at 4-4-0, and 391 lb down and 357 lb up at 6-10-15, and 406 lb down and 372 lb up at 7-1-15 on top chord, and 152 lb down and 155 lb up at 1-6-1, 152 lb down and 155 lb up at 1-6-1, 13 lb down and 4 lb up at 4-1-11, 13 lb down and 4 lb up at 4-1-11, and 10 lb down at 6-10-15, and 5 lb down at 7-1-15 on bottom chord. The design/selection of such connection device(s) is the responsibility of others.
11) All truss to truss connection by TCI are on the Truss Placement plan.
12) ARMANDO R. PEREZ PE. # 28026 Ph: (305) 882-8826

LOAD CASE(S) Standard
1) Dead + Roof Live (balanced): Lumber Increase=1.33, Plate Increase=1.33
Uniform Loads (plf)
Vert: 1-4=-90, 4-5=-90, 5-6=-30, 9-11=-20, 4-7=-20

Continued on page 2

LOAD CASE(S) Standard

Concentrated Loads (lb)

Vert: 9=8(F=4, B=4) 13=128(F=64, B=64) 14=-92(F=-46, B=-46) 15=-127(F=-55, B=-71)

Job	Truss	Truss Type	Qty	Ply	12715 ROLLING ROAD DR, PINECREST, FL.
12715	CJ7T	DIAGONAL HIP GIRDER	1	1	Job Reference (optional)

Trusscorp Int., 9590 NW 89 AVE, Medley, FL

8.820 s Dec 4 2024 MiTek Industries, Inc. Thu Jun 5 12:41:58 2025 Page 1
ID:_GLN6EJBZ1GCD23RDL_tAxzKvJz-w?bcKOJEcZdIrOCh974ifv1zGfweSsbz4hIKEnz9LOd

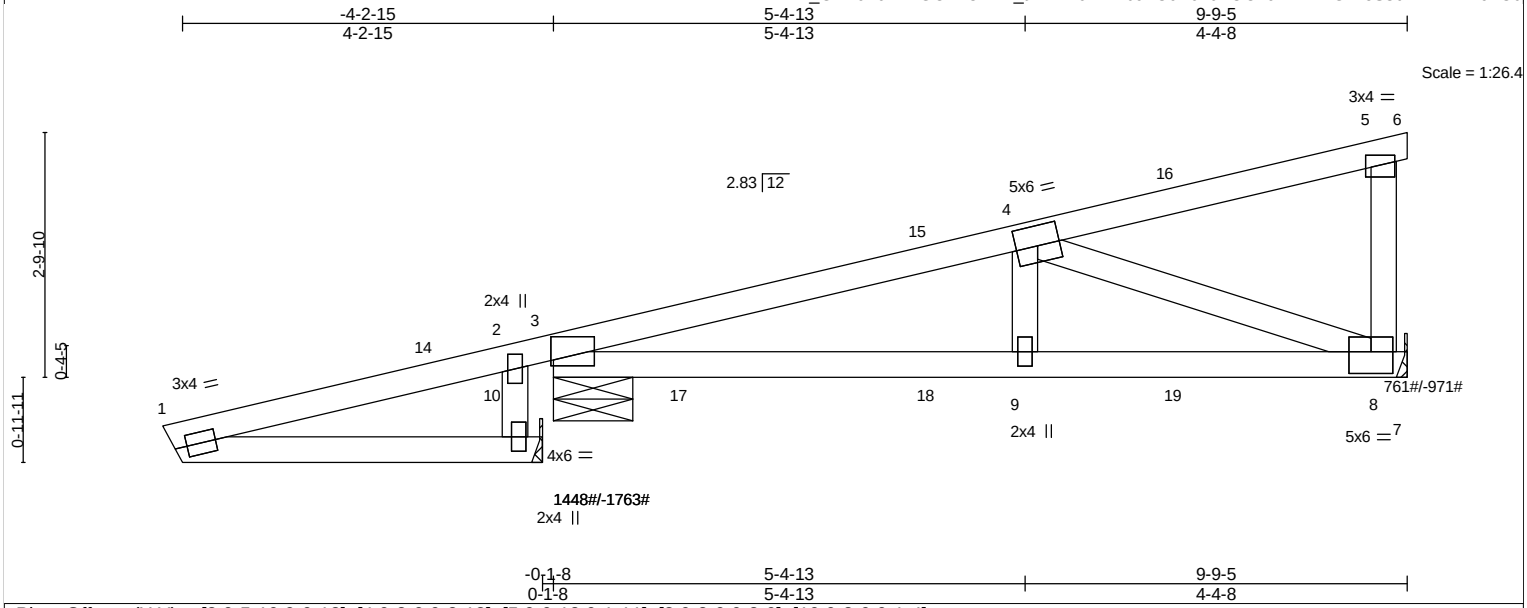

Plate Offsets (X,Y)-- [3:0-5-10,0-0-13], [4:0-3-0,0-2-12], [5:0-0-12,0-1-11], [8:0-3-0,0-3-0], [10:0-2-0,0-1-4]

LOADING (psf)		**SPACING-**	2-0-0	**CSI.**		**DEFL.**	in	(loc)	l/defl	L/d	**PLATES**	**GRIP**
TCLL	30.0	Plate Grip DOL	1.33	TC	0.82	Vert(LL)	0.08	8-9	>999	360	MT20	244/190
TCDL	15.0	Lumber DOL	1.33	BC	0.72	Vert(CT)	-0.07	8-9	>999	180		
BCLL	0.0	Rep Stress Incr	NO	WB	0.50	Horz(CT)	-0.02	8	n/a	n/a		
BCDL	10.0	Code FBC2020/TPI2014		Matrix-MSH							Weight: 55 lb	FT = 0%

LUMBER-
TOP CHORD 2x4 SP No.1
BOT CHORD 2x4 SP No.2
WEBS 2x4 SP No.3
OTHERS 2x4 SP No.3

BRACING-
TOP CHORD Structural wood sheathing directly applied or 5-1-11 oc purlins, except end verticals.
BOT CHORD Rigid ceiling directly applied or 4-4-15 oc bracing.

MiTek recommends that Stabilizers and required cross bracing be installed during truss erection, in accordance with Stabilizer Installation guide.

REACTIONS. (lb/size) 3=988/0-10-15 (min. 0-1-11), 8=580/Mechanical, 10=0/Mechanical
Max Horz 3=641(LC 13), 10=1027(LC 4)
Max Uplift3=-1763(LC 4), 8=-971(LC 4)
Max Grav 3=1448(LC 21), 8=761(LC 21)

FORCES. (lb) - Max. Comp./Max. Ten. - All forces 250 (lb) or less except when shown.
TOP CHORD 1-14=-990/690, 2-14=-977/725, 2-3=-985/735, 3-15=-1205/1406, 4-15=-1174/1412, 4-16=-293/244, 5-8=-249/382
BOT CHORD 3-17=-1669/1280, 17-18=-1669/1280, 9-18=-1669/1280, 9-19=-1669/1280, 8-19=-1669/1280
WEBS 4-8=-1289/1683, 1-10=-704/1028

NOTES- (9-10)
1) Unbalanced roof live loads have been considered for this design.
2) Wind: ASCE 7-16; Vult=175mph (3-second gust) Vasd=136mph; HVHZ; TCDL=5.0psf; BCDL=5.0psf; h=28ft; Cat. II; Exp C; Part. Encl., GCpi=0.55; C-C Corner(3) -4-4-5 to 0-0-0, Exterior(2R) 0-0-0 to 9-9-5; Lumber DOL=1.60 plate grip DOL=1.60
3) Building Designer / Project engineer responsible for verifying applied roof live load shown covers rain loading requirements specific to the use of this truss component.
4) This truss has been designed for a 10.0 psf bottom chord live load nonconcurrent with any other live loads.
5) Refer to girder(s) for truss to truss connections.
6) Provide mechanical connection (by others) of truss to bearing plate capable of withstanding 1763 lb uplift at joint 3 and 971 lb uplift at joint 8.
7) Hanger(s) or other connection device(s) shall be provided sufficient to support concentrated load(s) 397 lb down and 328 lb up at -1-3-15, 397 lb down and 328 lb up at -1-3-15, 346 lb down and 252 lb up at 4-4-0, 346 lb down and 252 lb up at 4-4-0, and 469 lb down and 457 lb up at 7-1-15, and 469 lb down and 457 lb up at 7-1-15 on top chord, and 125 lb down and 136 lb up at 1-6-1, 125 lb down and 136 lb up at 1-6-1, 11 lb down and 4 lb up at 4-4-0, 11 lb down and 4 lb up at 4-4-0, and 40 lb down and 26 lb up at 7-1-15, and 40 lb down and 26 lb up at 7-1-15 on bottom chord. The design/selection of such connection device(s) is the responsibility of others.
8) In the LOAD CASE(S) section, loads applied to the face of the truss are noted as front (F) or back (B).
9) All truss to truss connection by TCI are on the Truss Placement plan.
10) ARMANDO R. PEREZ PE. # 28026 Ph: (305) 882-8826

LOAD CASE(S) Standard
1) Dead + Roof Live (balanced): Lumber Increase=1.33, Plate Increase=1.33
Uniform Loads (plf)
Vert: 1-5=-90, 5-6=-30, 7-11=-20
Concentrated Loads (lb)
Vert: 14=-102(F=-51, B=-51) 16=-95(F=-48, B=-48) 17=116(F=58, B=58) 18=7(F=4, B=4) 19=-43(F=-21, B=-21)

Job	Truss	Truss Type	Qty	Ply	12715 ROLLING ROAD DR, PINECREST, FL.
12715	H1	Hip	1	1	Job Reference (optional)

Trusscorp Int., 9590 NW 89 AVE, Medley, FL

8.820 s Dec 4 2024 MiTek Industries, Inc. Thu Jun 5 12:42:00 2025 Page 1
ID:_GLN6EJBZ1GCD23RDL_tAxzKvJz-tOjMl4KU8At05hM4GY6AkK6JuSduwrIGY?nRJfz9LOb

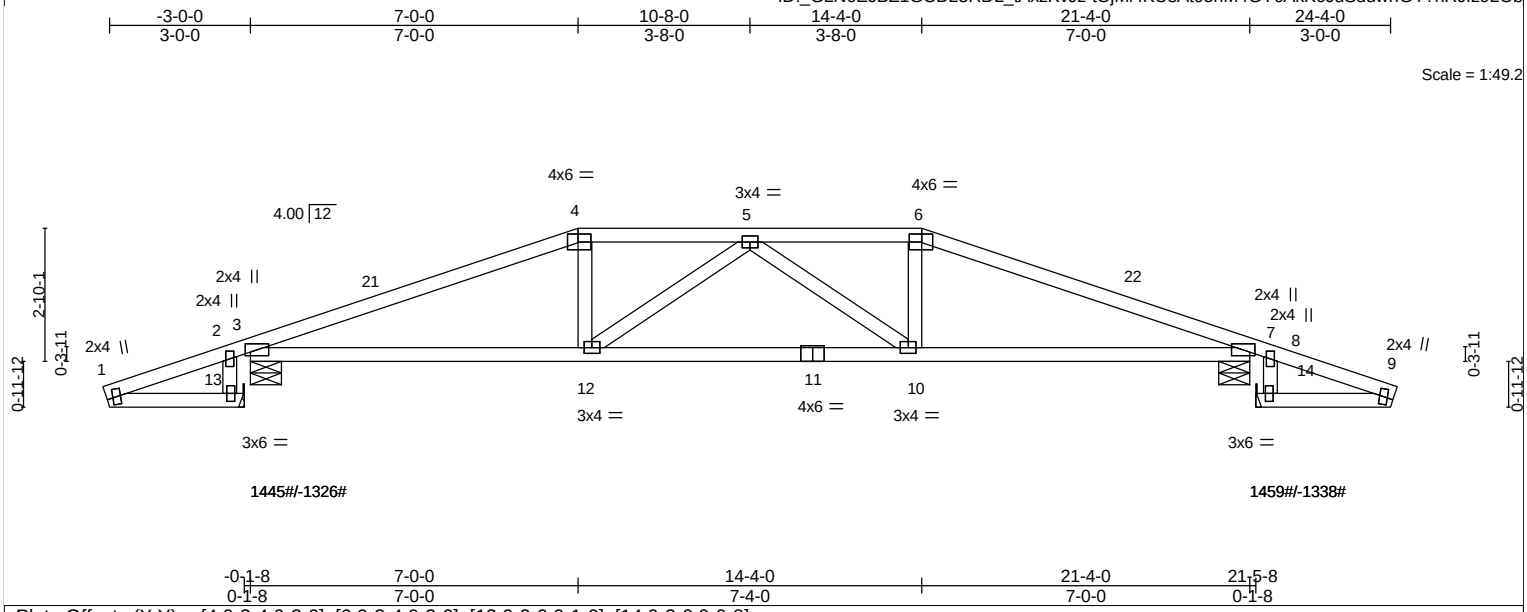

Plate Offsets (X,Y)-- [4:0-3-4,0-2-0], [6:0-3-4,0-2-0], [13:0-2-0,0-1-0], [14:0-2-0,0-0-8]

LOADING (psf)		**SPACING-**	2-0-0	**CSI.**		**DEFL.**	in	(loc)	l/defl	L/d	**PLATES**	**GRIP**
TCLL	30.0	Plate Grip DOL	1.33	TC	0.75	Vert(LL)	0.20	10-12	>999	360	MT20	244/190
TCDL	15.0	Lumber DOL	1.33	BC	0.67	Vert(CT)	-0.30	10-12	>856	180		
BCLL	0.0	Rep Stress Incr	YES	WB	0.17	Horz(CT)	0.08	7	n/a	n/a		
BCDL	10.0	Code FBC2020/TPI2014		Matrix-AS							Weight: 104 lb	FT = 0%

LUMBER-
TOP CHORD 2x4 SP No.1 *Except*
T2: 2x4 SP No.2
BOT CHORD 2x4 SP No.2
WEBS 2x4 SP No.3
OTHERS 2x4 SP No.3

BRACING-
TOP CHORD Structural wood sheathing directly applied.
BOT CHORD Rigid ceiling directly applied.

MiTek recommends that Stabilizers and required cross bracing be installed during truss erection, in accordance with Stabilizer Installation guide.

REACTIONS. (lb/size) 3=1445/0-8-0 (min. 0-1-11), 13=-0/Mechanical, 14=-0/Mechanical, 7=1459/0-8-0 (min. 0-1-12)
Max Horz 3=240(LC 9), 13=281(LC 4), 14=-147(LC 4)
Max Uplift3=-1326(LC 4), 7=-1338(LC 4)
Max Grav 3=1445(LC 1), 7=1459(LC 1)

FORCES. (lb) - Max. Comp./Max. Ten. - All forces 250 (lb) or less except when shown.
TOP CHORD 1-2=-261/256, 2-3=-258/272, 3-21=-2350/2032, 4-21=-2239/2052, 4-5=-2139/2058, 5-6=-2103/2027, 6-22=-2200/2022, 7-22=-2316/2003
BOT CHORD 3-12=-1823/2161, 11-12=-2055/2365, 10-11=-2055/2365, 7-10=-1792/2124
WEBS 4-12=-91/359, 5-12=-397/280, 5-10=-435/318, 6-10=-98/366, 1-13=-194/281

NOTES- (9-10)
1) Unbalanced roof live loads have been considered for this design.
2) Wind: ASCE 7-16; Vult=175mph (3-second gust) Vasd=136mph; HVHZ; TCDL=5.0psf; BCDL=5.0psf; h=28ft; Cat. II; Exp C; Encl., GCpi=0.18; C-C Exterior(2E) -3-1-3 to 0-3-7, Interior(1) 0-3-7 to 2-9-1, Exterior(2R) 2-9-1 to 18-6-15, Interior(1) 18-6-15 to 21-4-0, Exterior(2E) 21-4-0 to 24-5-3; Lumber DOL=1.60 plate grip DOL=1.60
3) Building Designer / Project engineer responsible for verifying applied roof live load shown covers rain loading requirements specific to the use of this truss component.
4) Provide adequate drainage to prevent water ponding.
5) This truss has been designed for a 10.0 psf bottom chord live load nonconcurrent with any other live loads.
6) Refer to girder(s) for truss to truss connections.
7) Provide mechanical connection (by others) of truss to bearing plate capable of withstanding 1326 lb uplift at joint 3 and 1338 lb uplift at joint 7.
8) This truss design requires that a minimum of 7/16" structural wood sheathing be applied directly to the top chord and 1/2" gypsum sheetrock be applied directly to the bottom chord.
9) All truss to truss connection by TCI are on the Truss Placement plan.
10) ARMANDO R. PEREZ PE. # 28026 Ph: (305) 882-8826

LOAD CASE(S) Standard

Job	Truss	Truss Type	Qty	Ply	12715 ROLLING ROAD DR, PINECREST, FL.
12715	H1T	HIP	1	1	Job Reference (optional)

Trusscorp Int., 9590 NW 89 AVE, Medley, FL

8.820 s Dec 4 2024 MiTek Industries, Inc. Thu Jun 5 12:42:02 2025 Page 1
ID:_GLN6EJBZ1GCD23RDL_tAxzKvJz-pmr7AlMlgn7jK?VTOy8eplBb?GHsOkOZ?IGYNYz9LOZ

-2-10-8	7-0-0	10-8-0	14-4-0	21-4-0	24-2-8
2-10-8	7-0-0	3-8-0	3-8-0	7-0-0	2-10-8

Scale: 1/4"=1'

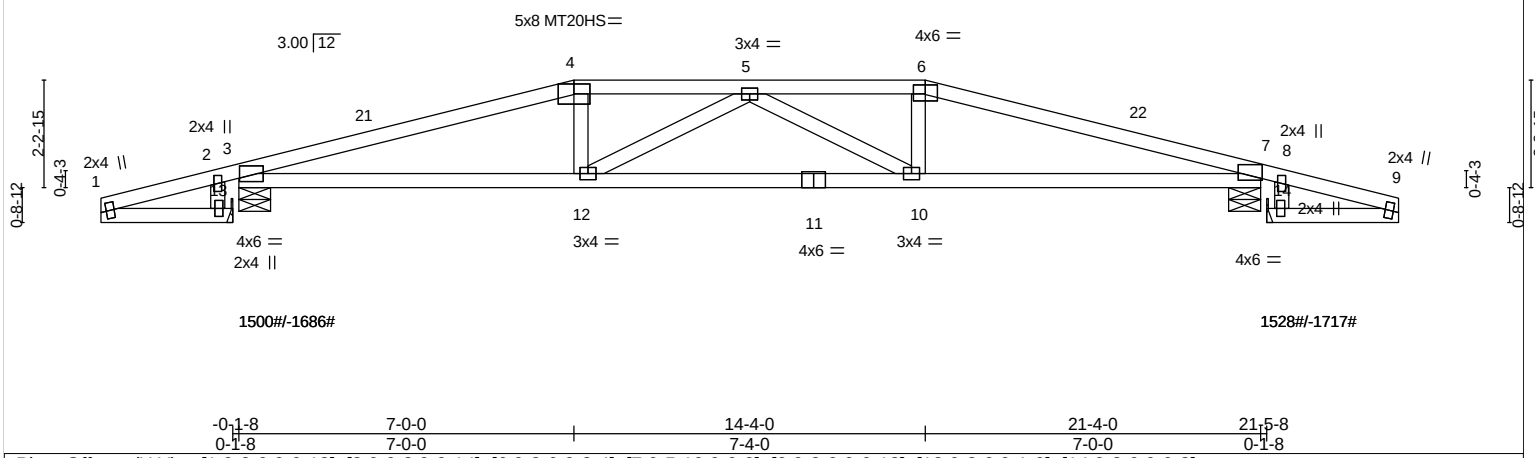

-0-1-8	7-0-0	14-4-0	21-4-0	21-5-8
0-1-8	7-0-0	7-4-0	7-0-0	0-1-8

Plate Offsets (X,Y)-- [1:0-2-0,0-0-13], [3:0-0-3,0-0-14], [6:0-3-0,0-2-4], [7:0-5-10,0-0-9], [9:0-2-0,0-0-13], [13:0-2-0,0-1-0], [14:0-2-0,0-0-8]

LOADING (psf)		**SPACING-**	2-0-0	**CSI.**		**DEFL.**	in	(loc)	l/defl	L/d	**PLATES**	**GRIP**
TCLL	30.0	Plate Grip DOL	1.33	TC	0.97	Vert(LL)	0.39	10-12	>662	360	MT20	244/190
TCDL	15.0	Lumber DOL	1.33	BC	0.83	Vert(CT)	-0.45	10-12	>575	180	MT20HS	187/143
BCLL	0.0	Rep Stress Incr	YES	WB	0.19	Horz(CT)	0.09	7	n/a	n/a		
BCDL	10.0	Code FBC2020/TPI2014		Matrix-AS							Weight: 99 lb	FT = 0%

LUMBER-
TOP CHORD 2x4 SP No.1 *Except*
T2: 2x4 SP No.2, T3: 2x4 SP 2400F 2.0E
BOT CHORD 2x4 SP No.2
WEBS 2x4 SP No.3
OTHERS 2x4 SP No.3

BRACING-
TOP CHORD Structural wood sheathing directly applied.
BOT CHORD Rigid ceiling directly applied.

MiTek recommends that Stabilizers and required cross bracing be installed during truss erection, in accordance with Stabilizer Installation guide.

REACTIONS. (lb/size) 3=1422/0-8-0 (min. 0-1-12), 13=0/Mechanical, 14=0/Mechanical, 7=1449/0-8-0 (min. 0-1-13)
Max Horz 3=-450(LC 4), 13=335(LC 4), 14=-258(LC 9)
Max Uplift3=-1686(LC 4), 7=-1717(LC 4)
Max Grav 3=1500(LC 5), 7=1528(LC 5)

FORCES. (lb) - Max. Comp./Max. Ten. - All forces 250 (lb) or less except when shown.
TOP CHORD 1-2=-318/223, 2-3=-319/236, 3-21=-3002/3265, 4-21=-2973/3279, 4-5=-2949/3287, 5-6=-2860/3187, 6-22=-2885/3183, 7-22=-2916/3169
BOT CHORD 3-12=-2814/2553, 11-12=-3212/2834, 10-11=-3212/2834, 7-10=-2712/2463
WEBS 4-12=-134/356, 5-12=-485/444, 5-10=-565/557, 6-10=-158/372, 1-13=-193/336, 9-14=-115/259

NOTES- (10-11)
1) Unbalanced roof live loads have been considered for this design.
2) Wind: ASCE 7-16; Vult=175mph (3-second gust) Vasd=136mph; HVHZ; TCDL=5.0psf; BCDL=5.0psf; h=28ft; Cat. II; Exp C; Part. Encl., GCpi=0.55; C-C Exterior(2E) -2-10-15 to 0-0-0, Interior(1) 0-0-0 to 2-9-1, Exterior(2R) 2-9-1 to 18-6-15, Interior(1) 18-6-15 to 21-2-15, Exterior(2E) 21-2-15 to 24-2-15; Lumber DOL=1.60 plate grip DOL=1.60
3) Building Designer / Project engineer responsible for verifying applied roof live load shown covers rain loading requirements specific to the use of this truss component.
4) Provide adequate drainage to prevent water ponding.
5) All plates are MT20 plates unless otherwise indicated.
6) This truss has been designed for a 10.0 psf bottom chord live load nonconcurrent with any other live loads.
7) Refer to girder(s) for truss to truss connections.
8) Provide mechanical connection (by others) of truss to bearing plate capable of withstanding 1686 lb uplift at joint 3 and 1717 lb uplift at joint 7.
9) This truss design requires that a minimum of 7/16" structural wood sheathing be applied directly to the top chord and 1/2" gypsum sheetrock be applied directly to the bottom chord.
10) All truss to truss connection by TCI are on the Truss Placement plan.
11) ARMANDO R. PEREZ PE. # 28026 Ph: (305) 882-8826

LOAD CASE(S) Standard

Job	Truss	Truss Type	Qty	Ply	12715 ROLLING ROAD DR, PINECREST, FL.
12715	H2	HIP	1	1	Job Reference (optional)

Trusscorp Int., 9590 NW 89 AVE, Medley, FL

8.820 s Dec 4 2024 MiTek Industries, Inc. Thu Jun 5 12:42:04 2025 Page 1
ID:_GLN6EJBZ1GCD23RDL_tAxzKvJz-l9ztaRN?CPNRaJfrVNB6uAH_13zPseWsScleSQz9LOX

-3-0-0	4-4-15	9-0-0	12-4-0	16-11-1	21-4-0	24-4-0
3-0-0	4-4-15	4-7-2	3-4-0	4-7-1	4-4-15	3-0-0

Scale = 1:46.2

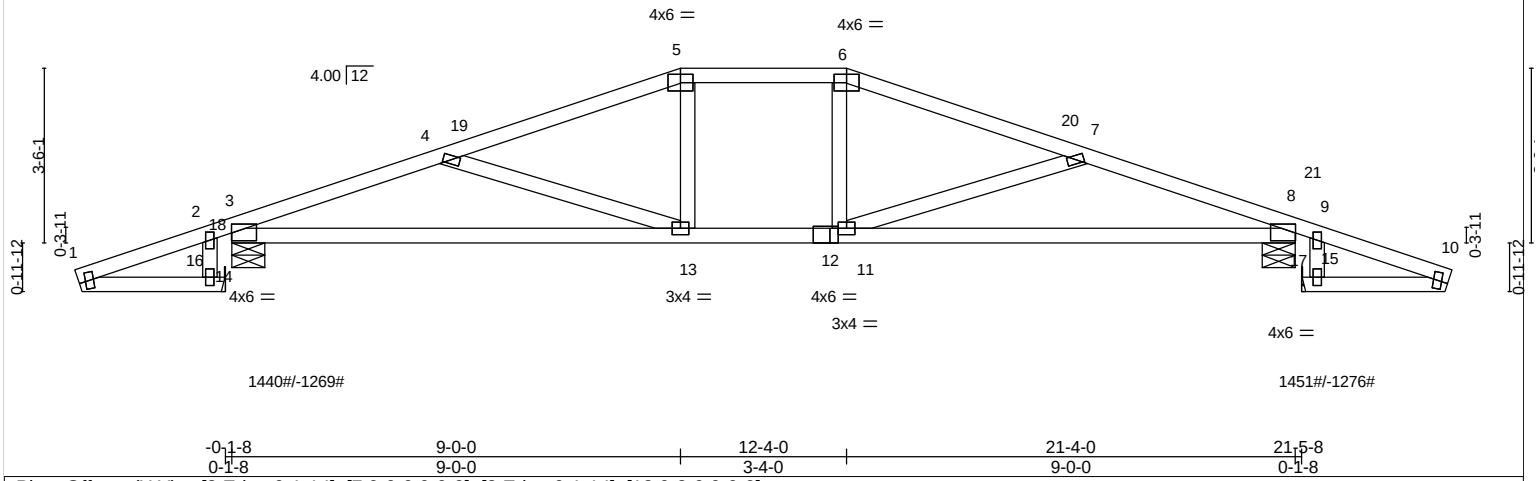

-0-1-8	9-0-0	12-4-0	21-4-0	21-5-8
0-1-8	9-0-0	3-4-0	9-0-0	0-1-8

Plate Offsets (X,Y)-- [3:Edge,0-1-14], [7:0-0-0,0-0-0], [8:Edge,0-1-14], [12:0-2-0,0-0-0]

LOADING (psf)		**SPACING-**	2-0-0	**CSI.**		**DEFL.**	in	(loc)	l/defl	L/d	**PLATES**	**GRIP**
TCLL	30.0	Plate Grip DOL	1.33	TC	0.81	Vert(LL)	-0.21	3-13	>999	360	MT20	244/190
TCDL	15.0	Lumber DOL	1.33	BC	0.83	Vert(CT)	-0.40	3-13	>625	180		
BCLL	0.0	Rep Stress Incr	YES	WB	0.22	Horz(CT)	0.07	8	n/a	n/a		
BCDL	10.0	Code FBC2020/TPI2014		Matrix-S							Weight: 109 lb	FT = 0%

LUMBER-
TOP CHORD 2x4 SP No.2
BOT CHORD 2x4 SP No.2
WEBS 2x4 SP No.3
OTHERS 2x4 SP No.3

BRACING-
TOP CHORD Structural wood sheathing directly applied or 3-5-4 oc purlins.
BOT CHORD Rigid ceiling directly applied or 3-11-12 oc bracing.

MiTek recommends that Stabilizers and required cross bracing be installed during truss erection, in accordance with Stabilizer Installation guide.

REACTIONS. (lb/size) 3=1440/0-8-0 (min. 0-1-11), 8=1451/0-8-0 (min. 0-1-11), 14=0/Mechanical, 15=-0/Mechanical
Max Horz 3=262(LC 9), 14=418(LC 4), 15=-320(LC 4)
Max Uplift3=-1269(LC 4), 8=-1276(LC 4)
Max Grav 3=1440(LC 1), 8=1451(LC 1)

FORCES. (lb) - Max. Comp./Max. Ten. - All forces 250 (lb) or less except when shown.
TOP CHORD 1-2=-389/323, 2-18=-295/246, 3-18=-295/242, 3-4=-2293/2020, 4-19=-1890/1643, 5-19=-1819/1657, 5-6=-1735/1664, 6-20=-1819/1655, 7-20=-1888/1642, 7-8=-2252/1984, 9-10=-297/228
BOT CHORD 3-13=-2000/2206, 12-13=-1550/1890, 11-12=-1550/1890, 8-11=-1958/2158
WEBS 4-13=-424/476, 5-13=-75/265, 6-11=-62/257, 7-11=-381/431, 1-16=-266/419, 14-16=-265/418, 15-17=-163/320, 10-17=-164/320

NOTES- (9-10)
1) Unbalanced roof live loads have been considered for this design.
2) Wind: ASCE 7-16; Vult=175mph (3-second gust) Vasd=136mph; HVHZ; TCDL=5.0psf; BCDL=5.0psf; h=28ft; Cat. II; Exp C; Encl., GCpi=0.18; C-C Exterior(2E) -3-1-3 to -0-1-3, Interior(1) -0-1-3 to 4-9-1, Exterior(2R) 4-9-1 to 16-6-15, Interior(1) 16-6-15 to 21-5-3, Exterior(2E) 21-5-3 to 24-5-3; Lumber DOL=1.60 plate grip DOL=1.60
3) Building Designer / Project engineer responsible for verifying applied roof live load shown covers rain loading requirements specific to the use of this truss component.
4) Provide adequate drainage to prevent water ponding.
5) All plates are 2x4 MT20 unless otherwise indicated.
6) This truss has been designed for a 10.0 psf bottom chord live load nonconcurrent with any other live loads.
7) Refer to girder(s) for truss to truss connections.
8) Provide mechanical connection (by others) of truss to bearing plate capable of withstanding 1269 lb uplift at joint 3 and 1276 lb uplift at joint 8.
9) All truss to truss connection by TCI are on the Truss Placement plan.
10) ARMANDO R. PEREZ PE. # 28026 Ph: (305) 882-8826

LOAD CASE(S) Standard

Job	Truss	Truss Type	Qty	Ply	12715 ROLLING ROAD DR, PINECREST, FL.
12715	H2T	HIP	1	1	Job Reference (optional)

Trusscorp Int., 9590 NW 89 AVE, Medley, FL

8.820 s Dec 4 2024 MiTek Industries, Inc. Thu Jun 5 12:42:05 2025 Page 1
ID:_GLN6EJBZ1GCD23RDL_tAxzKvJz-DLXFonOdziWIBTE235iLRNp7hTGMb3W?hGUC_tz9LOW

0-10-8	4-4-14	9-0-0	12-4-0	16-11-2	21-4-0	22-2-8
0-10-8	4-4-14	4-7-2	3-4-0	4-7-2	4-4-14	0-10-8

Scale = 1:37.5

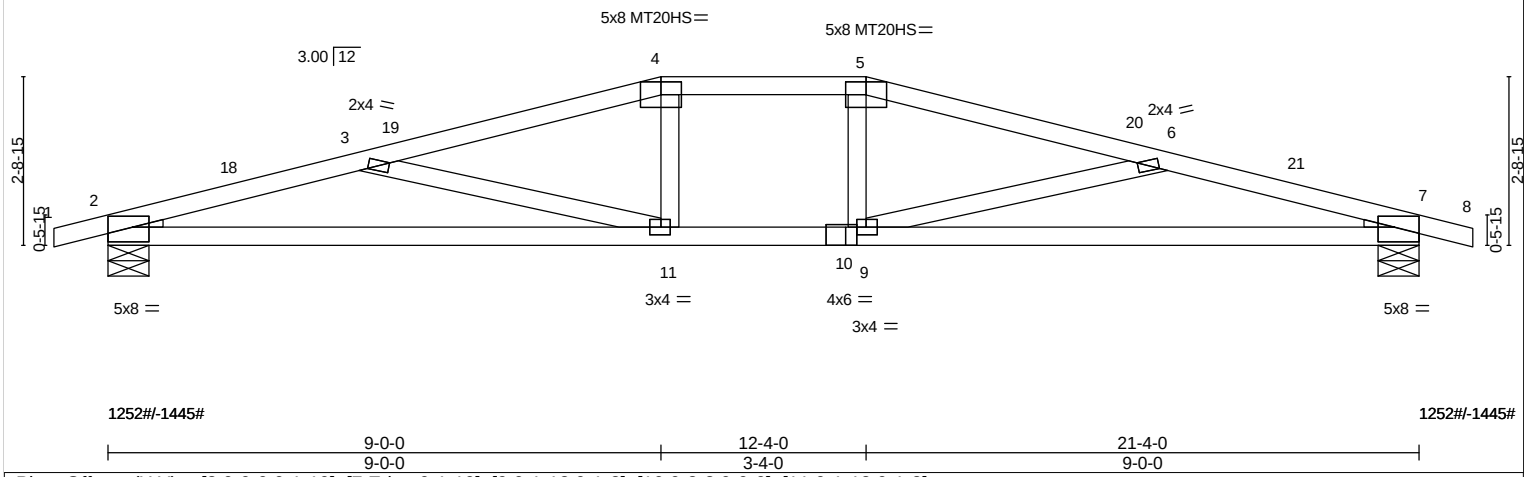

9-0-0	12-4-0	21-4-0
9-0-0	3-4-0	9-0-0

Plate Offsets (X,Y)-- [2:0-0-0,0-1-10], [7:Edge,0-1-10], [9:0-1-12,0-1-8], [10:0-2-3,0-0-0], [11:0-1-12,0-1-8]

LOADING (psf)		**SPACING-**	2-0-0	**CSI.**		**DEFL.**	in	(loc)	l/defl	L/d	**PLATES**	**GRIP**
TCLL	30.0	Plate Grip DOL	1.33	TC	0.94	Vert(LL)	0.35	9-11	>721	360	MT20	244/190
TCDL	15.0	Lumber DOL	1.33	BC	0.91	Vert(CT)	-0.44	9-17	>578	180	MT20HS	187/143
BCLL	0.0	Rep Stress Incr	YES	WB	0.36	Horz(CT)	0.09	7	n/a	n/a		
BCDL	10.0	Code FBC2020/TPI2014		Matrix-AS							Weight: 89 lb	FT = 0%

LUMBER-
TOP CHORD 2x4 SP No.1 *Except*
T2: 2x4 SP No.2
BOT CHORD 2x4 SP No.2
WEBS 2x4 SP No.3
WEDGE
Left: 2x2 SP No.3 , Right: 2x2 SP No.3

BRACING-
TOP CHORD Structural wood sheathing directly applied.
BOT CHORD Rigid ceiling directly applied.

MiTek recommends that Stabilizers and required cross bracing be installed during truss erection, in accordance with Stabilizer Installation guide.

REACTIONS. (lb/size) 2=1252/0-8-0 (min. 0-1-8), 7=1252/0-8-0 (min. 0-1-8)
Max Uplift2=-1445(LC 4), 7=-1445(LC 4)

FORCES. (lb) - Max. Comp./Max. Ten. - All forces 250 (lb) or less except when shown.
TOP CHORD 2-18=-3435/3711, 3-18=-3415/3718, 3-19=-2807/3005, 4-19=-2794/3016, 4-5=-2770/3028, 5-20=-2794/3016, 6-20=-2807/3005, 6-21=-3416/3718, 7-21=-3435/3711
BOT CHORD 2-11=-3452/3268, 10-11=-2674/2627, 9-10=-2674/2627, 7-9=-3452/3268
WEBS 3-11=-731/807, 4-11=-114/282, 5-9=-114/282, 6-9=-731/807

NOTES- (9-10)
1) Unbalanced roof live loads have been considered for this design.
2) Wind: ASCE 7-16; Vult=175mph (3-second gust) Vasd=136mph; HVHZ; TCDL=5.0psf; BCDL=5.0psf; h=28ft; Cat. II; Exp C; Part. Encl., GCpi=0.55; C-C Exterior(2E) -0-10-8 to 2-1-8, Interior(1) 2-1-8 to 4-9-1, Exterior(2R) 4-9-1 to 16-6-15, Interior(1) 16-6-15 to 19-2-8, Exterior(2E) 19-2-8 to 22-2-8; Lumber DOL=1.60 plate grip DOL=1.60
3) Building Designer / Project engineer responsible for verifying applied roof live load shown covers rain loading requirements specific to the use of this truss component.
4) Provide adequate drainage to prevent water ponding.
5) All plates are MT20 plates unless otherwise indicated.
6) This truss has been designed for a 10.0 psf bottom chord live load nonconcurrent with any other live loads.
7) Provide mechanical connection (by others) of truss to bearing plate capable of withstanding 1445 lb uplift at joint 2 and 1445 lb uplift at joint 7.
8) This truss design requires that a minimum of 7/16" structural wood sheathing be applied directly to the top chord and 1/2" gypsum sheetrock be applied directly to the bottom chord.
9) All truss to truss connection by TCI are on the Truss Placement plan.
10) ARMANDO R. PEREZ PE. # 28026 Ph: (305) 882-8826

LOAD CASE(S) Standard

Job	Truss	Truss Type	Qty	Ply	12715 ROLLING ROAD DR, PINECREST, FL.
12715	H3T	HIP	1	1	Job Reference (optional)

Trusscorp Int., 9590 NW 89 AVE, Medley, FL

8.820 s Dec 4 2024 MiTek Industries, Inc. Thu Jun 5 12:42:07 2025 Page 1
ID:_GLN6EJBZ1GCD23RDL_tAxzKvJz-Ake0DTQtVKm0RmOQBWkpWovXMH0e3ynI9azJ3lz9LOU

-3-0-0	4-4-14	9-0-0	16-1-6	19-1-8	21-0-0	28-1-8	30-2-10
3-0-0	4-4-14	4-7-2	7-1-6	3-0-2	1-10-8	7-1-8	2-1-2

Scale = 1:58.4

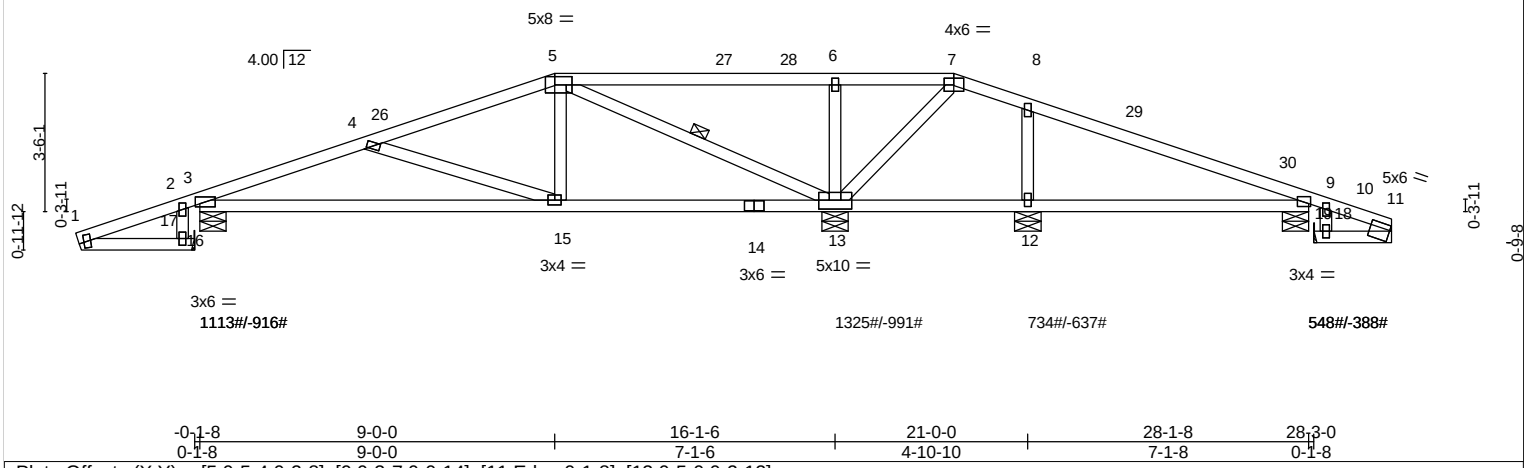

-0-1-8	9-0-0	16-1-6	21-0-0	28-1-8	28-3-0
0-1-8	9-0-0	7-1-6	4-10-10	7-1-8	0-1-8

Plate Offsets (X,Y)-- [5:0-5-4,0-2-8], [9:0-3-7,0-0-14], [11:Edge,0-1-8], [13:0-5-0,0-2-12]

LOADING (psf)		**SPACING-**	2-0-0	**CSI.**		**DEFL.**	in	(loc)	l/defl	L/d	**PLATES**	**GRIP**
TCLL	30.0	Plate Grip DOL	1.33	TC	0.67	Vert(LL)	-0.11	15-22	>999	360	MT20	244/190
TCDL	15.0	Lumber DOL	1.33	BC	0.66	Vert(CT)	-0.23	15-22	>825	180		
BCLL	0.0	Rep Stress Incr	YES	WB	0.44	Horz(CT)	0.03	13	n/a	n/a		
BCDL	10.0	Code FBC2020/TPI2014		Matrix-AS							Weight: 139 lb	FT = 0%

LUMBER-
TOP CHORD 2x4 SP No.2
BOT CHORD 2x4 SP No.2
WEBS 2x4 SP No.3
OTHERS 2x4 SP No.3

BRACING-
TOP CHORD Structural wood sheathing directly applied.
BOT CHORD Rigid ceiling directly applied.
WEBS 1 Row at midpt 5-13

MiTek recommends that Stabilizers and required cross bracing be installed during truss erection, in accordance with Stabilizer Installation guide.

REACTIONS. All bearings 0-8-0 except (jt=length) 16=Mechanical, 18=Mechanical.
(lb) - Max Horz 3=437(LC 1), 16=393(LC 4), 18=-172(LC 1)
Max Uplift All uplift 100 lb or less at joint(s) except 3=-916(LC 4), 13=-991(LC 4), 12=-637(LC 4), 9=-388(LC 4)
Max Grav All reactions 250 lb or less at joint(s) except 3=1113(LC 1), 13=1325(LC 9), 12=734(LC 10), 9=548(LC 10)

FORCES. (lb) - Max. Comp./Max. Ten. - All forces 250 (lb) or less except when shown.
TOP CHORD 1-2=-365/322, 2-3=-365/339, 3-4=-1622/1315, 4-26=-1093/862, 5-26=-1034/876, 5-27=-20/298, 27-28=-20/298, 6-28=-20/298, 6-7=-20/298, 8-29=-257/316, 29-30=-270/258, 9-30=-272/228
BOT CHORD 3-15=-1013/1303, 14-15=-480/822, 13-14=-480/822, 12-13=-394/504, 9-12=-394/504
WEBS 4-15=-524/563, 5-15=-69/399, 5-13=-1350/1043, 6-13=-614/646, 8-12=-590/672, 1-17=-265/394, 16-17=-265/393

NOTES- (10-11)
1) Unbalanced roof live loads have been considered for this design.
2) Wind: ASCE 7-16; Vult=175mph (3-second gust) Vasd=136mph; HVHZ; TCDL=5.0psf; BCDL=5.0psf; h=28ft; Cat. II; Exp C; Encl., GCpi=0.18; C-C Exterior(2E) -3-1-3 to 0-3-7, Interior(1) 0-3-7 to 4-9-1, Exterior(2R) 4-9-1 to 13-2-15, Interior(1) 13-2-15 to 14-10-9, Exterior(2R) 14-10-9 to 23-4-7, Interior(1) 23-4-7 to 27-3-3, Exterior(2E) 27-3-3 to 30-3-3; porch left exposed; Lumber DOL=1.60 plate grip DOL=1.60
3) Building Designer / Project engineer responsible for verifying applied roof live load shown covers rain loading requirements specific to the use of this truss component.
4) Provide adequate drainage to prevent water ponding.
5) All plates are 2x4 MT20 unless otherwise indicated.
6) This truss has been designed for a 10.0 psf bottom chord live load nonconcurrent with any other live loads.
7) Refer to girder(s) for truss to truss connections.
8) Provide mechanical connection (by others) of truss to bearing plate capable of withstanding 916 lb uplift at joint 3, 991 lb uplift at joint 13, 637 lb uplift at joint 12 and 388 lb uplift at joint 9.
9) This truss design requires that a minimum of 7/16" structural wood sheathing be applied directly to the top chord and 1/2" gypsum sheetrock be applied directly to the bottom chord.
10) All truss to truss connection by TCI are on the Truss Placement plan.
11) ARMANDO R. PEREZ PE. # 28026 Ph: (305) 882-8826

LOAD CASE(S) Standard

Job	Truss	Truss Type	Qty	Ply	12715 ROLLING ROAD DR, PINECREST, FL.
12715	H4	Hip	1	1	Job Reference (optional)

Trusscorp Int., 9590 NW 89 AVE, Medley, FL — 8.820 s Dec 4 2024 MiTek Industries, Inc. Thu Jun 5 12:42:09 2025 Page 1

ID:_GLN6EJBZ1GCD23RDL_tAxzKvJz-66mme9R80x0kg4YpIxmHbD_rg4gpXoubcuSP7ez9LOS

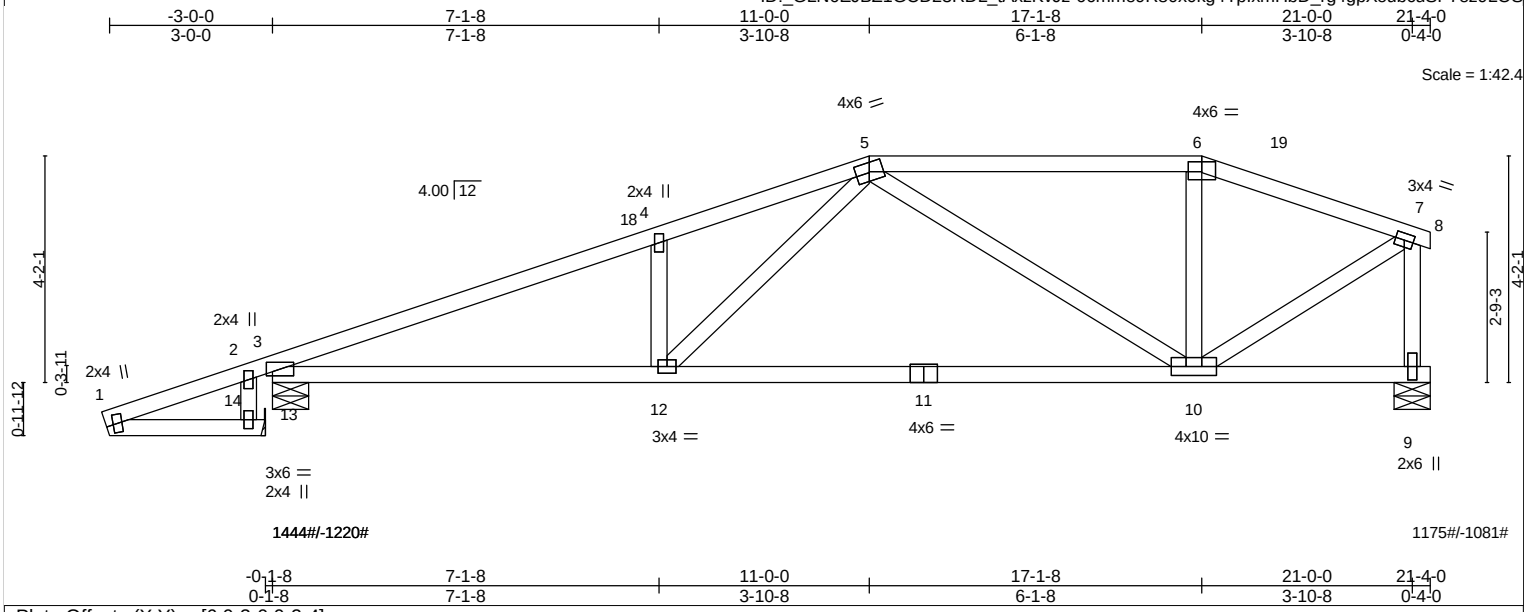

Plate Offsets (X,Y)-- [6:0-3-0,0-2-4]

LOADING (psf)		SPACING-	2-0-0	CSI.		DEFL.	in	(loc)	l/defl	L/d	PLATES	GRIP
TCLL	30.0	Plate Grip DOL	1.33	TC	0.81	Vert(LL)	-0.22	10-12	>999	360	MT20	244/190
TCDL	15.0	Lumber DOL	1.33	BC	0.81	Vert(CT)	-0.48	10-12	>528	180		
BCLL	0.0	Rep Stress Incr	YES	WB	0.66	Horz(CT)	0.05	9	n/a	n/a		
BCDL	10.0	Code FBC2020/TPI2014		Matrix-AS							Weight: 112 lb	FT = 0%

LUMBER-
TOP CHORD 2x4 SP No.2
BOT CHORD 2x4 SP No.2
WEBS 2x4 SP No.3
OTHERS 2x4 SP No.3

BRACING-
TOP CHORD Structural wood sheathing directly applied.
BOT CHORD Rigid ceiling directly applied.

MiTek recommends that Stabilizers and required cross bracing be installed during truss erection, in accordance with Stabilizer Installation guide.

REACTIONS. (lb/size) 3=1444/0-8-0 (min. 0-1-11), 9=1175/0-8-0 (min. 0-1-8), 13=0/Mechanical
Max Horz 3=222(LC 1), 13=317(LC 4)
Max Uplift3=-1220(LC 4), 9=-1081(LC 4)
Max Grav 3=1444(LC 1), 9=1175(LC 1)

FORCES. (lb) - Max. Comp./Max. Ten. - All forces 250 (lb) or less except when shown.
TOP CHORD 1-2=-294/282, 2-3=-292/299, 3-18=-2386/1845, 4-18=-2191/1846, 4-5=-2333/2027, 5-6=-1030/1036, 6-19=-1033/1009, 7-19=-1122/1002
BOT CHORD 3-12=-1825/2159, 11-12=-1398/1544, 10-11=-1398/1544
WEBS 4-12=-448/533, 5-12=-605/869, 5-10=-665/637, 6-10=-215/296, 7-10=-1040/1231, 7-9=-1169/1085, 1-14=-222/318, 13-14=-222/317

NOTES- (9-10)
1) Unbalanced roof live loads have been considered for this design.
2) Wind: ASCE 7-16; Vult=175mph (3-second gust) Vasd=136mph; HVHZ; TCDL=5.0psf; BCDL=5.0psf; h=28ft; Cat. II; Exp C; Encl., GCpi=0.18; C-C Exterior(2E) -3-1-3 to 0-3-7, Interior(1) 0-3-7 to 6-9-1, Exterior(2R) 6-9-1 to 18-4-0, Exterior(2E) 18-4-0 to 21-4-0; Lumber DOL=1.60 plate grip DOL=1.60
3) Building Designer / Project engineer responsible for verifying applied roof live load shown covers rain loading requirements specific to the use of this truss component.
4) Provide adequate drainage to prevent water ponding.
5) This truss has been designed for a 10.0 psf bottom chord live load nonconcurrent with any other live loads.
6) Refer to girder(s) for truss to truss connections.
7) Provide mechanical connection (by others) of truss to bearing plate capable of withstanding 1220 lb uplift at joint 3 and 1081 lb uplift at joint 9.
8) This truss design requires that a minimum of 7/16" structural wood sheathing be applied directly to the top chord and 1/2" gypsum sheetrock be applied directly to the bottom chord.
9) All truss to truss connection by TCI are on the Truss Placement plan.
10) ARMANDO R. PEREZ PE. # 28026 Ph: (305) 882-8826

LOAD CASE(S) Standard

Job	Truss	Truss Type	Qty	Ply	12715 ROLLING ROAD DR, PINECREST, FL.
12715	H4T	HIP	1	1	Job Reference (optional)

Trusscorp Int., 9590 NW 89 AVE, Medley, FL — 8.820 s Dec 4 2024 MiTek Industries, Inc. Thu Jun 5 12:42:11 2025 Page 1

ID:_GLN6EJBZ1GCD23RDL_tAxzKvJz-2VuW2qTOYYGSvOhBQLplge3B2uO4?mxu3CxWCWz9LOQ

-3-0-0	7-1-8	11-0-0	17-1-8	21-0-0	28-1-8	31-1-8
3-0-0	7-1-8	3-10-8	6-1-8	3-10-8	7-1-8	3-0-0

Scale = 1:61.4

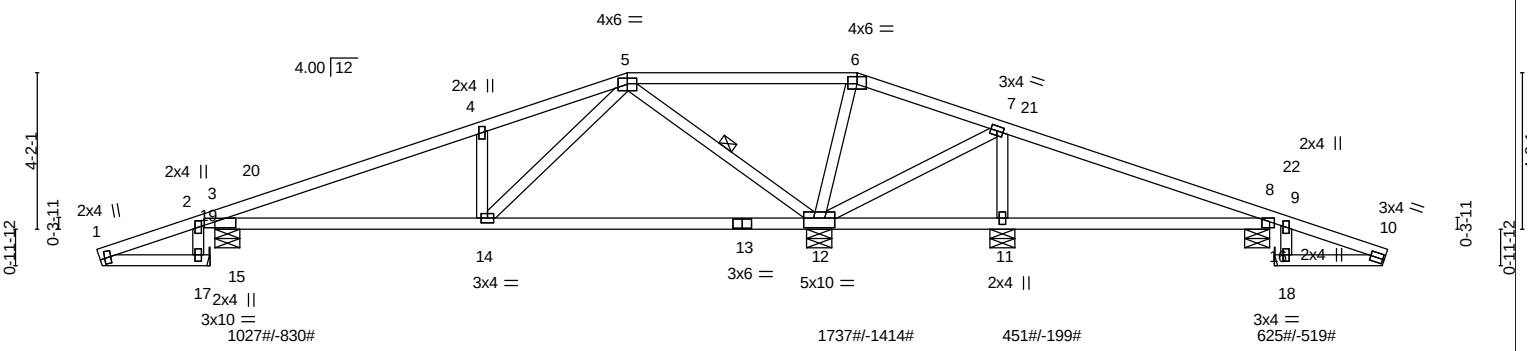

-0-1-8	7-1-8	11-0-0	16-1-6	21-0-0	28-1-8	28-3-0
0-1-8	7-1-8	3-10-8	5-1-6	4-10-10	7-1-8	0-1-8

Plate Offsets (X,Y)-- [3:0-5-0,0-0-8], [5:0-3-0,0-1-12], [6:0-3-0,0-2-4], [8:0-2-7,0-1-14], [12:0-5-0,0-3-0]

LOADING (psf)		**SPACING-**	2-0-0	**CSI.**		**DEFL.**	in	(loc)	l/defl	L/d	**PLATES**	**GRIP**
TCLL	30.0	Plate Grip DOL	1.33	TC	0.82	Vert(LL)	-0.13	12-14	>999	360	MT20	244/190
TCDL	15.0	Lumber DOL	1.33	BC	0.63	Vert(CT)	-0.27	12-14	>704	180		
BCLL	0.0	Rep Stress Incr	YES	WB	0.36	Horz(CT)	0.02	12	n/a	n/a		
BCDL	10.0	Code FBC2020/TPI2014		Matrix-S							Weight: 143 lb	FT = 0%

LUMBER-
TOP CHORD 2x4 SP No.2
BOT CHORD 2x4 SP No.2
WEBS 2x4 SP No.3
OTHERS 2x4 SP No.3

BRACING-
TOP CHORD Structural wood sheathing directly applied or 4-7-3 oc purlins.
BOT CHORD Rigid ceiling directly applied or 6-0-0 oc bracing.
WEBS 1 Row at midpt 5-12

MiTek recommends that Stabilizers and required cross bracing be installed during truss erection, in accordance with Stabilizer Installation guide.

REACTIONS. All bearings 0-8-0 except (jt=length) 15=Mechanical, 16=Mechanical.
(lb) - Max Horz 3=166(LC 9), 15=293(LC 4), 16=-298(LC 4)
Max Uplift All uplift 100 lb or less at joint(s) except 3=-830(LC 4), 12=-1414(LC 4), 11=-199(LC 4), 8=-519(LC 4)
Max Grav All reactions 250 lb or less at joint(s) except 3=1027(LC 9), 12=1737(LC 1), 11=451(LC 10), 8=625(LC 10)

FORCES. (lb) - Max. Comp./Max. Ten. - All forces 250 (lb) or less except when shown.
TOP CHORD 1-2=-272/264, 3-20=-1095/677, 4-20=-878/678, 4-5=-1031/872, 5-6=-445/785, 6-7=-370/695, 7-21=-163/356, 8-21=-187/344, 9-10=-277/259
BOT CHORD 3-14=-708/1045, 13-14=-258/413, 12-13=-258/413
WEBS 4-14=-455/537, 5-14=-637/894, 6-12=-646/633, 7-11=-333/250, 7-12=-431/431, 1-17=-203/293, 15-17=-202/293, 16-18=-196/298, 10-18=-197/299, 5-12=-1266/1110

NOTES- (8-9)
1) Unbalanced roof live loads have been considered for this design.
2) Wind: ASCE 7-16; Vult=175mph (3-second gust) Vasd=136mph; HVHZ; TCDL=5.0psf; BCDL=5.0psf; h=28ft; Cat. II; Exp C; Encl., GCpi=0.18; C-C Exterior(2E) -3-1-3 to -0-1-3, Interior(1) -0-1-3 to 6-9-1, Exterior(2R) 6-9-1 to 21-4-7, Interior(1) 21-4-7 to 28-2-11, Exterior(2E) 28-2-11 to 31-2-11; porch left exposed; Lumber DOL=1.60 plate grip DOL=1.60
3) Building Designer / Project engineer responsible for verifying applied roof live load shown covers rain loading requirements specific to the use of this truss component.
4) Provide adequate drainage to prevent water ponding.
5) This truss has been designed for a 10.0 psf bottom chord live load nonconcurrent with any other live loads.
6) Refer to girder(s) for truss to truss connections.
7) Provide mechanical connection (by others) of truss to bearing plate capable of withstanding 830 lb uplift at joint 3, 1414 lb uplift at joint 12, 199 lb uplift at joint 11 and 519 lb uplift at joint 8.
8) All truss to truss connection by TCI are on the Truss Placement plan.
9) ARMANDO R. PEREZ PE. # 28026 Ph: (305) 882-8826

LOAD CASE(S) Standard

Job	Truss	Truss Type	Qty	Ply	12715 ROLLING ROAD DR, PINECREST, FL.
12715	H5	Hip	1	1	Job Reference (optional)

Trusscorp Int., 9590 NW 89 AVE, Medley, FL

8.820 s Dec 4 2024 MiTek Industries, Inc. Thu Jun 5 12:42:12 2025 Page 1
ID:_GLN6EJBZ1GCD23RDL_tAxzKvJz-WhSvGAU0JsOJXXGOz3K_DscMsIkWk6C1Ish4kzz9LOP

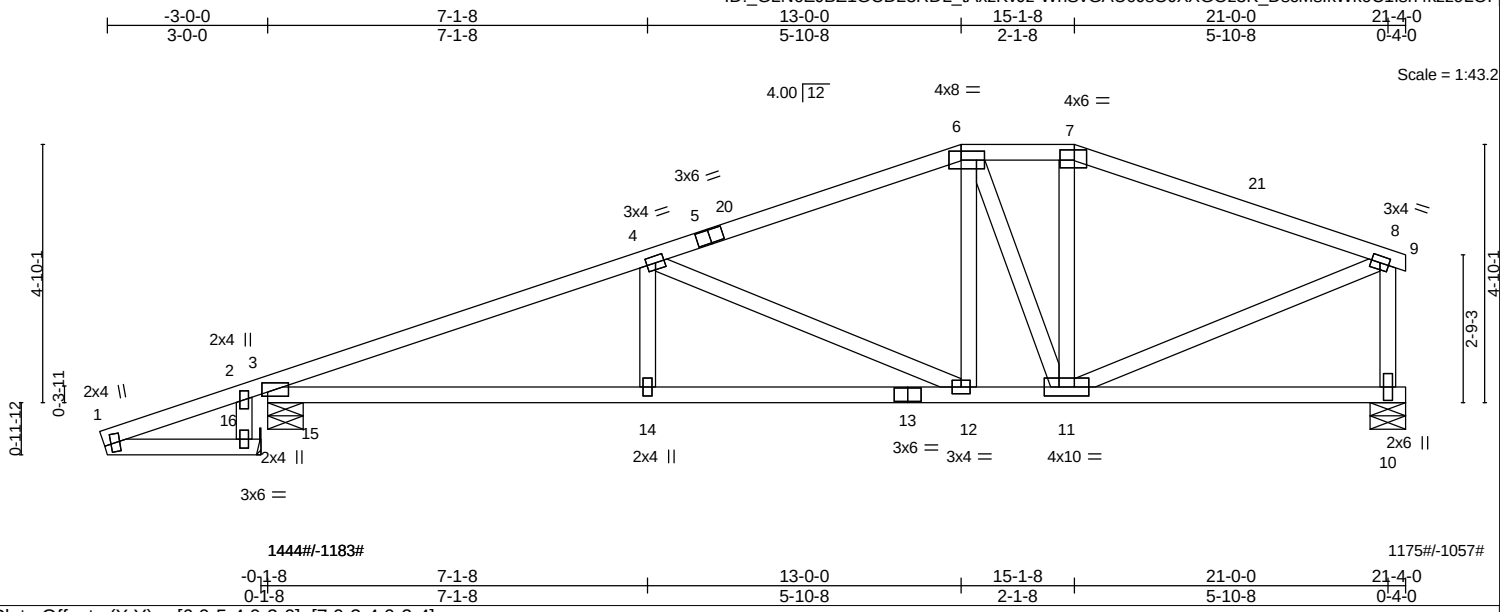

Plate Offsets (X,Y)-- [6:0-5-4,0-2-0], [7:0-3-4,0-2-4]

LOADING (psf)		SPACING-	2-0-0	CSI.		DEFL.	in	(loc)	l/defl	L/d	PLATES	GRIP
TCLL	30.0	Plate Grip DOL	1.33	TC	0.82	Vert(LL)	0.14	12-14	>999	360	MT20	244/190
TCDL	15.0	Lumber DOL	1.33	BC	0.62	Vert(CT)	-0.21	12-14	>999	180		
BCLL	0.0	Rep Stress Incr	YES	WB	0.81	Horz(CT)	0.05	10	n/a	n/a		
BCDL	10.0	Code FBC2020/TPI2014		Matrix-AS							Weight: 120 lb	FT = 0%

LUMBER-
TOP CHORD 2x4 SP No.2
BOT CHORD 2x4 SP No.2
WEBS 2x4 SP No.3
OTHERS 2x4 SP No.3

BRACING-
TOP CHORD Structural wood sheathing directly applied.
BOT CHORD Rigid ceiling directly applied.

MiTek recommends that Stabilizers and required cross bracing be installed during truss erection, in accordance with Stabilizer Installation guide.

REACTIONS. (lb/size) 3=1444/0-8-0 (min. 0-1-11), 10=1175/0-8-0 (min. 0-1-8), 15=-0/Mechanical
Max Horz 3=228(LC 1), 15=347(LC 4)
Max Uplift3=-1183(LC 4), 10=-1057(LC 4)
Max Grav 3=1444(LC 1), 10=1175(LC 1)

FORCES. (lb) - Max. Comp./Max. Ten. - All forces 250 (lb) or less except when shown.
TOP CHORD 1-2=-322/288, 2-3=-320/305, 3-4=-2394/1804, 4-5=-1423/1238, 5-20=-1376/1241, 6-20=-1330/1255, 6-7=-1128/1175, 7-21=-1189/1115, 8-21=-1248/1105
BOT CHORD 3-14=-1772/2173, 13-14=-1772/2173, 12-13=-1772/2173, 11-12=-1047/1276
WEBS 4-14=0/258, 4-12=-997/800, 6-12=-310/466, 8-11=-1009/1229, 8-10=-1125/1080, 1-16=-229/347, 15-16=-228/347, 6-11=-494/315

NOTES- (9-10)
1) Unbalanced roof live loads have been considered for this design.
2) Wind: ASCE 7-16; Vult=175mph (3-second gust) Vasd=136mph; HVHZ; TCDL=5.0psf; BCDL=5.0psf; h=28ft; Cat. II; Exp C; Encl., GCpi=0.18; C-C Exterior(2E) -3-1-3 to 0-3-7, Interior(1) 0-3-7 to 8-9-1, Exterior(2R) 8-9-1 to 18-4-0, Exterior(2E) 18-4-0 to 21-4-0; Lumber DOL=1.60 plate grip DOL=1.60
3) Building Designer / Project engineer responsible for verifying applied roof live load shown covers rain loading requirements specific to the use of this truss component.
4) Provide adequate drainage to prevent water ponding.
5) This truss has been designed for a 10.0 psf bottom chord live load nonconcurrent with any other live loads.
6) Refer to girder(s) for truss to truss connections.
7) Provide mechanical connection (by others) of truss to bearing plate capable of withstanding 1183 lb uplift at joint 3 and 1057 lb uplift at joint 10.
8) This truss design requires that a minimum of 7/16" structural wood sheathing be applied directly to the top chord and 1/2" gypsum sheetrock be applied directly to the bottom chord.
9) All truss to truss connection by TCI are on the Truss Placement plan.
10) ARMANDO R. PEREZ PE. # 28026 Ph: (305) 882-8826

LOAD CASE(S) Standard

Job	Truss	Truss Type	Qty	Ply	12715 ROLLING ROAD DR, PINECREST, FL.
12715	H5T	HIP	1	1	Job Reference (optional)

Trusscorp Int., 9590 NW 89 AVE, Medley, FL — 8.820 s Dec 4 2024 MiTek Industries, Inc. Thu Jun 5 12:42:14 2025 Page 1

ID:_GLN6EJBZ1GCD23RDL_tAxzKvJz-S4ZfhsVGrTe1mrQm5UMSIHhg95QAC?WKmAAAorz9LON

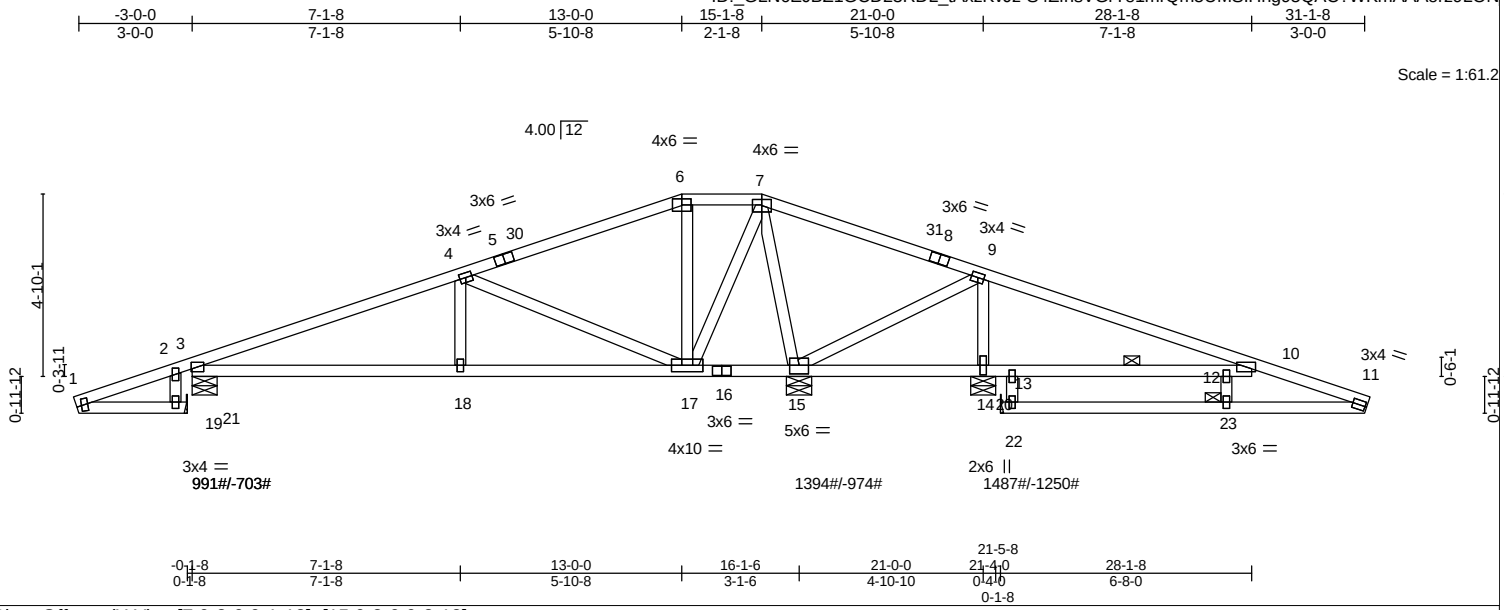

Plate Offsets (X,Y)-- [7:0-3-0,0-1-12], [15:0-3-0,0-2-12]

LOADING (psf)		SPACING-	2-0-0	CSI.		DEFL.	in	(loc)	l/defl	L/d	PLATES	GRIP
TCLL	30.0	Plate Grip DOL	1.33	TC	0.96	Vert(LL)	-0.04	18-26	>999	360	MT20	244/190
TCDL	15.0	Lumber DOL	1.33	BC	0.61	Vert(CT)	-0.11	18-26	>999	180		
BCLL	0.0	Rep Stress Incr	YES	WB	0.89	Horz(CT)	0.02	15	n/a	n/a		
BCDL	10.0	Code FBC2020/TPI2014		Matrix-AS							Weight: 161 lb	FT = 0%

LUMBER-
TOP CHORD 2x4 SP No.2
BOT CHORD 2x4 SP No.2
WEBS 2x4 SP No.3
OTHERS 2x4 SP No.3

BRACING-
TOP CHORD Structural wood sheathing directly applied.
BOT CHORD Rigid ceiling directly applied. Except:
1 Row at midpt 13-27
JOINTS 1 Brace at Jt(s): 23

MiTek recommends that Stabilizers and required cross bracing be installed during truss erection, in accordance with Stabilizer Installation guide.

REACTIONS. (lb/size) 3=909/0-8-0 (min. 0-1-8), 15=1354/0-8-0 (min. 0-1-10), 14=1262/0-8-0 (min. 0-1-12), 19=0/Mechanical, 20=0/Mechanical
Max Horz 3=-204(LC 10), 19=273(LC 4), 20=-297(LC 4)
Max Uplift3=-703(LC 4), 15=-974(LC 4), 14=-1250(LC 4)
Max Grav 3=991(LC 9), 15=1394(LC 9), 14=1487(LC 10)

FORCES. (lb) - Max. Comp./Max. Ten. - All forces 250 (lb) or less except when shown.
TOP CHORD 1-2=-253/247, 2-3=-251/263, 3-4=-1091/481, 4-5=-150/278, 5-30=-145/283, 6-30=-139/371, 6-7=-48/298, 7-31=-753/1127, 8-31=-761/992, 8-9=-765/976, 9-10=-1599/1724, 10-11=-283/314
BOT CHORD 3-18=-522/976, 17-18=-522/976, 16-17=-502/614, 15-16=-502/614, 14-15=-1324/1417, 13-14=-1324/1417, 12-13=-1324/1417, 10-12=-1324/1417
WEBS 4-18=0/277, 4-17=-1092/871, 6-17=-423/431, 7-17=-806/1025, 7-15=-1598/1351, 9-15=-618/875, 9-14=-1339/1206, 1-21=-184/274, 19-21=-184/273, 20-22=-234/297, 22-23=-234/297, 11-23=-234/297

NOTES- (10-11)
1) Unbalanced roof live loads have been considered for this design.
2) Wind: ASCE 7-16; Vult=175mph (3-second gust) Vasd=136mph; HVHZ; TCDL=5.0psf; BCDL=5.0psf; h=28ft; Cat. II; Exp C; Encl., GCpi=0.18; C-C Exterior(2E) -3-1-3 to 0-3-7, Interior(1) 0-3-7 to 8-9-1, Exterior(2R) 8-9-1 to 19-4-7, Interior(1) 19-4-7 to 28-1-8, Exterior(2E) 28-1-8 to 31-2-11; cantilever right exposed ; porch left exposed; Lumber DOL=1.60 plate grip DOL=1.60
3) Building Designer / Project engineer responsible for verifying applied roof live load shown covers rain loading requirements specific to the use of this truss component.
4) Provide adequate drainage to prevent water ponding.
5) All plates are 2x4 MT20 unless otherwise indicated.
6) This truss has been designed for a 10.0 psf bottom chord live load nonconcurrent with any other live loads.
7) Refer to girder(s) for truss to truss connections.
8) Provide mechanical connection (by others) of truss to bearing plate capable of withstanding 703 lb uplift at joint 3, 974 lb uplift at joint 15 and 1250 lb uplift at joint 14.
9) This truss design requires that a minimum of 7/16" structural wood sheathing be applied directly to the top chord and 1/2" gypsum sheetrock be applied directly to the bottom chord.
10) All truss to truss connection by TCI are on the Truss Placement plan.
11) ARMANDO R. PEREZ PE. # 28026 Ph: (305) 882-8826

LOAD CASE(S) Standard

Job	Truss	Truss Type	Qty	Ply	12715 ROLLING ROAD DR, PINECREST, FL.
12715	H6	Hip	1	1	Job Reference (optional)

Trusscorp Int., 9590 NW 89 AVE, Medley, FL — 8.820 s Dec 4 2024 MiTek Industries, Inc. Thu Jun 5 12:42:16 2025 Page 1

ID:_GLN6EJBZ1GCD23RDL_tAxzKvJz-PThP6YXXN5uk09a9CvOwNin_Pv6Ag44dDUfHtkz9LOL

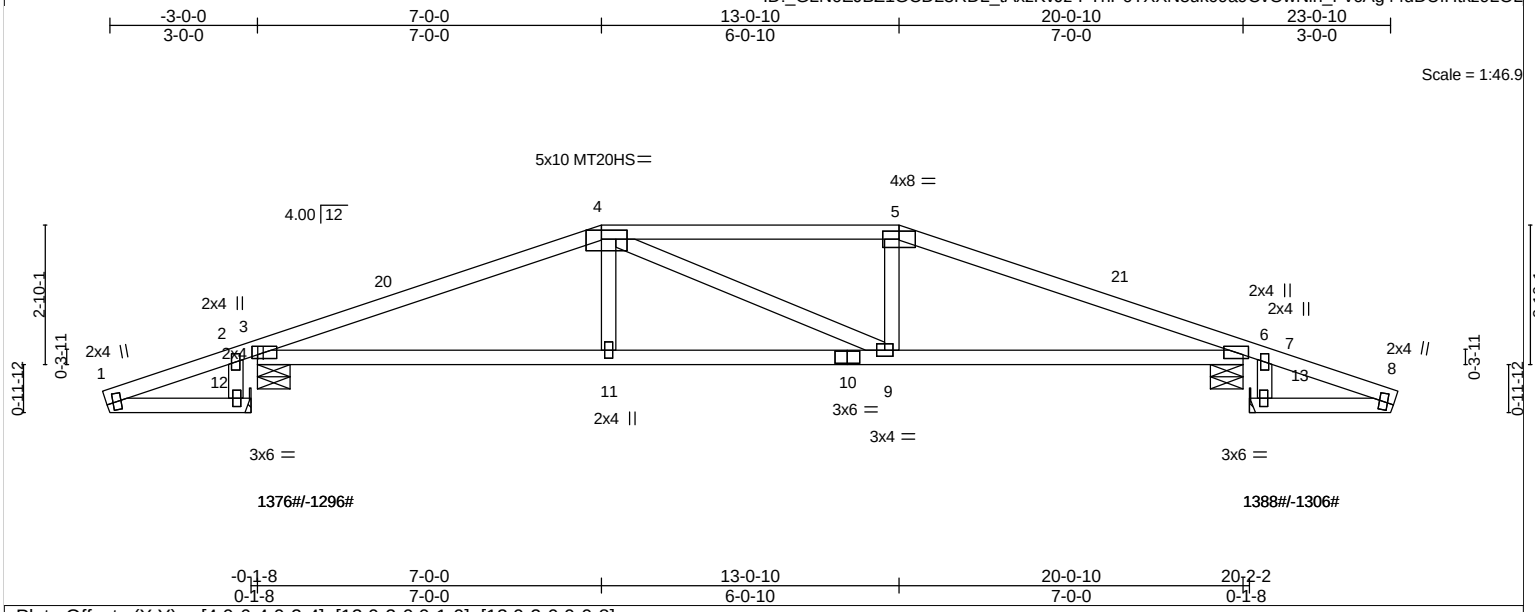

Plate Offsets (X,Y)-- [4:0-6-4,0-2-4], [12:0-2-0,0-1-0], [13:0-2-0,0-0-8]

LOADING (psf)		SPACING-	2-0-0	CSI.		DEFL.	in	(loc)	l/defl	L/d	PLATES	GRIP
TCLL	30.0	Plate Grip DOL	1.33	TC	0.97	Vert(LL)	0.17	9-11	>999	360	MT20	244/190
TCDL	15.0	Lumber DOL	1.33	BC	0.64	Vert(CT)	-0.23	9-11	>999	180	MT20HS	187/143
BCLL	0.0	Rep Stress Incr	YES	WB	0.18	Horz(CT)	0.06	6	n/a	n/a		
BCDL	10.0	Code FBC2020/TPI2014		Matrix-AS							Weight: 97 lb	FT = 0%

LUMBER-
TOP CHORD 2x4 SP No.2
BOT CHORD 2x4 SP No.2
WEBS 2x4 SP No.3
OTHERS 2x4 SP No.3

BRACING-
TOP CHORD Structural wood sheathing directly applied.
BOT CHORD Rigid ceiling directly applied.

MiTek recommends that Stabilizers and required cross bracing be installed during truss erection, in accordance with Stabilizer Installation guide.

REACTIONS. (lb/size) 3=1376/0-8-0 (min. 0-1-10), 12=-0/Mechanical, 13=-0/Mechanical, 6=1388/0-8-0 (min. 0-1-10)
Max Horz 3=212(LC 9), 12=308(LC 4), 13=-200(LC 4)
Max Uplift3=-1296(LC 4), 6=-1306(LC 4)
Max Grav 3=1376(LC 1), 6=1388(LC 1)

FORCES. (lb) - Max. Comp./Max. Ten. - All forces 250 (lb) or less except when shown.
TOP CHORD 1-2=-286/265, 2-3=-283/281, 3-20=-2168/1944, 4-20=-2063/1963, 4-5=-1936/1948, 5-21=-2035/1940, 6-21=-2144/1920
BOT CHORD 3-11=-1792/2038, 10-11=-1788/2045, 9-10=-1788/2045, 6-9=-1767/2011
WEBS 1-12=-203/308

NOTES- (10-11)
1) Unbalanced roof live loads have been considered for this design.
2) Wind: ASCE 7-16; Vult=175mph (3-second gust) Vasd=136mph; HVHZ; TCDL=5.0psf; BCDL=5.0psf; h=28ft; Cat. II; Exp C; Encl., GCpi=0.18; C-C Exterior(2E) -3-1-3 to 0-3-7, Interior(1) 0-3-7 to 2-9-1, Exterior(2R) 2-9-1 to 17-3-9, Interior(1) 17-3-9 to 20-0-10, Exterior(2E) 20-0-10 to 23-1-13; Lumber DOL=1.60 plate grip DOL=1.60
3) Building Designer / Project engineer responsible for verifying applied roof live load shown covers rain loading requirements specific to the use of this truss component.
4) Provide adequate drainage to prevent water ponding.
5) All plates are MT20 plates unless otherwise indicated.
6) This truss has been designed for a 10.0 psf bottom chord live load nonconcurrent with any other live loads.
7) Refer to girder(s) for truss to truss connections.
8) Provide mechanical connection (by others) of truss to bearing plate capable of withstanding 1296 lb uplift at joint 3 and 1306 lb uplift at joint 6.
9) This truss design requires that a minimum of 7/16" structural wood sheathing be applied directly to the top chord and 1/2" gypsum sheetrock be applied directly to the bottom chord.
10) All truss to truss connection by TCI are on the Truss Placement plan.
11) ARMANDO R. PEREZ PE. # 28026 Ph: (305) 882-8826

LOAD CASE(S) Standard

Job	Truss	Truss Type	Qty	Ply	12715 ROLLING ROAD DR, PINECREST, FL.
12715	H7	HIP	1	1	Job Reference (optional)

Trusscorp Int., 9590 NW 89 AVE, Medley, FL

8.820 s Dec 4 2024 MiTek Industries, Inc. Thu Jun 5 12:42:18 2025 Page 1
ID:_GLN6EJBZ1GCD23RDL_tAxzKvJz-LrpAWEYnvi8SFSkXKKROS7sN2jkK8zrwgo8Oycz9LOJ

-3-0-0	4-4-14	9-0-0	11-0-10	15-7-12	20-0-10	23-0-10
3-0-0	4-4-14	4-7-2	2-0-10	4-7-2	4-4-14	3-0-0

Scale = 1:44.1

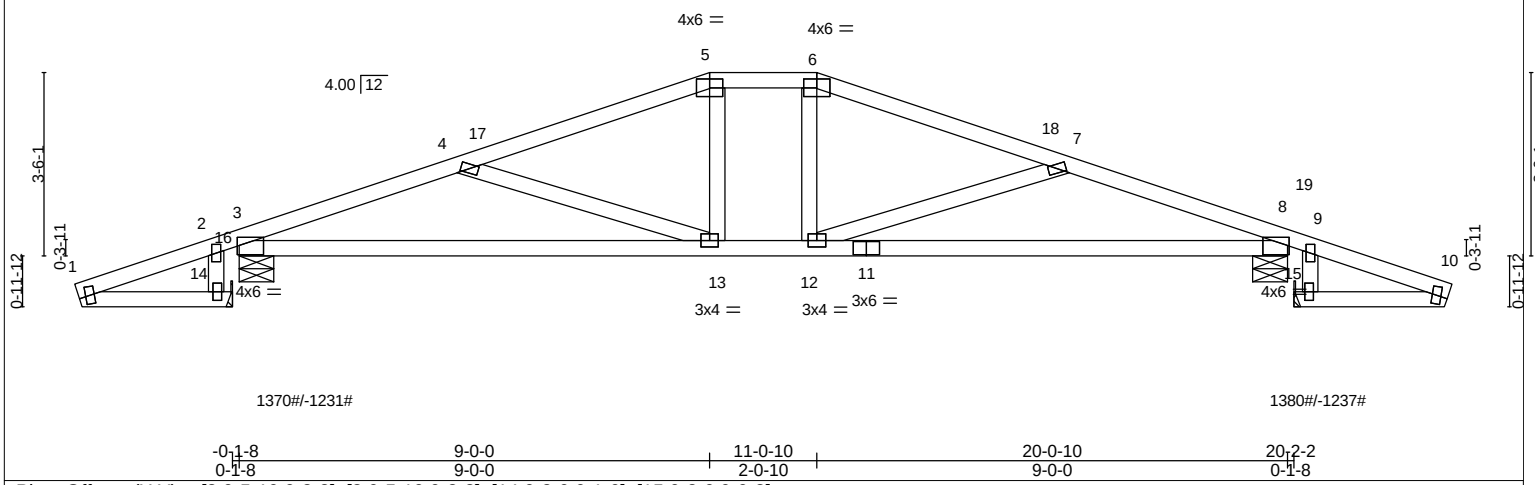

Plate Offsets (X,Y)-- [3:0-5-10,0-2-2], [8:0-5-10,0-2-2], [14:0-2-0,0-1-0], [15:0-2-0,0-0-8]

LOADING (psf)		**SPACING-**	2-0-0	**CSI.**		**DEFL.**	in	(loc)	l/defl	L/d	**PLATES**	**GRIP**
TCLL	30.0	Plate Grip DOL	1.33	TC	0.77	Vert(LL)	-0.16	3-13	>999	360	MT20	244/190
TCDL	15.0	Lumber DOL	1.33	BC	0.78	Vert(CT)	-0.35	3-13	>657	180		
BCLL	0.0	Rep Stress Incr	YES	WB	0.23	Horz(CT)	0.06	8	n/a	n/a		
BCDL	10.0	Code FBC2020/TPI2014		Matrix-S							Weight: 106 lb	FT = 0%

LUMBER-
TOP CHORD 2x4 SP No.2
BOT CHORD 2x4 SP No.2
WEBS 2x4 SP No.3
OTHERS 2x4 SP No.3

BRACING-
TOP CHORD Structural wood sheathing directly applied or 3-7-8 oc purlins.
BOT CHORD Rigid ceiling directly applied or 4-1-7 oc bracing.

MiTek recommends that Stabilizers and required cross bracing be installed during truss erection, in accordance with Stabilizer Installation guide.

REACTIONS. (lb/size) 3=1370/0-8-0 (min. 0-1-10), 14=0/Mechanical, 15=-0/Mechanical, 8=1380/0-8-0 (min. 0-1-10)
Max Horz 3=276(LC 9), 14=437(LC 4), 15=-346(LC 4)
Max Uplift3=-1231(LC 4), 8=-1237(LC 4)
Max Grav 3=1370(LC 1), 8=1380(LC 1)

FORCES. (lb) - Max. Comp./Max. Ten. - All forces 250 (lb) or less except when shown.
TOP CHORD 1-2=-406/331, 2-16=-310/255, 3-16=-310/251, 3-4=-2120/1901, 4-17=-1696/1498, 5-17=-1625/1511, 5-6=-1551/1529, 6-18=-1626/1510, 7-18=-1695/1497, 7-8=-2085/1868, 9-10=-321/256
BOT CHORD 3-13=-1915/2067, 12-13=-1434/1726, 11-12=-1877/2025, 8-11=-1877/2025
WEBS 4-13=-442/509, 7-12=-404/468, 1-14=-275/438, 10-15=-194/347

NOTES- (9-10)
1) Unbalanced roof live loads have been considered for this design.
2) Wind: ASCE 7-16; Vult=175mph (3-second gust) Vasd=136mph; HVHZ; TCDL=5.0psf; BCDL=5.0psf; h=28ft; Cat. II; Exp C; Encl., GCpi=0.18; C-C Exterior(2E) -3-1-3 to -0-1-3, Interior(1) -0-1-3 to 4-9-1, Exterior(2R) 4-9-1 to 15-3-9, Interior(1) 15-3-9 to 20-1-13, Exterior(2E) 20-1-13 to 23-1-13; Lumber DOL=1.60 plate grip DOL=1.60
3) Building Designer / Project engineer responsible for verifying applied roof live load shown covers rain loading requirements specific to the use of this truss component.
4) Provide adequate drainage to prevent water ponding.
5) All plates are 2x4 MT20 unless otherwise indicated.
6) This truss has been designed for a 10.0 psf bottom chord live load nonconcurrent with any other live loads.
7) Refer to girder(s) for truss to truss connections.
8) Provide mechanical connection (by others) of truss to bearing plate capable of withstanding 1231 lb uplift at joint 3 and 1237 lb uplift at joint 8.
9) All truss to truss connection by TCI are on the Truss Placement plan.
10) ARMANDO R. PEREZ PE. # 28026 Ph: (305) 882-8826

LOAD CASE(S) Standard

Job	Truss	Truss Type	Qty	Ply	12715 ROLLING ROAD DR, PINECREST, FL.
12715	H8A	HIP	1	1	Job Reference (optional)

Trusscorp Int., 9590 NW 89 AVE, Medley, FL

8.820 s Dec 4 2024 MiTek Industries, Inc. Thu Jun 5 12:42:19 2025 Page 1
ID:_GLN6EJBZ1GCD23RDL_tAxzKvJz-p2NYkaZPg0GJtcJku1yd?KPa263WtPG3vStxU3z9LOI

-3-0-0	4-4-14	9-0-0	11-0-10	15-7-12	20-0-10
3-0-0	4-4-14	4-7-2	2-0-10	4-7-2	4-4-14

Scale = 1:40.0

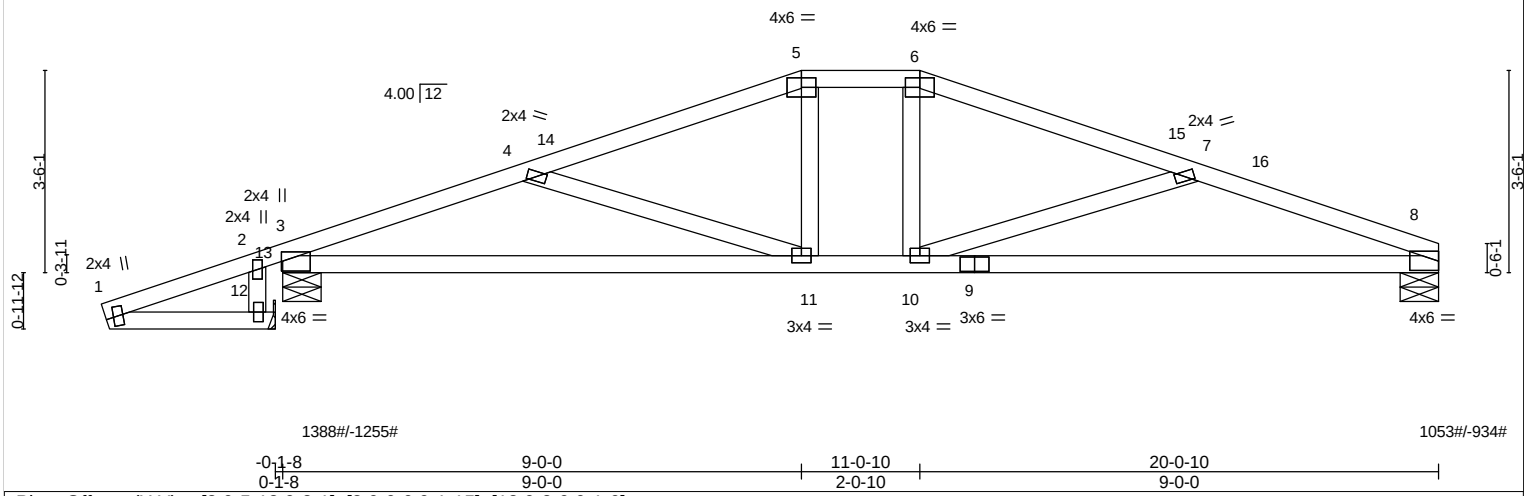

-0-1-8	9-0-0	11-0-10	20-0-10
0-1-8	9-0-0	2-0-10	9-0-0

Plate Offsets (X,Y)-- [3:0-5-12,0-2-1], [8:0-0-0,0-1-15], [12:0-2-0,0-1-0]

LOADING (psf)		**SPACING-**	2-0-0	**CSI.**		**DEFL.**	in	(loc)	l/defl	L/d	**PLATES**	**GRIP**
TCLL	30.0	Plate Grip DOL	1.33	TC	0.69	Vert(LL)	-0.18	8-10	>999	360	MT20	244/190
TCDL	15.0	Lumber DOL	1.33	BC	0.85	Vert(CT)	-0.40	8-10	>586	180		
BCLL	0.0	Rep Stress Incr	YES	WB	0.28	Horz(CT)	0.06	8	n/a	n/a		
BCDL	10.0	Code FBC2020/TPI2014		Matrix-S							Weight: 95 lb	FT = 0%

LUMBER-
TOP CHORD 2x4 SP No.2
BOT CHORD 2x4 SP No.2
WEBS 2x4 SP No.3
OTHERS 2x4 SP No.3

BRACING-
TOP CHORD Structural wood sheathing directly applied or 3-7-13 oc purlins.
BOT CHORD Rigid ceiling directly applied or 4-2-5 oc bracing.

MiTek recommends that Stabilizers and required cross bracing be installed during truss erection, in accordance with Stabilizer Installation guide.

REACTIONS. (lb/size) 8=1053/0-8-0 (min. 0-1-8), 3=1388/0-8-0 (min. 0-1-10), 12=-0/Mechanical
Max Horz 3=-376(LC 4), 12=441(LC 4)
Max Uplift8=-934(LC 4), 3=-1255(LC 4)
Max Grav 8=1053(LC 1), 3=1388(LC 1)

FORCES. (lb) - Max. Comp./Max. Ten. - All forces 250 (lb) or less except when shown.
TOP CHORD 1-2=-410/333, 2-13=-314/257, 3-13=-315/253, 3-4=-2172/1970, 4-14=-1758/1577, 5-14=-1687/1591, 5-6=-1610/1606, 6-15=-1685/1595, 7-15=-1761/1582, 7-16=-2147/2114, 8-16=-2253/2106
BOT CHORD 3-11=-1698/1939, 10-11=-1230/1610, 9-10=-1869/2050, 8-9=-1869/2050
WEBS 4-11=-434/495, 6-10=-146/272, 7-10=-545/678, 1-12=-277/442

NOTES- (8-9)
1) Unbalanced roof live loads have been considered for this design.
2) Wind: ASCE 7-16; Vult=175mph (3-second gust) Vasd=136mph; HVHZ; TCDL=5.0psf; BCDL=5.0psf; h=28ft; Cat. II; Exp C; Encl., GCpi=0.18; C-C Exterior(2E) -3-1-3 to -0-1-3, Interior(1) -0-1-3 to 4-9-1, Exterior(2R) 4-9-1 to 15-3-9, Interior(1) 15-3-9 to 16-8-10, Exterior(2E) 16-8-10 to 19-8-10; Lumber DOL=1.60 plate grip DOL=1.60
3) Building Designer / Project engineer responsible for verifying applied roof live load shown covers rain loading requirements specific to the use of this truss component.
4) Provide adequate drainage to prevent water ponding.
5) This truss has been designed for a 10.0 psf bottom chord live load nonconcurrent with any other live loads.
6) Refer to girder(s) for truss to truss connections.
7) Provide mechanical connection (by others) of truss to bearing plate capable of withstanding 934 lb uplift at joint 8 and 1255 lb uplift at joint 3.
8) All truss to truss connection by TCI are on the Truss Placement plan.
9) ARMANDO R. PEREZ PE. # 28026 Ph: (305) 882-8826

LOAD CASE(S) Standard

Job	Truss	Truss Type	Qty	Ply	12715 ROLLING ROAD DR, PINECREST, FL.
12715	H9T	HIP	1	1	Job Reference (optional)

Trusscorp Int., 9590 NW 89 AVE, Medley, FL

8.820 s Dec 4 2024 MiTek Industries, Inc. Thu Jun 5 12:42:21 2025 Page 1
ID:_GLN6EJBZ1GCD23RDL_tAxzKvJz-lQUI9FbfBdX16wS6?S_54lUtNwpALKsMNmM2Yxz9LOG

-3-0-0	3-4-4	7-0-0	9-11-10	13-7-6	16-11-10
3-0-0	3-4-4	3-7-12	2-11-10	3-7-12	3-4-4

Scale = 1:34.6

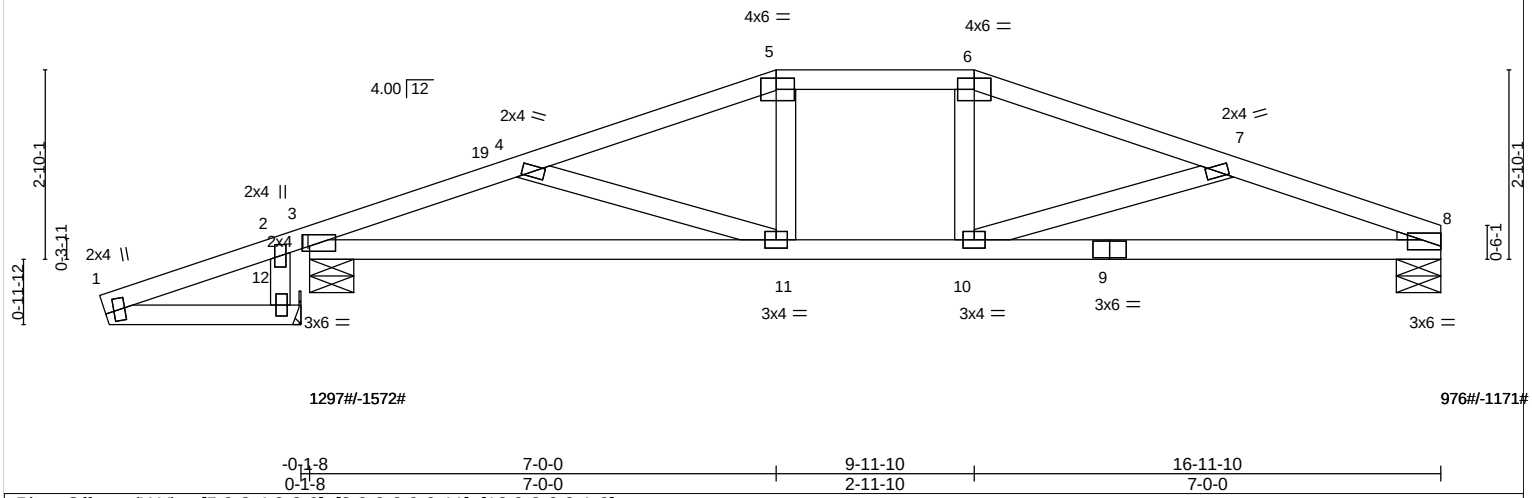

-0-1-8	7-0-0	9-11-10	16-11-10
0-1-8	7-0-0	2-11-10	7-0-0

Plate Offsets (X,Y)-- [5:0-3-4,0-2-0], [8:0-0-0,0-0-11], [12:0-2-0,0-1-0]

LOADING (psf)		**SPACING-**	2-0-0	**CSI.**		**DEFL.**	in	(loc)	l/defl	L/d	**PLATES**	**GRIP**
TCLL	30.0	Plate Grip DOL	1.33	TC	0.89	Vert(LL)	0.16	10-11	>999	360	MT20	244/190
TCDL	15.0	Lumber DOL	1.33	BC	0.58	Vert(CT)	-0.18	10-15	>999	180		
BCLL	0.0	Rep Stress Incr	YES	WB	0.21	Horz(CT)	-0.05	8	n/a	n/a		
BCDL	10.0	Code FBC2020/TPI2014		Matrix-AS							Weight: 81 lb	FT = 0%

LUMBER-
TOP CHORD 2x4 SP No.2 *Except*
T1: 2x4 SP No.1
BOT CHORD 2x4 SP No.2
WEBS 2x4 SP No.3
OTHERS 2x4 SP No.3
WEDGE
Right: 2x2 SP No.3

BRACING-
TOP CHORD Structural wood sheathing directly applied.
BOT CHORD Rigid ceiling directly applied.

MiTek recommends that Stabilizers and required cross bracing be installed during truss erection, in accordance with Stabilizer Installation guide.

REACTIONS. (lb/size) 8=923/0-8-0 (min. 0-1-8), 3=1222/0-8-0 (min. 0-1-8), 12=-0/Mechanical
Max Horz 3=-402(LC 4), 12=532(LC 4)
Max Uplift8=-1171(LC 4), 3=-1572(LC 4)
Max Grav 8=976(LC 5), 3=1297(LC 5)

FORCES. (lb) - Max. Comp./Max. Ten. - All forces 250 (lb) or less except when shown.
TOP CHORD 1-2=-494/321, 2-3=-496/338, 3-19=-2022/2466, 4-19=-1998/2474, 4-5=-1726/2104, 5-6=-1685/2117, 6-7=-1729/2110, 7-8=-2126/2668
BOT CHORD 3-11=-2187/1833, 10-11=-1743/1530, 9-10=-2405/1948, 8-9=-2405/1948
WEBS 4-11=-348/469, 7-10=-459/700, 1-12=-304/533

NOTES- (9-10)
1) Unbalanced roof live loads have been considered for this design.
2) Wind: ASCE 7-16; Vult=175mph (3-second gust) Vasd=136mph; HVHZ; TCDL=5.0psf; BCDL=5.0psf; h=28ft; Cat. II; Exp C; Part. Encl., GCpi=0.55; C-C Exterior(2E) -3-1-3 to 0-3-7, Interior(1) 0-3-7 to 2-9-1, Exterior(2R) 2-9-1 to 13-10-6, Exterior(2E) 13-10-6 to 16-11-10; Lumber DOL=1.60 plate grip DOL=1.60
3) Building Designer / Project engineer responsible for verifying applied roof live load shown covers rain loading requirements specific to the use of this truss component.
4) Provide adequate drainage to prevent water ponding.
5) This truss has been designed for a 10.0 psf bottom chord live load nonconcurrent with any other live loads.
6) Refer to girder(s) for truss to truss connections.
7) Provide mechanical connection (by others) of truss to bearing plate capable of withstanding 1171 lb uplift at joint 8 and 1572 lb uplift at joint 3.
8) This truss design requires that a minimum of 7/16" structural wood sheathing be applied directly to the top chord and 1/2" gypsum sheetrock be applied directly to the bottom chord.
9) All truss to truss connection by TCI are on the Truss Placement plan.
10) ARMANDO R. PEREZ PE. # 28026 Ph: (305) 882-8826

LOAD CASE(S) Standard

Job	Truss	Truss Type	Qty	Ply	12715 ROLLING ROAD DR, PINECREST, FL.
12715	H10	Half Hip	1	1	Job Reference (optional)

Trusscorp Int., 9590 NW 89 AVE, Medley, FL

8.820 s Dec 4 2024 MiTek Industries, Inc. Thu Jun 5 12:42:23 2025 Page 1
ID:_GLN6EJBZ1GCD23RDL_tAxzKvJz-ipc3axcwjEnlLEcV7t0Z9AZBAkPlp3Ufq4r9dqz9LOE

-3-0-0	-0-3-8	7-0-0	13-0-9	18-11-7	25-0-0
2-8-8	0-3-8	7-0-0	6-0-9	5-10-13	6-0-9

Scale: 1/4"=1'

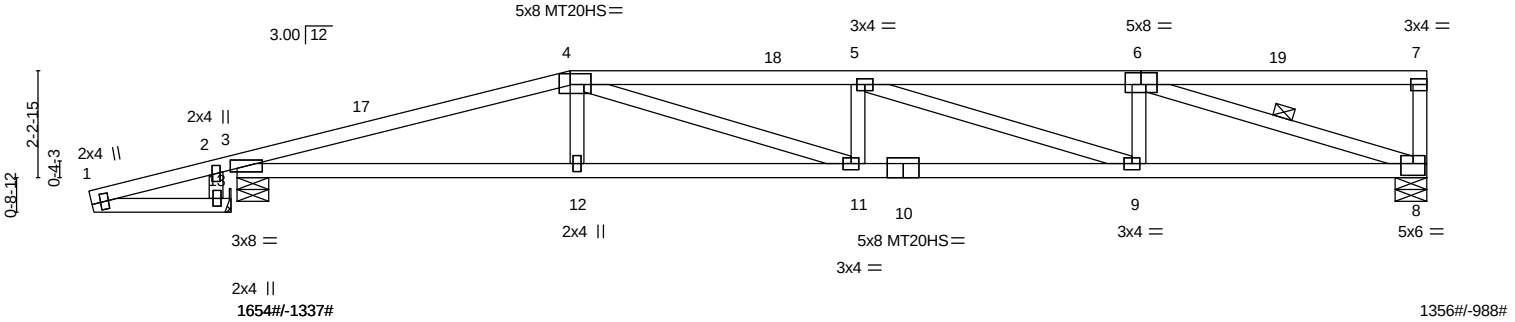

-0-1-8	7-0-0	13-0-9	18-11-7	25-0-0
0-1-8	7-0-0	6-0-9	5-10-13	6-0-9

Plate Offsets (X,Y)-- [4:0-5-4,0-2-12], [6:0-4-0,0-3-0], [7:Edge,0-1-8], [8:0-3-0,0-3-0], [13:0-2-0,0-1-0]

LOADING (psf)		**SPACING-**	2-0-0	**CSI.**		**DEFL.**	in	(loc)	l/defl	L/d	**PLATES**	**GRIP**
TCLL	30.0	Plate Grip DOL	1.33	TC	1.00	Vert(LL)	0.43	11-12	>702	360	MT20	244/190
TCDL	15.0	Lumber DOL	1.33	BC	0.96	Vert(CT)	-0.66	11-12	>450	180	MT20HS	187/143
BCLL	0.0	Rep Stress Incr	YES	WB	0.90	Horz(CT)	0.14	8	n/a	n/a		
BCDL	10.0	Code FBC2020/TPI2014		Matrix-AS							Weight: 121 lb	FT = 0%

LUMBER-
TOP CHORD 2x4 SP No.2 *Except*
T1: 2x4 SP No.1
BOT CHORD 2x4 SP No.1 *Except*
B2: 2x4 SP No.2
WEBS 2x4 SP No.3
OTHERS 2x4 SP No.3

BRACING-
TOP CHORD Structural wood sheathing directly applied, except end verticals.
BOT CHORD Rigid ceiling directly applied.
WEBS 1 Row at midpt 6-8

MiTek recommends that Stabilizers and required cross bracing be installed during truss erection, in accordance with Stabilizer Installation guide.

REACTIONS. (lb/size) 8=1356/0-8-0 (min. 0-1-10), 3=1654/0-8-0 (min. 0-1-15), 13=0/Mechanical
Max Horz 3=220(LC 1), 13=299(LC 4)
Max Uplift8=-988(LC 4), 3=-1337(LC 4)
Max Grav 8=1356(LC 1), 3=1654(LC 1)

FORCES. (lb) - Max. Comp./Max. Ten. - All forces 250 (lb) or less except when shown.
TOP CHORD 1-2=-285/268, 2-3=-284/281, 3-17=-3676/2722, 4-17=-3589/2737, 4-18=-4409/3258, 5-18=-4409/3258, 5-6=-3238/2310, 7-8=-254/265
BOT CHORD 3-12=-2727/3481, 11-12=-2719/3487, 10-11=-3258/4409, 9-10=-3258/4409, 8-9=-2305/3226
WEBS 4-11=-566/1193, 5-9=-1234/998, 6-9=-233/491, 6-8=-3261/2326, 1-13=-220/300

NOTES- (10-11)
1) Unbalanced roof live loads have been considered for this design.
2) Wind: ASCE 7-16; Vult=175mph (3-second gust) Vasd=136mph; HVHZ; TCDL=5.0psf; BCDL=5.0psf; h=28ft; Cat. II; Exp C; Encl., GCpi=0.18; C-C Exterior(2E) -3-0-15 to 0-0-0, Interior(1) 0-0-0 to 2-9-1, Exterior(2R) 2-9-1 to 11-2-15, Interior(1) 11-2-15 to 21-10-4, Exterior(2E) 21-10-4 to 24-10-4; Lumber DOL=1.60 plate grip DOL=1.60
3) Building Designer / Project engineer responsible for verifying applied roof live load shown covers rain loading requirements specific to the use of this truss component.
4) Provide adequate drainage to prevent water ponding.
5) All plates are MT20 plates unless otherwise indicated.
6) This truss has been designed for a 10.0 psf bottom chord live load nonconcurrent with any other live loads.
7) Refer to girder(s) for truss to truss connections.
8) Provide mechanical connection (by others) of truss to bearing plate capable of withstanding 988 lb uplift at joint 8 and 1337 lb uplift at joint 3.
9) This truss design requires that a minimum of 7/16" structural wood sheathing be applied directly to the top chord and 1/2" gypsum sheetrock be applied directly to the bottom chord.
10) All truss to truss connection by TCI are on the Truss Placement plan.
11) ARMANDO R. PEREZ PE. # 28026 Ph: (305) 882-8826

LOAD CASE(S) Standard

Job	Truss	Truss Type	Qty	Ply	12715 ROLLING ROAD DR, PINECREST, FL.
12715	H10T	HIP	1	1	Job Reference (optional)

Trusscorp Int., 9590 NW 89 AVE, Medley, FL

8.820 s Dec 4 2024 MiTek Industries, Inc. Thu Jun 5 12:42:24 2025 Page 1
ID:_GLN6EJBZ1GCD23RDL_tAxzKvJz-A?ARnHdYUYvczNBhgaYoiO6MK7lqYYlo3jbi9Gz9LOD

-3-0-0	3-8-5	7-0-0	12-6-0	18-0-0	21-3-11	25-0-0	28-0-0
3-0-0	3-8-5	3-3-11	5-6-0	5-6-0	3-3-11	3-8-5	3-0-0

Scale = 1:55.1

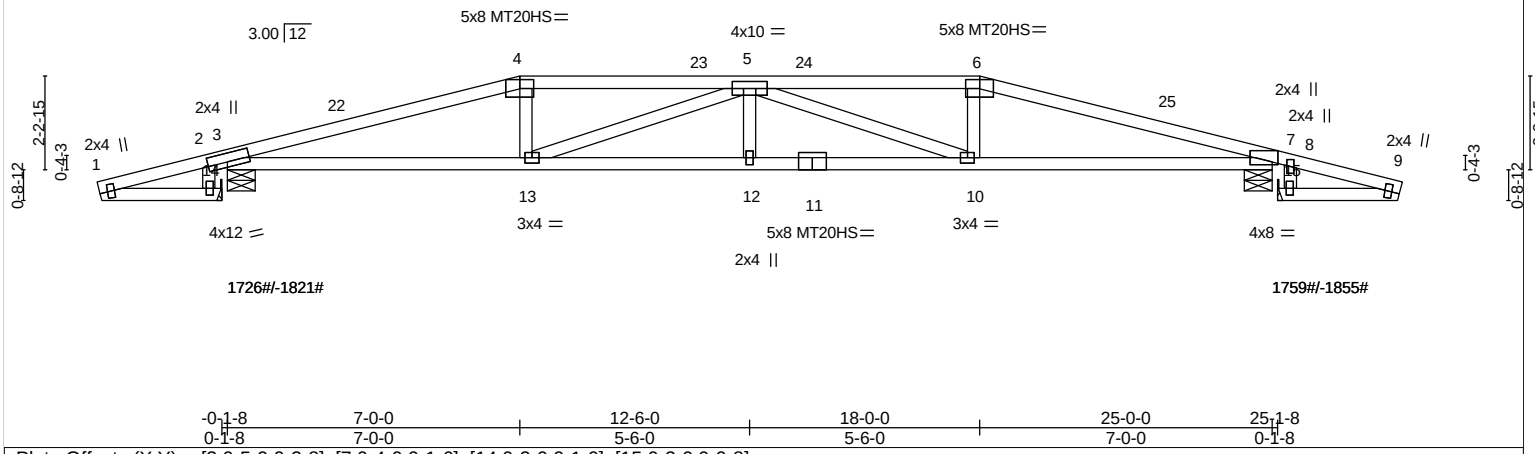

-0-1-8	7-0-0	12-6-0	18-0-0	25-0-0	25-1-8
0-1-8	7-0-0	5-6-0	5-6-0	7-0-0	0-1-8

Plate Offsets (X,Y)-- [3:0-5-9,0-2-8], [7:0-4-0,0-1-6], [14:0-2-0,0-1-0], [15:0-2-0,0-0-8]

LOADING (psf)		**SPACING-**	2-0-0	**CSI.**		**DEFL.**	in	(loc)	l/defl	L/d	**PLATES**	**GRIP**
TCLL	30.0	Plate Grip DOL	1.33	TC	0.98	Vert(LL)	0.53	10-12	>562	360	MT20	244/190
TCDL	15.0	Lumber DOL	1.33	BC	0.91	Vert(CT)	-0.62	10-12	>487	180	MT20HS	187/143
BCLL	0.0	Rep Stress Incr	YES	WB	0.77	Horz(CT)	0.13	7	n/a	n/a		
BCDL	10.0	Code FBC2020/TPI2014		Matrix-AS							Weight: 118 lb	FT = 0%

LUMBER-
TOP CHORD 2x4 SP 2400F 2.0E *Except*
T2: 2x4 SP No.2
BOT CHORD 2x4 SP No.2 *Except*
B2: 2x4 SP No.1
WEBS 2x4 SP No.3
OTHERS 2x4 SP No.3

BRACING-
TOP CHORD Structural wood sheathing directly applied.
BOT CHORD Rigid ceiling directly applied.

MiTek recommends that Stabilizers and required cross bracing be installed during truss erection, in accordance with Stabilizer Installation guide.

REACTIONS. (lb/size) 3=1636/0-8-0 (min. 0-2-1), 14=-0/Mechanical, 15=0/Mechanical, 7=1668/0-8-0 (min. 0-2-1)
Max Horz 3=612(LC 9), 14=355(LC 4), 15=-417(LC 9)
Max Uplift3=-1821(LC 4), 7=-1855(LC 4)
Max Grav 3=1726(LC 5), 7=1759(LC 5)

FORCES. (lb) - Max. Comp./Max. Ten. - All forces 250 (lb) or less except when shown.
TOP CHORD 1-2=-338/244, 2-3=-337/256, 3-22=-3733/3769, 4-22=-3703/3783, 4-23=-3666/3775, 5-23=-3666/3775, 5-24=-3528/3634, 6-24=-3528/3634, 6-25=-3567/3646, 7-25=-3599/3632, 7-8=-385/223, 8-9=-397/219
BOT CHORD 3-13=-3195/3116, 12-13=-4146/4058, 11-12=-4146/4058, 10-11=-4146/4058, 7-10=-3054/2978
WEBS 4-13=-228/459, 5-13=-1129/994, 5-10=-1257/1144, 6-10=-236/466, 1-14=-210/355, 9-15=-223/418

NOTES- (10-11)
1) Unbalanced roof live loads have been considered for this design.
2) Wind: ASCE 7-16; Vult=175mph (3-second gust) Vasd=136mph; HVHZ; TCDL=5.0psf; BCDL=5.0psf; h=28ft; Cat. II; Exp C; Part. Encl., GCpi=0.55; C-C Exterior(2E) -3-0-15 to 0-0-0, Interior(1) 0-0-0 to 2-9-1, Exterior(2R) 2-9-1 to 11-2-15, Interior(1) 11-2-15 to 13-9-1, Exterior(2R) 13-9-1 to 22-2-15, Interior(1) 22-2-15 to 25-0-0, Exterior(2E) 25-0-0 to 28-0-15; Lumber DOL=1.60 plate grip DOL=1.60
3) Building Designer / Project engineer responsible for verifying applied roof live load shown covers rain loading requirements specific to the use of this truss component.
4) Provide adequate drainage to prevent water ponding.
5) All plates are MT20 plates unless otherwise indicated.
6) This truss has been designed for a 10.0 psf bottom chord live load nonconcurrent with any other live loads.
7) Refer to girder(s) for truss to truss connections.
8) Provide mechanical connection (by others) of truss to bearing plate capable of withstanding 1821 lb uplift at joint 3 and 1855 lb uplift at joint 7.
9) This truss design requires that a minimum of 7/16" structural wood sheathing be applied directly to the top chord and 1/2" gypsum sheetrock be applied directly to the bottom chord.
10) All truss to truss connection by TCI are on the Truss Placement plan.
11) ARMANDO R. PEREZ PE. # 28026 Ph: (305) 882-8826

LOAD CASE(S) Standard

Job	Truss	Truss Type	Qty	Ply	12715 ROLLING ROAD DR, PINECREST, FL.
12715	H11	HALF HIP	1	1	Job Reference (optional)

Trusscorp Int., 9590 NW 89 AVE, Medley, FL

8.820 s Dec 4 2024 MiTek Industries, Inc. Thu Jun 5 12:42:26 2025 Page 1
ID:_GLN6EJBZ1GCD23RDL_tAxzKvJz-6OIBCzeo099KChL4o?aGnpBl9xTy0UU5W14pE9z9LOB

-3-0-0	5-0-7	9-0-0	14-4-9	19-7-7	25-0-0
3-0-0	5-0-7	3-11-9	5-4-9	5-2-13	5-4-9

Scale = 1:48.5

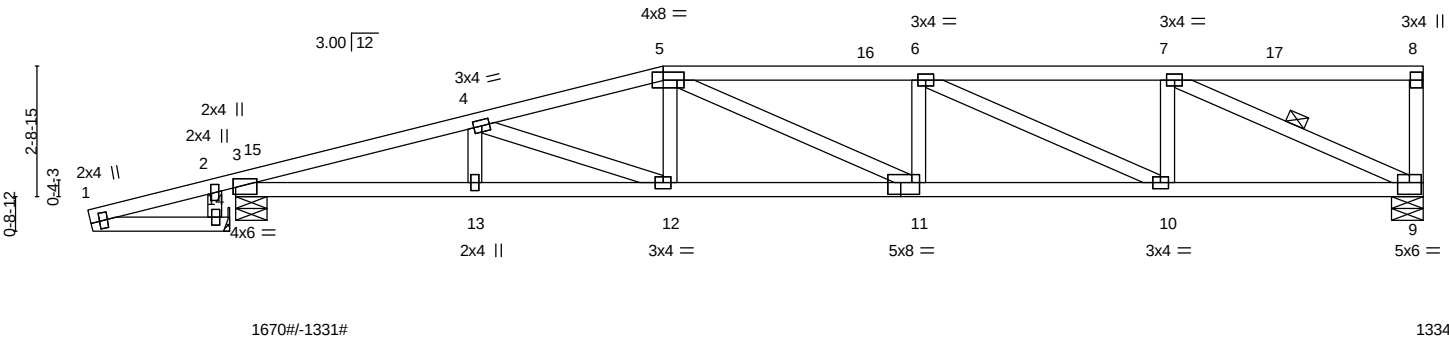

-0-1-8	5-0-7	9-0-0	14-4-9	19-7-7	25-0-0
0-1-8	5-0-7	3-11-9	5-4-9	5-2-13	5-4-9

Plate Offsets (X,Y)-- [3:0-3-0,0-2-6], [5:0-5-4,0-2-0], [9:0-3-0,0-3-0], [11:0-3-4,0-3-0], [14:0-2-0,0-1-0]

LOADING (psf)		**SPACING-**	2-0-0	**CSI.**		**DEFL.**	in	(loc)	l/defl	L/d	**PLATES**	**GRIP**
TCLL	30.0	Plate Grip DOL	1.33	TC	0.83	Vert(LL)	0.29	11-12	>999	360	MT20	244/190
TCDL	15.0	Lumber DOL	1.33	BC	0.80	Vert(CT)	-0.44	11-12	>665	180		
BCLL	0.0	Rep Stress Incr	YES	WB	0.70	Horz(CT)	0.12	9	n/a	n/a		
BCDL	10.0	Code FBC2020/TPI2014		Matrix-S							Weight: 129 lb	FT = 0%

LUMBER-
TOP CHORD 2x4 SP No.2
BOT CHORD 2x4 SP No.2
WEBS 2x4 SP No.3
OTHERS 2x4 SP No.3

BRACING-
TOP CHORD Structural wood sheathing directly applied or 2-4-8 oc purlins, except end verticals.
BOT CHORD Rigid ceiling directly applied or 3-5-15 oc bracing.
WEBS 1 Row at midpt 7-9

MiTek recommends that Stabilizers and required cross bracing be installed during truss erection, in accordance with Stabilizer Installation guide.

REACTIONS. (lb/size) 9=1334/0-8-0 (min. 0-1-9), 3=1670/0-8-0 (min. 0-2-0), 14=-0/Mechanical
Max Horz 3=227(LC 1), 14=353(LC 4)
Max Uplift9=-991(LC 4), 3=-1331(LC 4)
Max Grav 9=1334(LC 1), 3=1670(LC 1)

FORCES. (lb) - Max. Comp./Max. Ten. - All forces 250 (lb) or less except when shown.
TOP CHORD 1-2=-336/275, 2-15=-250/198, 3-15=-251/192, 3-4=-3539/2578, 4-5=-3173/2423, 5-16=-3328/2518, 6-16=-3327/2518, 6-7=-2329/1701
BOT CHORD 3-13=-2624/3307, 12-13=-2624/3307, 11-12=-2409/3052, 10-11=-2518/3327, 9-10=-1701/2329
WEBS 4-12=-284/232, 5-12=-58/271, 5-11=-119/521, 6-10=-1102/902, 7-10=-319/571, 7-9=-2512/1832, 1-14=-228/353

NOTES- (8-9)
1) Unbalanced roof live loads have been considered for this design.
2) Wind: ASCE 7-16; Vult=175mph (3-second gust) Vasd=136mph; HVHZ; TCDL=5.0psf; BCDL=5.0psf; h=28ft; Cat. II; Exp C; Encl., GCpi=0.18; C-C Exterior(2E) -3-0-15 to -0-0-15, Interior(1) -0-0-15 to 4-9-1, Exterior(2R) 4-9-1 to 13-2-15, Interior(1) 13-2-15 to 21-10-4, Exterior(2E) 21-10-4 to 24-10-4; Lumber DOL=1.60 plate grip DOL=1.60
3) Building Designer / Project engineer responsible for verifying applied roof live load shown covers rain loading requirements specific to the use of this truss component.
4) Provide adequate drainage to prevent water ponding.
5) This truss has been designed for a 10.0 psf bottom chord live load nonconcurrent with any other live loads.
6) Refer to girder(s) for truss to truss connections.
7) Provide mechanical connection (by others) of truss to bearing plate capable of withstanding 991 lb uplift at joint 9 and 1331 lb uplift at joint 3.
8) All truss to truss connection by TCI are on the Truss Placement plan.
9) ARMANDO R. PEREZ PE. # 28026 Ph: (305) 882-8826

LOAD CASE(S) Standard

Job	Truss	Truss Type	Qty	Ply	12715 ROLLING ROAD DR, PINECREST, FL.
12715	H11T	HIP	1	1	Job Reference (optional)

Trusscorp Int., 9590 NW 89 AVE, Medley, FL

8.820 s Dec 4 2024 MiTek Industries, Inc. Thu Jun 5 12:42:28 2025 Page 1
ID:_GLN6EJBZ1GCD23RDL_tAxzKvJz-2mPydeg2YnP1S?VSvQcksEG28l7CUWMO_LZwI1z9LO9

-3-0-0	5-0-7	9-0-0	12-6-0	16-0-0	19-11-9	25-0-0	28-0-0
3-0-0	5-0-7	3-11-9	3-6-0	3-6-0	3-11-9	5-0-7	3-0-0

Scale = 1:55.1

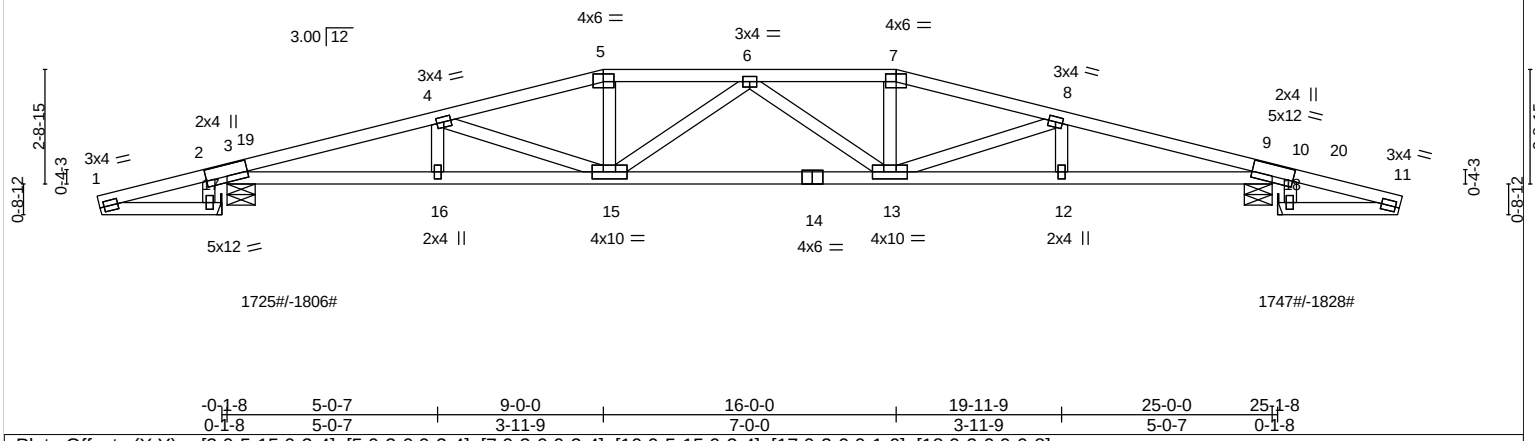

-0-1-8	5-0-7	9-0-0	16-0-0	19-11-9	25-0-0	25-1-8
0-1-8	5-0-7	3-11-9	7-0-0	3-11-9	5-0-7	0-1-8

Plate Offsets (X,Y)-- [3:0-5-15,0-3-4], [5:0-3-0,0-2-4], [7:0-3-0,0-2-4], [10:0-5-15,0-3-4], [17:0-2-0,0-1-0], [18:0-2-0,0-0-8]

LOADING (psf)		**SPACING-**	2-0-0	**CSI.**		**DEFL.**	in	(loc)	l/defl	L/d	**PLATES**	**GRIP**
TCLL	30.0	Plate Grip DOL	1.33	TC	0.99	Vert(LL)	0.36	13-15	>815	360	MT20	244/190
TCDL	15.0	Lumber DOL	1.33	BC	0.94	Vert(CT)	-0.45	13-15	>652	180		
BCLL	0.0	Rep Stress Incr	YES	WB	0.16	Horz(CT)	0.12	9	n/a	n/a		
BCDL	10.0	Code FBC2020/TPI2014		Matrix-S							Weight: 128 lb	FT = 0%

LUMBER-
TOP CHORD 2x4 SP No.1 *Except*
T2: 2x4 SP No.2
BOT CHORD 2x4 SP No.2
WEBS 2x4 SP No.3
OTHERS 2x4 SP No.3

BRACING-
TOP CHORD Structural wood sheathing directly applied.
BOT CHORD Rigid ceiling directly applied or 2-2-0 oc bracing.

MiTek recommends that Stabilizers and required cross bracing be installed during truss erection, in accordance with Stabilizer Installation guide.

REACTIONS. (lb/size) 3=1634/0-8-0 (min. 0-2-1), 17=-0/Mechanical, 18=-0/Mechanical, 9=1656/0-8-0 (min. 0-2-1)
Max Horz 3=533(LC 9), 17=430(LC 4), 18=-288(LC 9)
Max Uplift3=-1806(LC 4), 9=-1828(LC 4)
Max Grav 3=1725(LC 5), 9=1747(LC 5)

FORCES. (lb) - Max. Comp./Max. Ten. - All forces 250 (lb) or less except when shown.
TOP CHORD 1-2=-410/291, 2-19=-300/215, 3-19=-300/209, 3-4=-3563/3560, 4-5=-3208/3302, 5-6=-3156/3287, 6-7=-3130/3261, 7-8=-3177/3272, 8-9=-3412/3403, 9-20=-298/81, 10-20=-296/81, 10-11=-273/0
BOT CHORD 3-16=-3258/3162, 15-16=-3258/3162, 14-15=-3249/3053, 13-14=-3249/3053, 12-13=-3093/3004, 9-12=-3093/3004
WEBS 4-15=-373/359, 5-15=-311/419, 6-15=-418/385, 6-13=-445/418, 7-13=-289/398, 1-17=-248/431, 11-18=0/289

NOTES- (8-9)
1) Unbalanced roof live loads have been considered for this design.
2) Wind: ASCE 7-16; Vult=175mph (3-second gust) Vasd=136mph; HVHZ; TCDL=5.0psf; BCDL=5.0psf; h=28ft; Cat. II; Exp C; Part. Encl., GCpi=0.55; C-C Exterior(2E) -3-0-15 to -0-0-15, Interior(1) -0-0-15 to 4-9-1, Exterior(2R) 4-9-1 to 19-11-9, Interior(1) 19-11-9 to 25-0-15, Exterior(2E) 25-0-15 to 28-0-15; Lumber DOL=1.60 plate grip DOL=1.60
3) Building Designer / Project engineer responsible for verifying applied roof live load shown covers rain loading requirements specific to the use of this truss component.
4) Provide adequate drainage to prevent water ponding.
5) This truss has been designed for a 10.0 psf bottom chord live load nonconcurrent with any other live loads.
6) Refer to girder(s) for truss to truss connections.
7) Provide mechanical connection (by others) of truss to bearing plate capable of withstanding 1806 lb uplift at joint 3 and 1828 lb uplift at joint 9.
8) All truss to truss connection by TCI are on the Truss Placement plan.
9) ARMANDO R. PEREZ PE. # 28026 Ph: (305) 882-8826

LOAD CASE(S) Standard

Job	Truss	Truss Type	Qty	Ply	12715 ROLLING ROAD DR, PINECREST, FL.
12715	H12	Hip	1	1	Job Reference (optional)

Trusscorp Int., 9590 NW 89 AVE, Medley, FL

8.820 s Dec 4 2024 MiTek Industries, Inc. Thu Jun 5 12:42:30 2025 Page 1
ID:_GLN6EJBZ1GCD23RDL_tAxzKvJz-_9Xi2KiJ4OflhIer1reCyfMO2Yn1yJlhRf21Nwz9LO7

-3-0-0	6-0-13	11-0-0	14-0-0	18-11-3	25-0-0
3-0-0	6-0-13	4-11-3	3-0-0	4-11-3	6-0-13

Scale: 1/4"=1'

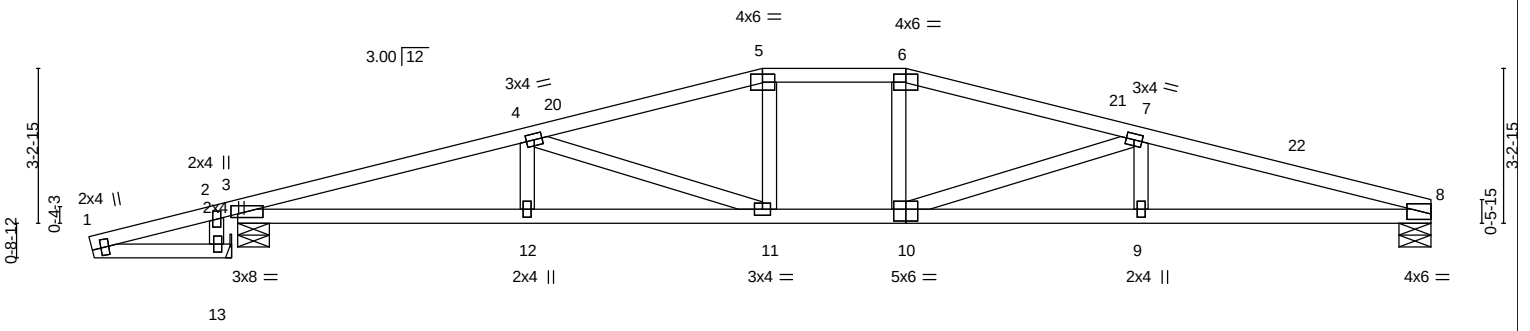

-0-1-8	6-0-13	11-0-0	14-0-0	18-11-3	25-0-0
0-1-8	6-0-13	4-11-3	3-0-0	4-11-3	6-0-13

Plate Offsets (X,Y)-- [10:0-3-0,0-3-0], [13:0-2-0,0-1-0]

LOADING (psf)		**SPACING-**	2-0-0	**CSI.**		**DEFL.**	in	(loc)	l/defl	L/d	**PLATES**	**GRIP**
TCLL	30.0	Plate Grip DOL	1.33	TC	0.96	Vert(LL)	0.36	9-10	>832	360	MT20	244/190
TCDL	15.0	Lumber DOL	1.33	BC	0.98	Vert(CT)	-0.54	9-10	>558	180		
BCLL	0.0	Rep Stress Incr	YES	WB	0.55	Horz(CT)	0.12	8	n/a	n/a		
BCDL	10.0	Code FBC2020/TPI2014		Matrix-AS							Weight: 112 lb	FT = 0%

LUMBER-
TOP CHORD 2x4 SP No.2
BOT CHORD 2x4 SP No.2 *Except*
B1: 2x4 SP No.1
WEBS 2x4 SP No.3
OTHERS 2x4 SP No.3

BRACING-
TOP CHORD Structural wood sheathing directly applied.
BOT CHORD Rigid ceiling directly applied.

MiTek recommends that Stabilizers and required cross bracing be installed during truss erection, in accordance with Stabilizer Installation guide.

REACTIONS. (lb/size) 8=1366/0-8-0 (min. 0-1-10), 3=1661/0-8-0 (min. 0-1-15), 13=-0/Mechanical
Max Horz 3=-290(LC 4), 13=361(LC 4)
Max Uplift8=-1065(LC 4), 3=-1341(LC 4)
Max Grav 8=1366(LC 1), 3=1661(LC 1)

FORCES. (lb) - Max. Comp./Max. Ten. - All forces 250 (lb) or less except when shown.
TOP CHORD 1-2=-344/306, 2-3=-344/319, 3-4=-3749/2872, 4-20=-3006/2454, 5-20=-2954/2464, 5-6=-2882/2464, 6-21=-2972/2476, 7-21=-3026/2465, 7-22=-3782/3008, 8-22=-3855/2996
BOT CHORD 3-12=-2681/3561, 11-12=-2681/3561, 10-11=-2175/2882, 9-10=-2820/3669, 8-9=-2820/3669
WEBS 4-11=-910/543, 5-11=-177/353, 6-10=-200/369, 7-10=-999/683, 1-13=-261/362

NOTES- (9-10)
1) Unbalanced roof live loads have been considered for this design.
2) Wind: ASCE 7-16; Vult=175mph (3-second gust) Vasd=136mph; HVHZ; TCDL=5.0psf; BCDL=5.0psf; h=28ft; Cat. II; Exp C; Encl., GCpi=0.18; C-C Exterior(2E) -3-0-15 to 0-0-0, Interior(1) 0-0-0 to 6-9-1, Exterior(2R) 6-9-1 to 18-2-15, Interior(1) 18-2-15 to 22-0-0, Exterior(2E) 22-0-0 to 25-0-0; Lumber DOL=1.60 plate grip DOL=1.60
3) Building Designer / Project engineer responsible for verifying applied roof live load shown covers rain loading requirements specific to the use of this truss component.
4) Provide adequate drainage to prevent water ponding.
5) This truss has been designed for a 10.0 psf bottom chord live load nonconcurrent with any other live loads.
6) Refer to girder(s) for truss to truss connections.
7) Provide mechanical connection (by others) of truss to bearing plate capable of withstanding 1065 lb uplift at joint 8 and 1341 lb uplift at joint 3.
8) This truss design requires that a minimum of 7/16" structural wood sheathing be applied directly to the top chord and 1/2" gypsum sheetrock be applied directly to the bottom chord.
9) All truss to truss connection by TCI are on the Truss Placement plan.
10) ARMANDO R. PEREZ PE. # 28026 Ph: (305) 882-8826

LOAD CASE(S) Standard

Job	Truss	Truss Type	Qty	Ply	12715 ROLLING ROAD DR, PINECREST, FL.
12715	H12T	HIP	1	1	Job Reference (optional)

Trusscorp Int., 9590 NW 89 AVE, Medley, FL

8.820 s Dec 4 2024 MiTek Industries, Inc. Thu Jun 5 12:42:32 2025 Page 1
ID:_GLN6EJBZ1GCD23RDL_tAxzKvJz-xYfTS0jZc?vTxcoE8Ghg14RjAMVPQEx_vzX7Roz9LO5

-3-0-0	6-0-13	11-0-0	14-0-0	18-11-3	25-0-0	28-0-0
3-0-0	6-0-13	4-11-3	3-0-0	4-11-3	6-0-13	3-0-0

Scale = 1:55.1

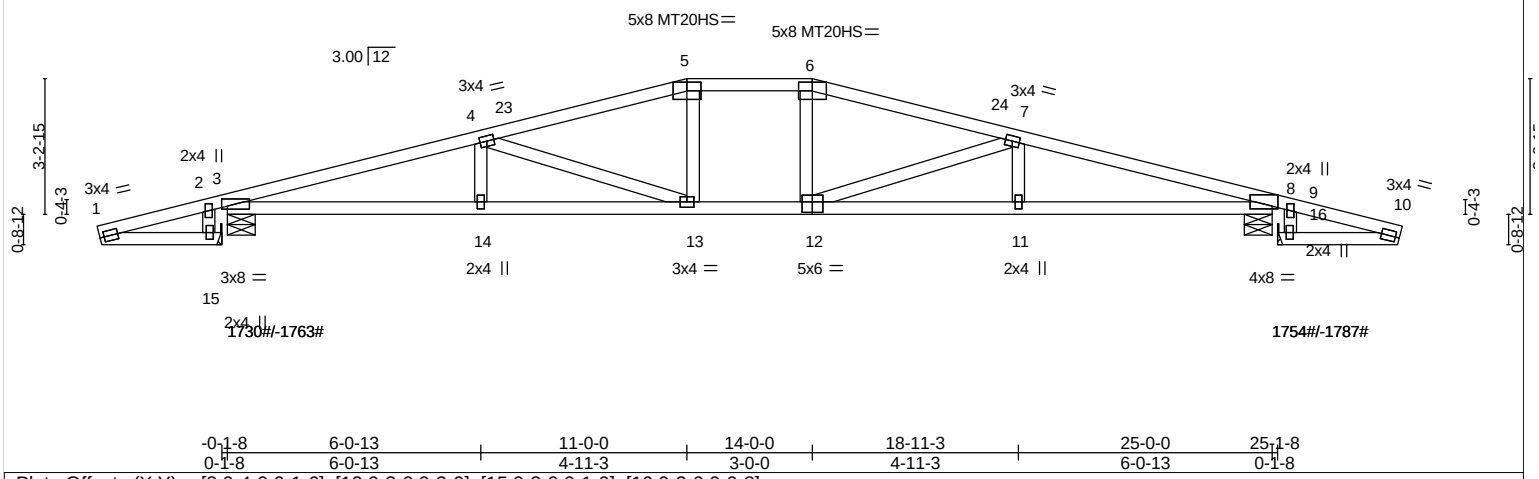

-0-1-8	6-0-13	11-0-0	14-0-0	18-11-3	25-0-0	25-1-8
0-1-8	6-0-13	4-11-3	3-0-0	4-11-3	6-0-13	0-1-8

Plate Offsets (X,Y)-- [8:0-4-0,0-1-6], [12:0-3-0,0-3-0], [15:0-2-0,0-1-0], [16:0-2-0,0-0-8]

LOADING (psf)		**SPACING-**	2-0-0	**CSI.**		**DEFL.**	in	(loc)	l/defl	L/d	**PLATES**	**GRIP**
TCLL	30.0	Plate Grip DOL	1.33	TC	0.98	Vert(LL)	0.41	13-14	>740	360	MT20	244/190
TCDL	15.0	Lumber DOL	1.33	BC	0.86	Vert(CT)	-0.48	13-14	>627	180	MT20HS	187/143
BCLL	0.0	Rep Stress Incr	YES	WB	0.51	Horz(CT)	0.10	8	n/a	n/a		
BCDL	10.0	Code FBC2020/TPI2014		Matrix-AS							Weight: 122 lb	FT = 0%

LUMBER-
TOP CHORD 2x4 SP No.1 *Except*
T2: 2x4 SP No.2
BOT CHORD 2x4 SP No.1 *Except*
B2: 2x4 SP 2400F 2.0E
WEBS 2x4 SP No.3
OTHERS 2x4 SP No.3

BRACING-
TOP CHORD Structural wood sheathing directly applied.
BOT CHORD Rigid ceiling directly applied.

MiTek recommends that Stabilizers and required cross bracing be installed during truss erection, in accordance with Stabilizer Installation guide.

REACTIONS. (lb/size) 3=1640/0-8-0 (min. 0-2-1), 15=-0/Mechanical, 16=0/Mechanical, 8=1663/0-8-0 (min. 0-1-8)
Max Horz 3=490(LC 9), 15=458(LC 4), 16=-223(LC 9)
Max Uplift3=-1763(LC 4), 8=-1787(LC 4)
Max Grav 3=1730(LC 5), 8=1754(LC 5)

FORCES. (lb) - Max. Comp./Max. Ten. - All forces 250 (lb) or less except when shown.
TOP CHORD 1-2=-437/313, 2-3=-437/326, 3-4=-3850/3747, 4-23=-3092/3134, 5-23=-3074/3144, 5-6=-3041/3144, 6-24=-3091/3155, 7-24=-3109/3145, 7-8=-3710/3609
BOT CHORD 3-14=-3454/3473, 13-14=-3454/3473, 12-13=-2728/2688, 11-12=-3315/3332, 8-11=-3315/3332
WEBS 4-13=-920/778, 5-13=-240/370, 6-12=-230/357, 7-12=-796/621, 1-15=-291/458

NOTES- (10-11)
1) Unbalanced roof live loads have been considered for this design.
2) Wind: ASCE 7-16; Vult=175mph (3-second gust) Vasd=136mph; HVHZ; TCDL=5.0psf; BCDL=5.0psf; h=28ft; Cat. II; Exp C; Part. Encl., GCpi=0.55; C-C Exterior(2E) -3-0-15 to 0-0-0, Interior(1) 0-0-0 to 6-9-1, Exterior(2R) 6-9-1 to 18-2-15, Interior(1) 18-2-15 to 25-0-0, Exterior(2E) 25-0-0 to 28-0-15; Lumber DOL=1.60 plate grip DOL=1.60
3) Building Designer / Project engineer responsible for verifying applied roof live load shown covers rain loading requirements specific to the use of this truss component.
4) Provide adequate drainage to prevent water ponding.
5) All plates are MT20 plates unless otherwise indicated.
6) This truss has been designed for a 10.0 psf bottom chord live load nonconcurrent with any other live loads.
7) Refer to girder(s) for truss to truss connections.
8) Provide mechanical connection (by others) of truss to bearing plate capable of withstanding 1763 lb uplift at joint 3 and 1787 lb uplift at joint 8.
9) This truss design requires that a minimum of 7/16" structural wood sheathing be applied directly to the top chord and 1/2" gypsum sheetrock be applied directly to the bottom chord.
10) All truss to truss connection by TCI are on the Truss Placement plan.
11) ARMANDO R. PEREZ PE. # 28026 Ph: (305) 882-8826

LOAD CASE(S) Standard

Job	Truss	Truss Type	Qty	Ply	12715 ROLLING ROAD DR, PINECREST, FL.
12715	H14	HIP	1	1	Job Reference (optional)

Trusscorp Int., 9590 NW 89 AVE, Medley, FL

8.820 s Dec 4 2024 MiTek Industries, Inc. Thu Jun 5 12:42:34 2025 Page 1
ID:_GLN6EJBZ1GCD23RDL_tAxzKvJz-twnDtilp8d9BAwycGhj86VW459A?u1TGMH0EWhz9LO3

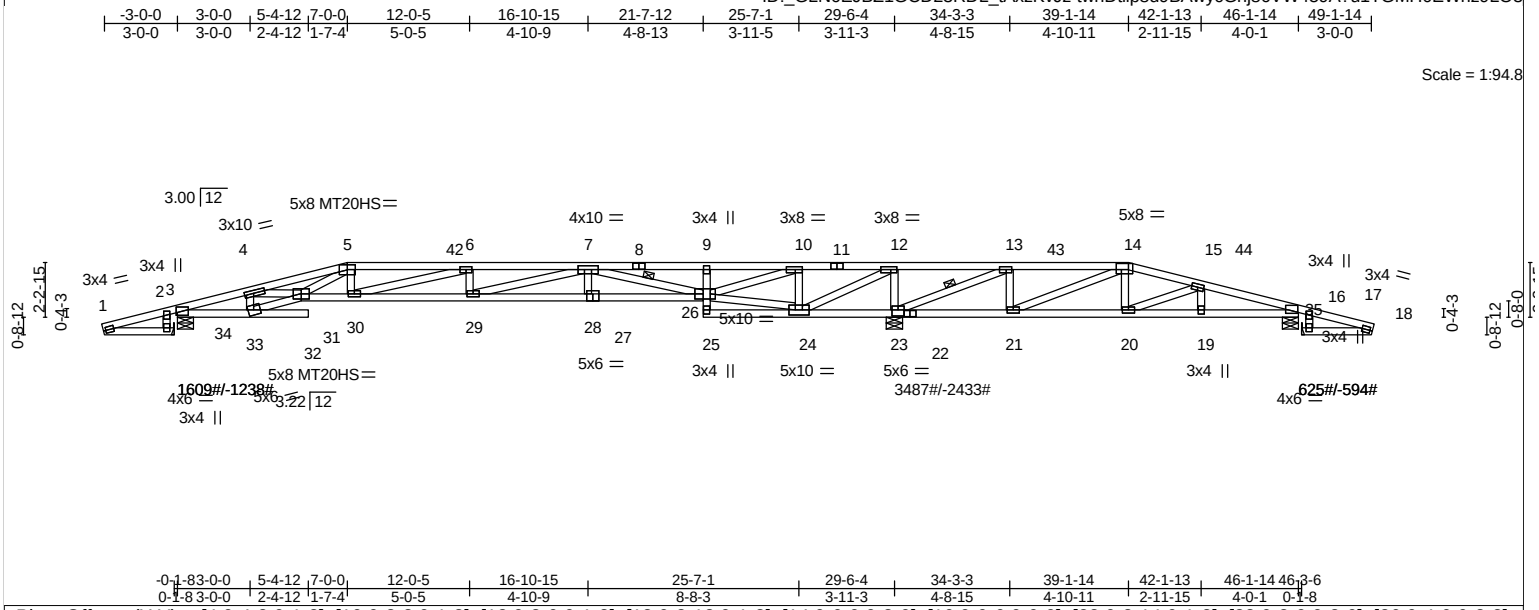

Plate Offsets (X,Y)-- [4:0-4-8,0-1-8], [10:0-3-8,0-1-8], [12:0-3-0,0-1-8], [13:0-2-12,0-1-8], [14:0-6-0,0-3-0], [16:0-0-6,0-0-9], [22:0-2-14,0-1-8], [23:0-3-0,0-3-0], [26:0-4-0,0-2-8], [33:0-2-12,0-2-8]

LOADING (psf)		**SPACING-**	2-0-0	**CSI.**		**DEFL.**	in	(loc)	l/defl	L/d	**PLATES**	**GRIP**
TCLL	30.0	Plate Grip DOL	1.33	TC	0.96	Vert(LL)	0.72	28-29	>489	360	MT20	244/190
TCDL	15.0	Lumber DOL	1.33	BC	0.92	Vert(CT)	-1.17	28-29	>302	180	MT20HS	187/143
BCLL	0.0	Rep Stress Incr	YES	WB	0.95	Horz(CT)	0.21	23	n/a	n/a		
BCDL	10.0	Code FBC2020/TPI2014		Matrix-AS							Weight: 243 lb	FT = 0%

LUMBER-
TOP CHORD 2x4 SP No.2 *Except*
T5: 2x4 SP 2400F 2.0E, T4: 2x4 SP No.1
BOT CHORD 2x4 SP No.2 *Except*
B1,B3,B7: 2x4 SP No.1, B5: 2x4 SP No.3
WEBS 2x4 SP No.3 *Except*
W1,W5: 2x4 SP No.2
OTHERS 2x4 SP No.3

BRACING-
TOP CHORD Structural wood sheathing directly applied.
BOT CHORD Rigid ceiling directly applied.
WEBS 1 Row at midpt 7-26, 13-23

MiTek recommends that Stabilizers and required cross bracing be installed during truss erection, in accordance with Stabilizer Installation guide.

REACTIONS. (lb/size) 3=1595/0-8-0 (min. 0-1-14), 23=3487/0-8-0 (min. 0-4-2), 34=0/Mechanical, 35=0/Mechanical, 16=597/0-8-0 (min. 0-1-8)
Max Horz 3=630(LC 9), 34=236(LC 10), 35=-682(LC 9)
Max Uplift3=-1238(LC 4), 23=-2433(LC 4), 16=-594(LC 4)
Max Grav 3=1609(LC 9), 23=3487(LC 1), 16=625(LC 10)

FORCES. (lb) - Max. Comp./Max. Ten. - All forces 250 (lb) or less except when shown.
TOP CHORD 3-4=-3109/2107, 4-5=-5284/3791, 5-42=-4472/3338, 6-42=-4472/3338, 6-7=-5318/3793, 7-8=-1134/587, 8-9=-1134/587, 9-10=-1002/511, 10-11=-1428/2027, 11-12=-1428/2027, 12-13=-3633/5275, 13-43=-1443/2365, 14-43=-1443/2365, 14-15=-187/930, 15-44=-73/897, 16-44=-80/874, 16-17=-642/217, 17-18=-650/213
BOT CHORD 3-33=-1669/2355, 30-31=-2839/3889, 29-30=-3309/4723, 28-29=-2285/3506, 27-28=-2285/3506, 26-27=-2285/3506, 9-26=-415/373, 23-24=-5811/4118, 22-23=-3047/1927, 21-22=-3047/1927, 20-21=-1558/607, 19-20=-1555/445, 16-19=-1555/445, 31-33=-1758/2485
WEBS 4-33=-879/763, 5-30=-125/423, 24-26=-2350/1739, 10-26=-1961/2912, 10-24=-1242/912, 12-24=-2485/3660, 12-23=-2138/1532, 4-31=-1602/2234, 5-31=-505/822, 18-35=-216/683, 7-26=-3174/2256, 6-30=-1089/471, 6-29=-239/333, 7-29=-1059/1258, 14-21=-1895/1422, 13-23=-3178/2369, 13-21=-454/773

NOTES- (11-12)
1) Unbalanced roof live loads have been considered for this design.
2) Wind: ASCE 7-16; Vult=175mph (3-second gust) Vasd=136mph; HVHZ; TCDL=5.0psf; BCDL=5.0psf; h=28ft; Cat. II; Exp C; Encl., GCpi=0.18; C-C Exterior(2E) -3-0-15 to 0-0-0, Interior(1) 0-0-0 to 2-9-1, Exterior(2R) 2-9-1 to 11-2-15, Interior(1) 11-2-15 to 34-10-15, Exterior(2R) 34-10-15 to 43-4-13, Interior(1) 43-4-13 to 46-1-14, Exterior(2E) 46-1-14 to 49-2-13; porch right exposed; Lumber DOL=1.60 plate grip DOL=1.60
3) Building Designer / Project engineer responsible for verifying applied roof live load shown covers rain loading requirements specific to the use of this truss component.
4) Provide adequate drainage to prevent water ponding.
5) All plates are MT20 plates unless otherwise indicated.
6) All plates are 3x6 MT20 unless otherwise indicated.
7) This truss has been designed for a 10.0 psf bottom chord live load nonconcurrent with any other live loads.
8) Refer to girder(s) for truss to truss connections.
9) Provide mechanical connection (by others) of truss to bearing plate capable of withstanding 1238 lb uplift at joint 3, 2433 lb uplift at joint 23 and 594 lb uplift at joint 16.
10) This truss design requires that a minimum of 7/16" structural wood sheathing be applied directly to the top chord and 1/2" gypsum sheetrock be applied directly to the bottom chord.
11) All truss to truss connection by TCI are on the Truss Placement plan.
12) ARMANDO R. PEREZ PE. # 28026 Ph: (305) 882-8826

LOAD CASE(S) Standard

Job	Truss	Truss Type	Qty	Ply	12715 ROLLING ROAD DR, PINECREST, FL.
12715	H15	HIP	1	1	Job Reference (optional)

Trusscorp Int., 9590 NW 89 AVE, Medley, FL

8.820 s Dec 4 2024 MiTek Industries, Inc. Thu Jun 5 12:42:37 2025 Page 1
ID:_GLN6EJBZ1GCD23RDL_tAxzKvJz-HVSLWjniQYYm1NhBxpGrk78cuNBF5N2j2FEu60z9LO0

-3-0-0	3-0-0	5-4-12	9-0-0	13-4-5	17-6-15	21-7-12	25-10-6	29-6-4	33-3-3	37-1-14	41-1-7	46-1-14	49-1-14
3-0-0	3-0-0	2-4-12	3-7-4	4-4-5	4-2-9	4-0-13	4-2-10	3-7-14	3-8-15	3-10-11	3-11-9	5-0-7	3-0-0

Scale = 1:89.2

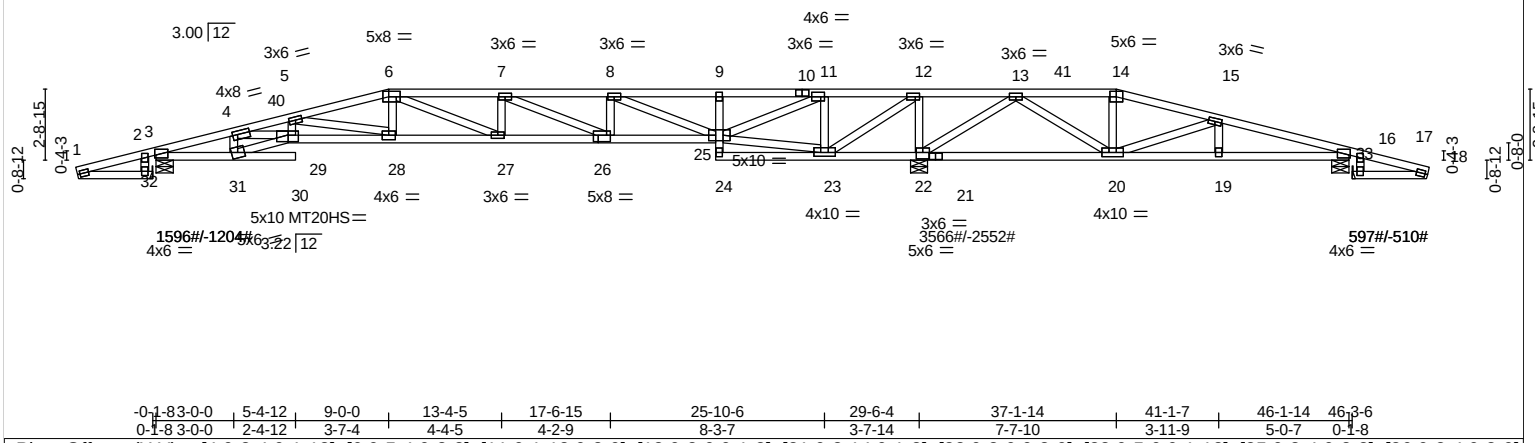

-0-1-8	3-0-0	5-4-12	9-0-0	13-4-5	17-6-15	25-10-6	29-6-4	37-1-14	41-1-7	46-1-14	46-3-6
0-1-8	3-0-0	2-4-12	3-7-4	4-4-5	4-2-9	8-3-7	3-7-14	7-7-10	3-11-9	5-0-7	0-1-8

Plate Offsets (X,Y)-- [4:0-2-4,0-1-12], [6:0-5-4,0-2-8], [11:0-1-12,0-2-0], [12:0-2-0,0-1-8], [21:0-2-14,0-1-8], [22:0-3-0,0-3-0], [23:0-5-0,0-1-12], [25:0-3-4,0-2-8], [26:0-2-4,0-3-0], [29:0-4-12,0-3-0], [31:0-2-12,0-2-8]

LOADING (psf)		**SPACING-**	2-0-0	**CSI.**		**DEFL.**	in	(loc)	l/defl	L/d	**PLATES**	**GRIP**
TCLL	30.0	Plate Grip DOL	1.33	TC	0.86	Vert(LL)	0.51	30	>692	360	MT20	244/190
TCDL	15.0	Lumber DOL	1.33	BC	0.95	Vert(CT)	-0.84	30	>424	180	MT20HS	187/143
BCLL	0.0	Rep Stress Incr	YES	WB	0.96	Horz(CT)	0.18	22	n/a	n/a		
BCDL	10.0	Code FBC2020/TPI2014		Matrix-AS							Weight: 248 lb	FT = 0%

LUMBER-
TOP CHORD 2x4 SP No.2 *Except*
T4,T3: 2x4 SP No.1
BOT CHORD 2x4 SP No.2 *Except*
B1,B3,B7: 2x4 SP No.1, B5: 2x4 SP No.3
WEBS 2x4 SP No.3 *Except*
W5: 2x4 SP No.2
OTHERS 2x4 SP No.3

BRACING-
TOP CHORD Structural wood sheathing directly applied.
BOT CHORD Rigid ceiling directly applied.

MiTek recommends that Stabilizers and required cross bracing be installed during truss erection, in accordance with Stabilizer Installation guide.

REACTIONS. (lb/size) 3=1570/0-8-0 (min. 0-1-14), 22=3566/0-8-0 (min. 0-4-3), 32=-0/Mechanical, 33=-0/Mechanical, 16=543/0-8-0 (min. 0-1-8)
Max Horz 3=428(LC 9), 32=161(LC 4), 33=-415(LC 9)
Max Uplift3=-1204(LC 4), 22=-2552(LC 4), 16=-510(LC 4)
Max Grav 3=1596(LC 9), 22=3566(LC 1), 16=597(LC 10)

FORCES. (lb) - Max. Comp./Max. Ten. - All forces 250 (lb) or less except when shown.
TOP CHORD 3-4=-3107/2005, 4-40=-5580/3986, 5-40=-5547/3989, 5-6=-3823/2798, 6-7=-3784/2717, 7-8=-2893/1899, 8-9=-732/263, 9-10=-703/259, 10-11=-703/259, 11-12=-1432/1998, 12-41=-3209/4519, 13-41=-3209/4519, 13-14=-577/1334, 14-15=-624/1356, 15-16=-174/1040, 16-17=-383/12, 17-18=-395/11
BOT CHORD 3-31=-1780/2606, 28-29=-3651/5023, 27-28=-2475/3404, 26-27=-2399/3400, 25-26=-1493/2346, 9-25=-386/350, 22-23=-4769/3527, 21-22=-2913/1934, 20-21=-2913/1934, 19-20=-1410/321, 16-19=-1410/321, 29-31=-1869/2746
WEBS 4-31=-937/757, 5-28=-1697/1224, 6-28=-249/495, 23-25=-2050/1574, 11-25=-1785/2594, 11-23=-1376/1020, 12-23=-2165/3071, 12-22=-2120/1556, 14-20=-595/555, 15-20=-710/574, 18-33=-5/416, 4-29=-1931/2532, 8-25=-2266/1681, 5-29=-255/549, 6-27=-51/312, 8-26=-344/541, 7-26=-1050/906, 13-22=-2368/1903, 13-20=-1242/1746

NOTES- (11-12)
1) Unbalanced roof live loads have been considered for this design.
2) Wind: ASCE 7-16; Vult=175mph (3-second gust) Vasd=136mph; HVHZ; TCDL=5.0psf; BCDL=5.0psf; h=28ft; Cat. II; Exp C; Encl., GCpi=0.18; C-C Exterior(2E) -3-0-15 to 0-0-0, Interior(1) 0-0-0 to 4-9-1, Exterior(2R) 4-9-1 to 13-4-5, Interior(1) 13-4-5 to 32-10-15, Exterior(2R) 32-10-15 to 41-1-7, Interior(1) 41-1-7 to 46-1-14, Exterior(2E) 46-1-14 to 49-2-13; porch right exposed; Lumber DOL=1.60 plate grip DOL=1.60
3) Building Designer / Project engineer responsible for verifying applied roof live load shown covers rain loading requirements specific to the use of this truss component.
4) Provide adequate drainage to prevent water ponding.
5) All plates are MT20 plates unless otherwise indicated.
6) All plates are 3x4 MT20 unless otherwise indicated.
7) This truss has been designed for a 10.0 psf bottom chord live load nonconcurrent with any other live loads.
8) Refer to girder(s) for truss to truss connections.
9) Provide mechanical connection (by others) of truss to bearing plate capable of withstanding 1204 lb uplift at joint 3, 2552 lb uplift at joint 22 and 510 lb uplift at joint 16.
10) This truss design requires that a minimum of 7/16" structural wood sheathing be applied directly to the top chord and 1/2" gypsum sheetrock be applied directly to the bottom chord.
11) All truss to truss connection by TCI are on the Truss Placement plan.
12) ARMANDO R. PEREZ PE. # 28026 Ph: (305) 882-8826

LOAD CASE(S) Standard

Job	Truss	Truss Type	Qty	Ply	12715 ROLLING ROAD DR, PINECREST, FL.
12715	H16	HIP	1	1	Job Reference (optional)

Trusscorp Int., 9590 NW 89 AVE, Medley, FL

8.820 s Dec 4 2024 MiTek Industries, Inc. Thu Jun 5 12:42:39 2025 Page 1
ID:_GLN6EJBZ1GCD23RDL_tAxzKvJz-Eua6xPoyy9oTGhqa3EJKpYEwEAtTZH0?WZj?Buz9LO_

-3-0-0	3-0-0	5-4-12	11-0-0	16-5-10	21-7-12	25-7-0	29-6-4	35-1-14	40-1-1	46-1-14	49-1-14
3-0-0	3-0-0	2-4-12	5-7-4	5-5-10	5-2-2	3-11-4	3-11-4	5-7-10	4-11-3	6-0-13	3-0-0

Scale = 1:89.2

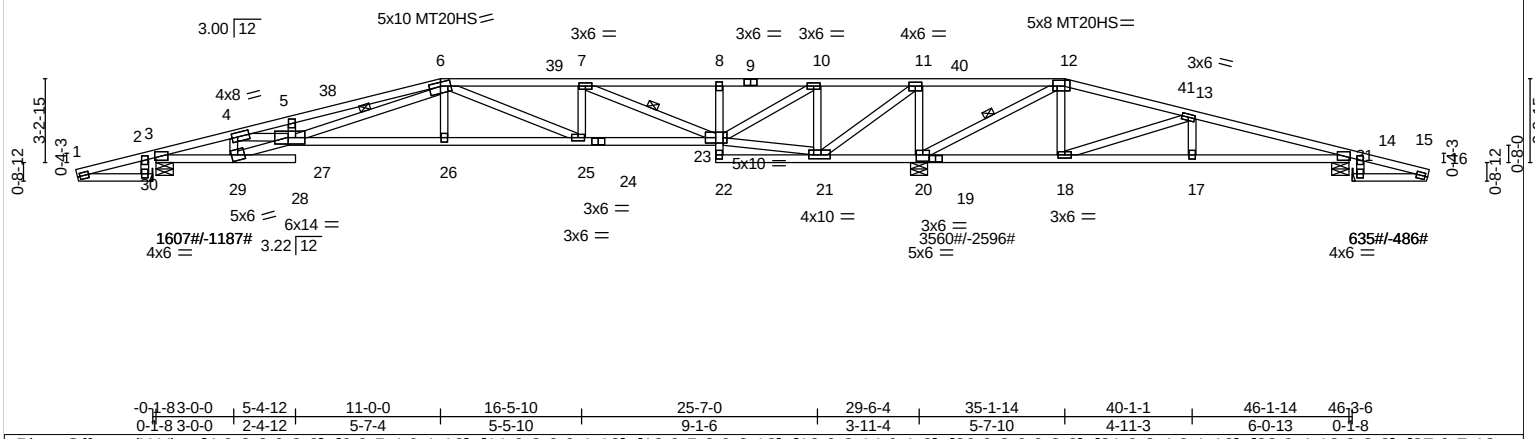

-0-1-8	3-0-0	5-4-12	11-0-0	16-5-10	25-7-0	29-6-4	35-1-14	40-1-1	46-1-14	46-3-6
0-1-8	3-0-0	2-4-12	5-7-4	5-5-10	9-1-6	3-11-4	5-7-10	4-11-3	6-0-13	0-1-8

Plate Offsets (X,Y)-- [4:0-2-8,0-2-0], [6:0-5-4,0-1-12], [11:0-3-0,0-1-12], [12:0-5-8,0-2-12], [19:0-2-14,0-1-8], [20:0-3-0,0-3-0], [21:0-2-4,0-1-12], [23:0-4-12,0-2-8], [27:0-7-12,0-3-0], [29:0-2-12,0-2-8]

LOADING (psf)		**SPACING-**	2-0-0	**CSI.**		**DEFL.**	in	(loc)	l/defl	L/d	**PLATES**	**GRIP**
TCLL	30.0	Plate Grip DOL	1.33	TC	1.00	Vert(LL)	0.53	28	>667	360	MT20	244/190
TCDL	15.0	Lumber DOL	1.33	BC	0.90	Vert(CT)	-0.88	28	>403	180	MT20HS	187/143
BCLL	0.0	Rep Stress Incr	YES	WB	1.00	Horz(CT)	0.16	20	n/a	n/a		
BCDL	10.0	Code FBC2020/TPI2014		Matrix-AS							Weight: 249 lb	FT = 0%

LUMBER-
TOP CHORD 2x4 SP No.1 *Except*
T2: 2x4 SP No.2
BOT CHORD 2x4 SP No.2 *Except*
B1,B8: 2x4 SP No.1, B3,B6: 2x4 SP No.3
WEBS 2x4 SP No.3
OTHERS 2x4 SP No.3

BRACING-
TOP CHORD Structural wood sheathing directly applied.
BOT CHORD Rigid ceiling directly applied.
WEBS 1 Row at midpt 6-27, 12-20, 7-23

MiTek recommends that Stabilizers and required cross bracing be installed during truss erection, in accordance with Stabilizer Installation guide.

REACTIONS. (lb/size) 3=1572/0-8-0 (min. 0-1-14), 20=3560/0-8-0 (min. 0-4-3), 30=0/Mechanical, 31=0/Mechanical, 14=547/0-8-0 (min. 0-1-8)
Max Horz 3=376(LC 9), 30=155(LC 10), 31=-431(LC 9)
Max Uplift3=-1187(LC 4), 20=-2596(LC 4), 14=-486(LC 4)
Max Grav 3=1607(LC 9), 20=3560(LC 1), 14=635(LC 10)

FORCES. (lb) - Max. Comp./Max. Ten. - All forces 250 (lb) or less except when shown.
TOP CHORD 3-4=-3087/1918, 4-5=-5536/3818, 5-38=-5567/3977, 6-38=-5526/3987, 6-39=-2554/1772, 7-39=-2554/1772, 7-8=-678/269, 8-9=-640/254, 9-10=-640/254, 10-11=-1067/1515, 11-40=-2597/3713, 12-40=-2597/3713, 12-41=-922/1664, 13-41=-928/1631, 13-14=-303/1199, 14-15=-399/27, 15-16=-410/26
BOT CHORD 3-29=-1676/2528, 5-27=-373/430, 26-27=-1985/2743, 25-26=-1984/2754, 24-25=-1392/2122, 23-24=-1392/2122, 8-23=-436/386, 20-21=-3996/2977, 19-20=-2015/1197, 18-19=-2015/1197, 17-18=-1575/468, 14-17=-1575/468, 27-29=-1749/2650
WEBS 4-29=-856/678, 6-27=-1703/2412, 6-26=0/267, 21-23=-1646/1330, 10-23=-1493/2122, 10-21=-1363/1006, 11-21=-1934/2780, 11-20=-2218/1686, 12-20=-2610/2010, 12-18=-185/420, 13-18=-1024/778, 16-31=-20/432, 4-27=-1855/2478, 7-23=-2126/1636, 6-25=-745/641, 7-25=-169/394

NOTES- (11-12)
1) Unbalanced roof live loads have been considered for this design.
2) Wind: ASCE 7-16; Vult=175mph (3-second gust) Vasd=136mph; HVHZ; TCDL=5.0psf; BCDL=5.0psf; h=28ft; Cat. II; Exp C; Encl., GCpi=0.18; C-C Exterior(2E) -3-0-15 to 0-0-0, Interior(1) 0-0-0 to 6-9-1, Exterior(2R) 6-9-1 to 15-2-15, Interior(1) 15-2-15 to 30-10-15, Exterior(2R) 30-10-15 to 39-4-13, Interior(1) 39-4-13 to 46-1-14, Exterior(2E) 46-1-14 to 49-2-13; porch right exposed; Lumber DOL=1.60 plate grip DOL=1.60
3) Building Designer / Project engineer responsible for verifying applied roof live load shown covers rain loading requirements specific to the use of this truss component.
4) Provide adequate drainage to prevent water ponding.
5) All plates are MT20 plates unless otherwise indicated.
6) All plates are 3x4 MT20 unless otherwise indicated.
7) This truss has been designed for a 10.0 psf bottom chord live load nonconcurrent with any other live loads.
8) Refer to girder(s) for truss to truss connections.
9) Provide mechanical connection (by others) of truss to bearing plate capable of withstanding 1187 lb uplift at joint 3, 2596 lb uplift at joint 20 and 486 lb uplift at joint 14.
10) This truss design requires that a minimum of 7/16" structural wood sheathing be applied directly to the top chord and 1/2" gypsum sheetrock be applied directly to the bottom chord.
11) All truss to truss connection by TCI are on the Truss Placement plan.
12) ARMANDO R. PEREZ PE. # 28026 Ph: (305) 882-8826

LOAD CASE(S) Standard

Job	Truss	Truss Type	Qty	Ply	12715 ROLLING ROAD DR, PINECREST, FL.
12715	H17	HIP	1	1	Job Reference (optional)

Trusscorp Int., 9590 NW 89 AVE, Medley, FL

8.820 s Dec 4 2024 MiTek Industries, Inc. Thu Jun 5 12:42:41 2025 Page 1
ID:_GLN6EJBZ1GCD23RDL_tAxzKvJz-AGisL5qCUm2BW?_yAfLouzJHw_Ym1DwIztC6Fnz9LNy

-3-0-0	7-1-4	13-0-0	18-6-1	24-0-3	29-6-4	33-1-14	39-0-10	46-1-14	49-1-14
3-0-0	7-1-4	5-10-12	5-6-1	5-6-1	5-6-1	3-7-10	5-10-12	7-1-4	3-0-0

Scale = 1:94.8

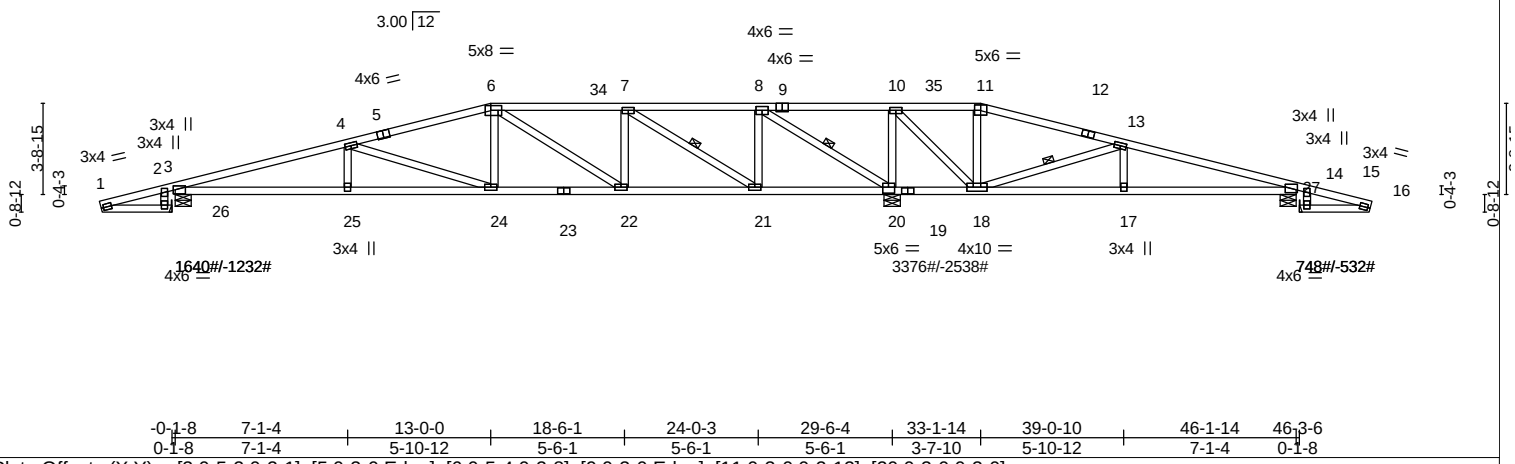

-0-1-8	7-1-4	13-0-0	18-6-1	24-0-3	29-6-4	33-1-14	39-0-10	46-1-14	46-3-6
0-1-8	7-1-4	5-10-12	5-6-1	5-6-1	5-6-1	3-7-10	5-10-12	7-1-4	0-1-8

Plate Offsets (X,Y)-- [3:0-5-2,0-2-1], [5:0-3-0,Edge], [6:0-5-4,0-2-8], [9:0-3-0,Edge], [11:0-3-0,0-2-12], [20:0-3-0,0-3-0]

LOADING (psf)		**SPACING-**	2-0-0	**CSI.**		**DEFL.**	in	(loc)	l/defl	L/d	**PLATES**	**GRIP**
TCLL	30.0	Plate Grip DOL	1.33	TC	0.92	Vert(LL)	0.31	24-25	>999	360	MT20	244/190
TCDL	15.0	Lumber DOL	1.33	BC	0.97	Vert(CT)	-0.51	24-25	>695	180		
BCLL	0.0	Rep Stress Incr	YES	WB	0.84	Horz(CT)	0.10	20	n/a	n/a		
BCDL	10.0	Code FBC2020/TPI2014		Matrix-AS							Weight: 238 lb	FT = 0%

LUMBER-
TOP CHORD 2x4 SP No.2 *Except*
T4: 2x4 SP No.1
BOT CHORD 2x4 SP No.2 *Except*
B3: 2x4 SP No.1
WEBS 2x4 SP No.3
OTHERS 2x4 SP No.3

BRACING-
TOP CHORD Structural wood sheathing directly applied.
BOT CHORD Rigid ceiling directly applied.
WEBS 1 Row at midpt 7-21, 8-20, 13-18

MiTek recommends that Stabilizers and required cross bracing be installed during truss erection, in accordance with Stabilizer Installation guide.

REACTIONS. (lb/size) 3=1593/0-8-0 (min. 0-1-15), 20=3376/0-8-0 (min. 0-4-0), 26=-0/Mechanical, 27=-0/Mechanical, 14=662/0-8-0 (min. 0-1-8)
Max Horz 3=507(LC 9), 26=361(LC 4), 27=-247(LC 9)
Max Uplift3=-1232(LC 4), 20=-2538(LC 4), 14=-532(LC 4)
Max Grav 3=1640(LC 9), 20=3376(LC 1), 14=748(LC 10)

FORCES. (lb) - Max. Comp./Max. Ten. - All forces 250 (lb) or less except when shown.
TOP CHORD 1-2=-344/306, 2-3=-344/319, 3-4=-3647/2486, 4-5=-2569/1822, 5-6=-2505/1833, 6-34=-1855/1286, 7-34=-1855/1286, 7-8=-304/23, 8-9=-1851/2611, 9-35=-1851/2611, 10-35=-1851/2611, 10-11=-894/1396, 11-12=-968/1464, 12-13=-977/1395, 13-14=-350/795
BOT CHORD 3-25=-2335/3209, 24-25=-2335/3209, 23-24=-1564/2203, 22-23=-1564/2203, 21-22=-987/1608, 20-21=-178/279, 19-20=-2724/2150, 18-19=-2724/2150, 17-18=-992/238, 14-17=-992/238
WEBS 4-24=-1093/821, 6-24=-220/479, 6-22=-789/681, 7-22=-304/519, 7-21=-1918/1494, 8-21=-727/1121, 8-20=-3054/2209, 10-20=-1639/1385, 10-18=-1347/1709, 11-18=-705/685, 13-18=-1372/1039, 13-17=0/274, 1-26=-260/362

NOTES- (10-11)
1) Unbalanced roof live loads have been considered for this design.
2) Wind: ASCE 7-16; Vult=175mph (3-second gust) Vasd=136mph; HVHZ; TCDL=5.0psf; BCDL=5.0psf; h=28ft; Cat. II; Exp C; Encl., GCpi=0.18; C-C Exterior(2E) -3-0-15 to 0-0-0, Interior(1) 0-0-0 to 8-9-1, Exterior(2R) 8-9-1 to 17-2-15, Interior(1) 17-2-15 to 28-10-15, Exterior(2R) 28-10-15 to 37-4-13, Interior(1) 37-4-13 to 46-1-14, Exterior(2E) 46-1-14 to 49-2-13; porch right exposed; Lumber DOL=1.60 plate grip DOL=1.60
3) Building Designer / Project engineer responsible for verifying applied roof live load shown covers rain loading requirements specific to the use of this truss component.
4) Provide adequate drainage to prevent water ponding.
5) All plates are 3x6 MT20 unless otherwise indicated.
6) This truss has been designed for a 10.0 psf bottom chord live load nonconcurrent with any other live loads.
7) Refer to girder(s) for truss to truss connections.
8) Provide mechanical connection (by others) of truss to bearing plate capable of withstanding 1232 lb uplift at joint 3, 2538 lb uplift at joint 20 and 532 lb uplift at joint 14.
9) This truss design requires that a minimum of 7/16" structural wood sheathing be applied directly to the top chord and 1/2" gypsum sheetrock be applied directly to the bottom chord.
10) All truss to truss connection by TCI are on the Truss Placement plan.
11) ARMANDO R. PEREZ PE. # 28026 Ph: (305) 882-8826

LOAD CASE(S) Standard

Job	Truss	Truss Type	Qty	Ply	12715 ROLLING ROAD DR, PINECREST, FL.
12715	H18	HIP	1	1	Job Reference (optional)

Trusscorp Int., 9590 NW 89 AVE, Medley, FL

8.820 s Dec 4 2024 MiTek Industries, Inc. Thu Jun 5 12:42:43 2025 Page 1
ID:_GLN6EJBZ1GCD23RDL_tAxzKvJz-6fpdmnsT0OlvlI8LI4NGzOOdFoHoV99bQBhDJgz9LNw

-3-0-0	4-10-4	9-5-0	13-10-8	19-1-1	24-3-11	29-6-4	32-3-6	36-8-14	41-3-10	46-1-14	49-1-14
3-0-0	4-10-4	4-6-11	4-5-8	5-2-9	5-2-9	5-2-9	2-9-2	4-5-8	4-6-11	4-10-4	3-0-0

Scale = 1:94.8

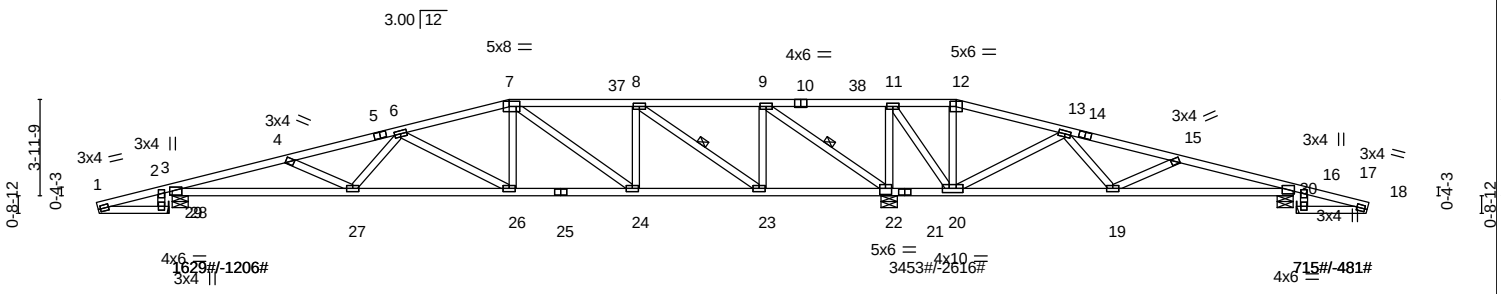

-0-1-8	7-5-4	13-10-8	19-1-1	24-3-11	29-6-4	32-3-6	38-8-10	46-1-14	46-3-6
0-1-8	7-5-4	6-5-4	5-2-9	5-2-9	5-2-9	2-9-2	6-5-4	7-5-4	0-1-8

Plate Offsets (X,Y)-- [3:0-4-14,0-2-1], [7:0-5-4,0-2-8], [10:0-3-0,Edge], [22:0-3-0,0-3-0]

LOADING (psf)		**SPACING-**	2-0-0	**CSI.**		**DEFL.**	in	(loc)	l/defl	L/d	**PLATES**	**GRIP**
TCLL	30.0	Plate Grip DOL	1.33	TC	0.93	Vert(LL)	0.29	26-27	>999	360	MT20	244/190
TCDL	15.0	Lumber DOL	1.33	BC	0.75	Vert(CT)	-0.49	26-27	>725	180		
BCLL	0.0	Rep Stress Incr	YES	WB	0.73	Horz(CT)	0.09	22	n/a	n/a		
BCDL	10.0	Code FBC2020/TPI2014		Matrix-AS							Weight: 249 lb	FT = 0%

LUMBER-
TOP CHORD 2x4 SP No.2 *Except*
T4: 2x4 SP No.1
BOT CHORD 2x4 SP No.1 *Except*
B2: 2x4 SP No.2
WEBS 2x4 SP No.3
OTHERS 2x4 SP No.3

BRACING-
TOP CHORD Structural wood sheathing directly applied.
BOT CHORD Rigid ceiling directly applied.
WEBS 1 Row at midpt 8-23, 9-22

MiTek recommends that Stabilizers and required cross bracing be installed during truss erection, in accordance with Stabilizer Installation guide.

REACTIONS. (lb/size) 3=1567/0-8-0 (min. 0-1-15), 22=3453/0-8-0 (min. 0-4-1), 28=-0/Mechanical, 30=-0/Mechanical, 16=612/0-8-0 (min. 0-1-8)
Max Horz 3=470(LC 9), 28=404(LC 4), 30=-216(LC 4)
Max Uplift3=-1206(LC 4), 22=-2616(LC 4), 16=-481(LC 4)
Max Grav 3=1629(LC 9), 22=3453(LC 1), 16=715(LC 10)

FORCES. (lb) - Max. Comp./Max. Ten. - All forces 250 (lb) or less except when shown.
TOP CHORD 1-2=-385/350, 2-3=-385/364, 3-4=-3726/2504, 4-5=-3351/2227, 5-6=-3267/2234, 6-7=-2325/1632, 7-37=-1583/1050, 8-37=-1583/1050, 8-9=-165/301, 9-10=-1887/2664, 10-38=-1887/2664, 11-38=-1887/2664, 11-12=-1185/1754, 12-13=-1261/1822, 13-14=-464/973, 14-15=-475/942, 15-16=-484/757
BOT CHORD 3-27=-2476/3378, 26-27=-2113/2876, 25-26=-1442/2064, 24-25=-1442/2064, 23-24=-839/1419, 22-23=-292/376, 21-22=-2638/2098, 20-21=-2638/2098, 19-20=-1288/591, 16-19=-879/514
WEBS 4-27=-371/369, 6-27=-51/370, 6-26=-963/782, 7-26=-341/608, 7-24=-896/738, 8-24=-372/608, 8-23=-1904/1485, 9-23=-788/1192, 9-22=-2890/2106, 11-22=-1685/1408, 11-20=-1210/1569, 12-20=-677/618, 13-20=-1095/892, 13-19=-185/487, 15-19=-570/521, 1-29=-307/405, 28-29=-306/404

NOTES- (10-11)
1) Unbalanced roof live loads have been considered for this design.
2) Wind: ASCE 7-16; Vult=175mph (3-second gust) Vasd=136mph; HVHZ; TCDL=5.0psf; BCDL=5.0psf; h=28ft; Cat. II; Exp C; Encl., GCpi=0.18; C-C Exterior(2E) -3-0-15 to 0-0-0, Interior(1) 0-0-0 to 9-5-0, Exterior(2R) 9-5-0 to 18-1-7, Interior(1) 18-1-7 to 28-0-7, Exterior(2R) 28-0-7 to 36-8-14, Interior(1) 36-8-14 to 46-1-14, Exterior(2E) 46-1-14 to 49-2-13; porch right exposed; Lumber DOL=1.60 plate grip DOL=1.60
3) Building Designer / Project engineer responsible for verifying applied roof live load shown covers rain loading requirements specific to the use of this truss component.
4) Provide adequate drainage to prevent water ponding.
5) All plates are 3x6 MT20 unless otherwise indicated.
6) This truss has been designed for a 10.0 psf bottom chord live load nonconcurrent with any other live loads.
7) Refer to girder(s) for truss to truss connections.
8) Provide mechanical connection (by others) of truss to bearing plate capable of withstanding 1206 lb uplift at joint 3, 2616 lb uplift at joint 22 and 481 lb uplift at joint 16.
9) This truss design requires that a minimum of 7/16" structural wood sheathing be applied directly to the top chord and 1/2" gypsum sheetrock be applied directly to the bottom chord.
10) All truss to truss connection by TCI are on the Truss Placement plan.
11) ARMANDO R. PEREZ PE. # 28026 Ph: (305) 882-8826

LOAD CASE(S) Standard

Job	Truss	Truss Type	Qty	Ply	12715 ROLLING ROAD DR, PINECREST, FL.
12715	H19	HIP	1	1	Job Reference (optional)

Trusscorp Int., 9590 NW 89 AVE, Medley, FL

8.820 s Dec 4 2024 MiTek Industries, Inc. Thu Jun 5 12:42:45 2025 Page 1
ID:_GLN6EJBZ1GCD23RDL_tAxzKvJz-22xNBStjY?Yd_cIkPUQk3pTy5b1Vz6VuuVAJOYz9LNu

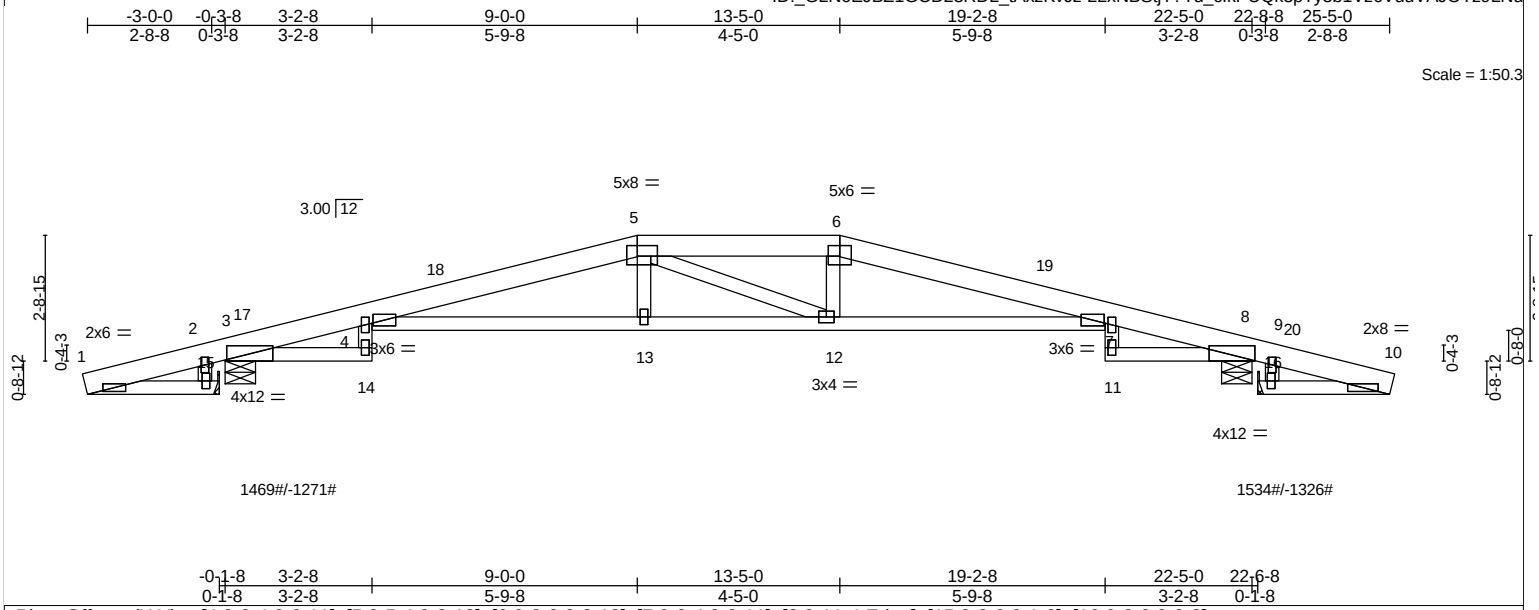

Plate Offsets (X,Y)-- [4:0-0-4,0-0-11], [5:0-5-4,0-2-12], [6:0-3-0,0-2-12], [7:0-0-4,0-0-11], [8:0-11-4,Edge], [15:0-2-0,0-1-0], [16:0-2-0,0-0-8]

LOADING (psf)		**SPACING-**	2-0-0	**CSI.**		**DEFL.**	in	(loc)	l/defl	L/d	**PLATES**	**GRIP**
TCLL	30.0	Plate Grip DOL	1.33	TC	0.97	Vert(LL)	0.26	4-13	>998	360	MT20	244/190
TCDL	15.0	Lumber DOL	1.33	BC	0.47	Vert(CT)	-0.40	4-13	>654	180		
BCLL	0.0	Rep Stress Incr	YES	WB	0.55	Horz(CT)	0.13	8	n/a	n/a		
BCDL	10.0	Code FBC2020/TPI2014		Matrix-S							Weight: 123 lb	FT = 0%

LUMBER-
TOP CHORD 2x6 SP No.2 *Except*
T3: 2x6 SP No.1
BOT CHORD 2x4 SP No.2 *Except*
B2: 2x4 SP No.3
WEBS 2x4 SP No.3
OTHERS 2x4 SP No.3

BRACING-
TOP CHORD Structural wood sheathing directly applied.
BOT CHORD Rigid ceiling directly applied or 6-0-0 oc bracing.

MiTek recommends that Stabilizers and required cross bracing be installed during truss erection, in accordance with Stabilizer Installation guide.

REACTIONS. (lb/size) 3=1469/0-8-0 (min. 0-1-12), 8=1534/0-8-0 (min. 0-1-13), 15=0/Mechanical, 16=-0/Mechanical
Max Horz 3=974(LC 1), 15=573(LC 9), 16=-1530(LC 1)
Max Uplift3=-1271(LC 4), 8=-1326(LC 4)
Max Grav 3=1469(LC 1), 8=1534(LC 1)

FORCES. (lb) - Max. Comp./Max. Ten. - All forces 250 (lb) or less except when shown.
TOP CHORD 1-2=-546/284, 2-17=-574/363, 3-17=-574/363, 3-4=-1764/1383, 4-18=-2609/2232, 5-18=-2583/2243, 5-6=-2366/2142, 6-19=-2427/2128, 7-19=-2476/2118, 7-8=-1745/1366, 8-20=-1530/1188, 9-20=-1530/1188, 9-10=-1467/1079
BOT CHORD 4-13=-842/1025, 12-13=-836/1032, 7-12=-712/858
WEBS 5-12=-432/185, 1-15=-289/573, 10-16=-1114/1530

NOTES- (9-10)
1) Unbalanced roof live loads have been considered for this design.
2) Wind: ASCE 7-16; Vult=175mph (3-second gust) Vasd=136mph; HVHZ; TCDL=5.0psf; BCDL=5.0psf; h=28ft; Cat. II; Exp C; Encl., GCpi=0.18; C-C Exterior(2E) -3-0-11 to -0-0-11, Interior(1) -0-0-11 to 4-9-1, Exterior(2R) 4-9-1 to 17-7-15, Interior(1) 17-7-15 to 22-5-11, Exterior(2E) 22-5-11 to 25-5-11; Lumber DOL=1.60 plate grip DOL=1.60
3) Building Designer / Project engineer responsible for verifying applied roof live load shown covers rain loading requirements specific to the use of this truss component.
4) Provide adequate drainage to prevent water ponding.
5) All plates are 2x4 MT20 unless otherwise indicated.
6) This truss has been designed for a 10.0 psf bottom chord live load nonconcurrent with any other live loads.
7) Refer to girder(s) for truss to truss connections.
8) Provide mechanical connection (by others) of truss to bearing plate capable of withstanding 1271 lb uplift at joint 3 and 1326 lb uplift at joint 8.
9) All truss to truss connection by TCI are on the Truss Placement plan.
10) ARMANDO R. PEREZ PE. # 28026 Ph: (305) 882-8826

LOAD CASE(S) Standard

Job	Truss	Truss Type	Qty	Ply	12715 ROLLING ROAD DR, PINECREST, FL.
12715	H20	HIP	1	1	Job Reference (optional)

Trusscorp Int., 9590 NW 89 AVE, Medley, FL — 8.820 s Dec 4 2024 MiTek Industries, Inc. Thu Jun 5 12:42:47 2025 Page 1

ID:_GLN6EJBZ1GCD23RDL_tAxzKvJz-?Q37c8vz4coLEwR6XvSC8EZIwPf9R?zBLpfQSRz9LNs

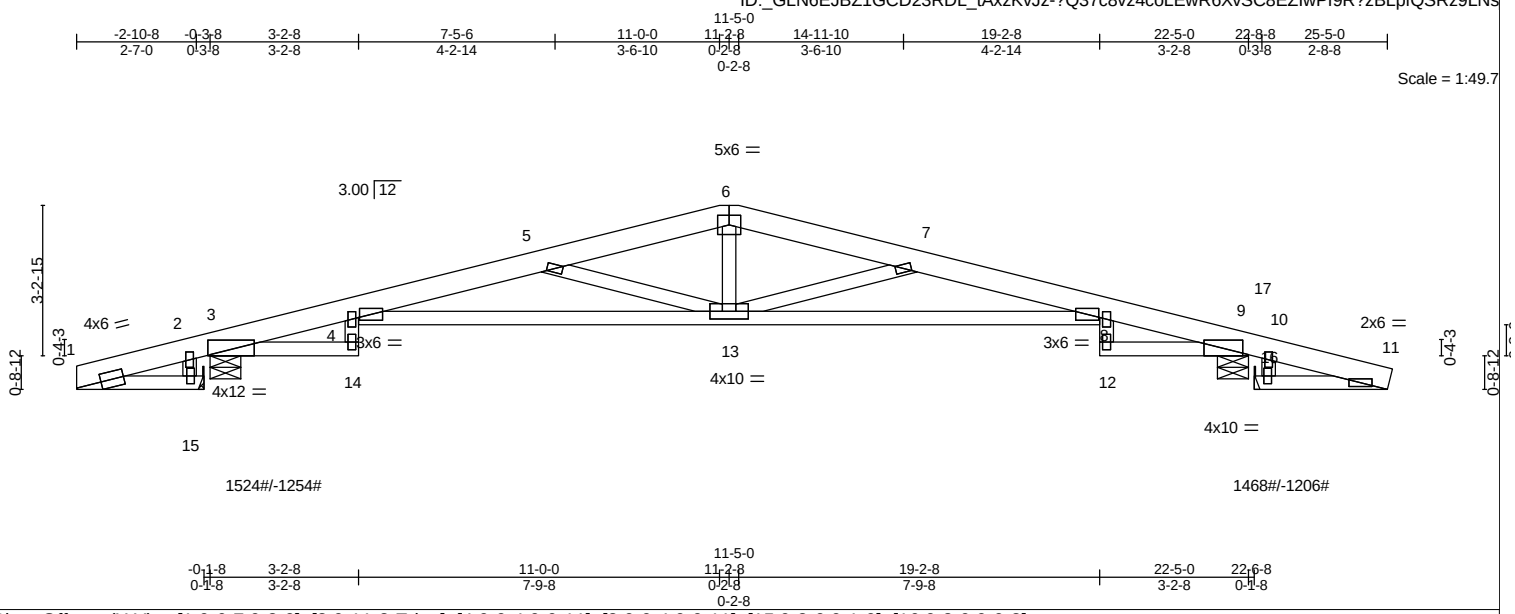

Plate Offsets (X,Y)-- [1:0-6-7,0-2-0], [3:0-11-8,Edge], [4:0-0-4,0-0-11], [8:0-0-4,0-0-11], [15:0-2-0,0-1-0], [16:0-2-0,0-0-8]

LOADING (psf)		**SPACING-**	2-0-0	**CSI.**		**DEFL.**	in	(loc)	l/defl	L/d	**PLATES**	**GRIP**
TCLL	30.0	Plate Grip DOL	1.33	TC	0.95	Vert(LL)	0.23	8-13	>999	360	MT20	244/190
TCDL	15.0	Lumber DOL	1.33	BC	0.72	Vert(CT)	-0.43	8-13	>607	180		
BCLL	0.0	Rep Stress Incr	YES	WB	0.55	Horz(CT)	-0.12	3	n/a	n/a		
BCDL	10.0	Code FBC2020/TPI2014		Matrix-S							Weight: 128 lb	FT = 0%

LUMBER-
TOP CHORD 2x6 SP No.1 *Except*
T2: 2x6 SP No.2
BOT CHORD 2x4 SP No.2 *Except*
B2: 2x4 SP No.3
WEBS 2x4 SP No.3
OTHERS 2x4 SP No.3

BRACING-
TOP CHORD Structural wood sheathing directly applied.
BOT CHORD Rigid ceiling directly applied or 5-1-11 oc bracing.

MiTek recommends that Stabilizers and required cross bracing be installed during truss erection, in accordance with Stabilizer Installation guide.

REACTIONS. (lb/size) 3=1524/0-8-0 (min. 0-1-13), 9=1468/0-8-0 (min. 0-1-12), 15=0/Mechanical, 16=-0/Mechanical
Max Horz 9=-1054(LC 1), 15=1529(LC 1), 16=-475(LC 1)
Max Uplift3=-1254(LC 4), 9=-1206(LC 4)
Max Grav 3=1524(LC 1), 9=1468(LC 1)

FORCES. (lb) - Max. Comp./Max. Ten. - All forces 250 (lb) or less except when shown.
TOP CHORD 1-2=-1462/955, 2-3=-1530/1060, 3-4=-1747/1232, 4-5=-2742/2289, 5-6=-2088/1701, 6-7=-2103/1705, 7-8=-3036/2519, 8-9=-1768/1249, 9-17=-476/222, 10-17=-476/222, 10-11=-452/148
BOT CHORD 4-13=-1029/1100, 8-13=-1280/1418
WEBS 6-13=-324/596, 5-13=-806/696, 7-13=-1046/957, 1-15=-990/1531, 11-16=-147/475

NOTES- (8-9)
1) Unbalanced roof live loads have been considered for this design.
2) Wind: ASCE 7-16; Vult=175mph (3-second gust) Vasd=136mph; HVHZ; TCDL=5.0psf; BCDL=5.0psf; h=28ft; Cat. II; Exp C; Encl., GCpi=0.18; C-C Exterior(2E) -2-11-3 to 0-4-0, Interior(1) 0-4-0 to 6-11-9, Exterior(2R) 6-11-9 to 15-3-14, Interior(1) 15-3-14 to 22-5-11, Exterior(2E) 22-5-11 to 25-5-11; Lumber DOL=1.60 plate grip DOL=1.60
3) Building Designer / Project engineer responsible for verifying applied roof live load shown covers rain loading requirements specific to the use of this truss component.
4) All plates are 2x4 MT20 unless otherwise indicated.
5) This truss has been designed for a 10.0 psf bottom chord live load nonconcurrent with any other live loads.
6) Refer to girder(s) for truss to truss connections.
7) Provide mechanical connection (by others) of truss to bearing plate capable of withstanding 1254 lb uplift at joint 3 and 1206 lb uplift at joint 9.
8) All truss to truss connection by TCI are on the Truss Placement plan.
9) ARMANDO R. PEREZ PE. # 28026 Ph: (305) 882-8826

LOAD CASE(S) Standard

Job	Truss	Truss Type	Qty	Ply	12715 ROLLING ROAD DR, PINECREST, FL.
12715	H21	HIP	1	1	Job Reference (optional)

Trusscorp Int., 9590 NW 89 AVE, Medley, FL

8.820 s Dec 4 2024 MiTek Industries, Inc. Thu Jun 5 12:42:49 2025 Page 1
ID:_GLN6EJBZ1GCD23RDL_tAxzKvJz-xpBu1qwEbE23TDbVeKUgDfejoCM0vvCUp68XXJz9LNq

-3-0-0	3-8-0	7-0-0	11-2-8	15-5-0	18-9-0	22-5-0	25-5-0
3-0-0	3-8-0	3-4-0	4-2-8	4-2-8	3-4-0	3-8-0	3-0-0

Scale = 1:51.0

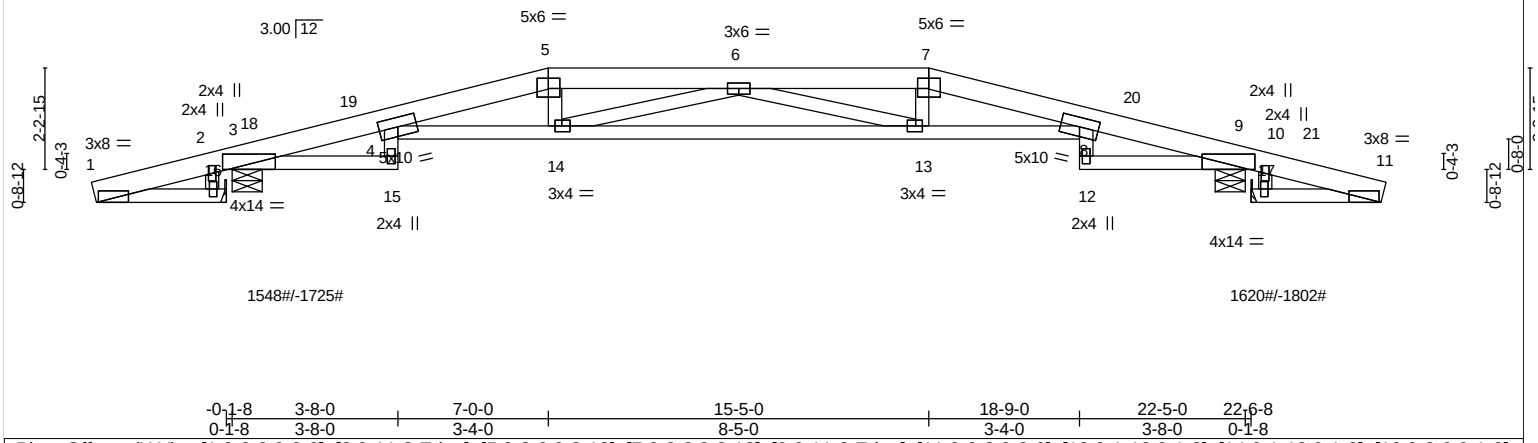

-0-1-8	3-8-0	7-0-0	15-5-0	18-9-0	22-5-0	22-6-8
0-1-8	3-8-0	3-4-0	8-5-0	3-4-0	3-8-0	0-1-8

Plate Offsets (X,Y)-- [1:0-0-8,0-3-0], [3:0-11-8,Edge], [5:0-3-0,0-2-12], [7:0-3-0,0-2-12], [9:0-11-8,Edge], [11:0-0-8,0-3-0], [13:0-1-12,0-1-8], [14:0-1-12,0-1-8], [16:0-2-0,0-1-0], [17:0-2-0,0-0-8]

LOADING (psf)		**SPACING-**	2-0-0	**CSI.**		**DEFL.**	in	(loc)	l/defl	L/d	**PLATES**	**GRIP**
TCLL	30.0	Plate Grip DOL	1.33	TC	0.61	Vert(LL)	0.31	13-14	>852	360	MT20	244/190
TCDL	15.0	Lumber DOL	1.33	BC	0.63	Vert(CT)	-0.41	13-14	>640	180		
BCLL	0.0	Rep Stress Incr	YES	WB	0.57	Horz(CT)	0.11	9	n/a	n/a		
BCDL	10.0	Code FBC2020/TPI2014		Matrix-S							Weight: 128 lb	FT = 0%

LUMBER-
TOP CHORD 2x6 SP 2400F 2.0E *Except*
T2: 2x6 SP No.2
BOT CHORD 2x4 SP No.2 *Except*
B2: 2x4 SP No.3
WEBS 2x4 SP No.3
OTHERS 2x4 SP No.3

BRACING-
TOP CHORD Structural wood sheathing directly applied or 4-0-12 oc purlins.
BOT CHORD Rigid ceiling directly applied or 3-11-8 oc bracing.

MiTek recommends that Stabilizers and required cross bracing be installed during truss erection, in accordance with Stabilizer Installation guide.

REACTIONS. (lb/size) 3=1467/0-8-0 (min. 0-1-13), 9=1536/0-8-0 (min. 0-1-15), 16=-0/Mechanical, 17=0/Mechanical
Max Horz 3=-1178(LC 4), 16=555(LC 9), 17=1617(LC 4)
Max Uplift3=-1725(LC 4), 9=-1802(LC 4)
Max Grav 3=1548(LC 5), 9=1620(LC 5)

FORCES. (lb) - Max. Comp./Max. Ten. - All forces 250 (lb) or less except when shown.
TOP CHORD 1-2=-528/429, 2-18=-590/532, 3-18=-590/532, 3-19=-1914/1987, 4-19=-1888/1995, 4-5=-3132/3344, 5-6=-3123/3363, 6-7=-2852/3062, 7-8=-2875/3063, 8-20=-1879/1981, 9-20=-1901/1972, 9-21=-1653/1710, 10-21=-1653/1710, 10-11=-1548/1564
BOT CHORD 4-14=-1400/1386, 13-14=-2155/1835, 8-13=-1087/1138
WEBS 5-14=-42/255, 6-14=-675/789, 6-13=-908/1103, 7-13=-142/323, 1-16=-439/555, 11-17=-1618/1610

NOTES- (8-9)
1) Unbalanced roof live loads have been considered for this design.
2) Wind: ASCE 7-16; Vult=175mph (3-second gust) Vasd=136mph; HVHZ; TCDL=5.0psf; BCDL=5.0psf; h=28ft; Cat. II; Exp C; Part. Encl., GCpi=0.55; C-C Exterior(2E) -3-0-11 to -0-0-11, Interior(1) -0-0-11 to 2-9-1, Exterior(2R) 2-9-1 to 19-7-15, Interior(1) 19-7-15 to 22-5-11, Exterior(2E) 22-5-11 to 25-5-11; Lumber DOL=1.60 plate grip DOL=1.60
3) Building Designer / Project engineer responsible for verifying applied roof live load shown covers rain loading requirements specific to the use of this truss component.
4) Provide adequate drainage to prevent water ponding.
5) This truss has been designed for a 10.0 psf bottom chord live load nonconcurrent with any other live loads.
6) Refer to girder(s) for truss to truss connections.
7) Provide mechanical connection (by others) of truss to bearing plate capable of withstanding 1725 lb uplift at joint 3 and 1802 lb uplift at joint 9.
8) All truss to truss connection by TCI are on the Truss Placement plan.
9) ARMANDO R. PEREZ PE. # 28026 Ph: (305) 882-8826

LOAD CASE(S) Standard

Job	Truss	Truss Type	Qty	Ply	12715 ROLLING ROAD DR, PINECREST, FL.
12715	H22	HIP	1	1	Job Reference (optional)

Trusscorp Int., 9590 NW 89 AVE, Medley, FL — 8.820 s Dec 4 2024 MiTek Industries, Inc. Thu Jun 5 12:42:50 2025 Page 1
ID:_GLN6EJBZ1GCD23RDL_tAxzKvJz-P?lGEAxsMXAw5NAhC2?vltBupclteMLd1mu43mz9LNp

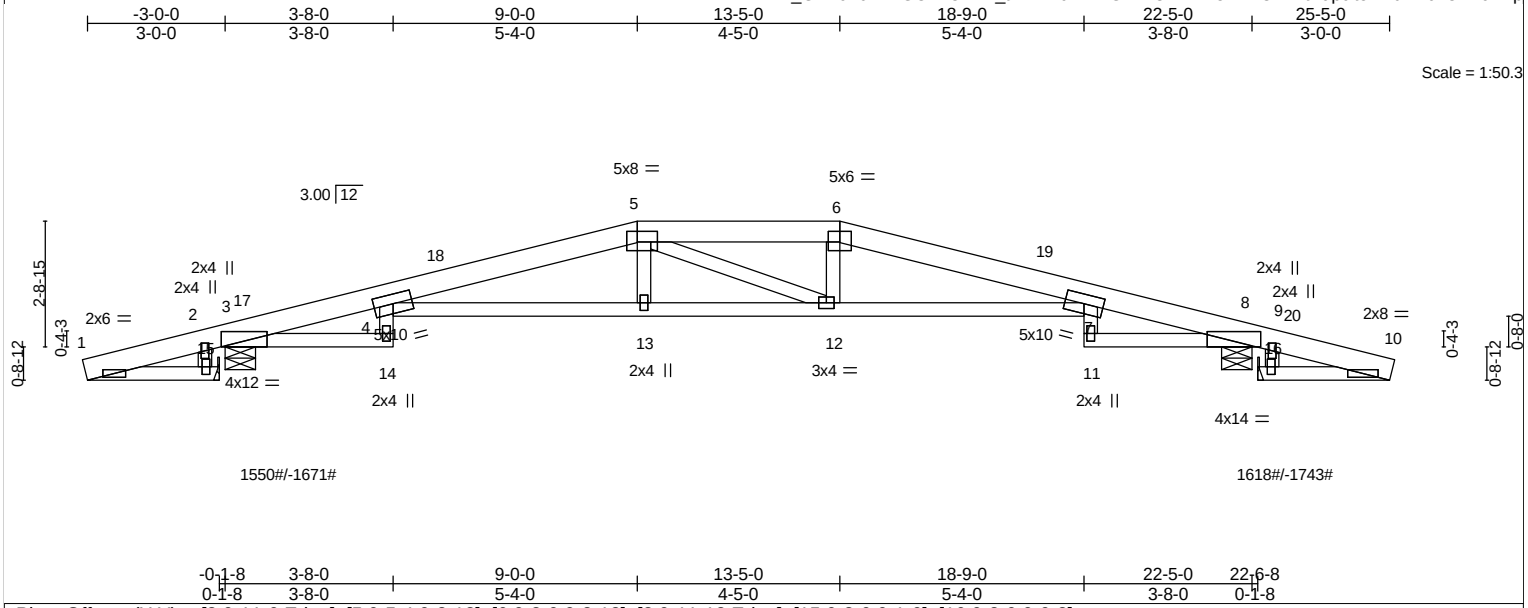

Plate Offsets (X,Y)-- [3:0-11-0,Edge], [5:0-5-4,0-2-12], [6:0-3-0,0-2-12], [8:0-11-12,Edge], [15:0-2-0,0-1-0], [16:0-2-0,0-0-8]

LOADING (psf)		**SPACING-**	2-0-0	**CSI.**		**DEFL.**	in	(loc)	l/defl	L/d	**PLATES**	**GRIP**
TCLL	30.0	Plate Grip DOL	1.33	TC	0.59	Vert(LL)	0.27	4-13	>955	360	MT20	244/190
TCDL	15.0	Lumber DOL	1.33	BC	0.40	Vert(CT)	-0.33	4-13	>793	180		
BCLL	0.0	Rep Stress Incr	YES	WB	0.57	Horz(CT)	0.11	8	n/a	n/a		
BCDL	10.0	Code FBC2020/TPI2014		Matrix-S							Weight: 124 lb	FT = 0%

LUMBER-
TOP CHORD 2x6 SP 2400F 2.0E *Except*
T2: 2x6 SP No.2
BOT CHORD 2x4 SP No.2 *Except*
B2: 2x4 SP No.3
WEBS 2x4 SP No.3
OTHERS 2x4 SP No.3

BRACING-
TOP CHORD Structural wood sheathing directly applied or 4-7-15 oc purlins.
BOT CHORD Rigid ceiling directly applied or 5-11-8 oc bracing.

MiTek recommends that Stabilizers and required cross bracing be installed during truss erection, in accordance with Stabilizer Installation guide.

REACTIONS. (lb/size) 3=1468/0-8-0 (min. 0-1-13), 8=1535/0-8-0 (min. 0-1-15), 15=-0/Mechanical, 16=0/Mechanical
Max Horz 3=-1099(LC 4), 15=633(LC 9), 16=-1631(LC 5)
Max Uplift3=-1671(LC 4), 8=-1743(LC 4)
Max Grav 3=1550(LC 5), 8=1618(LC 5)

FORCES. (lb) - Max. Comp./Max. Ten. - All forces 250 (lb) or less except when shown.
TOP CHORD 1-2=-604/444, 2-17=-648/548, 3-17=-648/548, 3-4=-1932/1916, 4-18=-2642/2821, 5-18=-2636/2831, 5-6=-2489/2713, 6-19=-2503/2696, 7-19=-2516/2686, 7-8=-1919/1902, 8-20=-1674/1646, 9-20=-1674/1646, 9-10=-1569/1502
BOT CHORD 4-13=-916/919, 12-13=-907/922, 7-12=-759/739
WEBS 5-12=-404/174, 1-15=-455/633, 10-16=-1554/1631

NOTES- (8-9)
1) Unbalanced roof live loads have been considered for this design.
2) Wind: ASCE 7-16; Vult=175mph (3-second gust) Vasd=136mph; HVHZ; TCDL=5.0psf; BCDL=5.0psf; h=28ft; Cat. II; Exp C; Part. Encl., GCpi=0.55; C-C Exterior(2E) -3-0-11 to -0-0-11, Interior(1) -0-0-11 to 4-9-1, Exterior(2R) 4-9-1 to 17-7-15, Interior(1) 17-7-15 to 22-5-11, Exterior(2E) 22-5-11 to 25-5-11; Lumber DOL=1.60 plate grip DOL=1.60
3) Building Designer / Project engineer responsible for verifying applied roof live load shown covers rain loading requirements specific to the use of this truss component.
4) Provide adequate drainage to prevent water ponding.
5) This truss has been designed for a 10.0 psf bottom chord live load nonconcurrent with any other live loads.
6) Refer to girder(s) for truss to truss connections.
7) Provide mechanical connection (by others) of truss to bearing plate capable of withstanding 1671 lb uplift at joint 3 and 1743 lb uplift at joint 8.
8) All truss to truss connection by TCI are on the Truss Placement plan.
9) ARMANDO R. PEREZ PE. # 28026 Ph: (305) 882-8826

LOAD CASE(S) Standard

Job	Truss	Truss Type	Qty	Ply	12715 ROLLING ROAD DR, PINECREST, FL.
12715	H23	HIP	1	1	Job Reference (optional)

Trusscorp Int., 9590 NW 89 AVE, Medley, FL

8.820 s Dec 4 2024 MiTek Industries, Inc. Thu Jun 5 12:42:52 2025 Page 1
ID:_GLN6EJBZ1GCD23RDL_tAxzKvJz-LOs0fsz6u9RdKhK4JT2NrIGEKQPh6FLwV4NB7ez9LNn

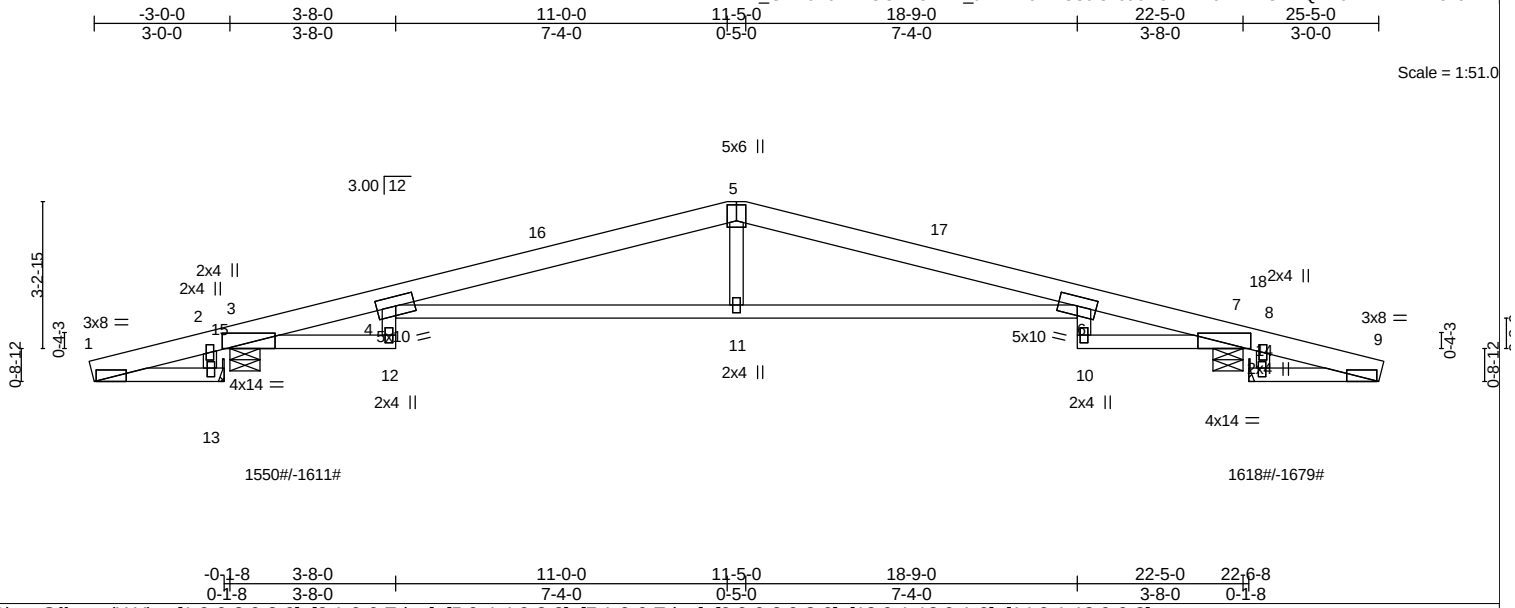

Plate Offsets (X,Y)-- [1:0-0-8,0-3-0], [3:1-0-0,Edge], [5:0-4-4,0-2-8], [7:1-0-0,Edge], [9:0-0-8,0-3-0], [13:0-1-12,0-1-0], [14:0-1-12,0-0-8]

LOADING (psf)		**SPACING-**	2-0-0	**CSI.**		**DEFL.**	in	(loc)	l/defl	L/d	**PLATES**	**GRIP**
TCLL	30.0	Plate Grip DOL	1.33	TC	0.59	Vert(LL)	0.30	4-11	>862	360	MT20	244/190
TCDL	15.0	Lumber DOL	1.33	BC	0.57	Vert(CT)	-0.41	4-11	>634	180		
BCLL	0.0	Rep Stress Incr	YES	WB	0.60	Horz(CT)	0.12	7	n/a	n/a		
BCDL	10.0	Code FBC2020/TPI2014		Matrix-S							Weight: 117 lb	FT = 0%

LUMBER-
TOP CHORD 2x6 SP 2400F 2.0E
BOT CHORD 2x4 SP No.2 *Except*
B2: 2x4 SP No.3
WEBS 2x4 SP No.3
OTHERS 2x4 SP No.3

BRACING-
TOP CHORD Structural wood sheathing directly applied or 5-9-6 oc purlins.
BOT CHORD Rigid ceiling directly applied or 6-0-0 oc bracing.

MiTek recommends that Stabilizers and required cross bracing be installed during truss erection, in accordance with Stabilizer Installation guide.

REACTIONS. (lb/size) 3=1468/0-8-0 (min. 0-1-13), 7=1534/0-8-0 (min. 0-1-15), 13=0/Mechanical, 14=0/Mechanical
Max Horz 3=-1035(LC 4), 13=781(LC 9), 14=-1727(LC 5)
Max Uplift3=-1611(LC 4), 7=-1679(LC 4)
Max Grav 3=1550(LC 5), 7=1618(LC 5)

FORCES. (lb) - Max. Comp./Max. Ten. - All forces 250 (lb) or less except when shown.
TOP CHORD 1-2=-746/503, 2-15=-782/609, 3-15=-782/609, 3-4=-2018/1891, 4-16=-2201/2204, 5-16=-2181/2215, 5-17=-2196/2230, 6-17=-2215/2219, 6-7=-2005/1878, 7-18=-1770/1644, 8-18=-1770/1644, 8-9=-1661/1500
BOT CHORD 4-11=-279/331, 6-11=-279/331
WEBS 5-11=0/342, 1-13=-516/781, 9-14=-1552/1727

NOTES- (7-8)
1) Unbalanced roof live loads have been considered for this design.
2) Wind: ASCE 7-16; Vult=175mph (3-second gust) Vasd=136mph; HVHZ; TCDL=5.0psf; BCDL=5.0psf; h=28ft; Cat. II; Exp C; Part. Encl., GCpi=0.55; C-C Exterior(2E) -3-0-11 to -0-0-11, Interior(1) -0-0-11 to 6-11-9, Exterior(2R) 6-11-9 to 15-5-7, Interior(1) 15-5-7 to 22-5-11, Exterior(2E) 22-5-11 to 25-5-11; Lumber DOL=1.60 plate grip DOL=1.60
3) Building Designer / Project engineer responsible for verifying applied roof live load shown covers rain loading requirements specific to the use of this truss component.
4) This truss has been designed for a 10.0 psf bottom chord live load nonconcurrent with any other live loads.
5) Refer to girder(s) for truss to truss connections.
6) Provide mechanical connection (by others) of truss to bearing plate capable of withstanding 1611 lb uplift at joint 3 and 1679 lb uplift at joint 7.
7) All truss to truss connection by TCI are on the Truss Placement plan.
8) ARMANDO R. PEREZ PE. # 28026 Ph: (305) 882-8826

LOAD CASE(S) Standard

Job	Truss	Truss Type	Qty	Ply	12715 ROLLING ROAD DR, PINECREST, FL.
12715	HG1	Hip Girder	1	2	Job Reference (optional)

Trusscorp Int., 9590 NW 89 AVE, Medley, FL — 8.820 s Dec 4 2024 MiTek Industries, Inc. Thu Jun 5 12:42:55 2025 Page 1
ID:_GLN6EJBZ1GCD23RDL_tAxzKvJz-mzY9Ht?_B3pCB83f?bb4SwugudQwJgSMB2brkzz9LNk

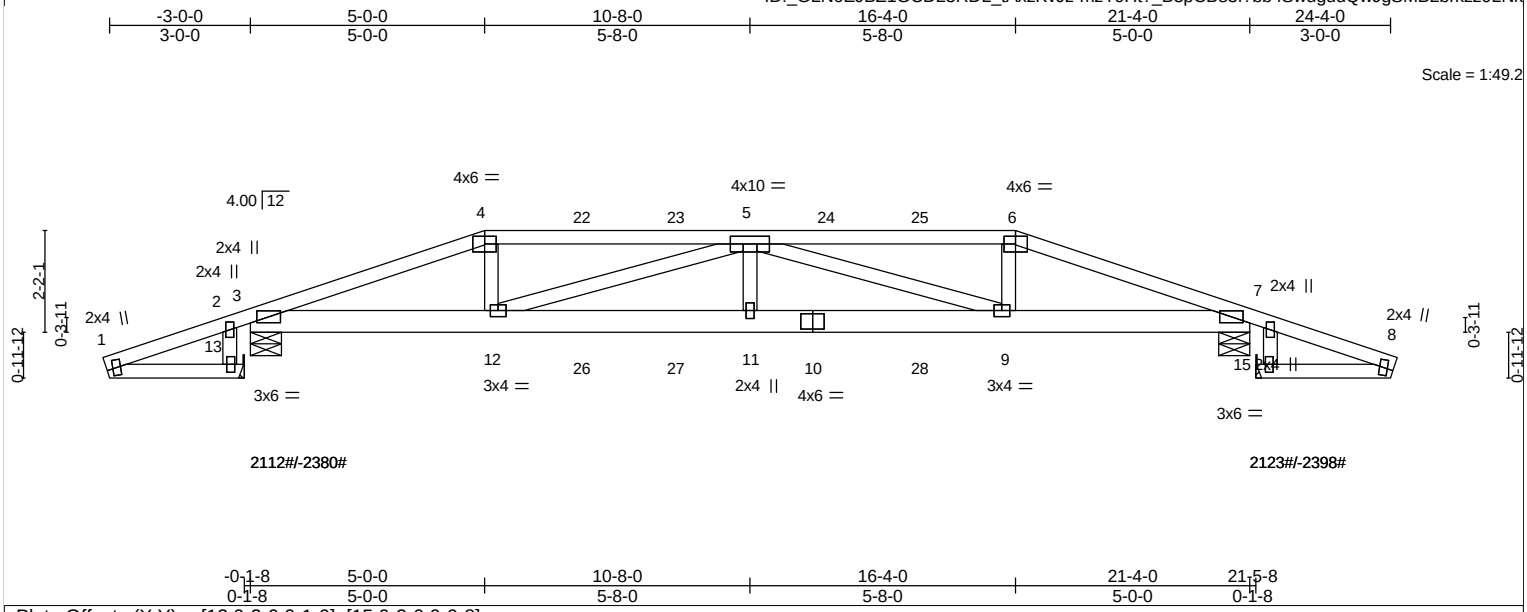

Plate Offsets (X,Y)-- [13:0-2-0,0-1-0], [15:0-2-0,0-0-8]

LOADING (psf)		SPACING-	2-0-0	CSI.		DEFL.	in	(loc)	l/defl	L/d	PLATES	GRIP
TCLL	30.0	Plate Grip DOL	1.33	TC	0.95	Vert(LL)	0.31	11	>825	360	MT20	244/190
TCDL	15.0	Lumber DOL	1.33	BC	0.60	Vert(CT)	-0.27	11	>951	180		
BCLL	0.0	Rep Stress Incr	NO	WB	0.32	Horz(CT)	-0.06	7	n/a	n/a		
BCDL	10.0	Code FBC2020/TPI2014		Matrix-MSH							Weight: 251 lb	FT = 0%

LUMBER-
TOP CHORD 2x4 SP No.2
BOT CHORD 2x6 SP No.2
WEBS 2x4 SP No.3
OTHERS 2x4 SP No.3

BRACING-
TOP CHORD Structural wood sheathing directly applied or 5-5-11 oc purlins.
BOT CHORD Rigid ceiling directly applied or 6-0-8 oc bracing.

REACTIONS. (lb/size) 3=2112/0-8-0 (min. 0-1-8), 13=-0/Mechanical, 15=0/Mechanical, 7=2123/0-8-0 (min. 0-1-8)
Max Horz 3=-384(LC 13), 13=384(LC 13)
Max Uplift3=-2380(LC 4), 7=-2398(LC 4)
Max Grav 3=2112(LC 1), 7=2123(LC 1)

FORCES. (lb) - Max. Comp./Max. Ten. - All forces 250 (lb) or less except when shown.
TOP CHORD 1-2=-357/277, 2-3=-356/288, 3-4=-4415/5091, 4-22=-4191/4968, 22-23=-4191/4968, 5-23=-4191/4968, 5-24=-4141/4894, 24-25=-4141/4894, 6-25=-4141/4894, 6-7=-4364/5016
BOT CHORD 3-12=-4584/4122, 12-26=-6651/5926, 26-27=-6651/5926, 11-27=-6651/5926, 10-11=-6651/5926, 10-28=-6651/5926, 9-28=-6651/5926, 7-9=-4510/4073
WEBS 4-12=-851/865, 5-12=-1920/2101, 5-11=-40/399, 5-9=-1924/2180, 6-9=-835/875, 1-13=-273/385

NOTES- (11-12)
1) 2-ply truss to be connected together with 16d (0.131"x 3.5") nails as follows:
Top chords connected as follows: 2x4 - 1 row at 0-9-0 oc clinched.
Bottom chords connected as follows: 2x6 - 2 rows staggered at 0-9-0 oc clinched.
Webs connected as follows: 2x4 - 1 row at 0-9-0 oc clinched.
2) All loads are considered equally applied to all plies, except if noted as front (F) or back (B) face in the LOAD CASE(S) section. Ply to ply connections have been provided to distribute only loads noted as (F) or (B), unless otherwise indicated.
3) Unbalanced roof live loads have been considered for this design.
4) Wind: ASCE 7-16; Vult=175mph (3-second gust) Vasd=136mph; HVHZ; TCDL=5.0psf; BCDL=5.0psf; h=28ft; Cat. II; Exp C; Encl., GCpi=0.18; C-C Exterior(2E) -3-1-3 to 0-0-0, Interior(1) 0-0-0 to 0-9-1, Exterior(2R) 0-9-1 to 9-2-15, Interior(1) 9-2-15 to 12-1-1, Exterior(2R) 12-1-1 to 20-6-9, Interior(1) 20-6-9 to 21-4-0, Exterior(2E) 21-4-0 to 24-5-3; Lumber DOL=1.60 plate grip DOL=1.60
5) Building Designer / Project engineer responsible for verifying applied roof live load shown covers rain loading requirements specific to the use of this truss component.
6) Provide adequate drainage to prevent water ponding.
7) This truss has been designed for a 10.0 psf bottom chord live load nonconcurrent with any other live loads.
8) Refer to girder(s) for truss to truss connections.
9) Provide mechanical connection (by others) of truss to bearing plate capable of withstanding 2380 lb uplift at joint 3 and 2398 lb uplift at joint 7.
10) Hanger(s) or other connection device(s) shall be provided sufficient to support concentrated load(s) 276 lb down and 337 lb up at 5-0-0, 276 lb down and 337 lb up at 7-0-12, 263 lb down and 337 lb up at 9-0-12, 245 lb down and 337 lb up at 10-8-0, 263 lb down and 337 lb up at 12-3-4, and 276 lb down and 337 lb up at 14-3-4, and 276 lb down and 337 lb up at 16-4-0 on top chord, and 367 lb down and 432 lb up at 5-0-0, 43 lb down and 22 lb up at 7-0-12, 43 lb down and 22 lb up at 9-0-12, 43 lb down and 22 lb up at 10-8-0, 43 lb down and 22 lb up at 12-3-4, and 43 lb down and 22 lb up at 14-3-4, and 367 lb down and 432 lb up at 16-3-4 on bottom chord. The design/selection of such connection device(s) is the responsibility of others.
11) All truss to truss connection by TCI are on the Truss Placement plan.
12) ARMANDO R. PEREZ PE. # 28026 Ph: (305) 882-8826

LOAD CASE(S) Standard
1) Dead + Roof Live (balanced): Lumber Increase=1.33, Plate Increase=1.33

Continued on page 2

LOAD CASE(S) Standard

Uniform Loads (plf)

Vert: 1-4=-90, 4-6=-90, 6-8=-90, 16-19=-20

Concentrated Loads (lb)

Vert: 4=-85(B) 6=-85(B) 10=-30(B) 12=-294(B) 11=-30(B) 9=-294(B) 5=-85(B) 22=-85(B) 23=-85(B) 24=-85(B) 25=-85(B) 26=-30(B) 27=-30(B) 28=-30(B)

Job	Truss	Truss Type	Qty	Ply	12715 ROLLING ROAD DR, PINECREST, FL.
12715	HG2T	HIP GIRDER	1	2	Job Reference (optional)

Trusscorp Int., 9590 NW 89 AVE, Medley, FL

8.820 s Dec 4 2024 MiTek Industries, Inc. Thu Jun 5 12:42:58 2025 Page 1
ID:_GLN6EJBZ1GCD23RDL_tAxzKvJz-AYDIwv1tU_Bn2cnDgj9n4ZWIIqUHWzFot0qVLIz9LNh

-3-0-0	7-0-0	11-7-1	16-1-6	21-1-8	28-1-8
3-0-0	7-0-0	4-7-1	4-6-5	5-0-2	7-0-0

Scale = 1:53.9

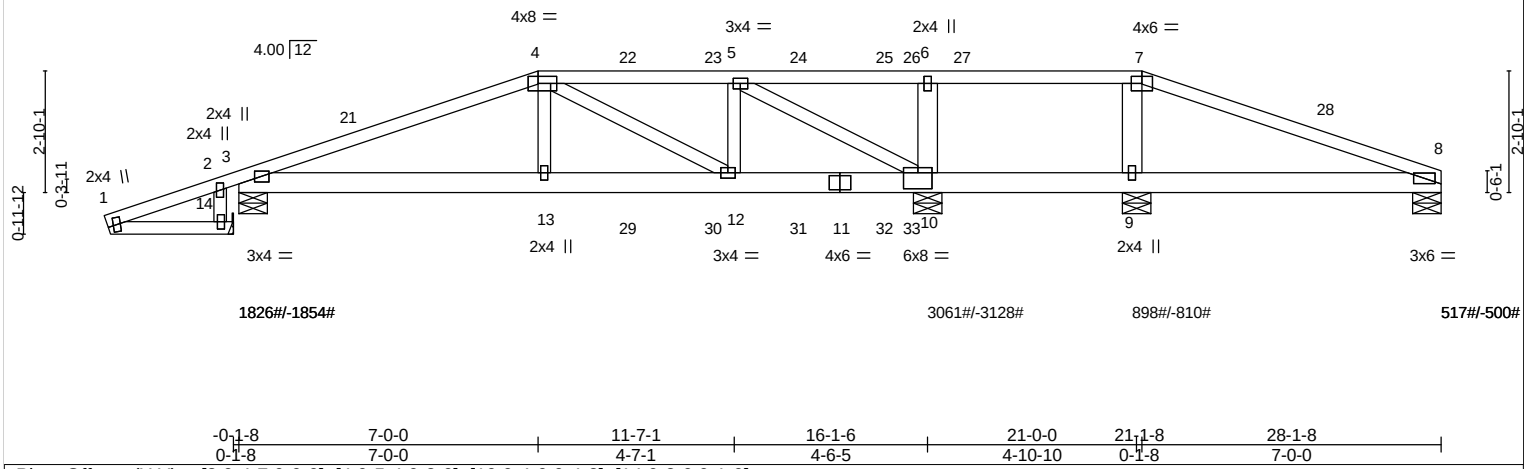

-0-1-8	7-0-0	11-7-1	16-1-6	21-0-0	21-1-8	28-1-8
0-1-8	7-0-0	4-7-1	4-6-5	4-10-10	0-1-8	7-0-0

Plate Offsets (X,Y)-- [3:0-4-7,0-0-9], [4:0-5-4,0-2-0], [10:0-4-0,0-4-8], [14:0-2-0,0-1-0]

LOADING (psf)		**SPACING-**	2-0-0	**CSI.**		**DEFL.**	in	(loc)	l/defl	L/d	**PLATES**	**GRIP**
TCLL	30.0	Plate Grip DOL	1.33	TC	0.49	Vert(LL)	0.12	12-13	>999	360	MT20	244/190
TCDL	15.0	Lumber DOL	1.33	BC	0.43	Vert(CT)	-0.10	12-13	>999	180		
BCLL	0.0	Rep Stress Incr	NO	WB	0.58	Horz(CT)	-0.03	10	n/a	n/a		
BCDL	10.0	Code FBC2020/TPI2014		Matrix-MSH							Weight: 298 lb	FT = 0%

LUMBER-
TOP CHORD 2x4 SP No.2 *Except*
T1: 2x4 SP No.1
BOT CHORD 2x6 SP No.2
WEBS 2x4 SP No.3 *Except*
W2: 2x6 SP No.2
OTHERS 2x4 SP No.3

BRACING-
TOP CHORD Structural wood sheathing directly applied or 6-0-0 oc purlins.
BOT CHORD Rigid ceiling directly applied or 6-0-0 oc bracing.

REACTIONS. All bearings 0-8-0 except (jt=length) 14=Mechanical.
(lb) - Max Horz 3=163(LC 16), 14=253(LC 20)
Max Uplift All uplift 100 lb or less at joint(s) except 8=-500(LC 20), 3=-1854(LC 4), 10=-3128(LC 4), 9=-810(LC 4)
Max Grav All reactions 250 lb or less at joint(s) except 8=517(LC 5), 3=1826(LC 1), 10=3061(LC 9), 9=898(LC 1)

FORCES. (lb) - Max. Comp./Max. Ten. - All forces 250 (lb) or less except when shown.
TOP CHORD 3-21=-3518/3744, 4-21=-3418/3762, 4-22=-2386/2675, 22-23=-2386/2675, 5-23=-2386/2675, 5-24=-783/844, 24-25=-783/844, 25-26=-783/844, 6-26=-783/844, 6-27=-783/844, 7-27=-783/844, 7-28=-813/868, 8-28=-831/830
BOT CHORD 3-13=-3398/3242, 13-29=-3471/3308, 29-30=-3471/3308, 12-30=-3471/3308, 12-31=-2412/2386, 11-31=-2412/2386, 11-32=-2412/2386, 32-33=-2412/2386, 10-33=-2412/2386, 9-10=-844/997, 8-9=-792/921
WEBS 4-13=-1226/1241, 6-10=-418/502, 7-9=-730/818, 5-10=-3606/3881, 4-12=-1088/1201, 5-12=-1437/1383, 1-14=-163/254

NOTES- (11-12)
1) 2-ply truss to be connected together with 16d (0.131"x 3.5") nails as follows:
Top chords connected as follows: 2x4 - 1 row at 0-9-0 oc clinched.
Bottom chords connected as follows: 2x6 - 2 rows staggered at 0-9-0 oc clinched.
Webs connected as follows: 2x4 - 1 row at 0-9-0 oc clinched, 2x6 - 2 rows staggered at 0-9-0 oc clinched.
2) All loads are considered equally applied to all plies, except if noted as front (F) or back (B) face in the LOAD CASE(S) section. Ply to ply connections have been provided to distribute only loads noted as (F) or (B), unless otherwise indicated.
3) Unbalanced roof live loads have been considered for this design.
4) Wind: ASCE 7-16; Vult=175mph (3-second gust) Vasd=136mph; HVHZ; TCDL=5.0psf; BCDL=5.0psf; h=28ft; Cat. II; Exp C; Encl., GCpi=0.18; C-C Exterior(2E) -3-1-3 to 0-0-0, Interior(1) 0-0-0 to 2-9-1, Exterior(2R) 2-9-1 to 11-2-15, Interior(1) 11-2-15 to 16-10-9, Exterior(2R) 16-10-9 to 25-1-8, Exterior(2E) 25-1-8 to 28-1-8; porch left exposed; Lumber DOL=1.60 plate grip DOL=1.60
5) Building Designer / Project engineer responsible for verifying applied roof live load shown covers rain loading requirements specific to the use of this truss component.
6) Provide adequate drainage to prevent water ponding.
7) This truss has been designed for a 10.0 psf bottom chord live load nonconcurrent with any other live loads.
8) Refer to girder(s) for truss to truss connections.
9) Provide mechanical connection (by others) of truss to bearing plate capable of withstanding 500 lb uplift at joint 8, 1854 lb uplift at joint 3, 3128 lb uplift at joint 10 and 810 lb uplift at joint 9.
10) Hanger(s) or other connection device(s) shall be provided sufficient to support concentrated load(s) 143 lb down and 148 lb up at 7-0-0, 143 lb down and 148 lb up at 9-0-12, 133 lb down and 148 lb up at 11-0-12, 110 lb down and 137 lb up at 13-0-12, and 84 lb down and 117 lb up at 15-0-12, and 85 lb down and 103 lb up at 15-8-8 on top chord, and 983 lb down and 1121 lb up at 7-0-0, 351 lb down and 398 lb up at 9-0-12, 351 lb down and 398 lb up at 11-0-12, 314 lb down and 340 lb up at 13-0-12, and 362 lb down and 397 lb up at 15-0-12, and 367 lb down and 376 lb up at 15-8-8 on bottom chord. The design/selection of such connection device(s) is the responsibility of others.
11) All truss to truss connection by TCI are on the Truss Placement plan.
12) ARMANDO R. PEREZ PE. # 28026 Ph: (305) 882-8826

Continued on page 2

LOAD CASE(S) Standard

1) Dead + Roof Live (balanced): Lumber Increase=1.33, Plate Increase=1.33
   Uniform Loads (plf)
   Vert: 1-4=-90, 4-7=-90, 7-8=-90, 15-18=-20
   Concentrated Loads (lb)
   Vert: 13=-862(F) 25=39(F) 26=40(F) 29=-311(F) 30=-311(F) 31=-314(F) 32=-362(F) 33=-367(F)

Job	Truss	Truss Type	Qty	Ply	12715 ROLLING ROAD DR, PINECREST, FL.
12715	HG3A	Hip Girder	1	2	Job Reference (optional)

Trusscorp Int., 9590 NW 89 AVE, Medley, FL

8.820 s Dec 4 2024 MiTek Industries, Inc. Thu Jun 5 12:43:01 2025 Page 1
ID:_GLN6EJBZ1GCD23RDL_tAxzKvJz-a7vQYx4lnvZMv3WoLsiUiB8hn2PCjQCFZ_2Aydz9LNe

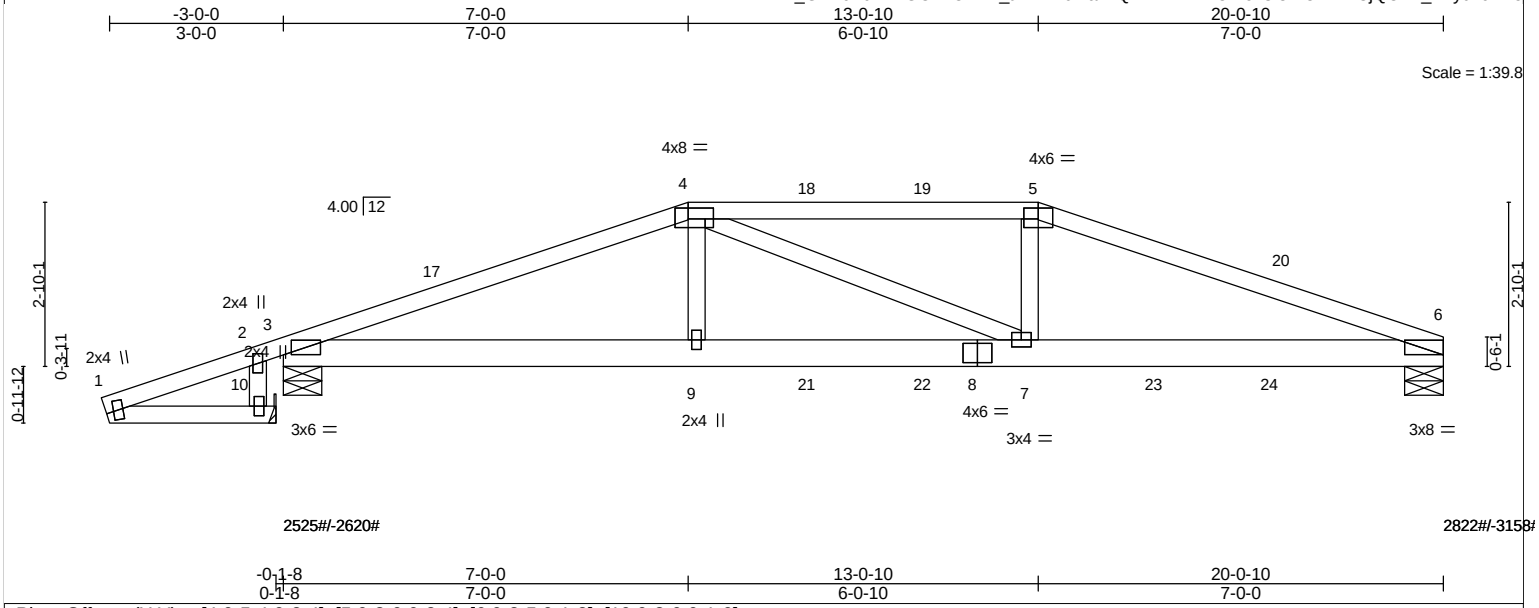

Plate Offsets (X,Y)-- [4:0-5-4,0-2-4], [5:0-3-0,0-2-4], [6:0-3-5,0-1-8], [10:0-2-0,0-1-0]

LOADING (psf)		SPACING-	2-0-0	CSI.		DEFL.	in	(loc)	l/defl	L/d	PLATES	GRIP
TCLL	30.0	Plate Grip DOL	1.33	TC	0.99	Vert(LL)	0.27	7-9	>899	360	MT20	244/190
TCDL	15.0	Lumber DOL	1.33	BC	0.86	Vert(CT)	-0.24	7-9	>995	180		
BCLL	0.0	Rep Stress Incr	NO	WB	0.24	Horz(CT)	-0.05	6	n/a	n/a		
BCDL	10.0	Code FBC2020/TPI2014		Matrix-MSH							Weight: 207 lb	FT = 0%

LUMBER-
TOP CHORD 2x4 SP No.2
BOT CHORD 2x6 SP No.2
WEBS 2x4 SP No.3
OTHERS 2x4 SP No.3

BRACING-
TOP CHORD Structural wood sheathing directly applied or 3-11-2 oc purlins.
BOT CHORD Rigid ceiling directly applied or 5-7-4 oc bracing.

REACTIONS. (lb/size) 6=2822/0-8-0 (min. 0-1-11), 3=2525/0-8-0 (min. 0-1-8), 10=0/Mechanical
Max Horz 3=-190(LC 20), 10=288(LC 20)
Max Uplift6=-3158(LC 4), 3=-2620(LC 4)
Max Grav 6=2822(LC 1), 3=2525(LC 1)

FORCES. (lb) - Max. Comp./Max. Ten. - All forces 250 (lb) or less except when shown.
TOP CHORD 1-2=-267/221, 2-3=-264/237, 3-17=-5588/5869, 4-17=-5487/5887, 4-18=-5532/6234, 18-19=-5532/6234, 5-19=-5532/6234, 5-20=-5751/6366, 6-20=-5839/6354
BOT CHORD 3-9=-5400/5203, 9-21=-5458/5271, 21-22=-5458/5271, 8-22=-5458/5271, 7-8=-5458/5271, 7-23=-5872/5454, 23-24=-5872/5454, 6-24=-5872/5454
WEBS 4-9=-990/1162, 4-7=-530/507, 5-7=-1266/1358, 1-10=-157/288

NOTES- (11-12)
1) 2-ply truss to be connected together with 16d (0.131"x 3.5") nails as follows:
Top chords connected as follows: 2x4 - 1 row at 0-9-0 oc clinched.
Bottom chords connected as follows: 2x6 - 2 rows staggered at 0-9-0 oc clinched.
Webs connected as follows: 2x4 - 1 row at 0-9-0 oc clinched.
2) All loads are considered equally applied to all plies, except if noted as front (F) or back (B) face in the LOAD CASE(S) section. Ply to ply connections have been provided to distribute only loads noted as (F) or (B), unless otherwise indicated.
3) Unbalanced roof live loads have been considered for this design.
4) Wind: ASCE 7-16; Vult=175mph (3-second gust) Vasd=136mph; HVHZ; TCDL=5.0psf; BCDL=5.0psf; h=28ft; Cat. II; Exp C; Encl., GCpi=0.18; C-C Exterior(2E) -3-1-3 to 0-0-0, Interior(1) 0-0-0 to 2-9-1, Exterior(2R) 2-9-1 to 17-0-10, Exterior(2E) 17-0-10 to 20-0-10; Lumber DOL=1.60 plate grip DOL=1.60
5) Building Designer / Project engineer responsible for verifying applied roof live load shown covers rain loading requirements specific to the use of this truss component.
6) Provide adequate drainage to prevent water ponding.
7) This truss has been designed for a 10.0 psf bottom chord live load nonconcurrent with any other live loads.
8) Refer to girder(s) for truss to truss connections.
9) Provide mechanical connection (by others) of truss to bearing plate capable of withstanding 3158 lb uplift at joint 6 and 2620 lb uplift at joint 3.
10) Hanger(s) or other connection device(s) shall be provided sufficient to support concentrated load(s) 145 lb down and 139 lb up at 7-0-0, 145 lb down and 139 lb up at 9-0-12, and 129 lb down and 133 lb up at 11-0-12, and 117 lb down and 95 lb up at 13-0-10 on top chord, and 862 lb down and 956 lb up at 7-0-0, 311 lb down and 335 lb up at 9-0-12, 324 lb down and 351 lb up at 11-0-12 , 366 lb down and 390 lb up at 13-0-12, 357 lb down and 478 lb up at 15-0-12, and 357 lb down and 478 lb up at 17-0-12, and 357 lb down and 478 lb up at 19-0-12 on bottom chord. The design/selection of such connection device(s) is the responsibility of others.
11) All truss to truss connection by TCI are on the Truss Placement plan.
12) ARMANDO R. PEREZ PE. # 28026 Ph: (305) 882-8826

LOAD CASE(S) Standard
1) Dead + Roof Live (balanced): Lumber Increase=1.33, Plate Increase=1.33

Continued on page 2

LOAD CASE(S) Standard

Uniform Loads (plf)

Vert: 1-4=-90, 4-5=-90, 5-6=-90, 11-14=-20

Concentrated Loads (lb)

Vert: 5=39(B) 9=-862(B) 7=-366(B) 13=-357(B) 19=33(B) 21=-311(B) 22=-324(B) 23=-357(B) 24=-357(B)

Job	Truss	Truss Type	Qty	Ply	12715 ROLLING ROAD DR, PINECREST, FL.
12715	HG3T	HIP GIRDER	1	2	Job Reference (optional)

Trusscorp Int., 9590 NW 89 AVE, Medley, FL

8.820 s Dec 4 2024 MiTek Industries, Inc. Thu Jun 5 12:43:04 2025 Page 1
ID:_GLN6EJBZ1GCD23RDL_tAxzKvJz-?ibZAy6e3qxwmXFN0_FBKqmB6FV9wmzhFyHqZyz9LNb

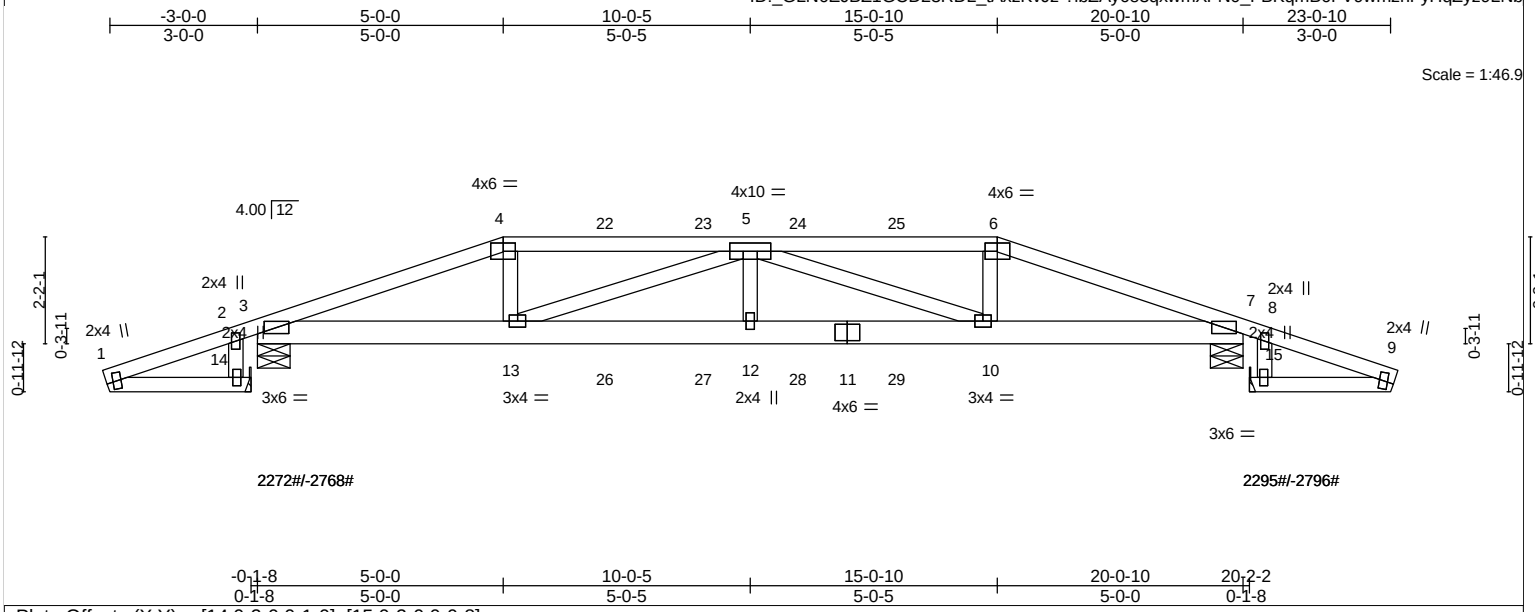

Plate Offsets (X,Y)-- [14:0-2-0,0-1-0], [15:0-2-0,0-0-8]

LOADING (psf)		SPACING-	2-0-0	CSI.		DEFL.	in	(loc)	l/defl	L/d	PLATES	GRIP
TCLL	30.0	Plate Grip DOL	1.33	TC	0.98	Vert(LL)	0.28	12	>856	360	MT20	244/190
TCDL	15.0	Lumber DOL	1.33	BC	0.52	Vert(CT)	0.24	12	>986	180		
BCLL	0.0	Rep Stress Incr	NO	WB	0.31	Horz(CT)	-0.05	7	n/a	n/a		
BCDL	10.0	Code FBC2020/TPI2014		Matrix-MSH							Weight: 238 lb	FT = 0%

LUMBER-
TOP CHORD 2x4 SP No.2
BOT CHORD 2x6 SP No.2
WEBS 2x4 SP No.3
OTHERS 2x4 SP No.3

BRACING-
TOP CHORD Structural wood sheathing directly applied or 5-6-1 oc purlins.
BOT CHORD Rigid ceiling directly applied or 5-10-9 oc bracing.

REACTIONS. (lb/size) 3=2001/0-8-0 (min. 0-1-8), 14=-0/Mechanical, 15=0/Mechanical, 7=2021/0-8-0 (min. 0-1-8)
Max Horz 3=342(LC 9), 14=466(LC 13), 15=-542(LC 13)
Max Uplift3=-2768(LC 4), 7=-2796(LC 4)
Max Grav 3=2272(LC 14), 7=2295(LC 14)

FORCES. (lb) - Max. Comp./Max. Ten. - All forces 250 (lb) or less except when shown.
TOP CHORD 1-2=-433/344, 2-3=-434/357, 3-4=-4718/5655, 4-22=-4568/5529, 22-23=-4568/5529, 5-23=-4568/5529, 5-24=-4481/5424, 24-25=-4481/5424, 6-25=-4481/5424, 6-7=-4631/5551, 7-8=-506/465, 8-9=-504/450
BOT CHORD 3-13=-5063/4248, 13-26=-6969/5828, 26-27=-6969/5828, 12-27=-6969/5828, 12-28=-6969/5828, 11-28=-6969/5828, 11-29=-6969/5828, 10-29=-6969/5828, 7-10=-4960/4162
WEBS 4-13=-942/941, 5-13=-1603/1950, 5-12=-90/357, 5-10=-1696/2061, 6-10=-920/923, 1-14=-346/467, 9-15=-460/543

NOTES- (11-12)
1) 2-ply truss to be connected together with 16d (0.131"x 3.5") nails as follows:
Top chords connected as follows: 2x4 - 1 row at 0-9-0 oc clinched.
Bottom chords connected as follows: 2x6 - 2 rows staggered at 0-9-0 oc clinched.
Webs connected as follows: 2x4 - 1 row at 0-9-0 oc clinched.
2) All loads are considered equally applied to all plies, except if noted as front (F) or back (B) face in the LOAD CASE(S) section. Ply to ply connections have been provided to distribute only loads noted as (F) or (B), unless otherwise indicated.
3) Unbalanced roof live loads have been considered for this design.
4) Wind: ASCE 7-16; Vult=175mph (3-second gust) Vasd=136mph; HVHZ; TCDL=5.0psf; BCDL=5.0psf; h=28ft; Cat. II; Exp C; Part. Encl., GCpi=0.55; C-C Exterior(2E) -3-1-3 to 0-0-0, Interior(1) 0-0-0 to 0-9-1, Exterior(2R) 0-9-1 to 9-2-15, Interior(1) 9-2-15 to 10-9-11, Exterior(2R) 10-9-11 to 19-3-3, Interior(1) 19-3-3 to 20-0-10, Exterior(2E) 20-0-10 to 23-1-13; Lumber DOL=1.60 plate grip DOL=1.60
5) Building Designer / Project engineer responsible for verifying applied roof live load shown covers rain loading requirements specific to the use of this truss component.
6) Provide adequate drainage to prevent water ponding.
7) This truss has been designed for a 10.0 psf bottom chord live load nonconcurrent with any other live loads.
8) Refer to girder(s) for truss to truss connections.
9) Provide mechanical connection (by others) of truss to bearing plate capable of withstanding 2768 lb uplift at joint 3 and 2796 lb uplift at joint 7.
10) Hanger(s) or other connection device(s) shall be provided sufficient to support concentrated load(s) 351 lb down and 408 lb up at 5-0-0, 351 lb down and 408 lb up at 7-0-12, 337 lb down and 408 lb up at 9-0-12, 337 lb down and 408 lb up at 10-11-14, and 351 lb down and 408 lb up at 12-11-14, and 351 lb down and 408 lb up at 15-0-10 on top chord, and 450 lb down and 521 lb up at 5-0-0, 44 lb down and 25 lb up at 7-0-12, 44 lb down and 25 lb up at 9-0-12, 44 lb down and 25 lb up at 10-11-14, and 44 lb down and 25 lb up at 12-11-14, and 450 lb down and 521 lb up at 14-11-14 on bottom chord. The design/selection of such connection device(s) is the responsibility of others.
11) All truss to truss connection by TCI are on the Truss Placement plan.
12) ARMANDO R. PEREZ PE. # 28026 Ph: (305) 882-8826

LOAD CASE(S) Standard

Continued on page 2

LOAD CASE(S) Standard

1) Dead + Roof Live (balanced): Lumber Increase=1.33, Plate Increase=1.33
   Uniform Loads (plf)
      Vert: 1-4=-90, 4-6=-90, 6-9=-90, 16-19=-20
   Concentrated Loads (lb)
      Vert: 4=-85(F) 6=-85(F) 13=-315(F) 10=-315(F) 22=-85(F) 23=-85(F) 24=-85(F) 25=-85(F) 26=-30(F) 27=-30(F) 28=-30(F) 29=-30(F)

Job	Truss	Truss Type	Qty	Ply	12715 ROLLING ROAD DR, PINECREST, FL.
12715	HG4T	HIP GIRDER	1	2	Job Reference (optional)

Trusscorp Int., 9590 NW 89 AVE, Medley, FL

8.820 s Dec 4 2024 MiTek Industries, Inc. Thu Jun 5 12:43:06 2025 Page 1
ID:_GLN6EJBZ1GCD23RDL_tAxzKvJz-x4iJbe7ubSBe0rOm8PIfPFrbT3CoOhf_jGmwdqz9LNZ

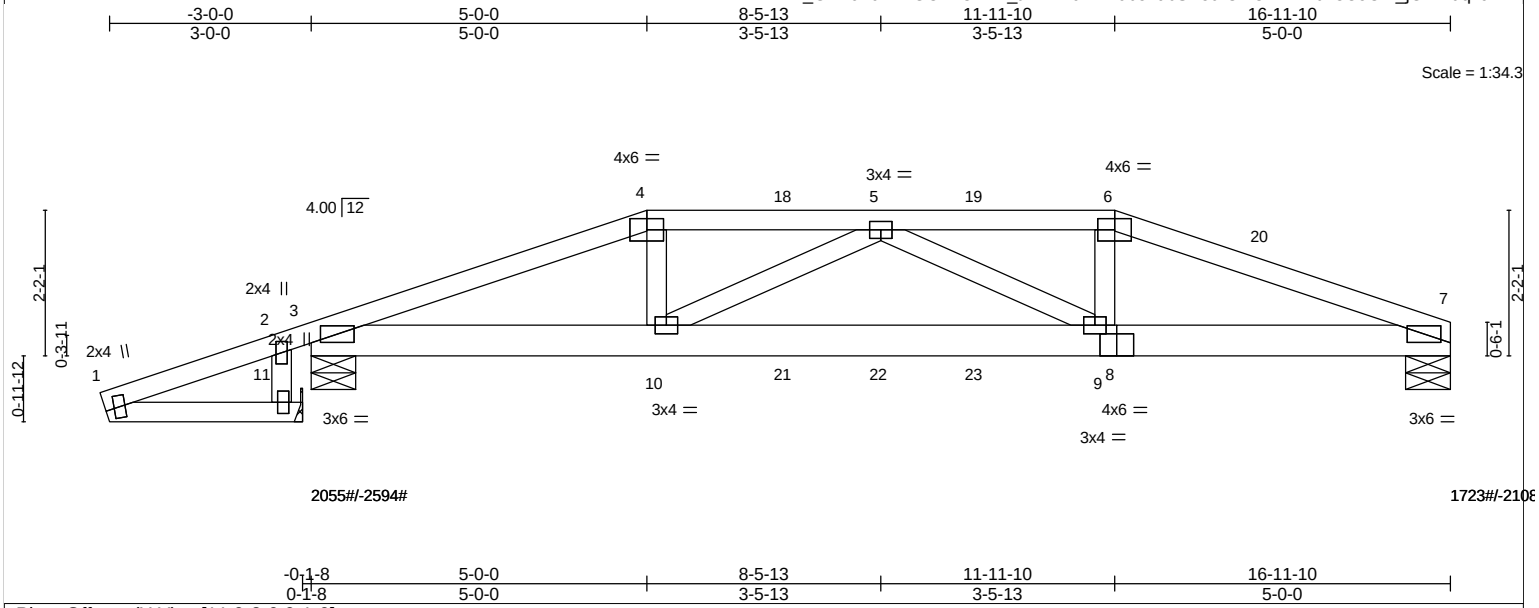

Plate Offsets (X,Y)-- [11:0-2-0,0-1-0]

LOADING (psf)		SPACING-	2-0-0	CSI.		DEFL.	in	(loc)	l/defl	L/d	PLATES	GRIP
TCLL	30.0	Plate Grip DOL	1.33	TC	0.74	Vert(LL)	0.20	9-10	>999	360	MT20	244/190
TCDL	15.0	Lumber DOL	1.33	BC	0.45	Vert(CT)	0.17	9-10	>999	180		
BCLL	0.0	Rep Stress Incr	NO	WB	0.17	Horz(CT)	-0.04	7	n/a	n/a		
BCDL	10.0	Code FBC2020/TPI2014		Matrix-MSH							Weight: 182 lb	FT = 0%

LUMBER-
TOP CHORD 2x4 SP No.2
BOT CHORD 2x6 SP No.2
WEBS 2x4 SP No.3
OTHERS 2x4 SP No.3

BRACING-
TOP CHORD Structural wood sheathing directly applied or 6-0-0 oc purlins.
BOT CHORD Rigid ceiling directly applied or 6-6-12 oc bracing.

REACTIONS. (lb/size) 7=1490/0-8-0 (min. 0-1-8), 3=1799/0-8-0 (min. 0-1-8), 11=-0/Mechanical
Max Horz 3=-317(LC 13), 11=474(LC 13)
Max Uplift 7=-2108(LC 4), 3=-2594(LC 4)
Max Grav 7=1723(LC 14), 3=2055(LC 14)

FORCES. (lb) - Max. Comp./Max. Ten. - All forces 250 (lb) or less except when shown.
TOP CHORD 1-2=-441/335, 2-3=-442/345, 3-4=-4147/5057, 4-18=-4016/4957, 5-18=-4016/4957, 5-19=-4115/5087, 6-19=-4115/5087, 6-20=-4223/5188, 7-20=-4246/5182
BOT CHORD 3-10=-4621/3835, 10-21=-5678/4549, 21-22=-5678/4549, 22-23=-5678/4549, 9-23=-5678/4549, 8-9=-4749/3933, 7-8=-4749/3933
WEBS 4-10=-882/861, 5-10=-731/1119, 5-9=-650/972, 6-9=-911/881, 1-11=-333/475

NOTES- (11-12)
1) 2-ply truss to be connected together with 16d (0.131"x 3.5") nails as follows:
Top chords connected as follows: 2x4 - 1 row at 0-9-0 oc clinched.
Bottom chords connected as follows: 2x6 - 2 rows staggered at 0-9-0 oc clinched.
Webs connected as follows: 2x4 - 1 row at 0-9-0 oc clinched.
2) All loads are considered equally applied to all plies, except if noted as front (F) or back (B) face in the LOAD CASE(S) section. Ply to ply connections have been provided to distribute only loads noted as (F) or (B), unless otherwise indicated.
3) Unbalanced roof live loads have been considered for this design.
4) Wind: ASCE 7-16; Vult=175mph (3-second gust) Vasd=136mph; HVHZ; TCDL=5.0psf; BCDL=5.0psf; h=28ft; Cat. II; Exp C; Part. Encl., GCpi=0.55; C-C Exterior(2E) -3-1-3 to 0-0-0, Interior(1) 0-0-0 to 0-9-1, Exterior(2R) 0-9-1 to 13-11-10, Exterior(2E) 13-11-10 to 16-11-10; Lumber DOL=1.60 plate grip DOL=1.60
5) Building Designer / Project engineer responsible for verifying applied roof live load shown covers rain loading requirements specific to the use of this truss component.
6) Provide adequate drainage to prevent water ponding.
7) This truss has been designed for a 10.0 psf bottom chord live load nonconcurrent with any other live loads.
8) Refer to girder(s) for truss to truss connections.
9) Provide mechanical connection (by others) of truss to bearing plate capable of withstanding 2108 lb uplift at joint 7 and 2594 lb uplift at joint 3.
10) Hanger(s) or other connection device(s) shall be provided sufficient to support concentrated load(s) 361 lb down and 409 lb up at 5-0-0, 361 lb down and 409 lb up at 7-0-12, 361 lb down and 409 lb up at 8-5-13, and 361 lb down and 409 lb up at 9-10-14, and 361 lb down and 409 lb up at 11-11-10 on top chord, and 450 lb down and 521 lb up at 5-0-0, 44 lb down and 25 lb up at 7-0-12, 44 lb down and 25 lb up at 8-5-13, and 44 lb down and 25 lb up at 9-10-14, and 450 lb down and 521 lb up at 11-10-14 on bottom chord. The design/selection of such connection device(s) is the responsibility of others.
11) All truss to truss connection by TCI are on the Truss Placement plan.
12) ARMANDO R. PEREZ PE. # 28026 Ph: (305) 882-8826

LOAD CASE(S) Standard
1) Dead + Roof Live (balanced): Lumber Increase=1.33, Plate Increase=1.33
Uniform Loads (plf)
Vert: 1-4=-90, 4-6=-90, 6-7=-90, 12-15=-20

Continued on page 2

LOAD CASE(S) Standard

Concentrated Loads (lb)

Vert: 4=-85(B) 6=-85(B) 10=-315(B) 5=-85(B) 9=-315(B) 18=-85(B) 19=-85(B) 21=-30(B) 22=-30(B) 23=-30(B)

Job	Truss	Truss Type	Qty	Ply	12715 ROLLING ROAD DR, PINECREST, FL.
12715	HG5T	HIP GIRDER	1	2	Job Reference (optional)

Trusscorp Int., 9590 NW 89 AVE, Medley, FL

8.820 s Dec 4 2024 MiTek Industries, Inc. Thu Jun 5 12:43:07 2025 Page 1
ID:_GLN6EJBZ1GCD23RDL_tAxzKvJz-PHGhp_8WMlJVd_zyi6puySOjYTRZ7207ywVU9Hz9LNY

-3-0-0	5-0-0	10-0-9	14-11-7	20-0-0	25-0-0	28-0-0
3-0-0	5-0-0	5-0-9	4-10-13	5-0-9	5-0-0	3-0-0

Scale = 1:53.2

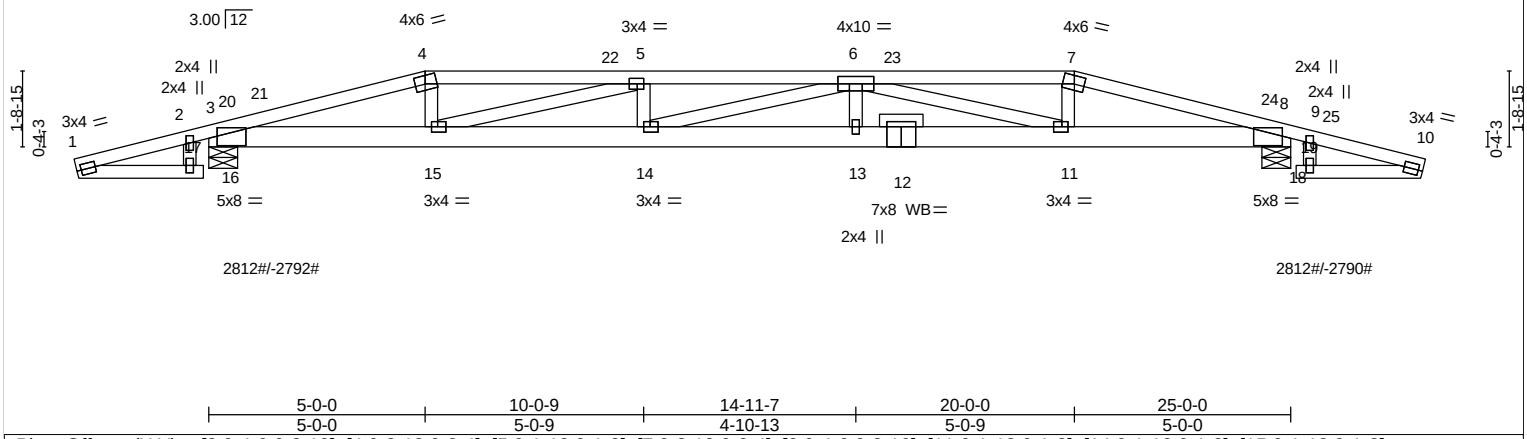

5-0-0	10-0-9	14-11-7	20-0-0	25-0-0
5-0-0	5-0-9	4-10-13	5-0-9	5-0-0

Plate Offsets (X,Y)-- [3:0-4-0,0-3-10], [4:0-2-12,0-2-4], [5:0-1-12,0-1-8], [7:0-2-12,0-2-4], [8:0-4-0,0-3-10], [11:0-1-12,0-1-8], [14:0-1-12,0-1-8], [15:0-1-12,0-1-8]

LOADING (psf)		**SPACING-**	2-0-0	**CSI.**		**DEFL.**	in	(loc)	l/defl	L/d	**PLATES**	**GRIP**
TCLL	30.0	Plate Grip DOL	1.33	TC	0.91	Vert(LL)	0.59	13-14	>497	360	MT20	244/190
TCDL	15.0	Lumber DOL	1.33	BC	0.93	Vert(CT)	-0.67	13-14	>438	180		
BCLL	0.0	Rep Stress Incr	NO	WB	0.54	Horz(CT)	0.10	8	n/a	n/a		
BCDL	10.0	Code FBC2020/TPI2014		Matrix-SH							Weight: 289 lb	FT = 0%

LUMBER-
TOP CHORD 2x4 SP No.2 *Except*
T2: 2x4 SP No.1
BOT CHORD 2x6 SP No.2
WEBS 2x4 SP No.3
OTHERS 2x4 SP No.3

BRACING-
TOP CHORD Structural wood sheathing directly applied or 3-10-4 oc purlins.
BOT CHORD Rigid ceiling directly applied or 4-10-0 oc bracing.

REACTIONS. (lb/size) 3=2446/0-8-0 (min. 0-1-11), 8=2446/0-8-0 (min. 0-1-11)
Max Uplift3=-2792(LC 4), 8=-2790(LC 4)
Max Grav 3=2812(LC 5), 8=2812(LC 5)

FORCES. (lb) - Max. Comp./Max. Ten. - All forces 250 (lb) or less except when shown.
TOP CHORD 3-21=-7284/6663, 4-21=-7281/6677, 4-22=-7166/6603, 5-22=-7166/6603, 5-6=-10458/10014, 6-23=-7152/6589, 7-23=-7152/6589, 7-24=-7265/6661, 8-24=-7269/6648
BOT CHORD 3-15=-6203/6873, 14-15=-9731/10325, 13-14=-9817/10410, 12-13=-9817/10410, 11-12=-9817/10410, 8-11=-6188/6859
WEBS 4-15=-1107/1507, 5-15=-3418/3541, 6-13=0/265, 6-11=-3522/3645, 7-11=-1108/1508

NOTES- (11-12)
1) 2-ply truss to be connected together with 16d (0.131"x 3.5") nails as follows:
Top chords connected as follows: 2x4 - 1 row at 0-9-0 oc clinched.
Bottom chords connected as follows: 2x6 - 2 rows staggered at 0-9-0 oc clinched.
Webs connected as follows: 2x4 - 1 row at 0-9-0 oc clinched.
2) All loads are considered equally applied to all plies, except if noted as front (F) or back (B) face in the LOAD CASE(S) section. Ply to ply connections have been provided to distribute only loads noted as (F) or (B), unless otherwise indicated.
3) Unbalanced roof live loads have been considered for this design.
4) Wind: ASCE 7-16; Vult=175mph (3-second gust) Vasd=136mph; HVHZ; TCDL=5.0psf; BCDL=5.0psf; h=28ft; Cat. II; Exp C; Part. Encl., GCpi=0.55; C-C Exterior(2E) -3-0-15 to -0-0-15, Interior(1) -0-0-15 to 0-9-1, Exterior(2R) 0-9-1 to 9-2-15, Interior(1) 9-2-15 to 15-9-1, Exterior(2R) 15-9-1 to 24-2-15, Interior(1) 24-2-15 to 25-0-15, Exterior(2E) 25-0-15 to 28-0-15; Lumber DOL=1.60 plate grip DOL=1.60
5) Building Designer / Project engineer responsible for verifying applied roof live load shown covers rain loading requirements specific to the use of this truss component.
6) Provide adequate drainage to prevent water ponding.
7) This truss has been designed for a 10.0 psf bottom chord live load nonconcurrent with any other live loads.
8) Provide mechanical connection (by others) of truss to bearing plate capable of withstanding 2792 lb uplift at joint 3 and 2790 lb uplift at joint 8.
9) Girder carries hip end with 5-0-0 end setback.
10) Hanger(s) or other connection device(s) shall be provided sufficient to support concentrated load(s) 590 lb down and 371 lb up at 20-0-0, and 590 lb down and 371 lb up at 5-0-0 on bottom chord. The design/selection of such connection device(s) is the responsibility of others.
11) All truss to truss connection by TCI are on the Truss Placement plan.
12) ARMANDO R. PEREZ PE. # 28026 Ph: (305) 882-8826

LOAD CASE(S) Standard
1) Dead + Roof Live (balanced): Lumber Increase=1.33, Plate Increase=1.33
Uniform Loads (plf)
Vert: 1-4=-90, 4-7=-143(F=-53), 7-10=-90, 3-15=-20, 11-15=-32(F=-12), 8-11=-20
Concentrated Loads (lb)
Vert: 15=-321(F) 11=-321(F)

Job	Truss	Truss Type	Qty	Ply	12715 ROLLING ROAD DR, PINECREST, FL.
12715	HG6	Half Hip Girder	1	2	Job Reference (optional)

Trusscorp Int., 9590 NW 89 AVE, Medley, FL

8.820 s Dec 4 2024 MiTek Industries, Inc. Thu Jun 5 12:43:11 2025 Page 1
ID:_GLN6EJBZ1GCD23RDL_tAxzKvJz-I2WCeLB1Q_qx6cHjxytq6IYRr4oJ3nhjsXThI2z9LNU

-3-0-0	5-0-0	10-0-6	14-11-0	19-9-10	25-0-0
3-0-0	5-0-0	5-0-6	4-10-10	4-10-10	5-2-6

Scale: 1/4"=1'

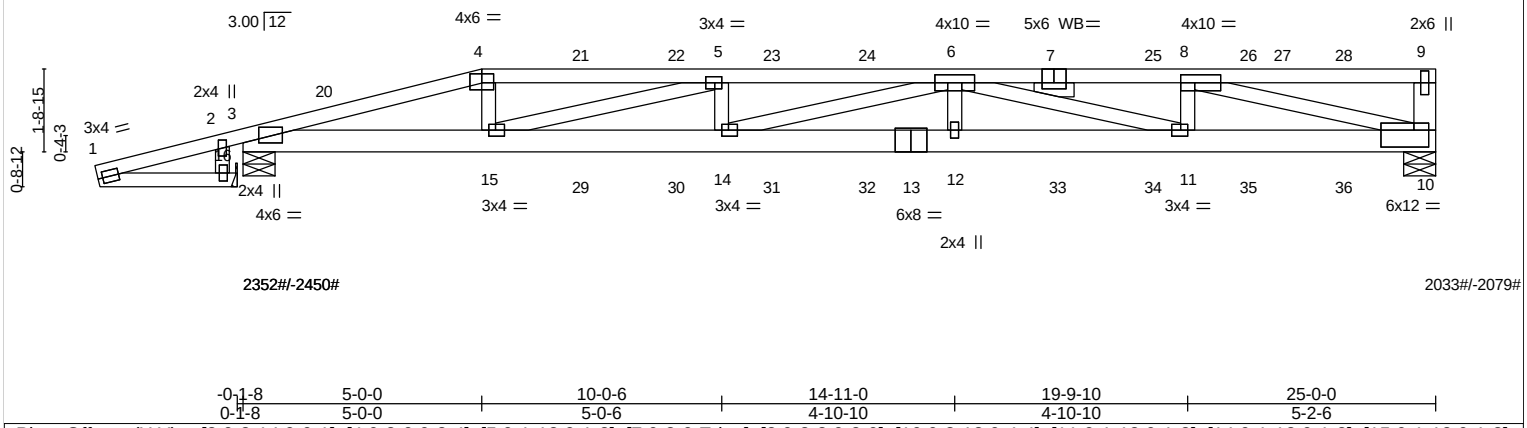

-0-1-8	5-0-0	10-0-6	14-11-0	19-9-10	25-0-0
0-1-8	5-0-0	5-0-6	4-10-10	4-10-10	5-2-6

Plate Offsets (X,Y)-- [3:0-3-14,0-0-1], [4:0-3-0,0-2-4], [5:0-1-12,0-1-8], [7:0-3-0,Edge], [8:0-3-8,0-2-0], [10:0-3-12,0-4-4], [11:0-1-12,0-1-8], [14:0-1-12,0-1-8], [15:0-1-12,0-1-8], [16:0-2-0,0-1-0]

LOADING (psf)		**SPACING-**	2-0-0	**CSI.**		**DEFL.**	in	(loc)	l/defl	L/d	**PLATES**	**GRIP**
TCLL	30.0	Plate Grip DOL	1.33	TC	0.82	Vert(LL)	0.71	12-14	>416	360	MT20	244/190
TCDL	15.0	Lumber DOL	1.33	BC	0.94	Vert(CT)	-0.68	12-14	>439	180		
BCLL	0.0	Rep Stress Incr	NO	WB	0.88	Horz(CT)	-0.10	10	n/a	n/a		
BCDL	10.0	Code FBC2020/TPI2014		Matrix-MSH							Weight: 286 lb	FT = 0%

LUMBER-
TOP CHORD 2x4 SP No.2 *Except*
T2: 2x4 SP No.1
BOT CHORD 2x6 SP No.2
WEBS 2x4 SP No.3 *Except*
W4: 2x6 SP No.2
OTHERS 2x4 SP No.3

BRACING-
TOP CHORD Structural wood sheathing directly applied or 4-0-10 oc purlins, except end verticals.
BOT CHORD Rigid ceiling directly applied or 4-10-7 oc bracing.

REACTIONS. (lb/size) 10=2033/0-8-0 (min. 0-1-8), 3=2352/0-8-0 (min. 0-1-8), 16=-0/Mechanical
Max Horz 3=388(LC 5), 16=542(LC 13)
Max Uplift10=-2079(LC 4), 3=-2450(LC 4)
Max Grav 10=2033(LC 1), 3=2352(LC 1)

FORCES. (lb) - Max. Comp./Max. Ten. - All forces 250 (lb) or less except when shown.
TOP CHORD 1-2=-517/460, 2-3=-519/471, 3-20=-1959/2000, 3-4=-6225/6608, 4-21=-6095/6552, 21-22=-6095/6552, 5-22=-6095/6552, 5-23=-9071/9531, 23-24=-9071/9531, 6-24=-9071/9531, 6-7=-5953/6120, 7-25=-5953/6120, 8-25=-5953/6120, 8-26=-379/397, 26-27=-379/397, 27-28=-379/397, 9-28=-379/397, 9-10=-301/381
BOT CHORD 3-15=-6450/5986, 15-29=-9531/9071, 29-30=-9531/9071, 14-30=-9531/9071, 14-31=-9313/9003, 31-32=-9313/9003, 13-32=-9313/9003, 12-13=-9313/9003, 12-33=-9313/9003, 33-34=-9313/9003, 11-34=-9313/9003, 11-35=-6120/5953, 35-36=-6120/5953, 10-36=-6120/5953
WEBS 4-15=-959/1041, 1-16=-464/543, 8-10=-5782/5936, 5-15=-3190/3093, 8-11=-714/886, 5-14=0/297, 6-11=-3167/3315, 6-12=-24/317

NOTES- (11-12)
1) 2-ply truss to be connected together with 16d (0.131"x 3.5") nails as follows:
Top chords connected as follows: 2x4 - 1 row at 0-9-0 oc clinched, 2x6 - 2 rows staggered at 0-9-0 oc clinched.
Bottom chords connected as follows: 2x6 - 2 rows staggered at 0-9-0 oc clinched.
Webs connected as follows: 2x4 - 2 rows staggered at 0-3-0 oc clinched, Except member 2-16 2x4 - 1 row at 0-9-0 oc clinched, member 10-8 2x4 - 1 row at 0-9-0 oc clinched, member 15-5 2x4 - 1 row at 0-9-0 oc clinched, member 11-8 2x4 - 1 row at 0-9-0 oc clinched, member 14-5 2x4 - 1 row at 0-9-0 oc clinched, member 11-6 2x4 - 1 row at 0-9-0 oc clinched, member 14-6 2x4 - 1 row at 0-9-0 oc clinched, member 12-6 2x4 - 1 row at 0-2-0 oc clinched.
2) All loads are considered equally applied to all plies, except if noted as front (F) or back (B) face in the LOAD CASE(S) section. Ply to ply connections have been provided to distribute only loads noted as (F) or (B), unless otherwise indicated.
3) Unbalanced roof live loads have been considered for this design.
4) Wind: ASCE 7-16; Vult=175mph (3-second gust) Vasd=136mph; HVHZ; TCDL=5.0psf; BCDL=5.0psf; h=28ft; Cat. II; Exp C; Encl., GCpi=0.18; C-C Exterior(2E) -3-0-15 to 0-0-0, Interior(1) 0-0-0 to 0-9-1, Exterior(2R) 0-9-1 to 9-2-15, Interior(1) 9-2-15 to 21-9-4, Exterior(2E) 21-9-4 to 24-9-4; Lumber DOL=1.60 plate grip DOL=1.60
5) Building Designer / Project engineer responsible for verifying applied roof live load shown covers rain loading requirements specific to the use of this truss component.
6) Provide adequate drainage to prevent water ponding.
7) This truss has been designed for a 10.0 psf bottom chord live load nonconcurrent with any other live loads.
8) Refer to girder(s) for truss to truss connections.
9) Provide mechanical connection (by others) of truss to bearing plate capable of withstanding 2079 lb uplift at joint 10 and 2450 lb uplift at joint 3.

Continued on page 2

NOTES- (11-12)

10) Hanger(s) or other connection device(s) shall be provided sufficient to support concentrated load(s) 262 lb down and 319 lb up at 5-0-0, 262 lb down and 319 lb up at 7-0-12, 252 lb down and 319 lb up at 9-0-12, 238 lb down and 319 lb up at 11-0-12, 238 lb down and 319 lb up at 13-0-12, 238 lb down and 319 lb up at 15-0-12, 238 lb down and 319 lb up at 17-0-12, 238 lb down and 319 lb up at 19-0-12, and 241 lb down and 319 lb up at 21-0-12, and 256 lb down and 319 lb up at 23-0-12 on top chord, and 373 lb down and 421 lb up at 5-0-0, 43 lb down and 22 lb up at 7-0-12, 43 lb down and 22 lb up at 9-0-12, 43 lb down and 22 lb up at 11-0-12, 43 lb down and 22 lb up at 13-0-12, 43 lb down and 22 lb up at 15-0-12, 43 lb down and 22 lb up at 17-0-12, 43 lb down and 22 lb up at 19-0-12, and 43 lb down and 22 lb up at 21-0-12, and 43 lb down and 22 lb up at 23-0-12 on bottom chord. The design/selection of such connection device(s) is the responsibility of others.
11) All truss to truss connection by TCI are on the Truss Placement plan.
12) ARMANDO R. PEREZ PE. # 28026 Ph: (305) 882-8826

LOAD CASE(S) Standard

1) Dead + Roof Live (balanced): Lumber Increase=1.33, Plate Increase=1.33
   Uniform Loads (plf)
      Vert: 1-4=-90, 4-9=-90, 10-17=-20
   Concentrated Loads (lb)
      Vert: 4=-83(B) 7=-83(B) 15=-286(B) 6=-83(B) 12=-30(B) 21=-83(B) 22=-83(B) 23=-83(B) 24=-83(B) 25=-83(B) 26=-83(B) 28=-83(B) 29=-30(B) 30=-30(B) 31=-30(B) 32=-30(B) 33=-30(B) 34=-30(B) 35=-30(B) 36=-30(B)

Job	Truss	Truss Type	Qty	Ply	12715 ROLLING ROAD DR, PINECREST, FL.
12715	HG7	HIP GIRDER	1	2	Job Reference (optional)

Trusscorp Int., 9590 NW 89 AVE, Medley, FL — 8.820 s Dec 4 2024 MiTek Industries, Inc. Thu Jun 5 12:43:17 2025 Page 1

ID:_GLN6EJBZ1GCD23RDL_tAxzKvJz-6CtTvPGo?qa4qXktHD_EMZoRQVriTWBbFTw0Whz9LNO

-3-0-0	5-0-0	10-0-1	14-10-6	19-8-10	24-6-15	29-6-4	33-4-14	37-2-8	41-1-14	46-1-14	49-1-14
3-0-0	5-0-0	5-0-1	4-10-5	4-10-5	4-10-5	4-11-5	3-10-10	3-9-10	3-11-6	5-0-0	3-0-0

Scale = 1:93.2

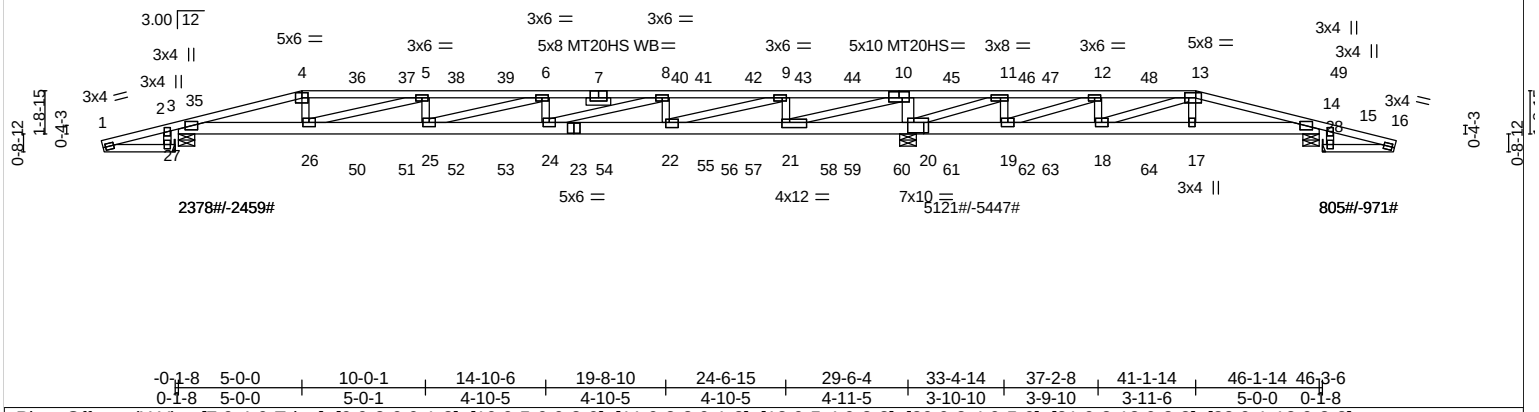

-0-1-8	5-0-0	10-0-1	14-10-6	19-8-10	24-6-15	29-6-4	33-4-14	37-2-8	41-1-14	46-1-14	46-3-6
0-1-8	5-0-0	5-0-1	4-10-5	4-10-5	4-10-5	4-11-5	3-10-10	3-9-10	3-11-6	5-0-0	0-1-8

Plate Offsets (X,Y)-- [7:0-4-0,Edge], [9:0-2-0,0-1-8], [10:0-5-0,0-3-0], [11:0-3-8,0-1-8], [13:0-5-4,0-2-8], [20:0-2-4,0-5-0], [21:0-3-12,0-2-8], [22:0-1-12,0-2-8]

LOADING (psf)		SPACING-	2-0-0	CSI.		DEFL.	in	(loc)	l/defl	L/d	PLATES	GRIP
TCLL	30.0	Plate Grip DOL	1.33	TC	0.95	Vert(LL)	0.94	24-25	>384	360	MT20	244/190
TCDL	15.0	Lumber DOL	1.33	BC	0.94	Vert(CT)	-0.91	24-25	>397	180	MT20HS	187/143
BCLL	0.0	Rep Stress Incr	NO	WB	0.82	Horz(CT)	0.06	20	n/a	n/a		
BCDL	10.0	Code FBC2020/TPI2014		Matrix-MSH							Weight: 527 lb	FT = 0%

LUMBER-

TOP CHORD 2x4 SP No.1 *Except*
T1: 2x4 SP No.2
BOT CHORD 2x6 SP No.2
WEBS 2x4 SP No.3 *Except*
W4: 2x6 SP No.2, W1: 2x4 SP No.2
OTHERS 2x4 SP No.3

BRACING-

TOP CHORD Structural wood sheathing directly applied or 4-0-0 oc purlins.
BOT CHORD Rigid ceiling directly applied or 4-11-6 oc bracing.

REACTIONS. (lb/size) 3=2371/0-8-0 (min. 0-1-8), 20=5121/0-8-0 (min. 0-3-0), 27=0/Mechanical, 28=-0/Mechanical, 14=794/0-8-0 (min. 0-1-8)
Max Horz 3=-376(LC 10), 27=576(LC 13), 28=-503(LC 13)
Max Uplift3=-2459(LC 4), 20=-5447(LC 4), 14=-971(LC 4)
Max Grav 3=2378(LC 9), 20=5121(LC 1), 14=805(LC 14)

FORCES. (lb) - Max. Comp./Max. Ten. - All forces 250 (lb) or less except when shown.

TOP CHORD 1-2=-549/500, 2-3=-552/512, 3-35=-1853/1896, 3-4=-6247/6571, 4-36=-6116/6514, 36-37=-6116/6514, 5-37=-6116/6514, 5-38=-9205/9547, 38-39=-9205/9547, 6-39=-9205/9547, 6-7=-9152/9279, 7-40=-9152/9279, 8-40=-9152/9279, 8-41=-6405/6338, 41-42=-6405/6338, 9-42=-6405/6338, 9-43=-776/505, 43-44=-776/505, 10-44=-776/505, 10-45=-9243/8851, 45-46=-9243/8851, 11-46=-9243/8851, 11-47=-4624/4847, 12-47=-4624/4847, 12-48=-735/1279, 13-48=-735/1279, 13-14=-1082/1247, 14-49=-433/346, 14-15=-482/423, 15-16=-480/412

BOT CHORD 3-26=-6155/5916, 26-50=-9289/9091, 50-51=-9289/9091, 25-51=-9289/9091, 25-52=-9021/9015, 52-53=-9021/9015, 24-53=-9021/9015, 23-24=-6080/6244, 23-54=-6080/6244, 54-55=-6080/6244, 22-55=-6080/6244, 22-56=-256/607, 56-57=-256/607, 21-57=-256/607, 21-58=-6829/7222, 58-59=-6829/7222, 59-60=-6829/7222, 20-60=-6829/7222, 20-61=-5030/4881, 61-62=-5030/4881, 19-62=-5030/4881, 19-63=-1513/984, 18-63=-1513/984, 18-64=-1031/900, 17-64=-1031/900, 14-17=-999/857

WEBS 4-26=-956/1047, 10-20=-3583/3861, 13-17=-302/407, 10-21=-7774/7712, 5-26=-3286/3151, 9-21=-2159/2395, 5-25=0/316, 9-22=-6081/5874, 6-25=-278/165, 8-22=-1426/1665, 6-24=-639/878, 8-24=-3056/2879, 13-18=-1874/1961, 11-20=-4344/5012, 12-18=-672/778, 11-19=-1229/1202, 12-19=-3852/4314, 1-27=-506/577, 16-28=-414/504

NOTES- (13-14)

1) 2-ply truss to be connected together with 16d (0.131"x 3.5") nails as follows:
Top chords connected as follows: 2x4 - 1 row at 0-9-0 oc clinched.
Bottom chords connected as follows: 2x6 - 2 rows staggered at 0-9-0 oc clinched.
Webs connected as follows: 2x4 - 2 rows staggered at 0-3-0 oc clinched, Except member 21-10 2x4 - 1 row at 0-9-0 oc clinched, member 26-5 2x4 - 1 row at 0-9-0 oc clinched, member 21-9 2x4 - 1 row at 0-9-0 oc clinched, member 25-5 2x4 - 1 row at 0-9-0 oc clinched, member 22-9 2x4 - 1 row at 0-9-0 oc clinched, member 25-6 2x4 - 1 row at 0-9-0 oc clinched, member 22-8 2x4 - 1 row at 0-9-0 oc clinched, member 24-6 2x4 - 1 row at 0-2-0 oc clinched, member 24-8 2x4 - 1 row at 0-9-0 oc clinched, member 18-13 2x4 - 1 row at 0-9-0 oc clinched, member 20-11 2x4 - 1 row at 0-9-0 oc clinched, member 18-12 2x4 - 1 row at 0-2-0 oc clinched, member 19-11 2x4 - 1 row at 0-2-0 oc clinched, member 19-12 2x4 - 1 row at 0-9-0 oc clinched, 2x6 - 2 rows staggered at 0-5-0 oc clinched.
2) All loads are considered equally applied to all plies, except if noted as front (F) or back (B) face in the LOAD CASE(S) section. Ply to ply connections have been provided to distribute only loads noted as (F) or (B), unless otherwise indicated.
3) Unbalanced roof live loads have been considered for this design.

Continued on page 2

NOTES- (13-14)

4) Wind: ASCE 7-16; Vult=175mph (3-second gust) Vasd=136mph; HVHZ; TCDL=5.0psf; BCDL=5.0psf; h=28ft; Cat. II; Exp C; Encl., GCpi=0.18; C-C Exterior(2E) -3-0-15 to 0-0-0, Interior(1) 0-0-0 to 0-9-1, Exterior(2R) 0-9-1 to 9-2-15, Interior(1) 9-2-15 to 36-10-15, Exterior(2R) 36-10-15 to 45-4-13, Interior(1) 45-4-13 to 46-1-14, Exterior(2E) 46-1-14 to 49-2-13; porch right exposed; Lumber DOL=1.60 plate grip DOL=1.60
5) Building Designer / Project engineer responsible for verifying applied roof live load shown covers rain loading requirements specific to the use of this truss component.
6) Provide adequate drainage to prevent water ponding.
7) All plates are MT20 plates unless otherwise indicated.
8) All plates are 4x6 MT20 unless otherwise indicated.
9) This truss has been designed for a 10.0 psf bottom chord live load nonconcurrent with any other live loads.
10) Refer to girder(s) for truss to truss connections.
11) Provide mechanical connection (by others) of truss to bearing plate capable of withstanding 2459 lb uplift at joint 3, 5447 lb uplift at joint 20 and 971 lb uplift at joint 14.
12) Hanger(s) or other connection device(s) shall be provided sufficient to support concentrated load(s) 262 lb down and 319 lb up at 5-0-0, 262 lb down and 319 lb up at 7-0-12, 252 lb down and 319 lb up at 9-0-12, 238 lb down and 319 lb up at 11-0-12, 238 lb down and 319 lb up at 13-0-12, 238 lb down and 319 lb up at 15-0-12, 238 lb down and 319 lb up at 17-0-12, 238 lb down and 319 lb up at 19-0-12, 238 lb down and 319 lb up at 21-0-12, 238 lb down and 319 lb up at 23-0-15, 238 lb down and 319 lb up at 25-1-2, 238 lb down and 319 lb up at 27-1-2, 238 lb down and 319 lb up at 29-1-2, 278 lb down and 359 lb up at 31-1-2, 278 lb down and 359 lb up at 33-1-2, 278 lb down and 359 lb up at 35-1-2, 292 lb down and 359 lb up at 37-1-2, and 302 lb down and 359 lb up at 39-1-2, and 302 lb down and 359 lb up at 41-1-14 on top chord, and 373 lb down and 421 lb up at 5-0-0, 43 lb down and 22 lb up at 7-0-12, 43 lb down and 22 lb up at 9-0-12, 43 lb down and 22 lb up at 11-0-12, 43 lb down and 22 lb up at 13-0-12, 43 lb down and 22 lb up at 15-0-12, 43 lb down and 22 lb up at 17-0-12, 43 lb down and 22 lb up at 19-0-12, 43 lb down and 22 lb up at 21-0-12, 43 lb down and 22 lb up at 23-0-15, 43 lb down and 22 lb up at 25-1-2, 43 lb down and 22 lb up at 27-1-2, 43 lb down and 22 lb up at 29-1-2, 43 lb down and 25 lb up at 31-1-2, 43 lb down and 25 lb up at 33-1-2, 43 lb down and 25 lb up at 35-1-2, 43 lb down and 25 lb up at 37-1-2, and 43 lb down and 25 lb up at 39-1-2, and 435 lb down and 482 lb up at 41-1-2 on bottom chord. The design/selection of such connection device(s) is the responsibility of others.
13) All truss to truss connection by TCI are on the Truss Placement plan.
14) ARMANDO R. PEREZ PE. # 28026 Ph: (305) 882-8826

LOAD CASE(S) Standard

1) Dead + Roof Live (balanced): Lumber Increase=1.33, Plate Increase=1.33
   Uniform Loads (plf)
   Vert: 1-4=-90, 4-13=-90, 13-16=-90, 29-32=-20
   Concentrated Loads (lb)
   Vert: 4=-83(F) 7=-83(F) 13=-83(F) 26=-286(F) 10=-83(F) 17=-286(F) 6=-83(F) 24=-30(F) 18=-30(F) 12=-83(F) 36=-83(F) 37=-83(F) 38=-83(F) 39=-83(F) 40=-83(F) 41=-83(F) 42=-83(F) 43=-83(F) 44=-83(F) 45=-83(F) 46=-83(F) 47=-83(F) 48=-83(F) 50=-30(F) 51=-30(F) 52=-30(F) 53=-30(F) 54=-30(F) 55=-30(F) 56=-30(F) 57=-30(F) 58=-30(F) 59=-30(F) 60=-30(F) 61=-30(F) 62=-30(F) 63=-30(F) 64=-30(F)

Job	Truss	Truss Type	Qty	Ply	12715 ROLLING ROAD DR, PINECREST, FL.
12715	HG8	HIP GIRDER	1	2	Job Reference (optional)

Trusscorp Int., 9590 NW 89 AVE, Medley, FL

8.820 s Dec 4 2024 MiTek Industries, Inc. Thu Jun 5 12:43:20 2025 Page 1
ID:_GLN6EJBZ1GCD23RDL_tAxzKvJz-XnZcXQIgIlyfh_TSyLYxzCQz8ixmguR2xR9g70z9LNL

-3-0-0	3-2-8	7-0-0	11-2-8	15-5-0	19-2-8	22-5-0	25-5-0
3-0-0	3-2-8	3-9-8	4-2-8	4-2-8	3-9-8	3-2-8	3-0-0

Scale = 1:50.7

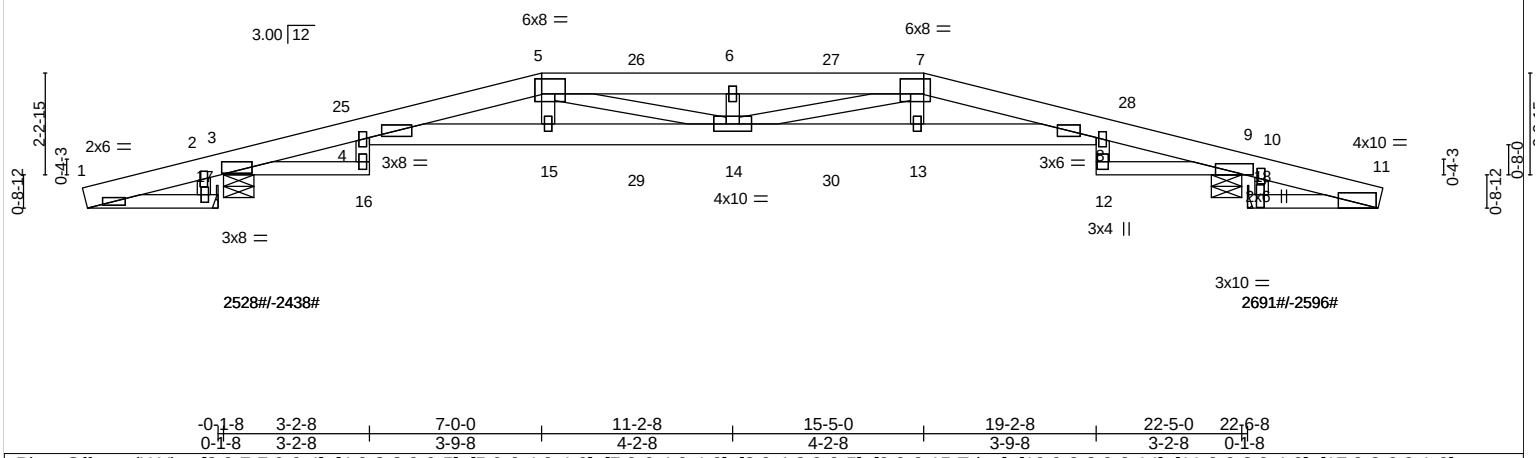

-0-1-8	3-2-8	7-0-0	11-2-8	15-5-0	19-2-8	22-5-0	22-6-8
0-1-8	3-2-8	3-9-8	4-2-8	4-2-8	3-9-8	3-2-8	0-1-8

Plate Offsets (X,Y)-- [3:0-7-7,0-0-4], [4:0-3-3,0-0-5], [5:0-6-4,0-4-0], [7:0-6-4,0-4-0], [8:0-4-3,0-0-5], [9:0-6-15,Edge], [10:0-3-3,0-0-14], [11:0-0-8,0-4-0], [17:0-2-0,0-1-0], [18:0-2-10,0-0-6]

LOADING (psf)		**SPACING-**	2-0-0	**CSI.**		**DEFL.**	in	(loc)	l/defl	L/d	**PLATES**	**GRIP**
TCLL	30.0	Plate Grip DOL	1.33	TC	0.79	Vert(LL)	0.45	14-15	>599	360	MT20	244/190
TCDL	15.0	Lumber DOL	1.33	BC	0.66	Vert(CT)	-0.44	14-15	>613	180		
BCLL	0.0	Rep Stress Incr	NO	WB	0.72	Horz(CT)	0.10	9	n/a	n/a		
BCDL	10.0	Code FBC2020/TPI2014		Matrix-MSH							Weight: 282 lb	FT = 0%

LUMBER-
TOP CHORD 2x6 SP No.2 *Except*
T3: 2x6 SP 2400F 2.0E
BOT CHORD 2x4 SP No.2 *Except*
B2: 2x4 SP No.3, B3: 2x6 SP No.2
WEBS 2x4 SP No.3
OTHERS 2x4 SP No.3

BRACING-
TOP CHORD Structural wood sheathing directly applied or 4-11-13 oc purlins.
BOT CHORD Rigid ceiling directly applied or 6-0-0 oc bracing.

REACTIONS. (lb/size) 3=2528/0-8-0 (min. 0-1-8), 9=2691/0-8-0 (min. 0-1-9), 17=0/Mechanical, 18=0/Mechanical
Max Horz 3=2517(LC 1), 17=1533(LC 9), 18=-4029(LC 1)
Max Uplift3=-2438(LC 4), 9=-2596(LC 4)
Max Grav 3=2528(LC 1), 9=2691(LC 1)

FORCES. (lb) - Max. Comp./Max. Ten. - All forces 250 (lb) or less except when shown.
TOP CHORD 1-2=-1471/1304, 2-3=-1429/1315, 3-25=-4333/4185, 4-25=-4294/4186, 4-5=-7958/7858, 5-26=-8775/8826, 6-26=-8775/8826, 6-27=-8775/8826, 7-27=-8775/8826, 7-8=-7327/7250, 8-28=-4102/4000, 9-28=-4139/3995, 9-10=-3850/3679, 10-11=-3874/3651
BOT CHORD 4-15=-3650/3770, 15-29=-3742/3880, 14-29=-3742/3880, 14-30=-3092/3239, 13-30=-3092/3239, 8-13=-3026/3155, 8-12=-369/391
WEBS 5-15=-685/826, 5-14=-1117/1233, 6-14=-722/890, 7-14=-1731/1876, 7-13=-523/666, 1-17=-1348/1534, 11-18=-3786/4031

NOTES- (13-14)
1) Special connection required to distribute web loads equally between all plies.
2) 2-ply truss to be connected together with 16d (0.131"x 3.5") nails as follows:
Top chords connected as follows: 2x6 - 3 rows staggered at 0-2-0 oc clinched.
Bottom chords connected as follows: 2x4 - 1 row at 0-9-0 oc clinched, 2x6 - 3 rows staggered at 0-2-0 oc clinched.
Webs connected as follows: 2x4 - 2 rows staggered at 0-2-0 oc clinched, Except member 14-5 2x4 - 1 row at 0-9-0 oc clinched, member 14-7 2x4 - 1 row at 0-9-0 oc clinched.
3) All loads are considered equally applied to all plies, except if noted as front (F) or back (B) face in the LOAD CASE(S) section. Ply to ply connections have been provided to distribute only loads noted as (F) or (B), unless otherwise indicated.
4) Unbalanced roof live loads have been considered for this design.
5) Wind: ASCE 7-16; Vult=175mph (3-second gust) Vasd=136mph; HVHZ; TCDL=5.0psf; BCDL=5.0psf; h=28ft; Cat. II; Exp C; Encl., GCpi=0.18; C-C Exterior(2E) -3-0-11 to 0-0-0, Interior(1) 0-0-0 to 2-9-1, Exterior(2R) 2-9-1 to 19-7-15, Interior(1) 19-7-15 to 22-5-0, Exterior(2E) 22-5-0 to 25-5-11; Lumber DOL=1.60 plate grip DOL=1.60
6) Building Designer / Project engineer responsible for verifying applied roof live load shown covers rain loading requirements specific to the use of this truss component.
7) Provide adequate drainage to prevent water ponding.
8) All plates are 2x4 MT20 unless otherwise indicated.
9) This truss has been designed for a 10.0 psf bottom chord live load nonconcurrent with any other live loads.
10) Refer to girder(s) for truss to truss connections.
11) Provide mechanical connection (by others) of truss to bearing plate capable of withstanding 2438 lb uplift at joint 3 and 2596 lb uplift at joint 9.
12) Hanger(s) or other connection device(s) shall be provided sufficient to support concentrated load(s) 327 lb down and 368 lb up at 7-0-0, 327 lb down and 368 lb up at 9-0-12, 327 lb down and 368 lb up at 11-0-12, 327 lb down and 368 lb up at 11-4-4, and 327 lb down and 368 lb up at 13-4-4, and 327 lb down and 368 lb up at 15-5-0 on top chord, and 525 lb down and 537 lb up at 7-0-0, 50 lb down and 48 lb up at 9-0-12, 50 lb down and 48 lb up at 11-0-12, 50 lb down and 48 lb up at 11-4-4, and 50 lb down and 48 lb up at 13-4-4, and 525 lb down and 537 lb up at 15-4-4 on bottom chord. The design/selection of such connection device(s) is the responsibility of others.

Continued on page 2

13) All truss to truss connection by TCI are on the Truss Placement plan.
14) ARMANDO R. PEREZ PE. # 28026 Ph: (305) 882-8826

LOAD CASE(S) Standard
1) Dead + Roof Live (balanced): Lumber Increase=1.33, Plate Increase=1.33
Uniform Loads (plf)
Vert: 1-4=-90, 4-5=-90, 5-7=-90, 7-8=-90, 8-11=-90, 16-19=-20, 4-8=-20, 12-22=-20
Concentrated Loads (lb)
Vert: 5=-162(F) 7=-162(F) 15=-525(F) 14=-90(F) 6=-324(F) 13=-525(F) 26=-162(F) 27=-162(F) 29=-45(F) 30=-45(F)

Job	Truss	Truss Type	Qty	Ply	12715 ROLLING ROAD DR, PINECREST, FL.
12715	HG9	HIP GIRDER	1	3	Job Reference (optional)

Trusscorp Int., 9590 NW 89 AVE, Medley, FL

8.820 s Dec 4 2024 MiTek Industries, Inc. Thu Jun 5 12:43:23 2025 Page 1
ID:_GLN6EJBZ1GCD23RDL_tAxzKvJz-xMEkASLYbgKEYSC1eT5ebq2WEv_7tLLUdPOKkLz9LNI

-3-0-0	3-8-0	5-0-0	9-2-4	13-2-12	17-5-0	18-9-0	22-5-0	25-5-0
3-0-0	3-8-0	1-4-0	4-2-4	4-0-8	4-2-4	1-4-0	3-8-0	3-0-0

Scale = 1:50.3

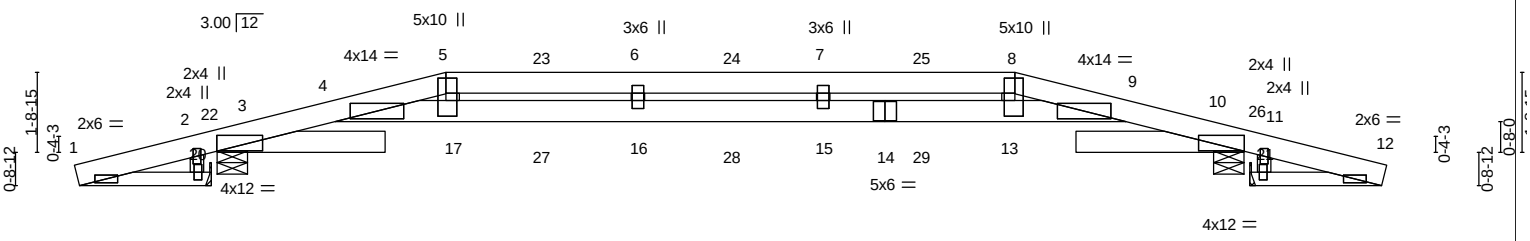

2572#/-2915#

2674#/-3027#

-0-1-8	3-8-0	5-0-0	9-2-4	13-2-12	17-5-0	18-9-0	22-5-0	22-6-8
0-1-8	3-8-0	1-4-0	4-2-4	4-0-8	4-2-4	1-4-0	3-8-0	0-1-8

Plate Offsets (X,Y)-- [3:0-11-15,0-0-2], [5:0-4-0,0-2-3], [8:0-4-0,0-2-3], [10:0-11-15,0-0-2], [20:0-2-0,0-1-0], [21:0-2-0,0-0-8]

LOADING (psf)		**SPACING-**	2-0-0	**CSI.**		**DEFL.**	in	(loc)	l/defl	L/d	**PLATES**	**GRIP**
TCLL	30.0	Plate Grip DOL	1.33	TC	0.67	Vert(LL)	0.67	15-16	>372	360	MT20	244/190
TCDL	15.0	Lumber DOL	1.33	BC	0.55	Vert(CT)	-0.58	15-16	>431	180		
BCLL	0.0	Rep Stress Incr	YES	WB	0.26	Horz(CT)	-0.08	10	n/a	n/a		
BCDL	10.0	Code FBC2020/TPI2014		Matrix-SH							Weight: 409 lb	FT = 0%

LUMBER-
TOP CHORD 2x6 SP No.1
BOT CHORD 2x6 SP No.1 *Except*
B1: 2x6 SP No.2
WEBS 2x4 SP No.3
OTHERS 2x4 SP No.3

BRACING-
TOP CHORD Structural wood sheathing directly applied or 6-0-0 oc purlins.
BOT CHORD Rigid ceiling directly applied or 9-10-2 oc bracing.

REACTIONS. (lb/size) 3=2268/0-8-0 (min. 0-1-8), 10=2358/0-8-0 (min. 0-1-8), 20=0/Mechanical, 21=0/Mechanical
Max Horz 3=-1122(LC 4), 20=1430(LC 13), 21=2434(LC 4)
Max Uplift3=-2915(LC 4), 10=-3027(LC 4)
Max Grav 3=2572(LC 14), 10=2674(LC 14)

FORCES. (lb) - Max. Comp./Max. Ten. - All forces 250 (lb) or less except when shown.
TOP CHORD 1-2=-1377/1312, 2-22=-1381/1325, 3-22=-1380/1330, 3-4=-2887/3080, 4-5=-9494/10377, 5-23=-9599/10504, 6-23=-9599/10504, 6-24=-9599/10504, 7-24=-9599/10504, 7-25=-9599/10505, 8-25=-9599/10505, 8-9=-9499/10383, 9-10=-2911/3106, 10-26=-2270/2371, 11-26=-2277/2369, 11-12=-2279/2350
BOT CHORD 4-17=-7423/6753, 17-27=-7782/7098, 16-27=-7782/7098, 16-28=-7782/7098, 15-28=-7782/7098, 14-15=-7782/7098, 14-29=-7782/7098, 13-29=-7782/7098, 9-13=-7396/6728
WEBS 5-17=-1558/1496, 8-13=-1678/1606, 1-20=-1343/1431, 12-21=-2435/2369

NOTES- (12-13)
1) 3-ply truss to be connected together with 16d (0.131"x 3.5") nails as follows:
Top chords connected as follows: 2x6 - 3 rows staggered at 0-4-0 oc.
Bottom chords connected as follows: 2x6 - 2 rows staggered at 0-9-0 oc.
Webs connected as follows: 2x4 - 2 rows staggered at 0-4-0 oc.
2) All loads are considered equally applied to all plies, except if noted as front (F) or back (B) face in the LOAD CASE(S) section. Ply to ply connections have been provided to distribute only loads noted as (F) or (B), unless otherwise indicated.
3) Unbalanced roof live loads have been considered for this design.
4) Wind: ASCE 7-16; Vult=175mph (3-second gust) Vasd=136mph; HVHZ; TCDL=5.0psf; BCDL=5.0psf; h=28ft; Cat. II; Exp C; Part. Encl., GCpi=0.55; C-C Exterior(2E) -3-0-11 to -0-0-11, Interior(1) -0-0-11 to 0-9-1, Exterior(2R) 0-9-1 to 9-2-4, Interior(1) 9-2-4 to 13-2-1, Exterior(2R) 13-2-1 to 21-7-3, Interior(1) 21-7-3 to 22-5-11, Exterior(2E) 22-5-11 to 25-5-11; Lumber DOL=1.60 plate grip DOL=1.60
5) Building Designer / Project engineer responsible for verifying applied roof live load shown covers rain loading requirements specific to the use of this truss component.
6) Provide adequate drainage to prevent water ponding.
7) This truss has been designed for a 10.0 psf bottom chord live load nonconcurrent with any other live loads.
8) Refer to girder(s) for truss to truss connections.
9) Provide mechanical connection (by others) of truss to bearing plate capable of withstanding 2915 lb uplift at joint 3 and 3027 lb uplift at joint 10.
10) Beveled plate or shim required to provide full bearing surface with truss chord at joint(s) 3, 10.
11) Hanger(s) or other connection device(s) shall be provided sufficient to support concentrated load(s) 242 lb down and 211 lb up at 5-0-0, 242 lb down and 211 lb up at 7-0-12, 230 lb down and 211 lb up at 9-0-12, 214 lb down and 211 lb up at 11-2-8, 231 lb down and 211 lb up at 13-4-4, and 242 lb down and 211 lb up at 15-4-4, and 242 lb down and 211 lb up at 17-5-0 on top chord, and 547 lb down and 641 lb up at 5-0-0, 190 lb down and 226 lb up at 7-0-12, 190 lb down and 226 lb up at 9-0-12, 190 lb down and 226 lb up at 11-2-8, 190 lb down and 226 lb up at 13-4-4, and 190 lb down and 226 lb up at 15-4-4, and 547 lb down and 641 lb up at 17-4-4 on bottom chord. The design/selection of such connection device(s) is the responsibility of others.
12) All truss to truss connection by TCI are on the Truss Placement plan.
13) ARMANDO R. PEREZ PE. # 28026 Ph: (305) 882-8826

LOAD CASE(S) Standard
Continued on page 2

LOAD CASE(S) Standard

1) Dead + Roof Live (balanced): Lumber Increase=1.33, Plate Increase=1.33

Uniform Loads (plf)

Vert: 1-3=-90, 3-4=-111, 4-5=-90, 5-8=-90, 8-9=-90, 9-10=-111, 10-12=-90, 4-9=-20

Concentrated Loads (lb)

Vert: 5=-6(B) 8=-6(B) 17=-401(B) 6=-6(B) 16=-159(B) 7=-6(B) 15=-159(B) 13=-401(B) 23=-6(B) 24=-6(B) 25=-6(B) 27=-159(B) 28=-159(B) 29=-159(B)

Job	Truss	Truss Type	Qty	Ply	12715 ROLLING ROAD DR, PINECREST, FL.
12715	HG10	HIP GIRDER	1	2	Job Reference (optional)

Trusscorp Int., 9590 NW 89 AVE, Medley, FL

8.820 s Dec 4 2024 MiTek Industries, Inc. Thu Jun 5 12:43:25 2025 Page 1
ID:_GLN6EJBZ1GCD23RDL_tAxzKvJz-tkMVa8Mp7HbynlLQlu86gF7vVjktLIvn5jtRoEz9LNG

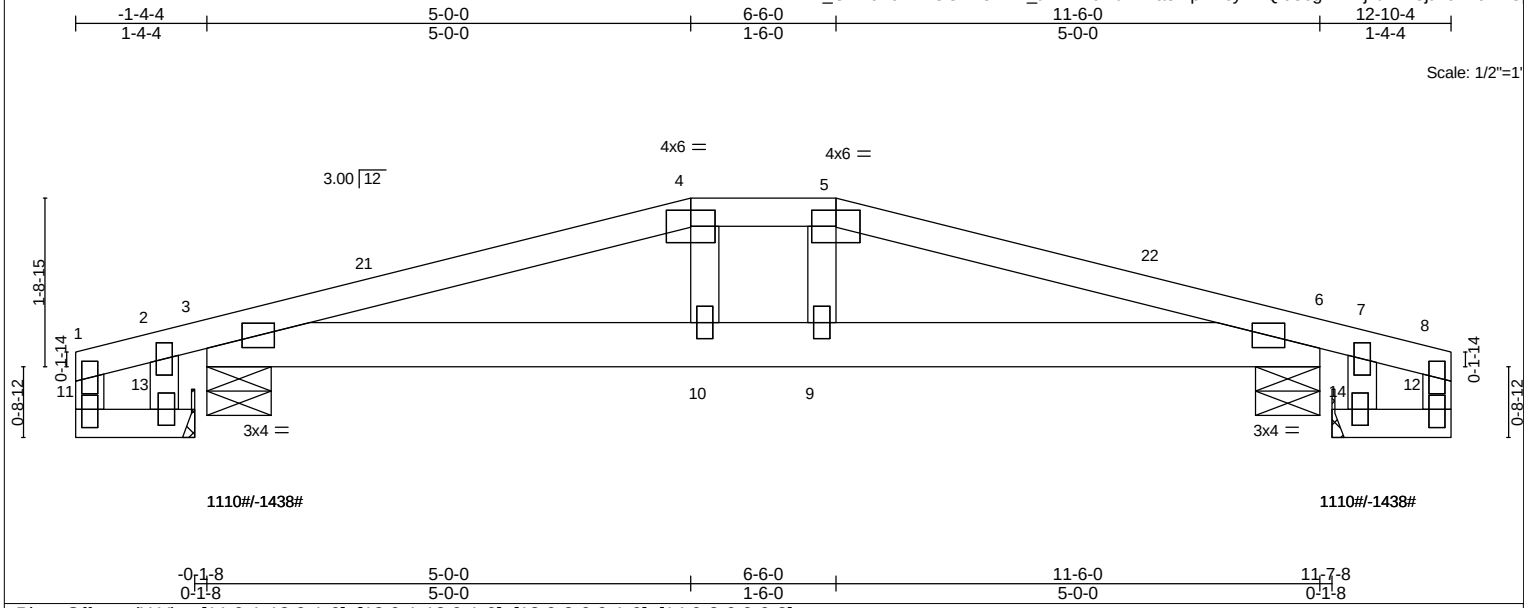

Plate Offsets (X,Y)-- [11:0-1-12,0-1-0], [12:0-1-12,0-1-0], [13:0-2-0,0-1-0], [14:0-2-0,0-0-8]

LOADING (psf)		SPACING-	2-0-0	CSI.		DEFL.	in	(loc)	l/defl	L/d	PLATES	GRIP
TCLL	30.0	Plate Grip DOL	1.33	TC	0.49	Vert(LL)	0.08	9-10	>999	360	MT20	244/190
TCDL	15.0	Lumber DOL	1.33	BC	0.28	Vert(CT)	-0.07	10	>999	180		
BCLL	0.0	Rep Stress Incr	NO	WB	0.07	Horz(CT)	-0.01	6	n/a	n/a		
BCDL	10.0	Code FBC2020/TPI2014		Matrix-MSH							Weight: 116 lb	FT = 0%

LUMBER-
TOP CHORD 2x4 SP No.2
BOT CHORD 2x6 SP No.2
WEBS 2x4 SP No.3
OTHERS 2x4 SP No.3

BRACING-
TOP CHORD Structural wood sheathing directly applied or 6-0-0 oc purlins.
BOT CHORD Rigid ceiling directly applied or 8-10-10 oc bracing.

REACTIONS. (lb/size) 3=1110/0-8-0 (min. 0-1-8), 6=1110/0-8-0 (min. 0-1-8), 13=0/Mechanical, 14=0/Mechanical
Max Uplift3=-1438(LC 4), 6=-1438(LC 4)

FORCES. (lb) - Max. Comp./Max. Ten. - All forces 250 (lb) or less except when shown.
TOP CHORD 3-21=-2705/3442, 4-21=-2689/3450, 4-5=-2669/3449, 5-22=-2689/3450, 6-22=-2705/3442
BOT CHORD 3-10=-3176/2553, 9-10=-3214/2594, 6-9=-3176/2553
WEBS 4-10=-363/385, 5-9=-363/385

NOTES- (12-13)
1) 2-ply truss to be connected together with 16d (0.131"x 3.5") nails as follows:
Top chords connected as follows: 2x4 - 1 row at 0-9-0 oc clinched.
Bottom chords connected as follows: 2x6 - 2 rows staggered at 0-9-0 oc clinched.
Webs connected as follows: 2x4 - 2 rows staggered at 0-3-0 oc clinched, Except member 1-11 2x4 - 1 row at 0-9-0 oc clinched, member 2-13 2x4 - 1 row at 0-9-0 oc clinched, member 8-12 2x4 - 1 row at 0-9-0 oc clinched, member 7-14 2x4 - 1 row at 0-9-0 oc clinched.
2) All loads are considered equally applied to all plies, except if noted as front (F) or back (B) face in the LOAD CASE(S) section. Ply to ply connections have been provided to distribute only loads noted as (F) or (B), unless otherwise indicated.
3) Unbalanced roof live loads have been considered for this design.
4) Wind: ASCE 7-16; Vult=175mph (3-second gust) Vasd=136mph; HVHZ; TCDL=5.0psf; BCDL=5.0psf; h=28ft; Cat. II; Exp C; Encl., GCpi=0.18; C-C Exterior(2E) -1-2-8 to 1-9-8, Exterior(2R) 1-9-8 to 9-8-8, Exterior(2E) 9-8-8 to 12-8-8; Lumber DOL=1.60 plate grip DOL=1.60
5) Building Designer / Project engineer responsible for verifying applied roof live load shown covers rain loading requirements specific to the use of this truss component.
6) Provide adequate drainage to prevent water ponding.
7) All plates are 2x4 MT20 unless otherwise indicated.
8) This truss has been designed for a 10.0 psf bottom chord live load nonconcurrent with any other live loads.
9) Refer to girder(s) for truss to truss connections.
10) Provide mechanical connection (by others) of truss to bearing plate capable of withstanding 1438 lb uplift at joint 3 and 1438 lb uplift at joint 6.
11) Hanger(s) or other connection device(s) shall be provided sufficient to support concentrated load(s) 305 lb down and 330 lb up at 5-0-0, and 305 lb down and 330 lb up at 6-6-0 on top chord, and 373 lb down and 421 lb up at 5-0-0, and 373 lb down and 421 lb up at 6-5-4 on bottom chord. The design/selection of such connection device(s) is the responsibility of others.
12) All truss to truss connection by TCI are on the Truss Placement plan.
13) ARMANDO R. PEREZ PE. # 28026 Ph: (305) 882-8826

LOAD CASE(S) Standard
1) Dead + Roof Live (balanced): Lumber Increase=1.33, Plate Increase=1.33
Uniform Loads (plf)
Vert: 1-4=-90, 4-5=-90, 5-8=-90, 15-18=-20
Concentrated Loads (lb)
Vert: 4=-83(B) 5=-83(B) 10=-286(B) 9=-286(B)

Job	Truss	Truss Type	Qty	Ply	12715 ROLLING ROAD DR, PINECREST, FL.
12715	HG11T	HIP GIRDER	1	2	Job Reference (optional)

Trusscorp Int., 9590 NW 89 AVE, Medley, FL

8.820 s Dec 4 2024 MiTek Industries, Inc. Thu Jun 5 12:43:28 2025 Page 1
ID:_GLN6EJBZ1GCD23RDL_tAxzKvJz-IJ2dD9OhQCzXeD4_Q0hpItlI6werYazDnh55PZz9LND

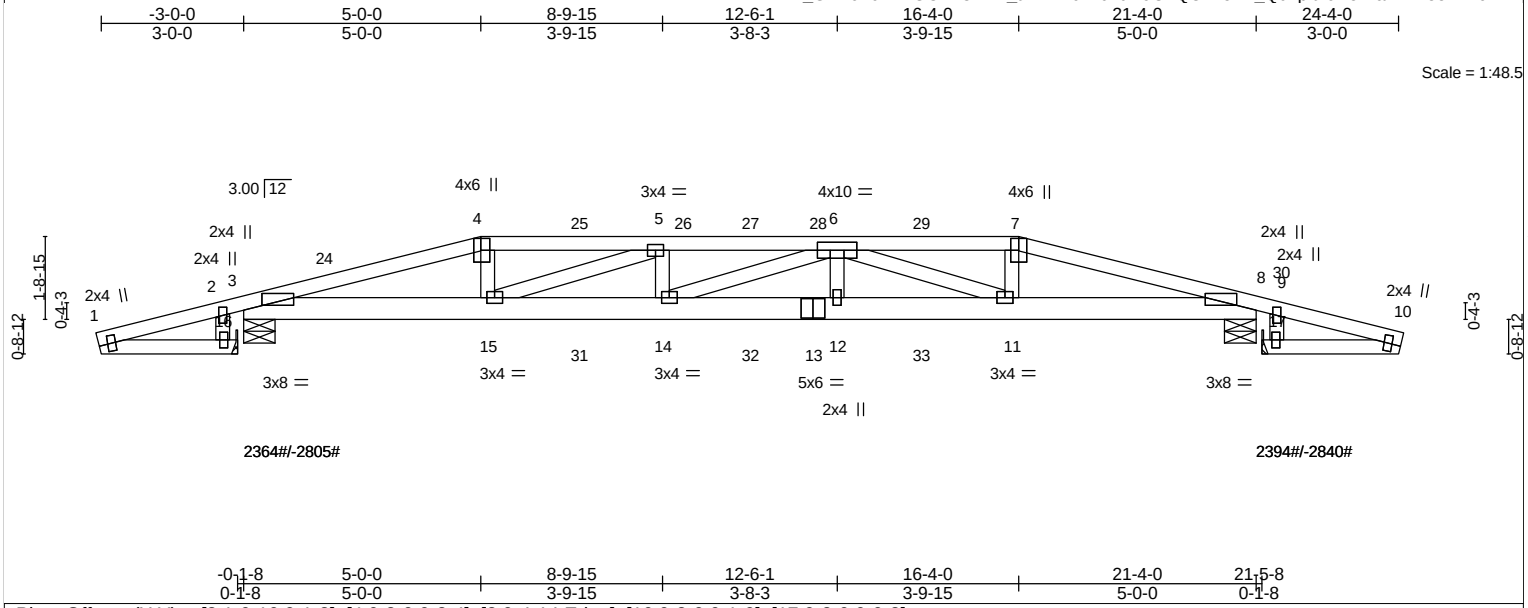

Plate Offsets (X,Y)-- [3:1-0-10,0-1-3], [4:0-3-0,0-2-4], [8:0-4-14,Edge], [16:0-2-0,0-1-0], [17:0-2-0,0-0-8]

LOADING (psf)		**SPACING-**	2-0-0	**CSI.**		**DEFL.**	in	(loc)	l/defl	L/d	**PLATES**	**GRIP**
TCLL	30.0	Plate Grip DOL	1.33	TC	0.98	Vert(LL)	0.49	12-14	>523	360	MT20	244/190
TCDL	15.0	Lumber DOL	1.33	BC	0.71	Vert(CT)	0.42	12-14	>607	180		
BCLL	0.0	Rep Stress Incr	NO	WB	0.43	Horz(CT)	-0.07	8	n/a	n/a		
BCDL	10.0	Code FBC2020/TPI2014		Matrix-MSH							Weight: 247 lb	FT = 0%

LUMBER-
TOP CHORD 2x4 SP No.2 *Except*
T2: 2x4 SP No.1
BOT CHORD 2x6 SP No.2
WEBS 2x4 SP No.3
OTHERS 2x4 SP No.3

BRACING-
TOP CHORD Structural wood sheathing directly applied or 4-7-4 oc purlins.
BOT CHORD Rigid ceiling directly applied or 5-1-0 oc bracing.

REACTIONS. (lb/size) 3=2087/0-8-0 (min. 0-1-8), 16=0/Mechanical, 17=0/Mechanical, 8=2114/0-8-0 (min. 0-1-8)
Max Horz 3=594(LC 9), 16=623(LC 13), 17=-792(LC 13)
Max Uplift3=-2805(LC 4), 8=-2840(LC 4)
Max Grav 3=2364(LC 14), 8=2394(LC 14)

FORCES. (lb) - Max. Comp./Max. Ten. - All forces 250 (lb) or less except when shown.
TOP CHORD 1-2=-595/512, 2-3=-598/525, 3-24=-2004/2239, 3-4=-6110/7136, 4-25=-6042/7087, 5-25=-6042/7087, 5-26=-8080/9502, 26-27=-8080/9502, 27-28=-8080/9502, 6-28=-8080/9502, 6-29=-5809/6811, 7-29=-5809/6811, 7-8=-5876/6859, 8-30=-1417/1551, 8-9=-762/758, 9-10=-756/742
BOT CHORD 3-15=-6225/5323, 15-31=-8751/7470, 14-31=-8751/7470, 14-32=-8771/7488, 13-32=-8771/7488, 12-13=-8771/7488, 12-33=-8771/7488, 11-33=-8771/7488, 8-11=-5952/5092
WEBS 4-15=-1053/1038, 5-15=-2174/2576, 6-12=-138/296, 6-11=-2442/2892, 7-11=-1020/1009, 1-16=-519/624, 10-17=-760/794

NOTES- (11-12)
1) 2-ply truss to be connected together with 16d (0.131"x 3.5") nails as follows:
Top chords connected as follows: 2x4 - 1 row at 0-9-0 oc clinched.
Bottom chords connected as follows: 2x6 - 2 rows staggered at 0-9-0 oc clinched.
Webs connected as follows: 2x4 - 2 rows staggered at 0-3-0 oc clinched, Except member 15-5 2x4 - 1 row at 0-9-0 oc clinched, member 5-14 2x4 - 1 row at 0-2-0 oc clinched, member 14-6 2x4 - 1 row at 0-9-0 oc clinched, member 6-12 2x4 - 1 row at 0-9-0 oc clinched, member 11-6 2x4 - 1 row at 0-9-0 oc clinched.
2) All loads are considered equally applied to all plies, except if noted as front (F) or back (B) face in the LOAD CASE(S) section. Ply to ply connections have been provided to distribute only loads noted as (F) or (B), unless otherwise indicated.
3) Unbalanced roof live loads have been considered for this design.
4) Wind: ASCE 7-16; Vult=175mph (3-second gust) Vasd=136mph; HVHZ; TCDL=5.0psf; BCDL=5.0psf; h=28ft; Cat. II; Exp C; Part. Encl., GCpi=0.55; C-C Exterior(2E) -3-0-15 to 0-0-0, Interior(1) 0-0-0 to 0-9-1, Exterior(2R) 0-9-1 to 9-2-15, Interior(1) 9-2-15 to 12-1-1, Exterior(2R) 12-1-1 to 20-6-15, Interior(1) 20-6-15 to 21-4-0, Exterior(2E) 21-4-0 to 24-4-15; Lumber DOL=1.60 plate grip DOL=1.60
5) Building Designer / Project engineer responsible for verifying applied roof live load shown covers rain loading requirements specific to the use of this truss component.
6) Provide adequate drainage to prevent water ponding.
7) This truss has been designed for a 10.0 psf bottom chord live load nonconcurrent with any other live loads.
8) Refer to girder(s) for truss to truss connections.
9) Provide mechanical connection (by others) of truss to bearing plate capable of withstanding 2805 lb uplift at joint 3 and 2840 lb uplift at joint 8.
10) Hanger(s) or other connection device(s) shall be provided sufficient to support concentrated load(s) 338 lb down and 388 lb up at 5-0-0, 338 lb down and 388 lb up at 7-0-12, 325 lb down and 388 lb up at 9-0-12, 307 lb down and 388 lb up at 10-8-0, 325 lb down and 388 lb up at 12-3-4, and 338 lb down and 388 lb up at 14-3-4, and 338 lb down and 388 lb up at 16-4-0 on top chord, and 435 lb down and 482 lb up at 5-0-0, 43 lb down and 25 lb up at 7-0-12, 43 lb down and 25 lb up at 9-0-12, 43 lb down and 25 lb up at 10-8-0, 43 lb down and 25 lb up at 12-3-4, and 43 lb down and 25 lb up at 14-3-4, and 435 lb down and 482 lb up at 16-3-4 on bottom chord. The design/selection of such connection device(s) is the responsibility of others.
11) All truss to truss connection by TCI are on the Truss Placement plan.
12) ARMANDO R. PEREZ PE. # 28026 Ph: (305) 882-8826

Continued on page 2

LOAD CASE(S) Standard

1) Dead + Roof Live (balanced): Lumber Increase=1.33, Plate Increase=1.33
   Uniform Loads (plf)
      Vert: 1-4=-90, 4-7=-90, 7-10=-90, 18-21=-20
   Concentrated Loads (lb)
      Vert: 4=-83(F) 7=-83(F) 13=-30(F) 15=-286(F) 5=-83(F) 14=-30(F) 11=-286(F) 25=-83(F) 27=-83(F) 28=-83(F) 29=-83(F) 31=-30(F) 32=-30(F) 33=-30(F)

Job	Truss	Truss Type	Qty	Ply	12715 ROLLING ROAD DR, PINECREST, FL.
12715	J1	Jack-Open	16	1	Job Reference (optional)

Trusscorp Int., 9590 NW 89 AVE, Medley, FL

8.820 s Dec 4 2024 MiTek Industries, Inc. Thu Jun 5 12:43:30 2025 Page 1
ID:_GLN6EJBZ1GCD23RDL_tAxzKvJz-Ei9OerQxyqDEuXENYRjHNIropkUL?YVWE?aCTRz9LNB

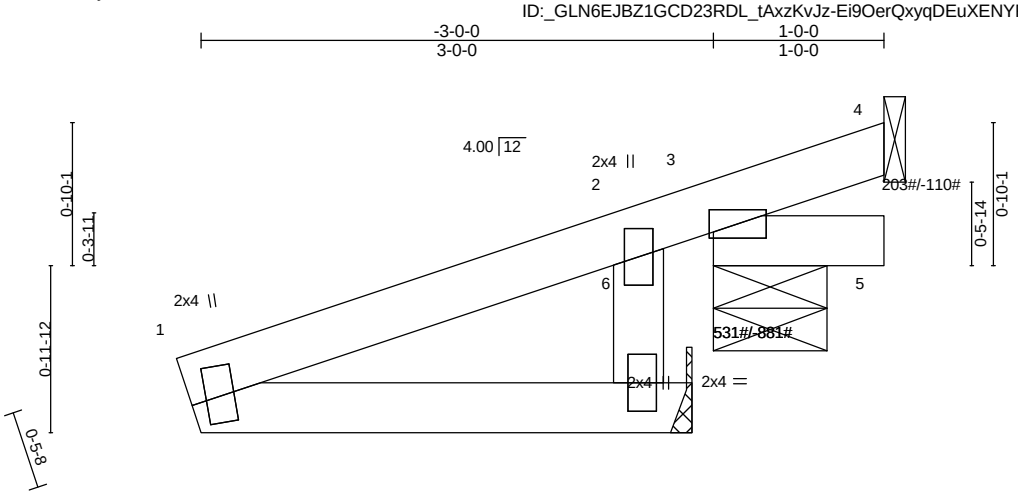

Plate Offsets (X,Y)-- [1:0-2-7,0-1-1], [6:0-2-0,0-1-0]

LOADING (psf)		**SPACING-** 2-0-0		**CSI.**		**DEFL.**	in	(loc)	l/defl	L/d	**PLATES**	**GRIP**
TCLL	30.0	Plate Grip DOL	1.33	TC	0.33	Vert(LL)	-0.01	5	>999	360	MT20	244/190
TCDL	15.0	Lumber DOL	1.33	BC	0.07	Vert(CT)	-0.01	5	>999	180		
BCLL	0.0	Rep Stress Incr	YES	WB	0.17	Horz(CT)	0.00	3	n/a	n/a		
BCDL	10.0	Code FBC2020/TPI2014		Matrix-MP							Weight: 14 lb	FT = 0%

LUMBER-
TOP CHORD 2x4 SP No.2
BOT CHORD 2x4 SP No.2
OTHERS 2x4 SP No.3

BRACING-
TOP CHORD Structural wood sheathing directly applied or 1-0-0 oc purlins.
BOT CHORD Rigid ceiling directly applied or 10-0-0 oc bracing.

MiTek recommends that Stabilizers and required cross bracing be installed during truss erection, in accordance with Stabilizer Installation guide.

REACTIONS. (lb/size) 4=-108/Mechanical, 3=496/0-8-0 (min. 0-1-8), 6=-0/Mechanical
Max Horz 3=-337(LC 4), 6=580(LC 4)
Max Uplift4=-110(LC 5), 3=-881(LC 4)
Max Grav 4=203(LC 4), 3=531(LC 5)

FORCES. (lb) - Max. Comp./Max. Ten. - All forces 250 (lb) or less except when shown.
TOP CHORD 1-2=-539/334, 2-3=-541/352
WEBS 1-6=-325/581

NOTES- (7-8)
1) Wind: ASCE 7-16; Vult=175mph (3-second gust) Vasd=136mph; HVHZ; TCDL=5.0psf; BCDL=5.0psf; h=28ft; Cat. II; Exp C; Encl., GCpi=0.18; C-C Exterior(2E); Lumber DOL=1.60 plate grip DOL=1.60
2) Building Designer / Project engineer responsible for verifying applied roof live load shown covers rain loading requirements specific to the use of this truss component.
3) This truss has been designed for a 10.0 psf bottom chord live load nonconcurrent with any other live loads.
4) Refer to girder(s) for truss to truss connections.
5) Refer to girder(s) for truss to truss connections.
6) Provide mechanical connection (by others) of truss to bearing plate capable of withstanding 110 lb uplift at joint 4 and 881 lb uplift at joint 3.
7) All truss to truss connection by TCI are on the Truss Placement plan.
8) ARMANDO R. PEREZ PE. # 28026 Ph: (305) 882-8826

LOAD CASE(S) Standard

Job	Truss	Truss Type	Qty	Ply	12715 ROLLING ROAD DR, PINECREST, FL.
12715	J1A	JACK-OPEN	26	1	Job Reference (optional)

Trusscorp Int., 9590 NW 89 AVE, Medley, FL

8.820 s Dec 4 2024 MiTek Industries, Inc. Thu Jun 5 12:43:33 2025 Page 1
ID:_GLN6EJBZ1GCD23RDL_tAxzKvJz-eHrWGtSqElbpl_zyDaH_?xTJvxW5Cunywzps4mz9LN8

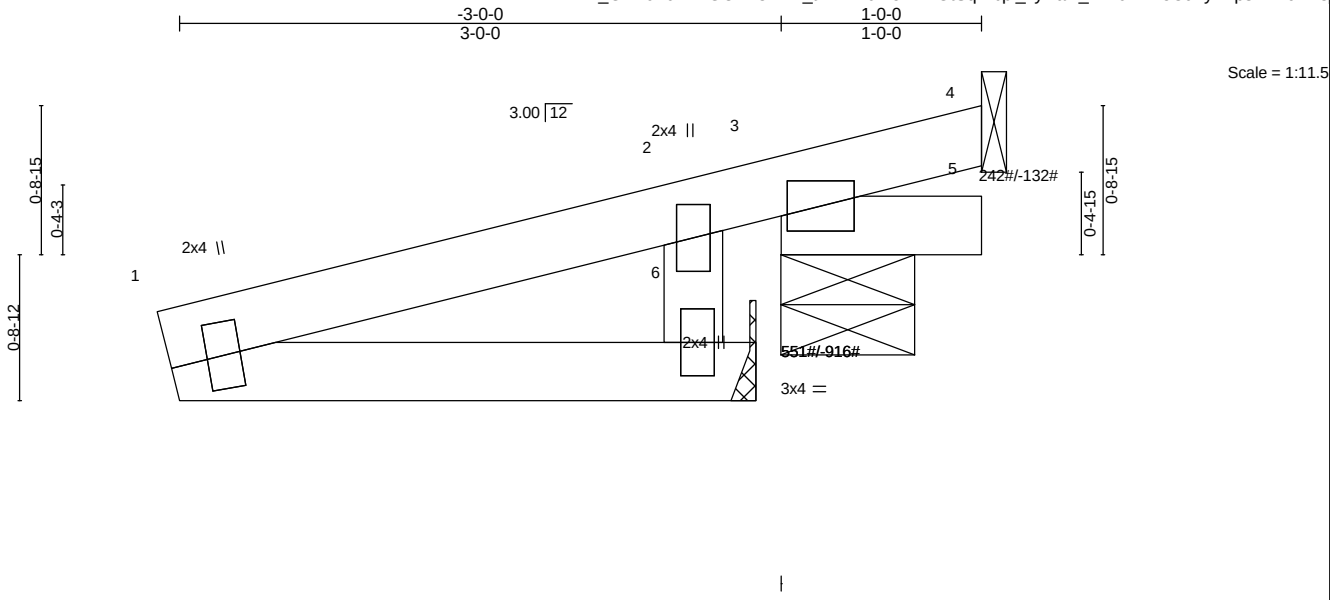

Plate Offsets (X,Y)-- [6:0-2-0,0-1-0]

LOADING (psf)		**SPACING-**	2-0-0	**CSI.**		**DEFL.**	in	(loc)	l/defl	L/d	**PLATES**	**GRIP**
TCLL	30.0	Plate Grip DOL	1.33	TC	0.34	Vert(LL)	0.00	5	>999	360	MT20	244/190
TCDL	15.0	Lumber DOL	1.33	BC	0.07	Vert(CT)	0.00	5	>999	180		
BCLL	0.0	Rep Stress Incr	YES	WB	0.20	Horz(CT)	0.00	3	n/a	n/a		
BCDL	10.0	Code FBC2020/TPI2014		Matrix-MP							Weight: 13 lb	FT = 0%

LUMBER-
TOP CHORD 2x4 SP No.2
BOT CHORD 2x4 SP No.2
OTHERS 2x4 SP No.3

BRACING-
TOP CHORD Structural wood sheathing directly applied or 1-0-0 oc purlins.
BOT CHORD Rigid ceiling directly applied or 10-0-0 oc bracing.

MiTek recommends that Stabilizers and required cross bracing be installed during truss erection, in accordance with Stabilizer Installation guide.

REACTIONS. (lb/size) 4=-127/Mechanical, 3=512/0-8-0 (min. 0-1-8), 6=0/Mechanical
Max Horz 3=-495(LC 4), 6=676(LC 4)
Max Uplift4=-132(LC 5), 3=-916(LC 4)
Max Grav 4=242(LC 4), 3=551(LC 5)

FORCES. (lb) - Max. Comp./Max. Ten. - All forces 250 (lb) or less except when shown.
TOP CHORD 1-2=-645/387, 2-3=-649/395
WEBS 1-6=-385/677

NOTES- (7-8)
1) Wind: ASCE 7-16; Vult=175mph (3-second gust) Vasd=136mph; HVHZ; TCDL=5.0psf; BCDL=5.0psf; h=28ft; Cat. II; Exp C; Encl., GCpi=0.18; C-C Exterior(2E); Lumber DOL=1.60 plate grip DOL=1.60
2) Building Designer / Project engineer responsible for verifying applied roof live load shown covers rain loading requirements specific to the use of this truss component.
3) This truss has been designed for a 10.0 psf bottom chord live load nonconcurrent with any other live loads.
4) Refer to girder(s) for truss to truss connections.
5) Refer to girder(s) for truss to truss connections.
6) Provide mechanical connection (by others) of truss to bearing plate capable of withstanding 132 lb uplift at joint 4 and 916 lb uplift at joint 3.
7) All truss to truss connection by TCI are on the Truss Placement plan.
8) ARMANDO R. PEREZ PE. # 28026 Ph: (305) 882-8826

LOAD CASE(S) Standard

Job	Truss	Truss Type	Qty	Ply	12715 ROLLING ROAD DR, PINECREST, FL.
12715	J2	JACK-OPEN	16	1	Job Reference (optional)

Trusscorp Int., 9590 NW 89 AVE, Medley, FL

8.820 s Dec 4 2024 MiTek Industries, Inc. Thu Jun 5 12:43:36 2025 Page 1
ID:_GLN6EJBZ1GCD23RDL_tAxzKvJz-3sWfuvViXgzOcShXuiqhdZ5sG9VQPIgOcw1Wh5z9LN5

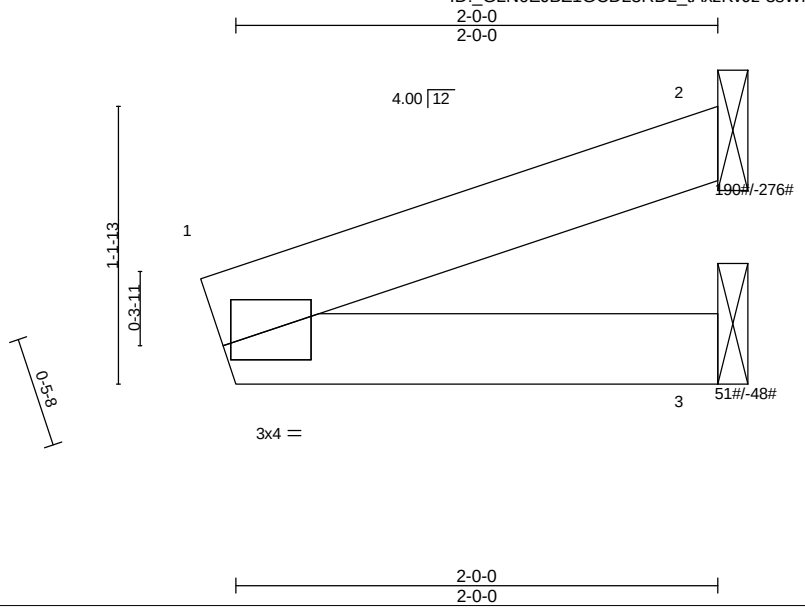

LOADING (psf)		SPACING-	2-0-0	CSI.		DEFL.	in	(loc)	l/defl	L/d	PLATES	GRIP
TCLL	30.0	Plate Grip DOL	1.33	TC	0.14	Vert(LL)	-0.00	6	n/r	180	MT20	244/190
TCDL	15.0	Lumber DOL	1.33	BC	0.22	Vert(CT)	-0.00	6	n/r	80		
BCLL	0.0	Rep Stress Incr	YES	WB	0.00	Horz(CT)	0.00		n/a	n/a		
BCDL	10.0	Code FBC2020/TPI2014		Matrix-MP							Weight: 6 lb	FT = 0%

LUMBER-
TOP CHORD 2x4 SP No.2
BOT CHORD 2x4 SP No.2

BRACING-
TOP CHORD Structural wood sheathing directly applied or 2-0-0 oc purlins.
BOT CHORD Rigid ceiling directly applied or 6-0-0 oc bracing.

MiTek recommends that Stabilizers and required cross bracing be installed during truss erection, in accordance with Stabilizer Installation guide.

REACTIONS. (lb/size) 2=178/Mechanical, 3=46/Mechanical
Max Horz 2=-317(LC 4), 3=438(LC 4)
Max Uplift2=-276(LC 4), 3=-48(LC 4)
Max Grav 2=190(LC 5), 3=51(LC 5)

FORCES. (lb) - Max. Comp./Max. Ten. - All forces 250 (lb) or less except when shown.
TOP CHORD 1-2=-392/308
BOT CHORD 1-3=-309/438

NOTES- (7-8)
1) Wind: ASCE 7-16; Vult=175mph (3-second gust) Vasd=136mph; HVHZ; TCDL=5.0psf; BCDL=5.0psf; h=28ft; Cat. II; Exp C; Encl., GCpi=0.18; C-C Exterior(2E); Lumber DOL=1.60 plate grip DOL=1.60
2) Building Designer / Project engineer responsible for verifying applied roof live load shown covers rain loading requirements specific to the use of this truss component.
3) This truss has been designed for a 10.0 psf bottom chord live load nonconcurrent with any other live loads.
4) Refer to girder(s) for truss to truss connections.
5) Provide mechanical connection (by others) of truss to bearing plate capable of withstanding 276 lb uplift at joint 2 and 48 lb uplift at joint 3.
6) Non Standard bearing condition. Review required.
7) All truss to truss connection by TCI are on the Truss Placement plan.
8) ARMANDO R. PEREZ PE. # 28026 Ph: (305) 882-8826

LOAD CASE(S) Standard

Job	Truss	Truss Type	Qty	Ply	12715 ROLLING ROAD DR, PINECREST, FL.
12715	J2A	JACK-OPEN	26	1	Job Reference (optional)

Trusscorp Int., 9590 NW 89 AVE, Medley, FL

8.820 s Dec 4 2024 MiTek Industries, Inc. Thu Jun 5 12:43:39 2025 Page 1
ID:_GLN6EJBZ1GCD23RDL_tAxzKvJz-TRCoWwXbqbLzTvQ6aqOOFCjNKMXxcfPrJuGAIQz9LN2

Scale = 1:8.5

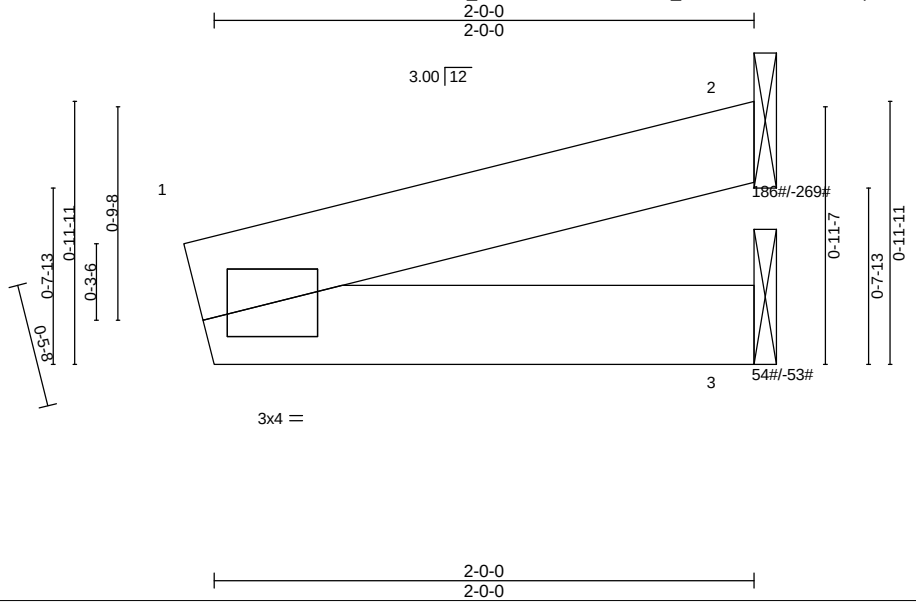

LOADING (psf)		**SPACING-**	2-0-0	**CSI.**		**DEFL.**	in	(loc)	l/defl	L/d	**PLATES**	**GRIP**
TCLL	30.0	Plate Grip DOL	1.33	TC	0.15	Vert(LL)	-0.00	6	n/r	180	MT20	244/190
TCDL	15.0	Lumber DOL	1.33	BC	0.23	Vert(CT)	-0.00	6	n/r	80		
BCLL	0.0	Rep Stress Incr	YES	WB	0.00	Horz(CT)	0.00		n/a	n/a		
BCDL	10.0	Code FBC2020/TPI2014		Matrix-MP							Weight: 6 lb	FT = 0%

LUMBER-
TOP CHORD 2x4 SP No.2
BOT CHORD 2x4 SP No.2

BRACING-
TOP CHORD Structural wood sheathing directly applied or 2-0-0 oc purlins.
BOT CHORD Rigid ceiling directly applied or 6-0-0 oc bracing.

MiTek recommends that Stabilizers and required cross bracing be installed during truss erection, in accordance with Stabilizer Installation guide.

REACTIONS. (lb/size) 2=173/Mechanical, 3=50/Mechanical
Max Horz 2=-428(LC 4), 3=519(LC 4)
Max Uplift 2=-269(LC 4), 3=-53(LC 4)
Max Grav 2=186(LC 5), 3=54(LC 5)

FORCES. (lb) - Max. Comp./Max. Ten. - All forces 250 (lb) or less except when shown.
TOP CHORD 1-2=-484/373
BOT CHORD 1-3=-374/519

NOTES- (7-8)
1) Wind: ASCE 7-16; Vult=175mph (3-second gust) Vasd=136mph; HVHZ; TCDL=5.0psf; BCDL=5.0psf; h=28ft; Cat. II; Exp C; Encl., GCpi=0.18; C-C Exterior(2E); Lumber DOL=1.60 plate grip DOL=1.60
2) Building Designer / Project engineer responsible for verifying applied roof live load shown covers rain loading requirements specific to the use of this truss component.
3) This truss has been designed for a 10.0 psf bottom chord live load nonconcurrent with any other live loads.
4) Refer to girder(s) for truss to truss connections.
5) Provide mechanical connection (by others) of truss to bearing plate capable of withstanding 269 lb uplift at joint 2 and 53 lb uplift at joint 3.
6) Non Standard bearing condition. Review required.
7) All truss to truss connection by TCI are on the Truss Placement plan.
8) ARMANDO R. PEREZ PE. # 28026 Ph: (305) 882-8826

LOAD CASE(S) Standard

Job	Truss	Truss Type	Qty	Ply	12715 ROLLING ROAD DR, PINECREST, FL.
12715	J3	Jack-Open	6	1	Job Reference (optional)

Trusscorp Int., 9590 NW 89 AVE, Medley, FL

8.820 s Dec 4 2024 MiTek Industries, Inc. Thu Jun 5 12:43:40 2025 Page 1
ID:_GLN6EJBZ1GCD23RDL_tAxzKvJz-xdmAkGYDbuUq53?I7YvdnPFVumvsL41_XY?kqsz9LN1

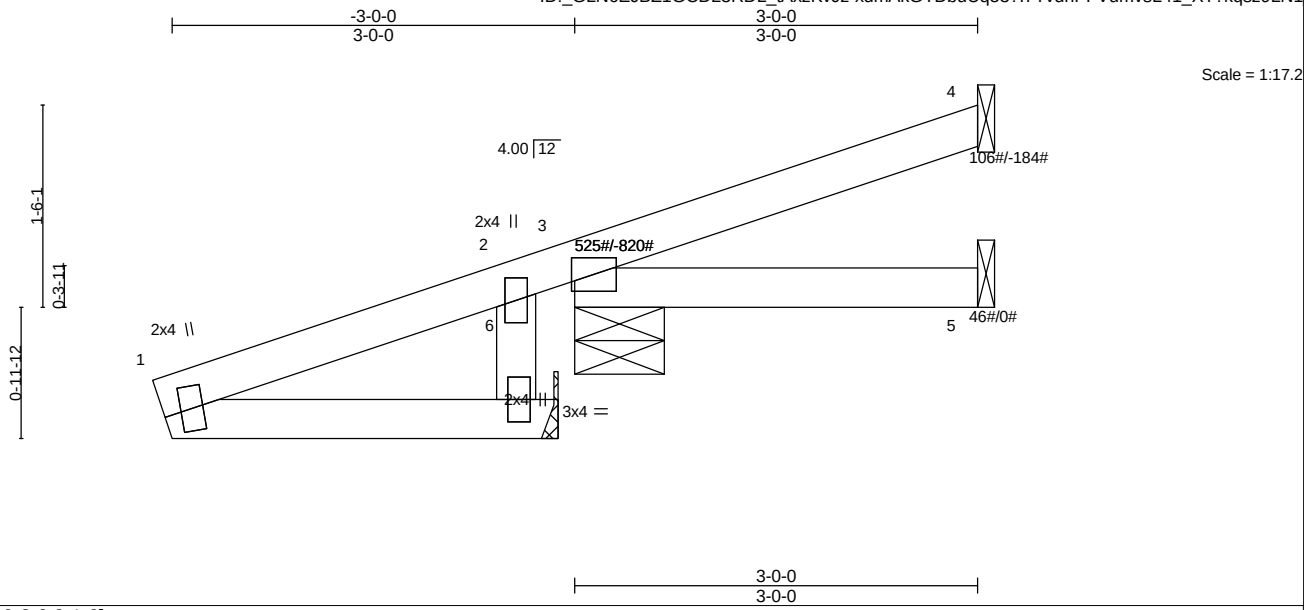

Plate Offsets (X,Y)-- [6:0-2-0,0-1-0]

LOADING (psf)		**SPACING-** 2-0-0		**CSI.**		**DEFL.**	in	(loc)	l/defl	L/d	**PLATES**	**GRIP**
TCLL	30.0	Plate Grip DOL	1.33	TC	0.35	Vert(LL)	-0.00	5-9	>999	360	MT20	244/190
TCDL	15.0	Lumber DOL	1.33	BC	0.06	Vert(CT)	-0.00	5-9	>999	180		
BCLL	0.0	Rep Stress Incr	YES	WB	0.17	Horz(CT)	0.00	3	n/a	n/a		
BCDL	10.0	Code FBC2020/TPI2014		Matrix-MP							Weight: 20 lb	FT = 0%

LUMBER-
TOP CHORD 2x4 SP No.2
BOT CHORD 2x4 SP No.2
OTHERS 2x4 SP No.3

BRACING-
TOP CHORD Structural wood sheathing directly applied or 3-0-0 oc purlins.
BOT CHORD Rigid ceiling directly applied or 10-0-0 oc bracing.

MiTek recommends that Stabilizers and required cross bracing be installed during truss erection, in accordance with Stabilizer Installation guide.

REACTIONS. (lb/size) 4=88/Mechanical, 3=498/0-8-0 (min. 0-1-8), 5=17/Mechanical, 6=-0/Mechanical
Max Horz 3=270(LC 1), 6=565(LC 4)
Max Uplift4=-184(LC 4), 3=-820(LC 4)
Max Grav 4=106(LC 5), 3=525(LC 5), 5=46(LC 3)

FORCES. (lb) - Max. Comp./Max. Ten. - All forces 250 (lb) or less except when shown.
TOP CHORD 1-2=-525/327, 2-3=-528/345
WEBS 1-6=-314/566

NOTES- (7-8)
1) Wind: ASCE 7-16; Vult=175mph (3-second gust) Vasd=136mph; HVHZ; TCDL=5.0psf; BCDL=5.0psf; h=28ft; Cat. II; Exp C; Encl., GCpi=0.18; C-C Exterior(2E); Lumber DOL=1.60 plate grip DOL=1.60
2) Building Designer / Project engineer responsible for verifying applied roof live load shown covers rain loading requirements specific to the use of this truss component.
3) This truss has been designed for a 10.0 psf bottom chord live load nonconcurrent with any other live loads.
4) Refer to girder(s) for truss to truss connections.
5) Refer to girder(s) for truss to truss connections.
6) Provide mechanical connection (by others) of truss to bearing plate capable of withstanding 184 lb uplift at joint 4 and 820 lb uplift at joint 3.
7) All truss to truss connection by TCI are on the Truss Placement plan.
8) ARMANDO R. PEREZ PE. # 28026 Ph: (305) 882-8826

LOAD CASE(S) Standard

Job	Truss	Truss Type	Qty	Ply	12715 ROLLING ROAD DR, PINECREST, FL.
12715	J3A	Jack-Open	12	1	Job Reference (optional)

Trusscorp Int., 9590 NW 89 AVE, Medley, FL

8.820 s Dec 4 2024 MiTek Industries, Inc. Thu Jun 5 12:43:42 2025 Page 1
ID:_GLN6EJBZ1GCD23RDL_tAxzKvJz-u0uw9yZT7WkXKN9hFzx5sqLrYaa6py1H?sUqvlz9LN?

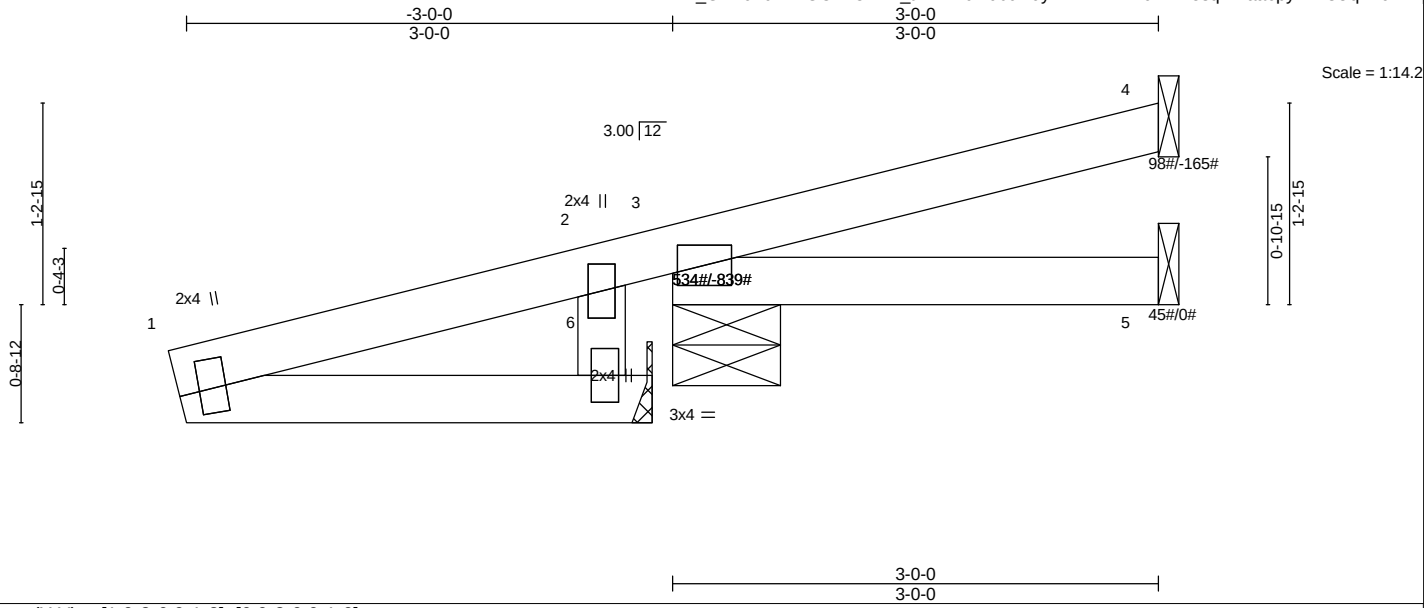

Plate Offsets (X,Y)-- [1:0-2-6,0-1-8], [6:0-2-0,0-1-0]

LOADING (psf)		**SPACING-**	2-0-0	**CSI.**		**DEFL.**	in	(loc)	l/defl	L/d	**PLATES**	**GRIP**
TCLL	30.0	Plate Grip DOL	1.33	TC	0.34	Vert(LL)	-0.00	5-9	>999	360	MT20	244/190
TCDL	15.0	Lumber DOL	1.33	BC	0.07	Vert(CT)	-0.00	5-9	>999	180		
BCLL	0.0	Rep Stress Incr	YES	WB	0.20	Horz(CT)	0.00	3	n/a	n/a		
BCDL	10.0	Code FBC2020/TPI2014		Matrix-MP							Weight: 19 lb	FT = 0%

LUMBER-
TOP CHORD 2x4 SP No.2
BOT CHORD 2x4 SP No.2
OTHERS 2x4 SP No.3

BRACING-
TOP CHORD Structural wood sheathing directly applied or 3-0-0 oc purlins.
BOT CHORD Rigid ceiling directly applied or 10-0-0 oc bracing.

MiTek recommends that Stabilizers and required cross bracing be installed during truss erection, in accordance with Stabilizer Installation guide.

REACTIONS. (lb/size) 4=84/Mechanical, 3=500/0-8-0 (min. 0-1-8), 5=16/Mechanical, 6=-0/Mechanical
Max Horz 3=-403(LC 4), 6=671(LC 4)
Max Uplift4=-165(LC 4), 3=-839(LC 4)
Max Grav 4=98(LC 5), 3=534(LC 5), 5=45(LC 3)

FORCES. (lb) - Max. Comp./Max. Ten. - All forces 250 (lb) or less except when shown.
TOP CHORD 1-2=-641/379, 2-3=-645/391
WEBS 1-6=-377/673

NOTES- (7-8)
1) Wind: ASCE 7-16; Vult=175mph (3-second gust) Vasd=136mph; HVHZ; TCDL=5.0psf; BCDL=5.0psf; h=28ft; Cat. II; Exp C; Encl., GCpi=0.18; C-C Exterior(2E); Lumber DOL=1.60 plate grip DOL=1.60
2) Building Designer / Project engineer responsible for verifying applied roof live load shown covers rain loading requirements specific to the use of this truss component.
3) This truss has been designed for a 10.0 psf bottom chord live load nonconcurrent with any other live loads.
4) Refer to girder(s) for truss to truss connections.
5) Refer to girder(s) for truss to truss connections.
6) Provide mechanical connection (by others) of truss to bearing plate capable of withstanding 165 lb uplift at joint 4 and 839 lb uplift at joint 3.
7) All truss to truss connection by TCI are on the Truss Placement plan.
8) ARMANDO R. PEREZ PE. # 28026 Ph: (305) 882-8826

LOAD CASE(S) Standard

Job	Truss	Truss Type	Qty	Ply	12715 ROLLING ROAD DR, PINECREST, FL.
12715	J3AT	JACK-OPEN	12	1	Job Reference (optional)

Trusscorp Int., 9590 NW 89 AVE, Medley, FL

8.820 s Dec 4 2024 MiTek Industries, Inc. Thu Jun 5 12:43:44 2025 Page 1
ID:_GLN6EJBZ1GCD23RDL_tAxzKvJz-qO?haebkf7_FZgI3MNzZyFQA7NGNHs0aSAzxydz9LMz

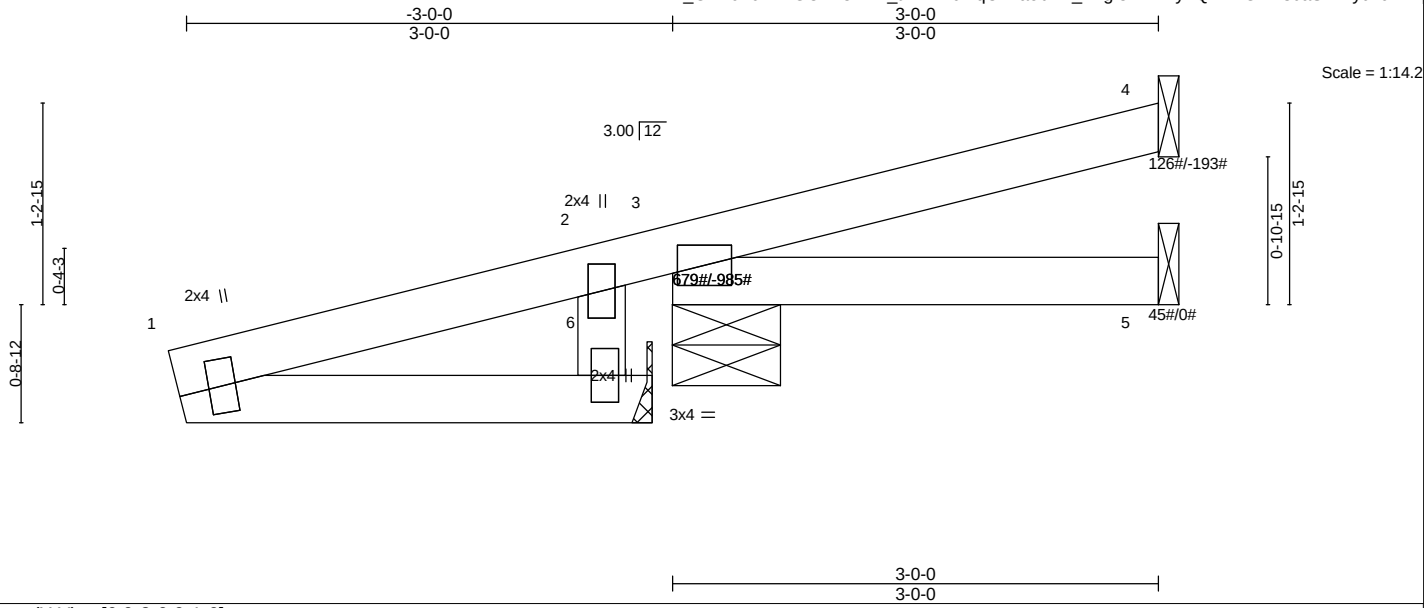

Plate Offsets (X,Y)-- [6:0-2-0,0-1-0]

LOADING (psf)		**SPACING-**	2-0-0	**CSI.**		**DEFL.**	in	(loc)	l/defl	L/d	**PLATES**	**GRIP**
TCLL	30.0	Plate Grip DOL	1.33	TC	0.40	Vert(LL)	-0.00	5-9	>999	360	MT20	244/190
TCDL	15.0	Lumber DOL	1.33	BC	0.09	Vert(CT)	-0.00	5-9	>999	180		
BCLL	0.0	Rep Stress Incr	YES	WB	0.23	Horz(CT)	0.00	3	n/a	n/a		
BCDL	10.0	Code FBC2020/TPI2014		Matrix-MP							Weight: 19 lb	FT = 0%

LUMBER-
TOP CHORD 2x4 SP No.2
BOT CHORD 2x4 SP No.2
OTHERS 2x4 SP No.3

BRACING-
TOP CHORD Structural wood sheathing directly applied or 3-0-0 oc purlins.
BOT CHORD Rigid ceiling directly applied or 10-0-0 oc bracing.

MiTek recommends that Stabilizers and required cross bracing be installed during truss erection, in accordance with Stabilizer Installation guide.

REACTIONS. (lb/size) 4=84/Mechanical, 3=500/0-8-0 (min. 0-1-8), 5=16/Mechanical, 6=-0/Mechanical
Max Horz 3=-473(LC 4), 6=785(LC 4)
Max Uplift4=-193(LC 4), 3=-985(LC 4)
Max Grav 4=126(LC 5), 3=679(LC 5), 5=45(LC 3)

FORCES. (lb) - Max. Comp./Max. Ten. - All forces 250 (lb) or less except when shown.
TOP CHORD 1-2=-749/487, 2-3=-755/498
WEBS 1-6=-491/786

NOTES- (7-8)
1) Wind: ASCE 7-16; Vult=175mph (3-second gust) Vasd=136mph; HVHZ; TCDL=5.0psf; BCDL=5.0psf; h=28ft; Cat. II; Exp C; Part. Encl., GCpi=0.55; C-C Exterior(2E); Lumber DOL=1.60 plate grip DOL=1.60
2) Building Designer / Project engineer responsible for verifying applied roof live load shown covers rain loading requirements specific to the use of this truss component.
3) This truss has been designed for a 10.0 psf bottom chord live load nonconcurrent with any other live loads.
4) Refer to girder(s) for truss to truss connections.
5) Refer to girder(s) for truss to truss connections.
6) Provide mechanical connection (by others) of truss to bearing plate capable of withstanding 193 lb uplift at joint 4 and 985 lb uplift at joint 3.
7) All truss to truss connection by TCI are on the Truss Placement plan.
8) ARMANDO R. PEREZ PE. # 28026 Ph: (305) 882-8826

LOAD CASE(S) Standard

Job	Truss	Truss Type	Qty	Ply	12715 ROLLING ROAD DR, PINECREST, FL.
12715	J3B	JACK-OPEN	2	1	Job Reference (optional)

Trusscorp Int., 9590 NW 89 AVE, Medley, FL

8.820 s Dec 4 2024 MiTek Industries, Inc. Thu Jun 5 12:43:46 2025 Page 1
ID:_GLN6EJBZ1GCD23RDL_tAxzKvJz-mn7R_Jc_AkEzp_SSUo011gVS5ByVlp8twUS21Wz9LMx

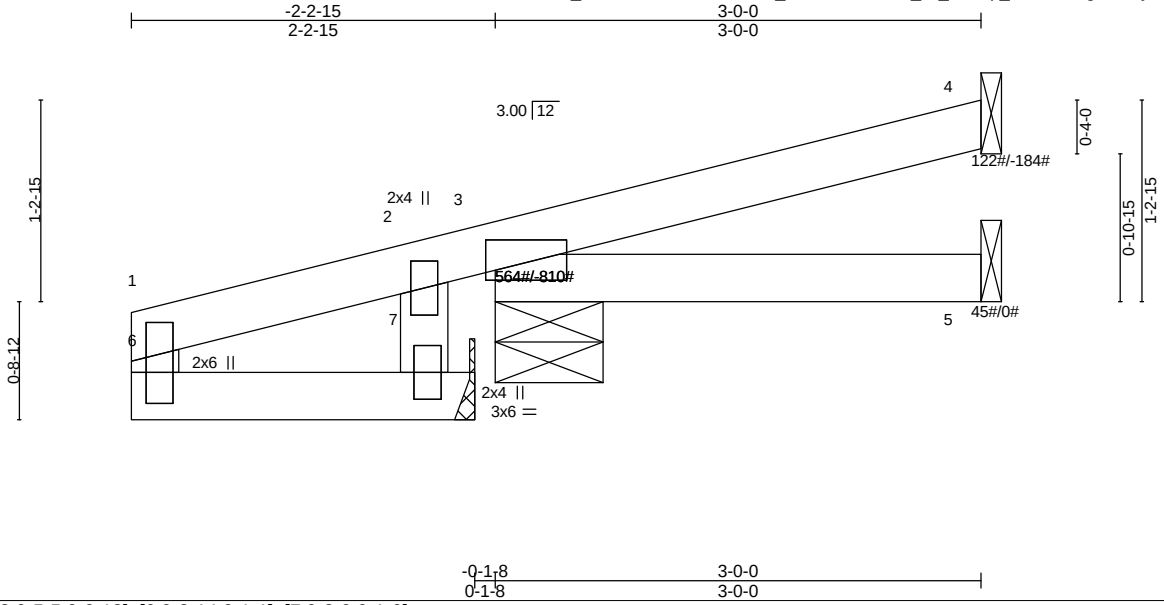

Plate Offsets (X,Y)-- [3:0-5-5,0-0-12], [6:0-2-14,0-1-1], [7:0-2-0,0-1-0]

LOADING (psf)		**SPACING-**	2-0-0	**CSI.**		**DEFL.**	in	(loc)	l/defl	L/d	**PLATES**	**GRIP**
TCLL	30.0	Plate Grip DOL	1.33	TC	0.69	Vert(LL)	-0.00	5-10	>999	360	MT20	244/190
TCDL	15.0	Lumber DOL	1.33	BC	0.11	Vert(CT)	-0.01	5-10	>999	180		
BCLL	0.0	Rep Stress Incr	YES	WB	0.00	Horz(CT)	0.00	3	n/a	n/a		
BCDL	10.0	Code FBC2020/TPI2014		Matrix-MP							Weight: 17 lb	FT = 0%

LUMBER-
TOP CHORD 2x4 SP No.2
BOT CHORD 2x4 SP No.2
WEBS 2x4 SP No.3
OTHERS 2x4 SP No.3

BRACING-
TOP CHORD Structural wood sheathing directly applied or 3-0-0 oc purlins.
BOT CHORD Rigid ceiling directly applied or 10-0-0 oc bracing.

MiTek recommends that Stabilizers and required cross bracing be installed during truss erection, in accordance with Stabilizer Installation guide.

REACTIONS. (lb/size) 4=81/Mechanical, 3=418/0-8-0 (min. 0-1-8), 5=13/Mechanical, 7=0/Mechanical
Max Horz 3=261(LC 4)
Max Uplift4=-184(LC 4), 3=-810(LC 4)
Max Grav 4=122(LC 5), 3=564(LC 5), 5=45(LC 3)

FORCES. (lb) - Max. Comp./Max. Ten. - All forces 250 (lb) or less except when shown.

NOTES- (7-8)
1) Wind: ASCE 7-16; Vult=175mph (3-second gust) Vasd=136mph; HVHZ; TCDL=5.0psf; BCDL=5.0psf; h=28ft; Cat. II; Exp C; Part. Encl., GCpi=0.55; C-C Exterior(2E); Lumber DOL=1.60 plate grip DOL=1.60
2) Building Designer / Project engineer responsible for verifying applied roof live load shown covers rain loading requirements specific to the use of this truss component.
3) This truss has been designed for a 10.0 psf bottom chord live load nonconcurrent with any other live loads.
4) Refer to girder(s) for truss to truss connections.
5) Refer to girder(s) for truss to truss connections.
6) Provide mechanical connection (by others) of truss to bearing plate capable of withstanding 184 lb uplift at joint 4 and 810 lb uplift at joint 3.
7) All truss to truss connection by TCI are on the Truss Placement plan.
8) ARMANDO R. PEREZ PE. # 28026 Ph: (305) 882-8826

LOAD CASE(S) Standard

Job	Truss	Truss Type	Qty	Ply	12715 ROLLING ROAD DR, PINECREST, FL.
12715	J3T	JACK-OPEN	9	1	Job Reference (optional)

Trusscorp Int., 9590 NW 89 AVE, Medley, FL

8.820 s Dec 4 2024 MiTek Industries, Inc. Thu Jun 5 12:43:48 2025 Page 1
ID:_GLN6EJBZ1GCD23RDL_tAxzKvJz-i9FBP?eEiMUh2IcqbD2V65att_ekDh09Nox95Oz9LMv

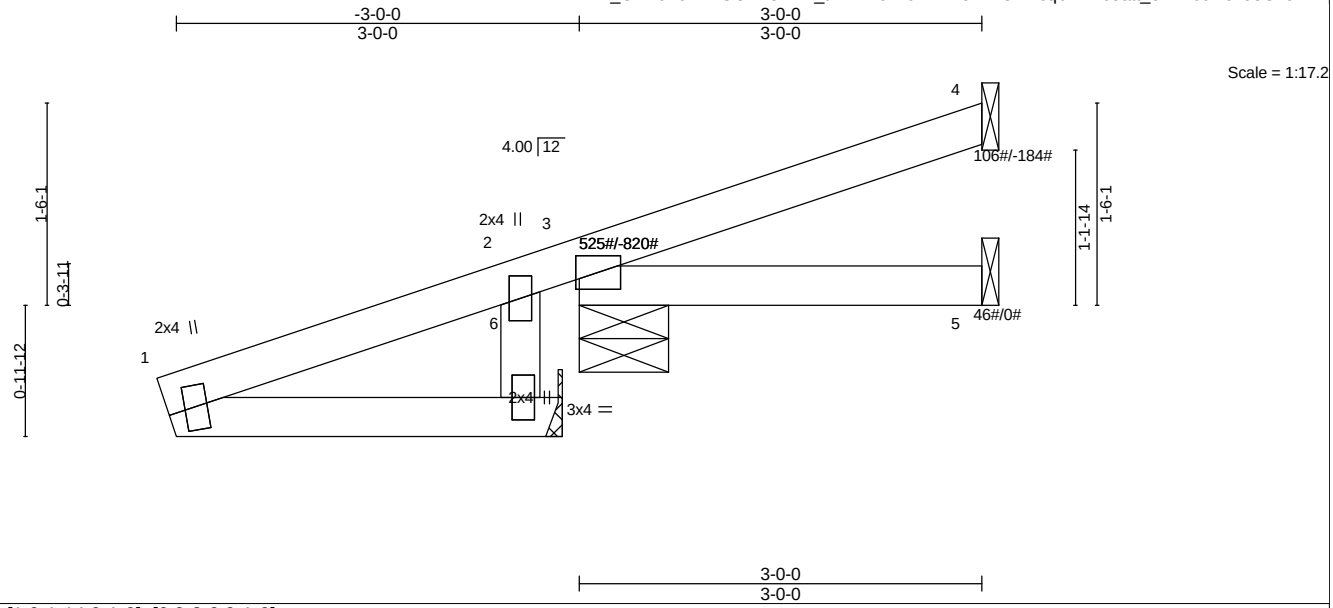

Plate Offsets (X,Y)-- [1:0-1-14,0-1-0], [6:0-2-0,0-1-0]

LOADING (psf)		**SPACING-**	2-0-0	**CSI.**		**DEFL.**	in	(loc)	l/defl	L/d	**PLATES**	**GRIP**
TCLL	30.0	Plate Grip DOL	1.33	TC	0.35	Vert(LL)	-0.00	5-9	>999	360	MT20	244/190
TCDL	15.0	Lumber DOL	1.33	BC	0.06	Vert(CT)	-0.00	5-9	>999	180		
BCLL	0.0	Rep Stress Incr	YES	WB	0.17	Horz(CT)	0.00	3	n/a	n/a		
BCDL	10.0	Code FBC2020/TPI2014		Matrix-MP							Weight: 20 lb	FT = 0%

LUMBER-
TOP CHORD 2x4 SP No.2
BOT CHORD 2x4 SP No.2
OTHERS 2x4 SP No.3

BRACING-
TOP CHORD Structural wood sheathing directly applied or 3-0-0 oc purlins.
BOT CHORD Rigid ceiling directly applied or 10-0-0 oc bracing.

MiTek recommends that Stabilizers and required cross bracing be installed during truss erection, in accordance with Stabilizer Installation guide.

REACTIONS. (lb/size) 4=88/Mechanical, 3=497/0-8-0 (min. 0-1-8), 5=17/Mechanical, 6=-0/Mechanical
Max Horz 3=270(LC 1), 6=565(LC 4)
Max Uplift4=-184(LC 4), 3=-820(LC 4)
Max Grav 4=106(LC 5), 3=525(LC 5), 5=46(LC 3)

FORCES. (lb) - Max. Comp./Max. Ten. - All forces 250 (lb) or less except when shown.
TOP CHORD 1-2=-525/327, 2-3=-528/345
WEBS 1-6=-314/566

NOTES- (7-8)
1) Wind: ASCE 7-16; Vult=175mph (3-second gust) Vasd=136mph; HVHZ; TCDL=5.0psf; BCDL=5.0psf; h=28ft; Cat. II; Exp C; Encl., GCpi=0.18; C-C Exterior(2E); Lumber DOL=1.60 plate grip DOL=1.60
2) Building Designer / Project engineer responsible for verifying applied roof live load shown covers rain loading requirements specific to the use of this truss component.
3) This truss has been designed for a 10.0 psf bottom chord live load nonconcurrent with any other live loads.
4) Refer to girder(s) for truss to truss connections.
5) Refer to girder(s) for truss to truss connections.
6) Provide mechanical connection (by others) of truss to bearing plate capable of withstanding 184 lb uplift at joint 4 and 820 lb uplift at joint 3.
7) All truss to truss connection by TCI are on the Truss Placement plan.
8) ARMANDO R. PEREZ PE. # 28026 Ph: (305) 882-8826

LOAD CASE(S) Standard

Job	Truss	Truss Type	Qty	Ply	12715 ROLLING ROAD DR, PINECREST, FL.
12715	J3TA	JACK-OPEN	1	1	Job Reference (optional)

Trusscorp Int., 9590 NW 89 AVE, Medley, FL

8.820 s Dec 4 2024 MiTek Industries, Inc. Thu Jun 5 12:43:49 2025 Page 1
ID:_GLN6EJBZ1GCD23RDL_tAxzKvJz-AMpadLfsTfcYgRB19xZkfJ70cOztyAuJcShidrz9LMu

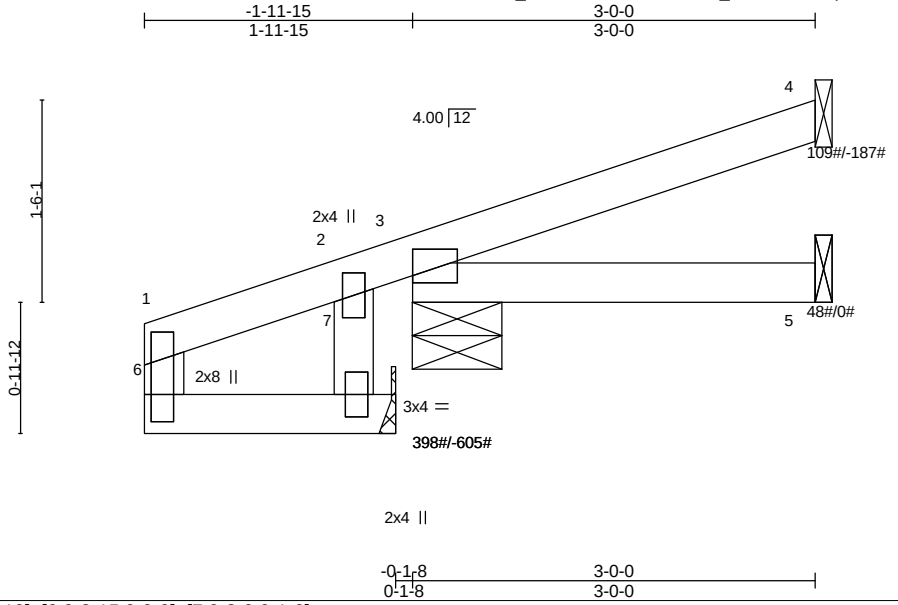

Plate Offsets (X,Y)-- [3:Edge,0-0-10], [6:0-2-15,0-0-9], [7:0-2-0,0-1-0]

LOADING (psf)		SPACING-	2-0-0	CSI.		DEFL.	in	(loc)	l/defl	L/d	PLATES	GRIP
TCLL	30.0	Plate Grip DOL	1.33	TC	0.48	Vert(LL)	-0.00	5-10	>999	360	MT20	244/190
TCDL	15.0	Lumber DOL	1.33	BC	0.06	Vert(CT)	-0.01	5-10	>999	180		
BCLL	0.0	Rep Stress Incr	YES	WB	0.00	Horz(CT)	0.00	4	n/a	n/a		
BCDL	10.0	Code FBC2020/TPI2014		Matrix-MP							Weight: 17 lb	FT = 0%

LUMBER-
TOP CHORD 2x4 SP No.2
BOT CHORD 2x4 SP No.2
WEBS 2x4 SP No.3
OTHERS 2x4 SP No.3

BRACING-
TOP CHORD Structural wood sheathing directly applied or 3-0-0 oc purlins.
BOT CHORD Rigid ceiling directly applied or 10-0-0 oc bracing.

MiTek recommends that Stabilizers and required cross bracing be installed during truss erection, in accordance with Stabilizer Installation guide.

REACTIONS. All bearings Mechanical except (jt=length) 3=0-8-0, 7=Mechanical.
(lb) - Max Horz 3=285(LC 4)
Max Uplift All uplift 100 lb or less at joint(s) except 4=-187(LC 4), 3=-605(LC 4)
Max Grav All reactions 250 lb or less at joint(s) 4, 5, 5 except 3=398(LC 5)

FORCES. (lb) - Max. Comp./Max. Ten. - All forces 250 (lb) or less except when shown.

NOTES- (7-8)
1) Wind: ASCE 7-16; Vult=175mph (3-second gust) Vasd=136mph; HVHZ; TCDL=5.0psf; BCDL=5.0psf; h=28ft; Cat. II; Exp C; Encl., GCpi=0.18; C-C Exterior(2E); Lumber DOL=1.60 plate grip DOL=1.60
2) Building Designer / Project engineer responsible for verifying applied roof live load shown covers rain loading requirements specific to the use of this truss component.
3) This truss has been designed for a 10.0 psf bottom chord live load nonconcurrent with any other live loads.
4) Refer to girder(s) for truss to truss connections.
5) Refer to girder(s) for truss to truss connections.
6) Provide mechanical connection (by others) of truss to bearing plate capable of withstanding 187 lb uplift at joint 4 and 605 lb uplift at joint 3.
7) All truss to truss connection by TCI are on the Truss Placement plan.
8) ARMANDO R. PEREZ PE. # 28026 Ph: (305) 882-8826

LOAD CASE(S) Standard

Job	Truss	Truss Type	Qty	Ply	12715 ROLLING ROAD DR, PINECREST, FL.
12715	J5	Jack-Open	9	1	Job Reference (optional)

Trusscorp Int., 9590 NW 89 AVE, Medley, FL

8.820 s Dec 4 2024 MiTek Industries, Inc. Thu Jun 5 12:43:51 2025 Page 1
ID:_GLN6EJBZ1GCD23RDL_tAxzKvJz-7kwK21g7?HsGvlLPHMbCkkCICCcTQ2Mc3mApijz9LMs

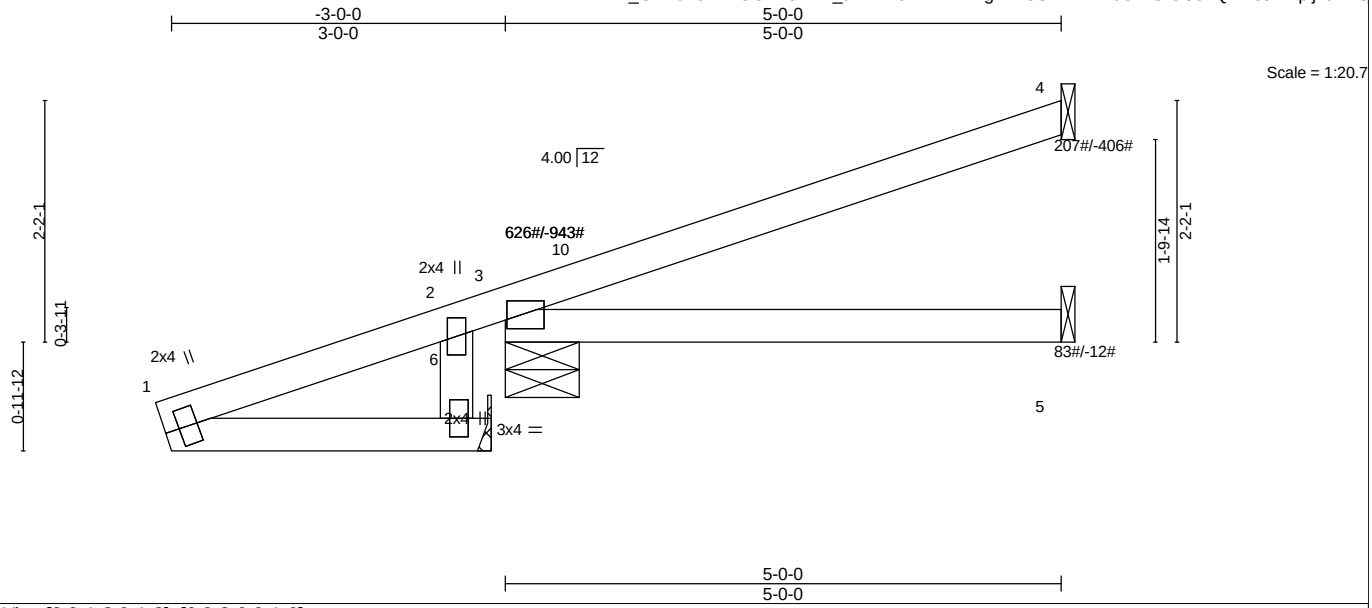

Plate Offsets (X,Y)-- [3:0-1-8,0-1-8], [6:0-2-0,0-1-0]

LOADING (psf)		**SPACING-**	2-0-0	**CSI.**		**DEFL.**	in	(loc)	l/defl	L/d	**PLATES**	**GRIP**
TCLL	30.0	Plate Grip DOL	1.33	TC	0.67	Vert(LL)	0.04	5-9	>999	360	MT20	244/190
TCDL	15.0	Lumber DOL	1.33	BC	0.31	Vert(CT)	-0.05	5-9	>999	180		
BCLL	0.0	Rep Stress Incr	YES	WB	0.13	Horz(CT)	-0.01	4	n/a	n/a		
BCDL	10.0	Code FBC2020/TPI2014		Matrix-AS							Weight: 26 lb	FT = 0%

LUMBER-
TOP CHORD 2x4 SP No.2
BOT CHORD 2x4 SP No.2
OTHERS 2x4 SP No.3

BRACING-
TOP CHORD Structural wood sheathing directly applied.
BOT CHORD Rigid ceiling directly applied.

MiTek recommends that Stabilizers and required cross bracing be installed during truss erection, in accordance with Stabilizer Installation guide.

REACTIONS. (lb/size) 4=175/Mechanical, 3=597/0-8-0 (min. 0-1-8), 5=50/Mechanical, 6=0/Mechanical
Max Horz 3=205(LC 1), 6=433(LC 4)
Max Uplift4=-406(LC 4), 3=-943(LC 4), 5=-12(LC 4)
Max Grav 4=207(LC 5), 3=626(LC 5), 5=83(LC 3)

FORCES. (lb) - Max. Comp./Max. Ten. - All forces 250 (lb) or less except when shown.
TOP CHORD 1-2=-402/266, 2-3=-402/282
WEBS 1-6=-233/434

NOTES- (8-9)
1) Wind: ASCE 7-16; Vult=175mph (3-second gust) Vasd=136mph; HVHZ; TCDL=5.0psf; BCDL=5.0psf; h=28ft; Cat. II; Exp C; Encl., GCpi=0.18; C-C Exterior(2E) -3-1-3 to 0-3-7, Interior(1) 0-3-7 to 0-8-5, Exterior(2R) 0-8-5 to 4-11-4; Lumber DOL=1.60 plate grip DOL=1.60
2) Building Designer / Project engineer responsible for verifying applied roof live load shown covers rain loading requirements specific to the use of this truss component.
3) This truss has been designed for a 10.0 psf bottom chord live load nonconcurrent with any other live loads.
4) Refer to girder(s) for truss to truss connections.
5) Refer to girder(s) for truss to truss connections.
6) Provide mechanical connection (by others) of truss to bearing plate capable of withstanding 406 lb uplift at joint 4, 943 lb uplift at joint 3 and 12 lb uplift at joint 5.
7) This truss design requires that a minimum of 7/16" structural wood sheathing be applied directly to the top chord and 1/2" gypsum sheetrock be applied directly to the bottom chord.
8) All truss to truss connection by TCI are on the Truss Placement plan.
9) ARMANDO R. PEREZ PE. # 28026 Ph: (305) 882-8826

LOAD CASE(S) Standard

Job	Truss	Truss Type	Qty	Ply	12715 ROLLING ROAD DR, PINECREST, FL.
12715	J5A	Jack-Open	25	1	Job Reference (optional)

Trusscorp Int., 9590 NW 89 AVE, Medley, FL

8.820 s Dec 4 2024 MiTek Industries, Inc. Thu Jun 5 12:43:54 2025 Page 1
ID:_GLN6EJBZ1GCD23RDL_tAxzKvJz-XJcSg2j?ICEqmD3_yU9vMMqqCPdNdPj2lkOTJ2z9LMp

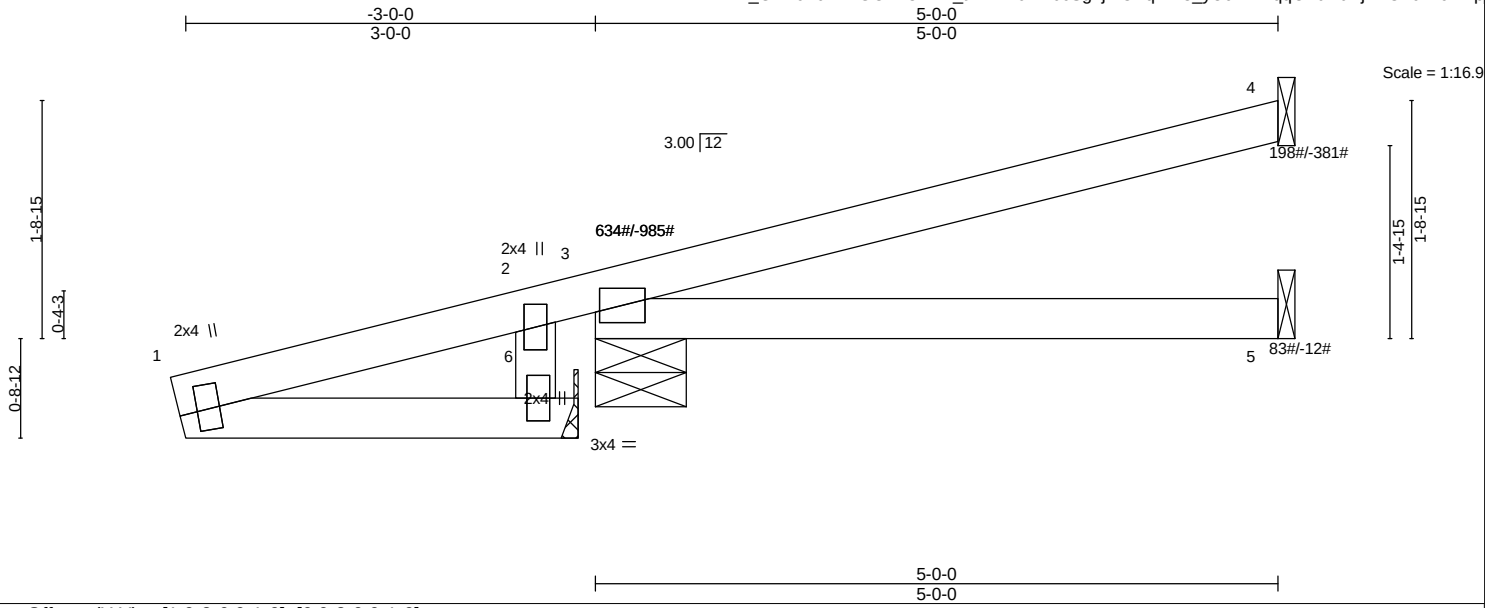

Plate Offsets (X,Y)-- [1:0-2-6,0-1-9], [6:0-2-0,0-1-0]

LOADING (psf)		**SPACING-** 2-0-0		**CSI.**		**DEFL.**	in	(loc)	l/defl	L/d	**PLATES**	**GRIP**
TCLL	30.0	Plate Grip DOL	1.33	TC	0.62	Vert(LL)	0.04	5-9	>999	360	MT20	244/190
TCDL	15.0	Lumber DOL	1.33	BC	0.30	Vert(CT)	-0.04	5-9	>999	180		
BCLL	0.0	Rep Stress Incr	YES	WB	0.15	Horz(CT)	-0.01	4	n/a	n/a		
BCDL	10.0	Code FBC2020/TPI2014		Matrix-AS							Weight: 25 lb	FT = 0%

LUMBER-
TOP CHORD 2x4 SP No.2
BOT CHORD 2x4 SP No.2
OTHERS 2x4 SP No.3

BRACING-
TOP CHORD Structural wood sheathing directly applied.
BOT CHORD Rigid ceiling directly applied.

MiTek recommends that Stabilizers and required cross bracing be installed during truss erection, in accordance with Stabilizer Installation guide.

REACTIONS. (lb/size) 4=173/Mechanical, 3=597/0-8-0 (min. 0-1-8), 5=50/Mechanical, 6=0/Mechanical
Max Horz 3=254(LC 1), 6=519(LC 4)
Max Uplift 4=-381(LC 4), 3=-985(LC 4), 5=-12(LC 4)
Max Grav 4=198(LC 5), 3=634(LC 5), 5=83(LC 3)

FORCES. (lb) - Max. Comp./Max. Ten. - All forces 250 (lb) or less except when shown.
TOP CHORD 1-2=-496/300, 2-3=-497/314
WEBS 1-6=-284/520

NOTES- (8-9)
1) Wind: ASCE 7-16; Vult=175mph (3-second gust) Vasd=136mph; HVHZ; TCDL=5.0psf; BCDL=5.0psf; h=28ft; Cat. II; Exp C; Encl., GCpi=0.18; C-C Exterior(2E) -3-0-15 to 0-0-0, Interior(1) 0-0-0 to 0-4-12, Exterior(2R) 0-4-12 to 4-11-4; Lumber DOL=1.60 plate grip DOL=1.60
2) Building Designer / Project engineer responsible for verifying applied roof live load shown covers rain loading requirements specific to the use of this truss component.
3) This truss has been designed for a 10.0 psf bottom chord live load nonconcurrent with any other live loads.
4) Refer to girder(s) for truss to truss connections.
5) Refer to girder(s) for truss to truss connections.
6) Provide mechanical connection (by others) of truss to bearing plate capable of withstanding 381 lb uplift at joint 4, 985 lb uplift at joint 3 and 12 lb uplift at joint 5.
7) This truss design requires that a minimum of 7/16" structural wood sheathing be applied directly to the top chord and 1/2" gypsum sheetrock be applied directly to the bottom chord.
8) All truss to truss connection by TCI are on the Truss Placement plan.
9) ARMANDO R. PEREZ PE. # 28026 Ph: (305) 882-8826

LOAD CASE(S) Standard

Job	Truss	Truss Type	Qty	Ply	12715 ROLLING ROAD DR, PINECREST, FL.
12715	J5AT	JACK-OPEN	22	1	Job Reference (optional)

Trusscorp Int., 9590 NW 89 AVE, Medley, FL

8.820 s Dec 4 2024 MiTek Industries, Inc. Thu Jun 5 12:43:56 2025 Page 1
ID:_GLN6EJBZ1GCD23RDL_tAxzKvJz-TikD5kkFqpVY?WDN3vBNRnw8BDIF5JoLD2taNxz9LMn

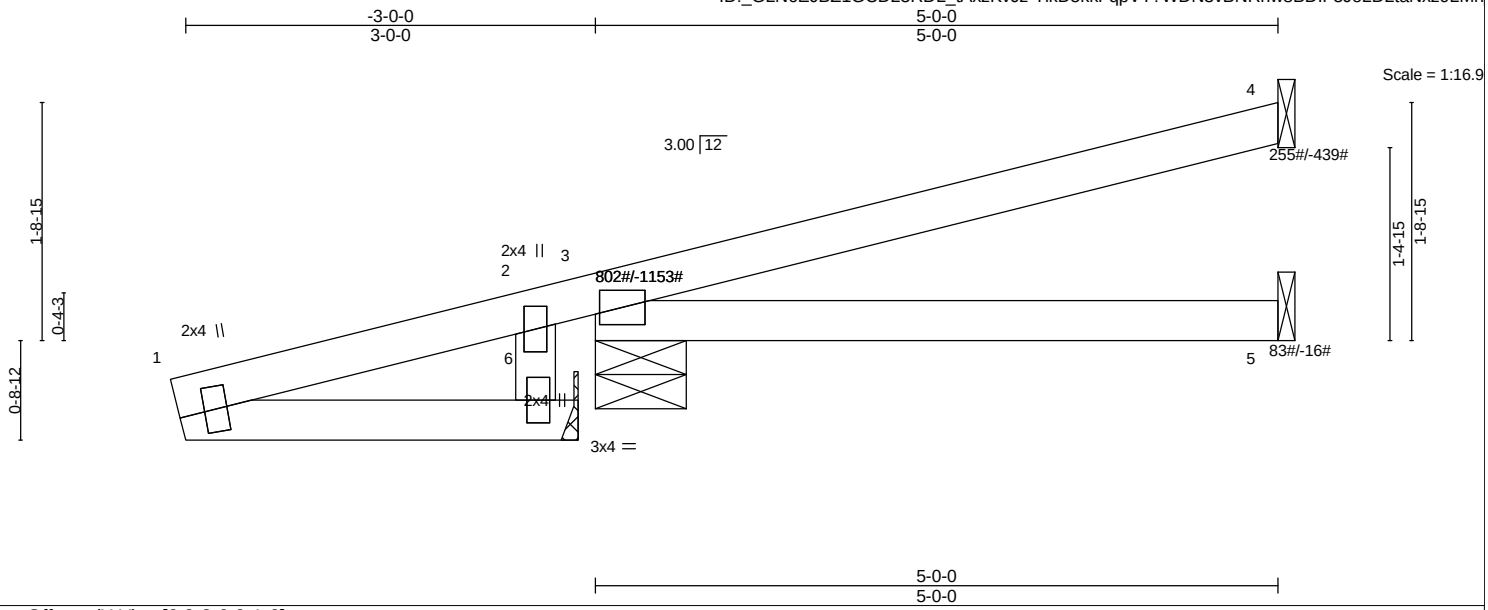

Plate Offsets (X,Y)-- [6:0-2-0,0-1-0]

LOADING (psf)		**SPACING-** 2-0-0		**CSI.**		**DEFL.**	in	(loc)	l/defl	L/d	**PLATES**	**GRIP**
TCLL	30.0	Plate Grip DOL	1.33	TC	0.71	Vert(LL)	0.05	5-9	>999	360	MT20	244/190
TCDL	15.0	Lumber DOL	1.33	BC	0.34	Vert(CT)	-0.04	5-9	>999	180		
BCLL	0.0	Rep Stress Incr	YES	WB	0.18	Horz(CT)	-0.01	4	n/a	n/a		
BCDL	10.0	Code FBC2020/TPI2014		Matrix-AS							Weight: 25 lb	FT = 0%

LUMBER-
TOP CHORD 2x4 SP No.2
BOT CHORD 2x4 SP No.2
OTHERS 2x4 SP No.3

BRACING-
TOP CHORD Structural wood sheathing directly applied.
BOT CHORD Rigid ceiling directly applied.

MiTek recommends that Stabilizers and required cross bracing be installed during truss erection, in accordance with Stabilizer Installation guide.

REACTIONS. (lb/size) 4=173/Mechanical, 3=597/0-8-0 (min. 0-1-8), 5=50/Mechanical, 6=0/Mechanical
Max Horz 3=254(LC 1), 6=610(LC 4)
Max Uplift4=-439(LC 4), 3=-1153(LC 4), 5=-16(LC 4)
Max Grav 4=255(LC 5), 3=802(LC 5), 5=83(LC 3)

FORCES. (lb) - Max. Comp./Max. Ten. - All forces 250 (lb) or less except when shown.
TOP CHORD 1-2=-582/377, 2-3=-585/385
WEBS 1-6=-375/611

NOTES- (8-9)
1) Wind: ASCE 7-16; Vult=175mph (3-second gust) Vasd=136mph; HVHZ; TCDL=5.0psf; BCDL=5.0psf; h=28ft; Cat. II; Exp C; Part. Encl., GCpi=0.55; C-C Exterior(2E) -3-0-15 to 0-0-0, Interior(1) 0-0-0 to 0-4-12, Exterior(2R) 0-4-12 to 4-11-4; Lumber DOL=1.60 plate grip DOL=1.60
2) Building Designer / Project engineer responsible for verifying applied roof live load shown covers rain loading requirements specific to the use of this truss component.
3) This truss has been designed for a 10.0 psf bottom chord live load nonconcurrent with any other live loads.
4) Refer to girder(s) for truss to truss connections.
5) Refer to girder(s) for truss to truss connections.
6) Provide mechanical connection (by others) of truss to bearing plate capable of withstanding 439 lb uplift at joint 4, 1153 lb uplift at joint 3 and 16 lb uplift at joint 5.
7) This truss design requires that a minimum of 7/16" structural wood sheathing be applied directly to the top chord and 1/2" gypsum sheetrock be applied directly to the bottom chord.
8) All truss to truss connection by TCI are on the Truss Placement plan.
9) ARMANDO R. PEREZ PE. # 28026 Ph: (305) 882-8826

LOAD CASE(S) Standard

Job	Truss	Truss Type	Qty	Ply	12715 ROLLING ROAD DR, PINECREST, FL.
12715	J5B	Jack-Open	2	1	Job Reference (optional)

Trusscorp Int., 9590 NW 89 AVE, Medley, FL

8.820 s Dec 4 2024 MiTek Industries, Inc. Thu Jun 5 12:43:58 2025 Page 1
ID:_GLN6EJBZ1GCD23RDL_tAxzKvJz-Q5szWQmWLQlGFqNlBKDrWC?Wz02gZD?egLMhSpz9LMl

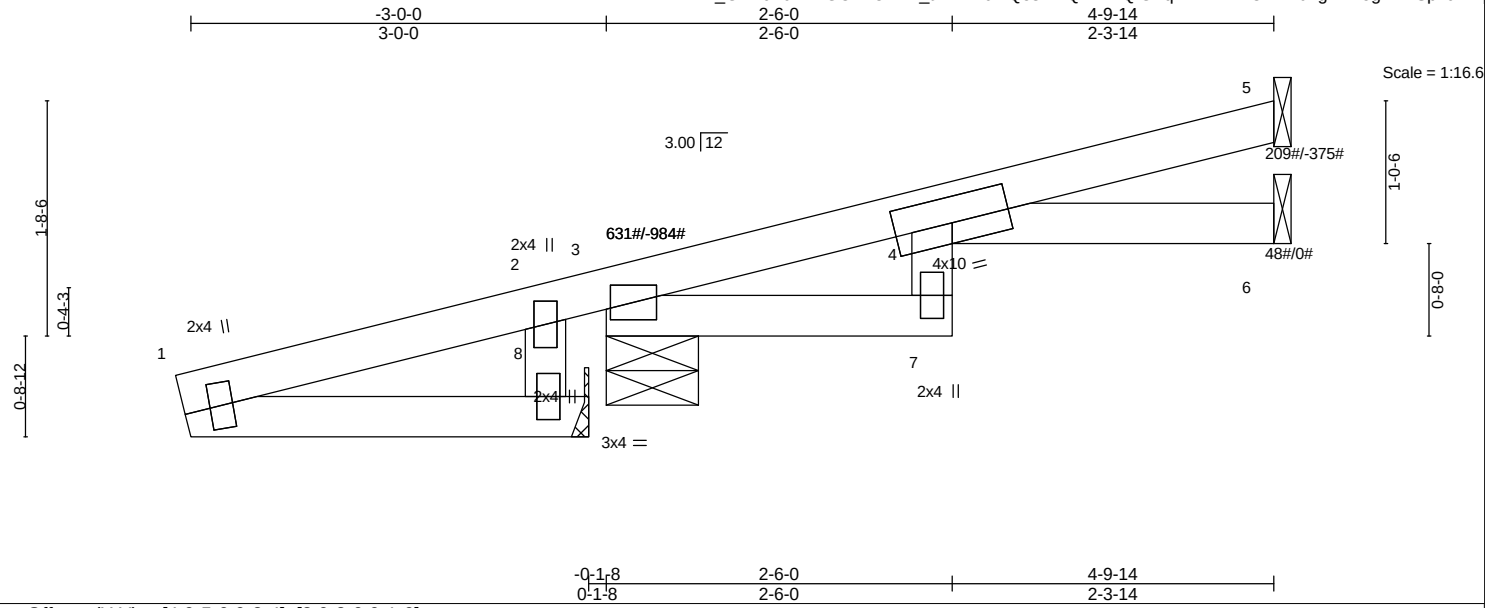

Plate Offsets (X,Y)-- [4:0-5-0,0-2-4], [8:0-2-0,0-1-0]

LOADING (psf)		**SPACING-**	2-0-0	**CSI.**		**DEFL.**	in	(loc)	l/defl	L/d	**PLATES**	**GRIP**
TCLL	30.0	Plate Grip DOL	1.33	TC	0.63	Vert(LL)	0.12	7	>488	360	MT20	244/190
TCDL	15.0	Lumber DOL	1.33	BC	0.08	Vert(CT)	0.10	4	>564	180		
BCLL	0.0	Rep Stress Incr	YES	WB	0.14	Horz(CT)	-0.04	6	n/a	n/a		
BCDL	10.0	Code FBC2020/TPI2014		Matrix-AS							Weight: 25 lb	FT = 0%

LUMBER-
TOP CHORD 2x4 SP No.2
BOT CHORD 2x4 SP No.2 *Except*
B2: 2x4 SP No.3
OTHERS 2x4 SP No.3

BRACING-
TOP CHORD Structural wood sheathing directly applied.
BOT CHORD Rigid ceiling directly applied.

MiTek recommends that Stabilizers and required cross bracing be installed during truss erection, in accordance with Stabilizer Installation guide.

REACTIONS. (lb/size) 5=183/Mechanical, 3=594/0-8-0 (min. 0-1-8), 6=24/Mechanical, 8=0/Mechanical
Max Horz 3=223(LC 1), 8=456(LC 4)
Max Uplift5=-375(LC 4), 3=-984(LC 4)
Max Grav 5=209(LC 5), 3=631(LC 5), 6=48(LC 3)

FORCES. (lb) - Max. Comp./Max. Ten. - All forces 250 (lb) or less except when shown.
TOP CHORD 1-2=-435/271, 2-3=-436/284
WEBS 1-8=-248/457

NOTES- (8-9)
1) Wind: ASCE 7-16; Vult=175mph (3-second gust) Vasd=136mph; HVHZ; TCDL=5.0psf; BCDL=5.0psf; h=28ft; Cat. II; Exp C; Encl., GCpi=0.18; C-C Exterior(2E) -3-0-15 to 0-0-0, Interior(1) 0-0-0 to 0-4-12, Exterior(2R) 0-4-12 to 4-9-2; Lumber DOL=1.60 plate grip DOL=1.60
2) Building Designer / Project engineer responsible for verifying applied roof live load shown covers rain loading requirements specific to the use of this truss component.
3) This truss has been designed for a 10.0 psf bottom chord live load nonconcurrent with any other live loads.
4) Refer to girder(s) for truss to truss connections.
5) Refer to girder(s) for truss to truss connections.
6) Provide mechanical connection (by others) of truss to bearing plate capable of withstanding 375 lb uplift at joint 5 and 984 lb uplift at joint 3.
7) This truss design requires that a minimum of 7/16" structural wood sheathing be applied directly to the top chord and 1/2" gypsum sheetrock be applied directly to the bottom chord.
8) All truss to truss connection by TCI are on the Truss Placement plan.
9) ARMANDO R. PEREZ PE. # 28026 Ph: (305) 882-8826

LOAD CASE(S) Standard

Job	Truss	Truss Type	Qty	Ply	12715 ROLLING ROAD DR, PINECREST, FL.
12715	J5C	JACK-OPEN	7	1	Job Reference (optional)

Trusscorp Int., 9590 NW 89 AVE, Medley, FL

8.820 s Dec 4 2024 MiTek Industries, Inc. Thu Jun 5 12:44:00 2025 Page 1
ID:_GLN6EJBZ1GCD23RDL_tAxzKvJz-MTzkx6nmt2?_U8X8lIGJbd4oTqav18cw8frnWiz9LMj

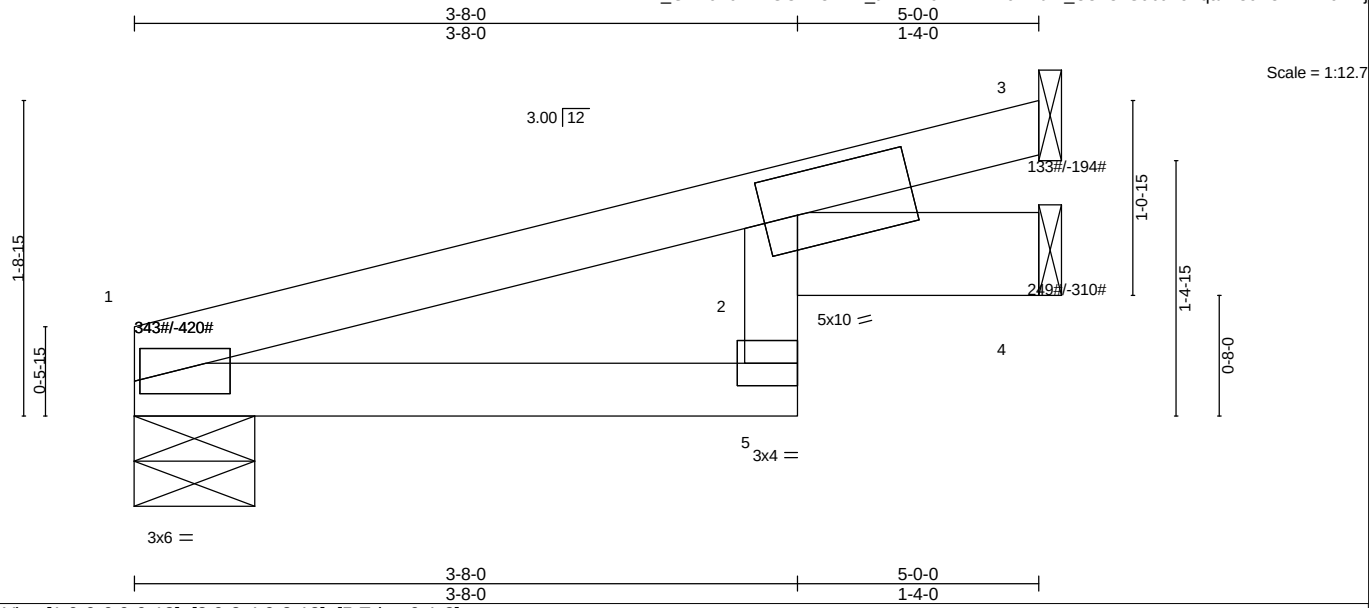

Plate Offsets (X,Y)-- [1:0-0-6,0-0-13], [2:0-2-4,0-2-12], [5:Edge,0-1-8]

LOADING (psf)		**SPACING-**	2-0-0	**CSI.**		**DEFL.**	in	(loc)	l/defl	L/d	**PLATES**	**GRIP**
TCLL	30.0	Plate Grip DOL	1.33	TC	0.89	Vert(LL)	0.13	5	>442	360	MT20	244/190
TCDL	15.0	Lumber DOL	1.33	BC	0.67	Vert(CT)	0.12	5	>499	180		
BCLL	0.0	Rep Stress Incr	YES	WB	0.00	Horz(CT)	-0.08	4	n/a	n/a		
BCDL	10.0	Code FBC2020/TPI2014		Matrix-AS							Weight: 18 lb	FT = 0%

LUMBER-
TOP CHORD 2x4 SP No.2
BOT CHORD 2x4 SP No.2 *Except*
B2: 2x4 SP No.3, B3: 2x6 SP No.2

BRACING-
TOP CHORD Structural wood sheathing directly applied.
BOT CHORD Rigid ceiling directly applied.

MiTek recommends that Stabilizers and required cross bracing be installed during truss erection, in accordance with Stabilizer Installation guide.

REACTIONS. (lb/size) 1=272/0-8-0 (min. 0-1-8), 3=92/Mechanical, 4=179/Mechanical
Max Horz 1=256(LC 4)
Max Uplift1=-420(LC 4), 3=-194(LC 4), 4=-310(LC 4)
Max Grav 1=343(LC 5), 3=133(LC 5), 4=249(LC 5)

FORCES. (lb) - Max. Comp./Max. Ten. - All forces 250 (lb) or less except when shown.

NOTES- (7-8)
1) Wind: ASCE 7-16; Vult=175mph (3-second gust) Vasd=136mph; HVHZ; TCDL=5.0psf; BCDL=5.0psf; h=28ft; Cat. II; Exp C; Part. Encl., GCpi=0.55; C-C Exterior(2E); Lumber DOL=1.60 plate grip DOL=1.60
2) Building Designer / Project engineer responsible for verifying applied roof live load shown covers rain loading requirements specific to the use of this truss component.
3) This truss has been designed for a 10.0 psf bottom chord live load nonconcurrent with any other live loads.
4) Refer to girder(s) for truss to truss connections.
5) Provide mechanical connection (by others) of truss to bearing plate capable of withstanding 420 lb uplift at joint 1, 194 lb uplift at joint 3 and 310 lb uplift at joint 4.
6) This truss design requires that a minimum of 7/16" structural wood sheathing be applied directly to the top chord and 1/2" gypsum sheetrock be applied directly to the bottom chord.
7) All truss to truss connection by TCI are on the Truss Placement plan.
8) ARMANDO R. PEREZ PE. # 28026 Ph: (305) 882-8826

LOAD CASE(S) Standard

Job	Truss	Truss Type	Qty	Ply	12715 ROLLING ROAD DR, PINECREST, FL.
12715	J5E	Jack-Open	2	1	Job Reference (optional)

Trusscorp Int., 9590 NW 89 AVE, Medley, FL

8.820 s Dec 4 2024 MiTek Industries, Inc. Thu Jun 5 12:44:01 2025 Page 1
ID:_GLN6EJBZ1GCD23RDL_tAxzKvJz-qfX68SoOeL7r6I6KsSnY8rd02E3CmZn4MJbL28z9LMi

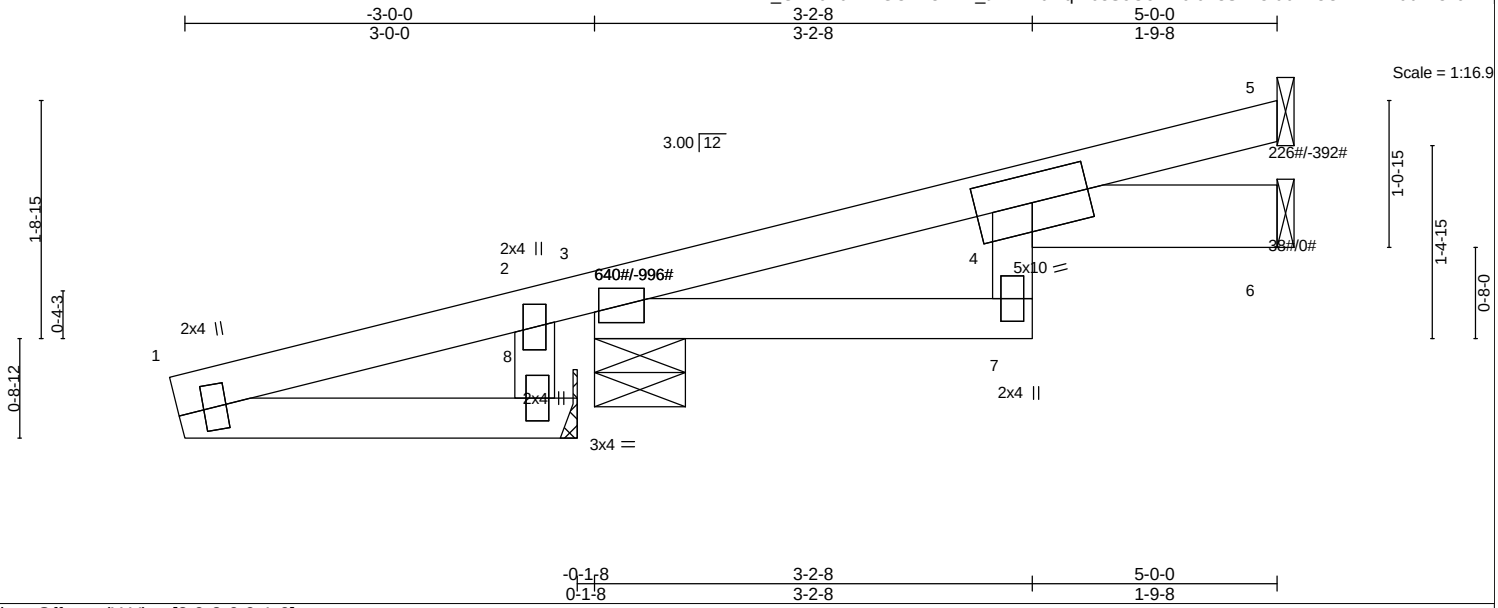

Plate Offsets (X,Y)-- [8:0-2-0,0-1-0]

LOADING (psf)		**SPACING-**	2-0-0	**CSI.**		**DEFL.**	in	(loc)	l/defl	L/d	**PLATES**	**GRIP**
TCLL	30.0	Plate Grip DOL	1.33	TC	0.64	Vert(LL)	0.13	7	>440	360	MT20	244/190
TCDL	15.0	Lumber DOL	1.33	BC	0.09	Vert(CT)	0.12	7	>508	180		
BCLL	0.0	Rep Stress Incr	YES	WB	0.13	Horz(CT)	-0.06	6	n/a	n/a		
BCDL	10.0	Code FBC2020/TPI2014		Matrix-AS							Weight: 28 lb	FT = 0%

LUMBER-
TOP CHORD 2x4 SP No.2
BOT CHORD 2x4 SP No.2 *Except*
B2: 2x4 SP No.3, B3: 2x6 SP No.2
OTHERS 2x4 SP No.3

BRACING-
TOP CHORD Structural wood sheathing directly applied.
BOT CHORD Rigid ceiling directly applied.

MiTek recommends that Stabilizers and required cross bracing be installed during truss erection, in accordance with Stabilizer Installation guide.

REACTIONS. (lb/size) 5=199/Mechanical, 3=602/0-8-0 (min. 0-1-8), 6=19/Mechanical, 8=-0/Mechanical
Max Horz 3=218(LC 1), 8=448(LC 4)
Max Uplift5=-392(LC 4), 3=-996(LC 4)
Max Grav 5=226(LC 5), 3=640(LC 5), 6=38(LC 3)

FORCES. (lb) - Max. Comp./Max. Ten. - All forces 250 (lb) or less except when shown.
TOP CHORD 1-2=-428/266, 2-3=-429/278
WEBS 1-8=-242/449

NOTES- (8-9)
1) Wind: ASCE 7-16; Vult=175mph (3-second gust) Vasd=136mph; HVHZ; TCDL=5.0psf; BCDL=5.0psf; h=28ft; Cat. II; Exp C; Encl., GCpi=0.18; C-C Exterior(2E) -3-0-15 to 0-0-0, Interior(1) 0-0-0 to 0-4-12, Exterior(2R) 0-4-12 to 4-11-4; Lumber DOL=1.60 plate grip DOL=1.60
2) Building Designer / Project engineer responsible for verifying applied roof live load shown covers rain loading requirements specific to the use of this truss component.
3) This truss has been designed for a 10.0 psf bottom chord live load nonconcurrent with any other live loads.
4) Refer to girder(s) for truss to truss connections.
5) Refer to girder(s) for truss to truss connections.
6) Provide mechanical connection (by others) of truss to bearing plate capable of withstanding 392 lb uplift at joint 5 and 996 lb uplift at joint 3.
7) This truss design requires that a minimum of 7/16" structural wood sheathing be applied directly to the top chord and 1/2" gypsum sheetrock be applied directly to the bottom chord.
8) All truss to truss connection by TCI are on the Truss Placement plan.
9) ARMANDO R. PEREZ PE. # 28026 Ph: (305) 882-8826

LOAD CASE(S) Standard

Job	Truss	Truss Type	Qty	Ply	12715 ROLLING ROAD DR, PINECREST, FL.
12715	J5T	JACK-OPEN	13	1	Job Reference (optional)

Trusscorp Int., 9590 NW 89 AVE, Medley, FL

8.820 s Dec 4 2024 MiTek Industries, Inc. Thu Jun 5 12:44:03 2025 Page 1
ID:_GLN6EJBZ1GCD23RDL_tAxzKvJz-m2fsZ7qeAzNZLbFj_tp0DGiKU1hdET?Nqd4S71z9LMg

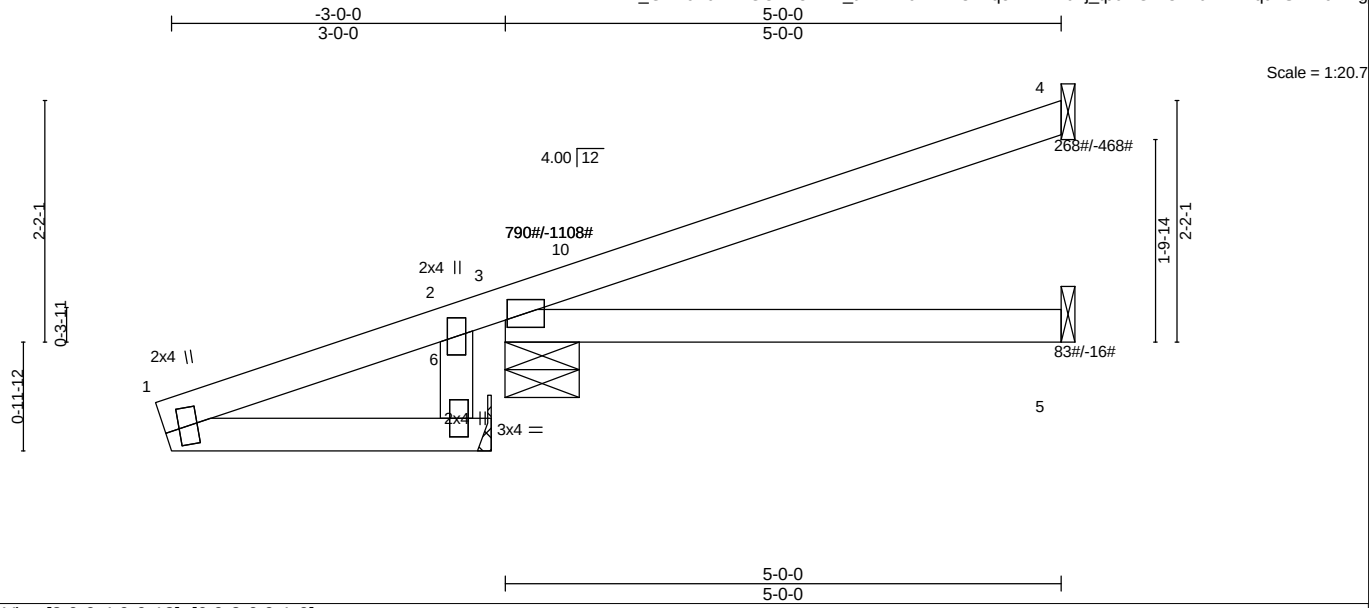

Plate Offsets (X,Y)-- [3:0-0-4,0-0-12], [6:0-2-0,0-1-0]

LOADING (psf)		**SPACING-**	2-0-0	**CSI.**		**DEFL.**	in	(loc)	l/defl	L/d	**PLATES**	**GRIP**
TCLL	30.0	Plate Grip DOL	1.33	TC	0.77	Vert(LL)	0.05	5-9	>999	360	MT20	244/190
TCDL	15.0	Lumber DOL	1.33	BC	0.35	Vert(CT)	-0.05	5-9	>999	180		
BCLL	0.0	Rep Stress Incr	YES	WB	0.15	Horz(CT)	-0.01	4	n/a	n/a		
BCDL	10.0	Code FBC2020/TPI2014		Matrix-AS							Weight: 26 lb	FT = 0%

LUMBER-
TOP CHORD 2x4 SP No.2
BOT CHORD 2x4 SP No.2
OTHERS 2x4 SP No.3

BRACING-
TOP CHORD Structural wood sheathing directly applied.
BOT CHORD Rigid ceiling directly applied.

MiTek recommends that Stabilizers and required cross bracing be installed during truss erection, in accordance with Stabilizer Installation guide.

REACTIONS. (lb/size) 4=175/Mechanical, 3=597/0-8-0 (min. 0-1-8), 5=50/Mechanical, 6=0/Mechanical
Max Horz 3=205(LC 1), 6=508(LC 4)
Max Uplift4=-468(LC 4), 3=-1108(LC 4), 5=-16(LC 4)
Max Grav 4=268(LC 5), 3=790(LC 5), 5=83(LC 3)

FORCES. (lb) - Max. Comp./Max. Ten. - All forces 250 (lb) or less except when shown.
TOP CHORD 1-2=-472/312, 2-3=-474/322
WEBS 1-6=-309/509

NOTES- (8-9)
1) Wind: ASCE 7-16; Vult=175mph (3-second gust) Vasd=136mph; HVHZ; TCDL=5.0psf; BCDL=5.0psf; h=28ft; Cat. II; Exp C; Part. Encl., GCpi=0.55; C-C Exterior(2E) -3-1-3 to 0-3-7, Interior(1) 0-3-7 to 0-8-5, Exterior(2R) 0-8-5 to 4-11-4; Lumber DOL=1.60 plate grip DOL=1.60
2) Building Designer / Project engineer responsible for verifying applied roof live load shown covers rain loading requirements specific to the use of this truss component.
3) This truss has been designed for a 10.0 psf bottom chord live load nonconcurrent with any other live loads.
4) Refer to girder(s) for truss to truss connections.
5) Refer to girder(s) for truss to truss connections.
6) Provide mechanical connection (by others) of truss to bearing plate capable of withstanding 468 lb uplift at joint 4, 1108 lb uplift at joint 3 and 16 lb uplift at joint 5.
7) This truss design requires that a minimum of 7/16" structural wood sheathing be applied directly to the top chord and 1/2" gypsum sheetrock be applied directly to the bottom chord.
8) All truss to truss connection by TCI are on the Truss Placement plan.
9) ARMANDO R. PEREZ PE. # 28026 Ph: (305) 882-8826

LOAD CASE(S) Standard

Job	Truss	Truss Type	Qty	Ply	12715 ROLLING ROAD DR, PINECREST, FL.
12715	J7	JACK-OPEN	2	1	Job Reference (optional)

Trusscorp Int., 9590 NW 89 AVE, Medley, FL

8.820 s Dec 4 2024 MiTek Industries, Inc. Thu Jun 5 12:44:04 2025 Page 1
ID:_GLN6EJBZ1GCD23RDL_tAxzKvJz-EEDEmTqGxGVQzlqvXaKFlTFdOR1kzv1W2Hp?fTz9LMf

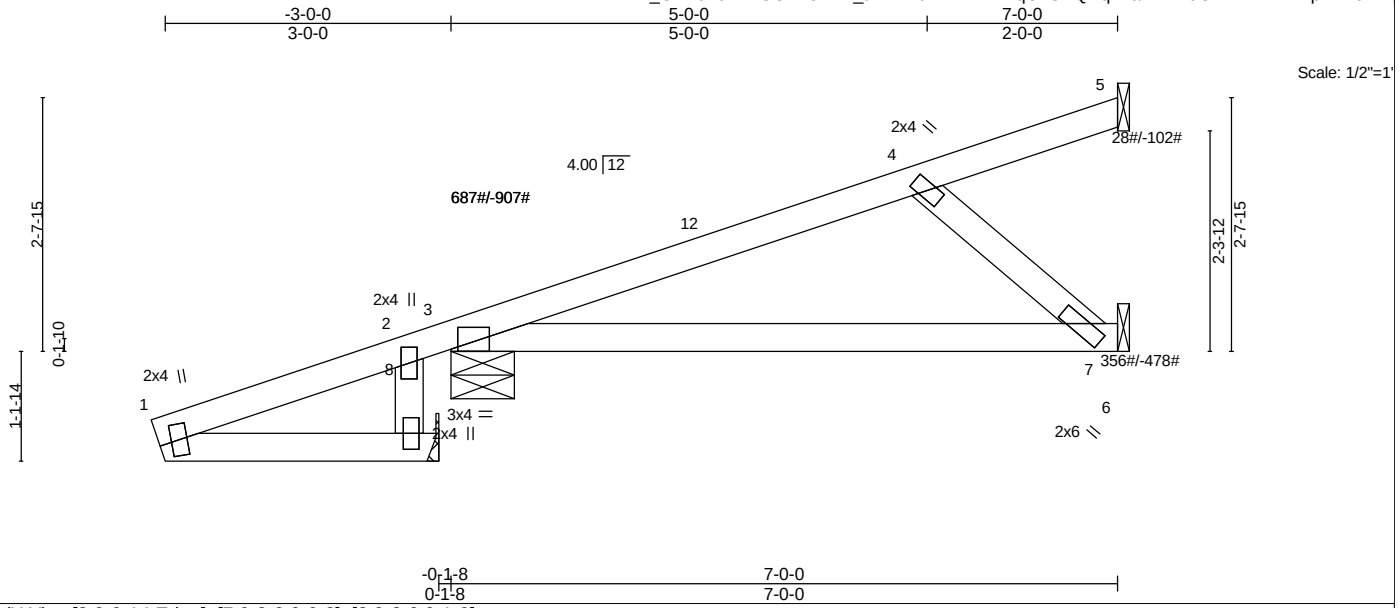

Plate Offsets (X,Y)-- [3:0-0-14,Edge], [7:0-3-0,0-0-8], [8:0-2-0,0-1-0]

LOADING (psf)		SPACING-	2-0-0	CSI.		DEFL.	in	(loc)	l/defl	L/d	PLATES	GRIP
TCLL	30.0	Plate Grip DOL	1.33	TC	0.32	Vert(LL)	-0.05	7-11	>999	360	MT20	244/190
TCDL	15.0	Lumber DOL	1.33	BC	0.36	Vert(CT)	-0.11	7-11	>742	180		
BCLL	0.0	Rep Stress Incr	YES	WB	0.23	Horz(CT)	-0.00	7	n/a	n/a		
BCDL	10.0	Code FBC2020/TPI2014		Matrix-AS							Weight: 35 lb	FT = 0%

LUMBER-
TOP CHORD 2x4 SP No.1
BOT CHORD 2x4 SP No.2
WEBS 2x4 SP No.3
OTHERS 2x4 SP No.3

BRACING-
TOP CHORD Structural wood sheathing directly applied.
BOT CHORD Rigid ceiling directly applied.

MiTek recommends that Stabilizers and required cross bracing be installed during truss erection, in accordance with Stabilizer Installation guide.

REACTIONS. (lb/size) 5=26/Mechanical, 3=687/0-8-0 (min. 0-1-8), 8=0/Mechanical, 7=331/Mechanical
Max Horz 3=181(LC 1), 8=466(LC 4)
Max Uplift5=-102(LC 4), 3=-907(LC 4), 7=-478(LC 4)
Max Grav 5=28(LC 5), 3=687(LC 1), 7=356(LC 5)

FORCES. (lb) - Max. Comp./Max. Ten. - All forces 250 (lb) or less except when shown.
TOP CHORD 1-2=-433/244, 2-3=-434/260, 3-12=-373/353, 4-12=-331/360
BOT CHORD 3-7=-586/349
WEBS 1-8=-201/467, 4-7=-458/768

NOTES- (8-9)
1) Wind: ASCE 7-16; Vult=175mph (3-second gust) Vasd=136mph; HVHZ; TCDL=5.0psf; BCDL=5.0psf; h=28ft; Cat. II; Exp C; Encl., GCpi=0.18; C-C Exterior(2E) -3-1-3 to 0-0-0, Interior(1) 0-0-0 to 2-8-5, Exterior(2R) 2-8-5 to 6-11-4; Lumber DOL=1.60 plate grip DOL=1.60
2) Building Designer / Project engineer responsible for verifying applied roof live load shown covers rain loading requirements specific to the use of this truss component.
3) This truss has been designed for a 10.0 psf bottom chord live load nonconcurrent with any other live loads.
4) Refer to girder(s) for truss to truss connections.
5) Refer to girder(s) for truss to truss connections.
6) Provide mechanical connection (by others) of truss to bearing plate capable of withstanding 102 lb uplift at joint 5, 907 lb uplift at joint 3 and 478 lb uplift at joint 7.
7) This truss design requires that a minimum of 7/16" structural wood sheathing be applied directly to the top chord and 1/2" gypsum sheetrock be applied directly to the bottom chord.
8) All truss to truss connection by TCI are on the Truss Placement plan.
9) ARMANDO R. PEREZ PE. # 28026 Ph: (305) 882-8826

LOAD CASE(S) Standard

Job	Truss	Truss Type	Qty	Ply	12715 ROLLING ROAD DR, PINECREST, FL.
12715	J7D	Jack-Open	1	1	Job Reference (optional)

Trusscorp Int., 9590 NW 89 AVE, Medley, FL

8.820 s Dec 4 2024 MiTek Industries, Inc. Thu Jun 5 12:44:05 2025 Page 1
ID:_GLN6EJBZ1GCD23RDL_tAxzKvJz-iRnd_prviadHbvP65IrUIhnlyrMyiMHgHxZYCvz9LMe

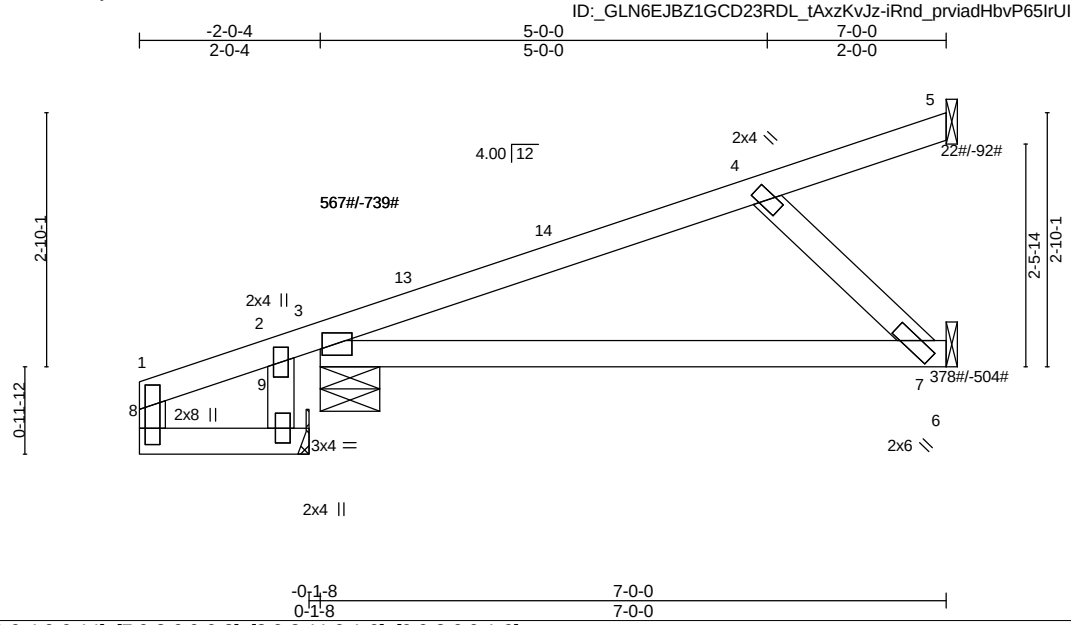

Plate Offsets (X,Y)-- [3:0-0-4,0-0-14], [7:0-3-0,0-0-8], [8:0-2-11,0-1-0], [9:0-2-0,0-1-0]

LOADING (psf)		**SPACING-**	2-0-0	**CSI.**		**DEFL.**	in	(loc)	l/defl	L/d	**PLATES**	**GRIP**
TCLL	30.0	Plate Grip DOL	1.33	TC	0.46	Vert(LL)	-0.07	7-12	>999	360	MT20	244/190
TCDL	15.0	Lumber DOL	1.33	BC	0.43	Vert(CT)	-0.14	7-12	>566	180		
BCLL	0.0	Rep Stress Incr	YES	WB	0.23	Horz(CT)	0.01	3	n/a	n/a		
BCDL	10.0	Code FBC2020/TPI2014		Matrix-AS							Weight: 33 lb	FT = 0%

LUMBER-
TOP CHORD 2x4 SP No.2
BOT CHORD 2x4 SP No.2
WEBS 2x4 SP No.3
OTHERS 2x4 SP No.3

BRACING-
TOP CHORD Structural wood sheathing directly applied.
BOT CHORD Rigid ceiling directly applied.

MiTek recommends that Stabilizers and required cross bracing be installed during truss erection, in accordance with Stabilizer Installation guide.

REACTIONS. (lb/size) 5=22/Mechanical, 3=567/0-8-0 (min. 0-1-8), 9=0/Mechanical, 7=344/Mechanical
Max Horz 3=498(LC 4)
Max Uplift5=-92(LC 4), 3=-739(LC 4), 7=-504(LC 4)
Max Grav 5=22(LC 1), 3=567(LC 1), 7=378(LC 5)

FORCES. (lb) - Max. Comp./Max. Ten. - All forces 250 (lb) or less except when shown.
TOP CHORD 3-13=-377/314, 13-14=-316/320, 4-14=-309/327
BOT CHORD 3-7=-559/334
WEBS 4-7=-460/769

NOTES- (9-10)
1) Wind: ASCE 7-16; Vult=175mph (3-second gust) Vasd=136mph; HVHZ; TCDL=5.0psf; BCDL=5.0psf; h=28ft; Cat. II; Exp C; Encl., GCpi=0.18; C-C Exterior(2E) -1-10-8 to 1-1-8, Interior(1) 1-1-8 to 2-8-5, Exterior(2R) 2-8-5 to 6-11-4; Lumber DOL=1.60 plate grip DOL=1.60
2) Building Designer / Project engineer responsible for verifying applied roof live load shown covers rain loading requirements specific to the use of this truss component.
3) This truss is not designed to support a ceiling and is not intended for use where aesthetics are a consideration.
4) This truss has been designed for a 10.0 psf bottom chord live load nonconcurrent with any other live loads.
5) Refer to girder(s) for truss to truss connections.
6) Refer to girder(s) for truss to truss connections.
7) Provide mechanical connection (by others) of truss to bearing plate capable of withstanding 92 lb uplift at joint 5, 739 lb uplift at joint 3 and 504 lb uplift at joint 7.
8) This truss design requires that a minimum of 7/16" structural wood sheathing be applied directly to the top chord and 1/2" gypsum sheetrock be applied directly to the bottom chord.
9) All truss to truss connection by TCI are on the Truss Placement plan.
10) ARMANDO R. PEREZ PE. # 28026 Ph: (305) 882-8826

LOAD CASE(S) Standard

Job	Truss	Truss Type	Qty	Ply	12715 ROLLING ROAD DR, PINECREST, FL.
12715	J7E	Jack-Open	1	1	Job Reference (optional)

Trusscorp Int., 9590 NW 89 AVE, Medley, FL

8.820 s Dec 4 2024 MiTek Industries, Inc. Thu Jun 5 12:44:07 2025 Page 1
ID:_GLN6EJBZ1GCD23RDL_tAxzKvJz-fpuNPVt9EBt_qDZUDjuyN6t4zf16AGUylF2fGoz9LMc

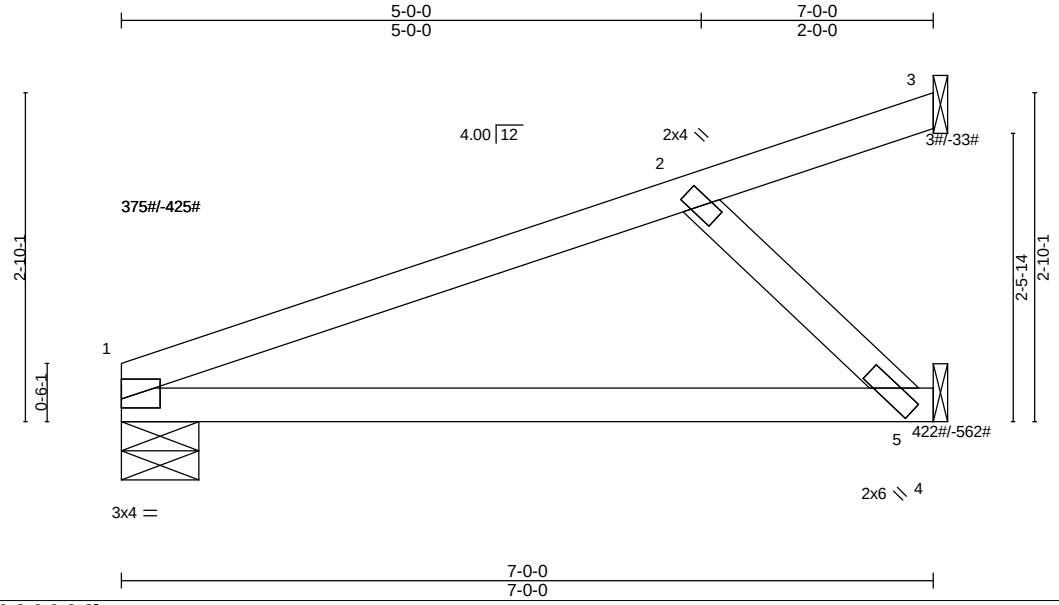

Plate Offsets (X,Y)-- [5:0-3-0,0-0-8]

LOADING (psf)		**SPACING-** 2-0-0		**CSI.**		**DEFL.**	in	(loc)	l/defl	L/d	**PLATES**	**GRIP**
TCLL	30.0	Plate Grip DOL	1.33	TC	0.49	Vert(LL)	-0.07	5-8	>999	360	MT20	244/190
TCDL	15.0	Lumber DOL	1.33	BC	0.45	Vert(CT)	-0.16	5-8	>528	180		
BCLL	0.0	Rep Stress Incr	YES	WB	0.25	Horz(CT)	-0.01	1	n/a	n/a		
BCDL	10.0	Code FBC2020/TPI2014		Matrix-AS							Weight: 25 lb	FT = 0%

LUMBER-
TOP CHORD 2x4 SP No.2
BOT CHORD 2x4 SP No.2
WEBS 2x4 SP No.3

BRACING-
TOP CHORD Structural wood sheathing directly applied.
BOT CHORD Rigid ceiling directly applied.

MiTek recommends that Stabilizers and required cross bracing be installed during truss erection, in accordance with Stabilizer Installation guide.

REACTIONS. (lb/size) 1=375/0-8-0 (min. 0-1-8), 3=3/Mechanical, 5=386/Mechanical
Max Horz 1=386(LC 4)
Max Uplift 1=-425(LC 4), 3=-33(LC 4), 5=-562(LC 4)
Max Grav 1=375(LC 1), 3=3(LC 1), 5=422(LC 5)

FORCES. (lb) - Max. Comp./Max. Ten. - All forces 250 (lb) or less except when shown.
TOP CHORD 1-2=-394/376
BOT CHORD 1-5=-604/373
WEBS 2-5=-513/831

NOTES- (8-9)
1) Wind: ASCE 7-16; Vult=175mph (3-second gust) Vasd=136mph; HVHZ; TCDL=5.0psf; BCDL=5.0psf; h=28ft; Cat. II; Exp C; Encl., GCpi=0.18; C-C Exterior(2E); Lumber DOL=1.60 plate grip DOL=1.60
2) Building Designer / Project engineer responsible for verifying applied roof live load shown covers rain loading requirements specific to the use of this truss component.
3) This truss is not designed to support a ceiling and is not intended for use where aesthetics are a consideration.
4) This truss has been designed for a 10.0 psf bottom chord live load nonconcurrent with any other live loads.
5) Refer to girder(s) for truss to truss connections.
6) Provide mechanical connection (by others) of truss to bearing plate capable of withstanding 425 lb uplift at joint 1, 33 lb uplift at joint 3 and 562 lb uplift at joint 5.
7) This truss design requires that a minimum of 7/16" structural wood sheathing be applied directly to the top chord and 1/2" gypsum sheetrock be applied directly to the bottom chord.
8) All truss to truss connection by TCI are on the Truss Placement plan.
9) ARMANDO R. PEREZ PE. # 28026 Ph: (305) 882-8826

LOAD CASE(S) Standard

Job	Truss	Truss Type	Qty	Ply	12715 ROLLING ROAD DR, PINECREST, FL.
12715	J7F	Jack-Open	6	1	Job Reference (optional)

Trusscorp Int., 9590 NW 89 AVE, Medley, FL

8.820 s Dec 4 2024 MiTek Industries, Inc. Thu Jun 5 12:44:09 2025 Page 1
ID:_GLN6EJBZ1GCD23RDL_tAxzKvJz-bC07pBuPmp7i3WjtK8wQSXyR9SjzeD0FCZXmLhz9LMa

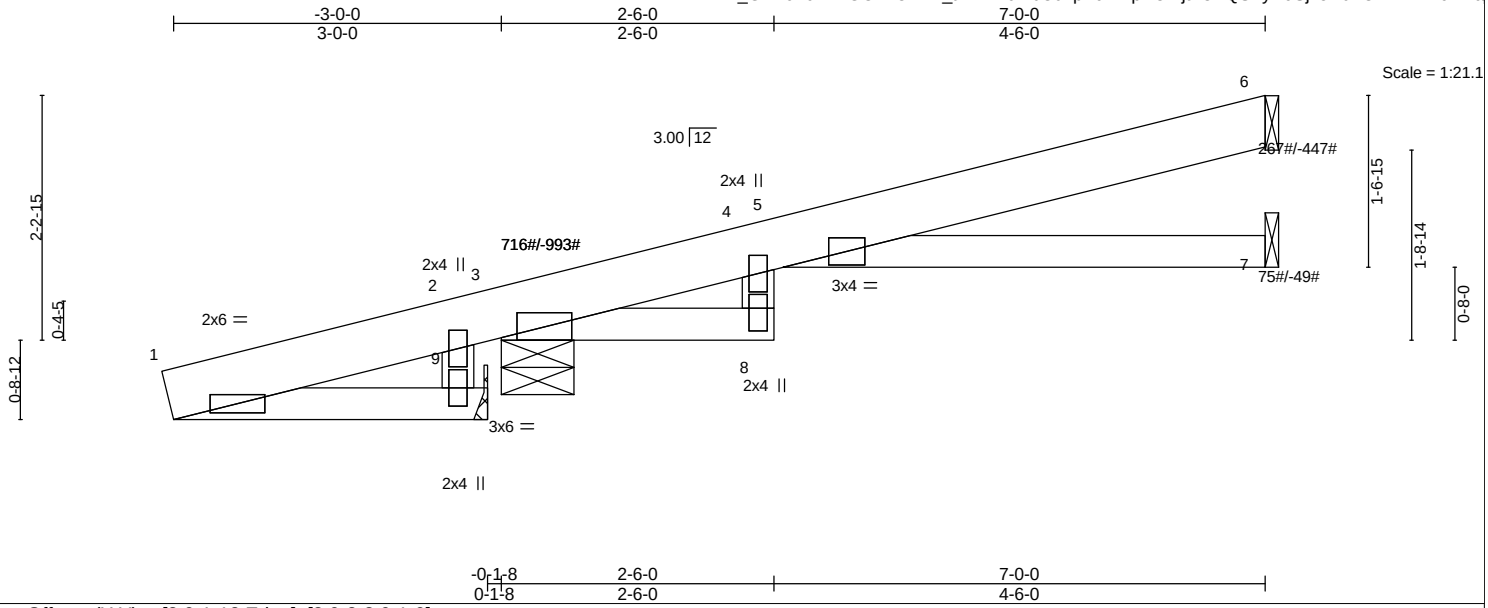

Plate Offsets (X,Y)-- [3:0-1-12,Edge], [8:0-2-8,0-1-0]

LOADING (psf)		SPACING-	2-0-0	CSI.		DEFL.	in	(loc)	l/defl	L/d	PLATES	GRIP
TCLL	30.0	Plate Grip DOL	1.33	TC	0.44	Vert(LL)	0.10	15	>872	360	MT20	244/190
TCDL	15.0	Lumber DOL	1.33	BC	0.42	Vert(CT)	-0.08	15	>999	180		
BCLL	0.0	Rep Stress Incr	YES	WB	0.05	Horz(CT)	-0.02	7	n/a	n/a		
BCDL	10.0	Code FBC2020/TPI2014		Matrix-AS							Weight: 40 lb	FT = 0%

LUMBER-
TOP CHORD 2x6 SP No.2
BOT CHORD 2x4 SP No.2 *Except*
B2: 2x4 SP No.3
WEBS 2x4 SP No.3
OTHERS 2x4 SP No.3

BRACING-
TOP CHORD Structural wood sheathing directly applied.
BOT CHORD Rigid ceiling directly applied.

MiTek recommends that Stabilizers and required cross bracing be installed during truss erection, in accordance with Stabilizer Installation guide.

REACTIONS. (lb/size) 6=252/Mechanical, 3=716/0-8-0 (min. 0-1-8), 7=65/Mechanical, 9=0/Mechanical
Max Horz 3=280(LC 4), 9=141(LC 3)
Max Uplift6=-447(LC 4), 3=-993(LC 4), 7=-49(LC 4)
Max Grav 6=267(LC 5), 3=716(LC 1), 7=75(LC 3)

FORCES. (lb) - Max. Comp./Max. Ten. - All forces 250 (lb) or less except when shown.

NOTES- (8-9)
1) Wind: ASCE 7-16; Vult=175mph (3-second gust) Vasd=136mph; HVHZ; TCDL=5.0psf; BCDL=5.0psf; h=28ft; Cat. II; Exp C; Encl., GCpi=0.18; C-C Exterior(2E) -3-0-11 to 0-0-0, Interior(1) 0-0-0 to 2-7-0, Exterior(2R) 2-7-0 to 6-11-4; Lumber DOL=1.60 plate grip DOL=1.60
2) Building Designer / Project engineer responsible for verifying applied roof live load shown covers rain loading requirements specific to the use of this truss component.
3) This truss has been designed for a 10.0 psf bottom chord live load nonconcurrent with any other live loads.
4) Refer to girder(s) for truss to truss connections.
5) Refer to girder(s) for truss to truss connections.
6) Provide mechanical connection (by others) of truss to bearing plate capable of withstanding 447 lb uplift at joint 6, 993 lb uplift at joint 3 and 49 lb uplift at joint 7.
7) This truss design requires that a minimum of 7/16" structural wood sheathing be applied directly to the top chord and 1/2" gypsum sheetrock be applied directly to the bottom chord.
8) All truss to truss connection by TCI are on the Truss Placement plan.
9) ARMANDO R. PEREZ PE. # 28026 Ph: (305) 882-8826

LOAD CASE(S) Standard

Job	Truss	Truss Type	Qty	Ply	12715 ROLLING ROAD DR, PINECREST, FL.
12715	J7T	JACK-OPEN	3	1	Job Reference (optional)

Trusscorp Int., 9590 NW 89 AVE, Medley, FL

8.820 s Dec 4 2024 MiTek Industries, Inc. Thu Jun 5 12:44:09 2025 Page 1
ID:_GLN6EJBZ1GCD23RDL_tAxzKvJz-bC07pBuPmp7i3WjtK8wQSXyS4Skve9eFCZXmLhz9LMa

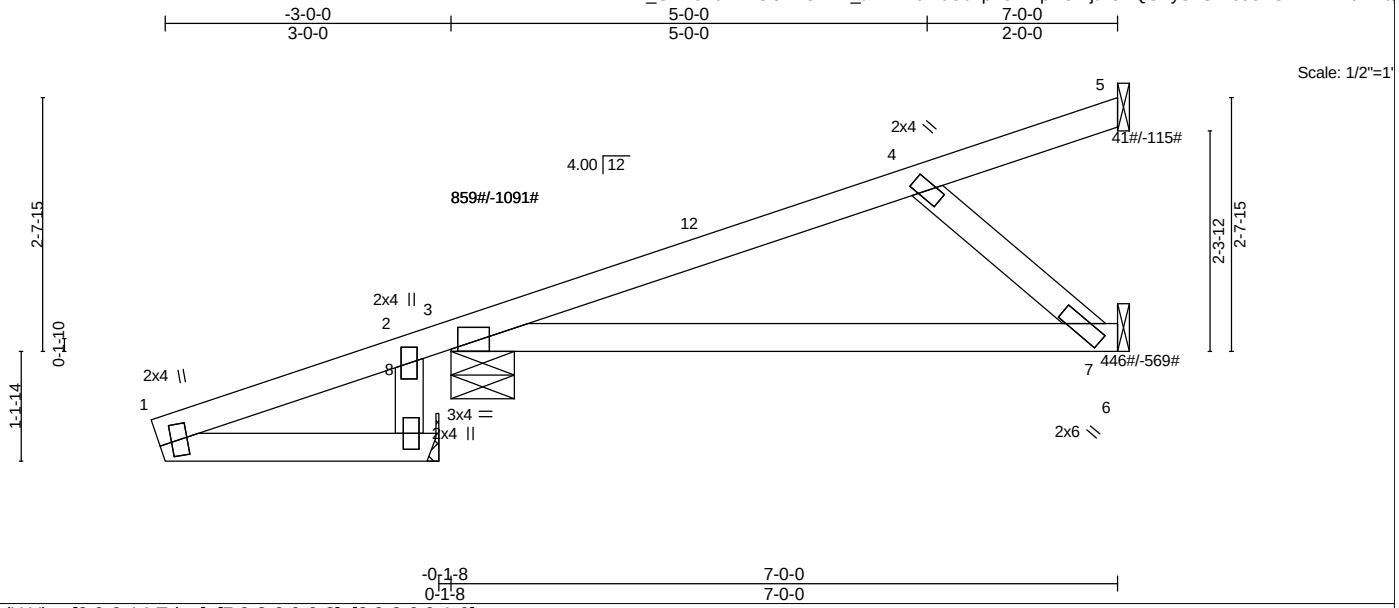

Plate Offsets (X,Y)-- [3:0-0-14,Edge], [7:0-3-0,0-0-8], [8:0-2-0,0-1-0]

LOADING (psf)		SPACING-	2-0-0	CSI.		DEFL.	in	(loc)	l/defl	L/d	PLATES	GRIP
TCLL	30.0	Plate Grip DOL	1.33	TC	0.38	Vert(LL)	-0.05	7-11	>999	360	MT20	244/190
TCDL	15.0	Lumber DOL	1.33	BC	0.36	Vert(CT)	-0.11	7-11	>742	180		
BCLL	0.0	Rep Stress Incr	YES	WB	0.27	Horz(CT)	-0.01	7	n/a	n/a		
BCDL	10.0	Code FBC2020/TPI2014		Matrix-AS							Weight: 35 lb	FT = 0%

LUMBER-
TOP CHORD 2x4 SP No.1
BOT CHORD 2x4 SP No.2
WEBS 2x4 SP No.3
OTHERS 2x4 SP No.3

BRACING-
TOP CHORD Structural wood sheathing directly applied.
BOT CHORD Rigid ceiling directly applied.

MiTek recommends that Stabilizers and required cross bracing be installed during truss erection, in accordance with Stabilizer Installation guide.

REACTIONS. (lb/size) 5=26/Mechanical, 3=687/0-8-0 (min. 0-1-8), 8=0/Mechanical, 7=331/Mechanical
Max Horz 3=181(LC 1), 8=544(LC 4)
Max Uplift5=-115(LC 4), 3=-1091(LC 4), 7=-569(LC 4)
Max Grav 5=41(LC 5), 3=859(LC 5), 7=446(LC 5)

FORCES. (lb) - Max. Comp./Max. Ten. - All forces 250 (lb) or less except when shown.
TOP CHORD 1-2=-505/284, 2-3=-507/293, 3-12=-373/420, 4-12=-336/427
BOT CHORD 3-7=-690/454
WEBS 1-8=-278/544, 4-7=-594/904

NOTES- (8-9)
1) Wind: ASCE 7-16; Vult=175mph (3-second gust) Vasd=136mph; HVHZ; TCDL=5.0psf; BCDL=5.0psf; h=28ft; Cat. II; Exp C; Part. Encl., GCpi=0.55; C-C Exterior(2E) -3-1-3 to 0-0-0, Interior(1) 0-0-0 to 2-8-5, Exterior(2R) 2-8-5 to 6-11-4; Lumber DOL=1.60 plate grip DOL=1.60
2) Building Designer / Project engineer responsible for verifying applied roof live load shown covers rain loading requirements specific to the use of this truss component.
3) This truss has been designed for a 10.0 psf bottom chord live load nonconcurrent with any other live loads.
4) Refer to girder(s) for truss to truss connections.
5) Refer to girder(s) for truss to truss connections.
6) Provide mechanical connection (by others) of truss to bearing plate capable of withstanding 115 lb uplift at joint 5, 1091 lb uplift at joint 3 and 569 lb uplift at joint 7.
7) This truss design requires that a minimum of 7/16" structural wood sheathing be applied directly to the top chord and 1/2" gypsum sheetrock be applied directly to the bottom chord.
8) All truss to truss connection by TCI are on the Truss Placement plan.
9) ARMANDO R. PEREZ PE. # 28026 Ph: (305) 882-8826

LOAD CASE(S) Standard

Job	Truss	Truss Type	Qty	Ply	12715 ROLLING ROAD DR, PINECREST, FL.
12715	J7TA	JACK-OPEN	1	1	Job Reference (optional)

Trusscorp Int., 9590 NW 89 AVE, Medley, FL

8.820 s Dec 4 2024 MiTek Industries, Inc. Thu Jun 5 12:44:11 2025 Page 1
ID:_GLN6EJBZ1GCD23RDL_tAxzKvJz-Xb8uEswfIQOQJqsFSYyuYy1nNGQH64jYft0tPZz9LMY

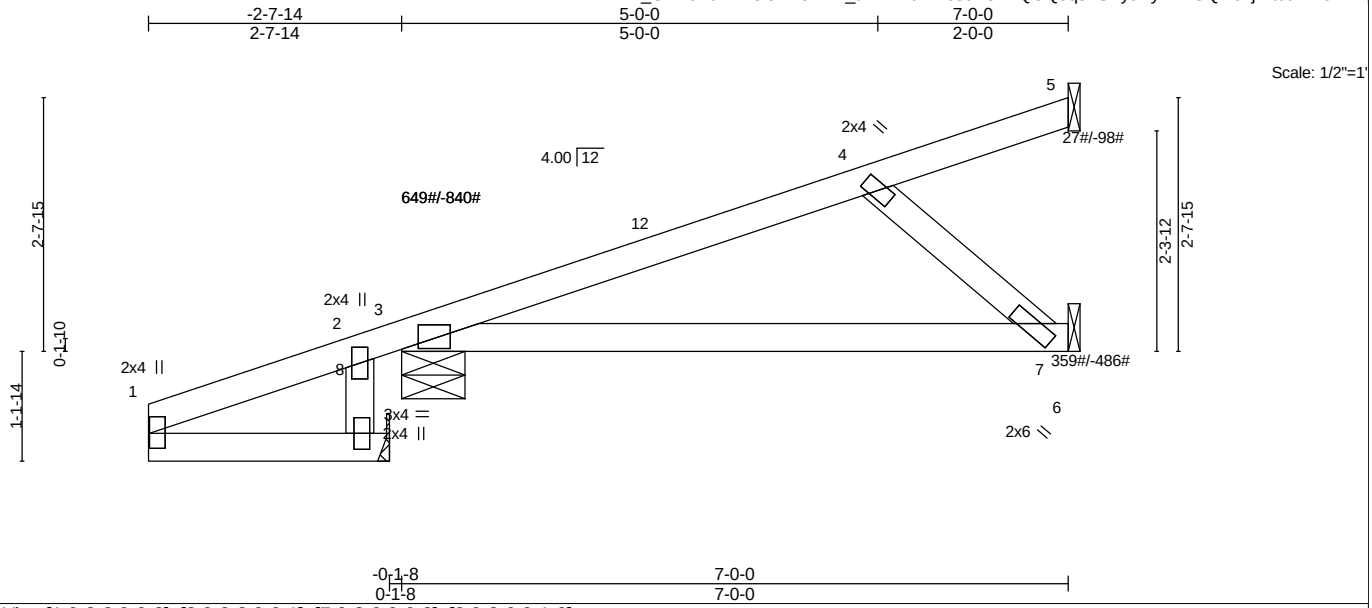

Plate Offsets (X,Y)-- [1:0-2-2,0-0-2], [3:0-2-2,0-0-1], [7:0-3-0,0-0-8], [8:0-2-0,0-1-0]

LOADING (psf)		**SPACING-**	2-0-0	**CSI.**		**DEFL.**	in	(loc)	l/defl	L/d	**PLATES**	**GRIP**
TCLL	30.0	Plate Grip DOL	1.33	TC	0.40	Vert(LL)	-0.05	7-11	>999	360	MT20	244/190
TCDL	15.0	Lumber DOL	1.33	BC	0.37	Vert(CT)	-0.11	7-11	>714	180		
BCLL	0.0	Rep Stress Incr	YES	WB	0.23	Horz(CT)	-0.00	7	n/a	n/a		
BCDL	10.0	Code FBC2020/TPI2014		Matrix-AS							Weight: 34 lb	FT = 0%

LUMBER-
TOP CHORD 2x4 SP No.2
BOT CHORD 2x4 SP No.2
WEBS 2x4 SP No.3
OTHERS 2x4 SP No.3

BRACING-
TOP CHORD Structural wood sheathing directly applied.
BOT CHORD Rigid ceiling directly applied.

MiTek recommends that Stabilizers and required cross bracing be installed during truss erection, in accordance with Stabilizer Installation guide.

REACTIONS. (lb/size) 5=25/Mechanical, 3=649/0-8-0 (min. 0-1-8), 8=0/Mechanical, 7=334/Mechanical
Max Horz 3=211(LC 4), 8=319(LC 4)
Max Uplift 5=-98(LC 4), 3=-840(LC 4), 7=-486(LC 4)
Max Grav 5=27(LC 5), 3=649(LC 1), 7=359(LC 5)

FORCES. (lb) - Max. Comp./Max. Ten. - All forces 250 (lb) or less except when shown.
TOP CHORD 1-2=-289/159, 2-3=-295/175, 3-12=-374/359, 4-12=-332/366
BOT CHORD 3-7=-593/351
WEBS 1-8=-117/321, 4-7=-460/777

NOTES- (8-9)
1) Wind: ASCE 7-16; Vult=175mph (3-second gust) Vasd=136mph; HVHZ; TCDL=5.0psf; BCDL=5.0psf; h=28ft; Cat. II; Exp C; Encl., GCpi=0.18; C-C Exterior(2E) -2-8-7 to 0-0-0, Interior(1) 0-0-0 to 2-8-5, Exterior(2R) 2-8-5 to 6-11-4; Lumber DOL=1.60 plate grip DOL=1.60
2) Building Designer / Project engineer responsible for verifying applied roof live load shown covers rain loading requirements specific to the use of this truss component.
3) This truss has been designed for a 10.0 psf bottom chord live load nonconcurrent with any other live loads.
4) Refer to girder(s) for truss to truss connections.
5) Refer to girder(s) for truss to truss connections.
6) Provide mechanical connection (by others) of truss to bearing plate capable of withstanding 98 lb uplift at joint 5, 840 lb uplift at joint 3 and 486 lb uplift at joint 7.
7) This truss design requires that a minimum of 7/16" structural wood sheathing be applied directly to the top chord and 1/2" gypsum sheetrock be applied directly to the bottom chord.
8) All truss to truss connection by TCI are on the Truss Placement plan.
9) ARMANDO R. PEREZ PE. # 28026 Ph: (305) 882-8826

LOAD CASE(S) Standard

Job	Truss	Truss Type	Qty	Ply	12715 ROLLING ROAD DR, PINECREST, FL.
12715	J7TB	JACK-OPEN	1	1	Job Reference (optional)

Trusscorp Int., 9590 NW 89 AVE, Medley, FL

8.820 s Dec 4 2024 MiTek Industries, Inc. Thu Jun 5 12:44:13 2025 Page 1
ID:_GLN6EJBZ1GCD23RDL_tAxzKvJz-TzGefYxwp1e8Y80eZz?MdN76i34_azir7BVzUSz9LMW

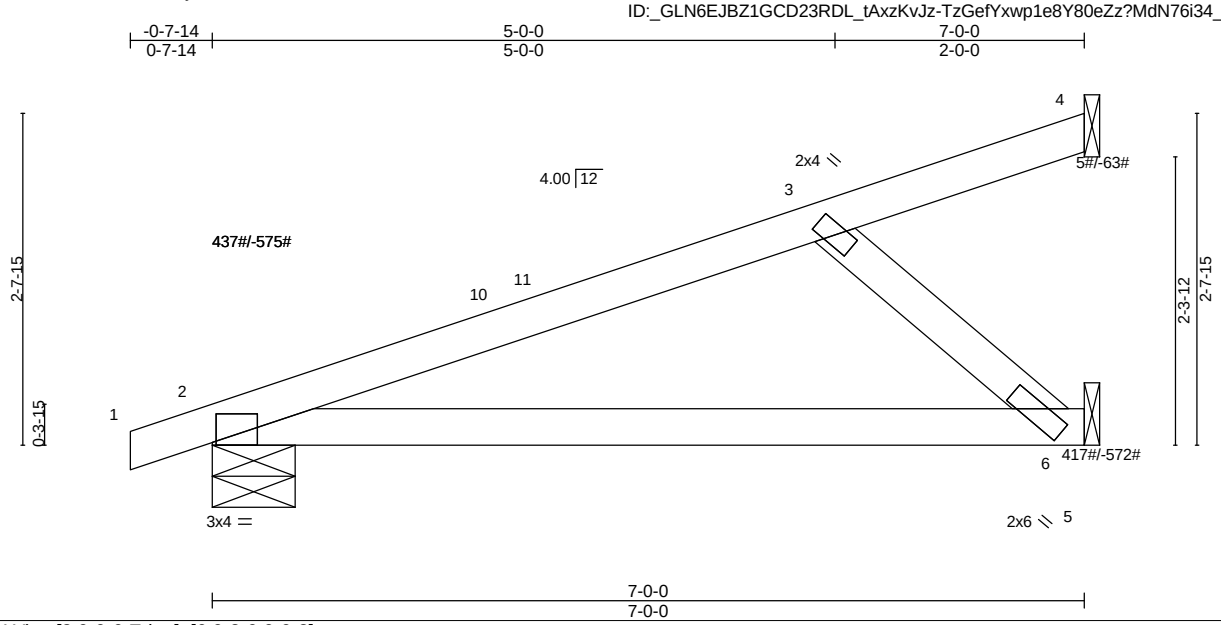

Plate Offsets (X,Y)-- [2:0-0-6,Edge], [6:0-3-0,0-0-8]

LOADING (psf)		**SPACING-**	2-0-0	**CSI.**		**DEFL.**	in	(loc)	l/defl	L/d	**PLATES**	**GRIP**
TCLL	30.0	Plate Grip DOL	1.33	TC	0.47	Vert(LL)	0.09	6-9	>933	360	MT20	244/190
TCDL	15.0	Lumber DOL	1.33	BC	0.42	Vert(CT)	-0.14	6-9	>581	180		
BCLL	0.0	Rep Stress Incr	YES	WB	0.26	Horz(CT)	-0.01	6	n/a	n/a		
BCDL	10.0	Code FBC2020/TPI2014		Matrix-AS							Weight: 26 lb	FT = 0%

LUMBER-
TOP CHORD 2x4 SP No.2
BOT CHORD 2x4 SP No.2
WEBS 2x4 SP No.3

BRACING-
TOP CHORD Structural wood sheathing directly applied.
BOT CHORD Rigid ceiling directly applied.

MiTek recommends that Stabilizers and required cross bracing be installed during truss erection, in accordance with Stabilizer Installation guide.

REACTIONS. (lb/size) 4=5/Mechanical, 2=437/0-8-0 (min. 0-1-8), 6=382/Mechanical
Max Horz 2=452(LC 4)
Max Uplift4=-63(LC 4), 2=-575(LC 4), 6=-572(LC 4)
Max Grav 4=5(LC 1), 2=437(LC 1), 6=417(LC 5)

FORCES. (lb) - Max. Comp./Max. Ten. - All forces 250 (lb) or less except when shown.
TOP CHORD 2-10=-413/427, 10-11=-380/427, 3-11=-371/435
BOT CHORD 2-6=-677/408
WEBS 3-6=-534/887

NOTES- (8-9)
1) Wind: ASCE 7-16; Vult=175mph (3-second gust) Vasd=136mph; HVHZ; TCDL=5.0psf; BCDL=5.0psf; h=28ft; Cat. II; Exp C; Encl., GCpi=0.18; C-C Exterior(2E) -0-7-14 to 2-4-2, Interior(1) 2-4-2 to 2-8-5, Exterior(2R) 2-8-5 to 6-11-4; Lumber DOL=1.60 plate grip DOL=1.60
2) Building Designer / Project engineer responsible for verifying applied roof live load shown covers rain loading requirements specific to the use of this truss component.
3) This truss is not designed to support a ceiling and is not intended for use where aesthetics are a consideration.
4) This truss has been designed for a 10.0 psf bottom chord live load nonconcurrent with any other live loads.
5) Refer to girder(s) for truss to truss connections.
6) Provide mechanical connection (by others) of truss to bearing plate capable of withstanding 63 lb uplift at joint 4, 575 lb uplift at joint 2 and 572 lb uplift at joint 6.
7) This truss design requires that a minimum of 7/16" structural wood sheathing be applied directly to the top chord and 1/2" gypsum sheetrock be applied directly to the bottom chord.
8) All truss to truss connection by TCI are on the Truss Placement plan.
9) ARMANDO R. PEREZ PE. # 28026 Ph: (305) 882-8826

LOAD CASE(S) Standard

Job	Truss	Truss Type	Qty	Ply	12715 ROLLING ROAD DR, PINECREST, FL.
12715	J7TC	JACK-OPEN	1	1	Job Reference (optional)

Trusscorp Int., 9590 NW 89 AVE, Medley, FL

8.820 s Dec 4 2024 MiTek Industries, Inc. Thu Jun 5 12:44:14 2025 Page 1
ID:_GLN6EJBZ1GCD23RDL_tAxzKvJz-yAp0tuyYaLm?AHbq7hWb9afHMTQAJRB_MrEX0uz9LMV

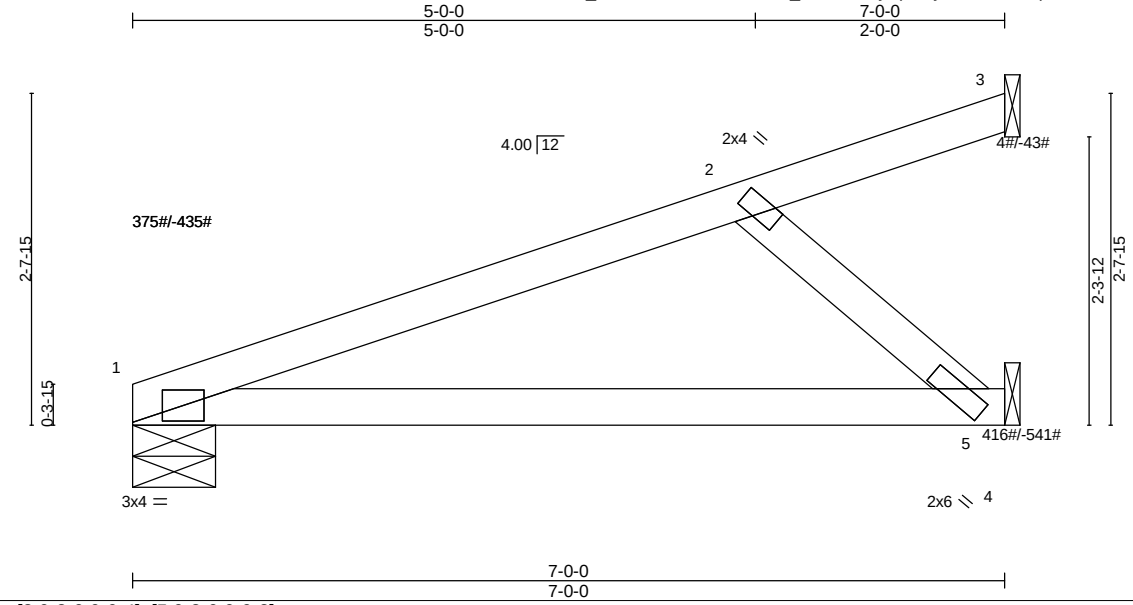

Plate Offsets (X,Y)-- [2:0-2-0,0-0-4], [5:0-3-0,0-0-8]

LOADING (psf)		**SPACING-**	2-0-0	**CSI.**		**DEFL.**	in	(loc)	l/defl	L/d	**PLATES**	**GRIP**
TCLL	30.0	Plate Grip DOL	1.33	TC	0.48	Vert(LL)	0.09	5-8	>876	360	MT20	244/190
TCDL	15.0	Lumber DOL	1.33	BC	0.42	Vert(CT)	-0.14	5-8	>576	180		
BCLL	0.0	Rep Stress Incr	YES	WB	0.25	Horz(CT)	-0.01	5	n/a	n/a		
BCDL	10.0	Code FBC2020/TPI2014		Matrix-AS							Weight: 25 lb	FT = 0%

LUMBER-
TOP CHORD 2x4 SP No.2
BOT CHORD 2x4 SP No.2
WEBS 2x4 SP No.3

BRACING-
TOP CHORD Structural wood sheathing directly applied.
BOT CHORD Rigid ceiling directly applied.

MiTek recommends that Stabilizers and required cross bracing be installed during truss erection, in accordance with Stabilizer Installation guide.

REACTIONS. (lb/size) 1=375/0-8-0 (min. 0-1-8), 3=3/Mechanical, 5=387/Mechanical
Max Horz 1=386(LC 4)
Max Uplift1=-435(LC 4), 3=-43(LC 4), 5=-541(LC 4)
Max Grav 1=375(LC 1), 3=4(LC 5), 5=416(LC 5)

FORCES. (lb) - Max. Comp./Max. Ten. - All forces 250 (lb) or less except when shown.
TOP CHORD 1-2=-416/415
BOT CHORD 1-5=-639/406
WEBS 2-5=-532/838

NOTES- (8-9)
1) Wind: ASCE 7-16; Vult=175mph (3-second gust) Vasd=136mph; HVHZ; TCDL=5.0psf; BCDL=5.0psf; h=28ft; Cat. II; Exp C; Encl., GCpi=0.18; C-C Exterior(2E); Lumber DOL=1.60 plate grip DOL=1.60
2) Building Designer / Project engineer responsible for verifying applied roof live load shown covers rain loading requirements specific to the use of this truss component.
3) This truss is not designed to support a ceiling and is not intended for use where aesthetics are a consideration.
4) This truss has been designed for a 10.0 psf bottom chord live load nonconcurrent with any other live loads.
5) Refer to girder(s) for truss to truss connections.
6) Provide mechanical connection (by others) of truss to bearing plate capable of withstanding 435 lb uplift at joint 1, 43 lb uplift at joint 3 and 541 lb uplift at joint 5.
7) This truss design requires that a minimum of 7/16" structural wood sheathing be applied directly to the top chord and 1/2" gypsum sheetrock be applied directly to the bottom chord.
8) All truss to truss connection by TCI are on the Truss Placement plan.
9) ARMANDO R. PEREZ PE. # 28026 Ph: (305) 882-8826

LOAD CASE(S) Standard

Job	Truss	Truss Type	Qty	Ply	12715 ROLLING ROAD DR, PINECREST, FL.
12715	T1	Common	23	1	Job Reference (optional)

Trusscorp Int., 9590 NW 89 AVE, Medley, FL

8.820 s Dec 4 2024 MiTek Industries, Inc. Thu Jun 5 12:44:16 2025 Page 1
ID:_GLN6EJBZ1GCD23RDL_tAxzKvJz-uYxnHa_o6y0jPblDE6Y3F?lYZH0GnL5Hp9je4nz9LMT

-3-0-0	5-5-11	10-8-0	15-10-5	21-4-0	24-4-0
3-0-0	5-5-11	5-2-5	5-2-5	5-5-11	3-0-0

Scale = 1:45.6

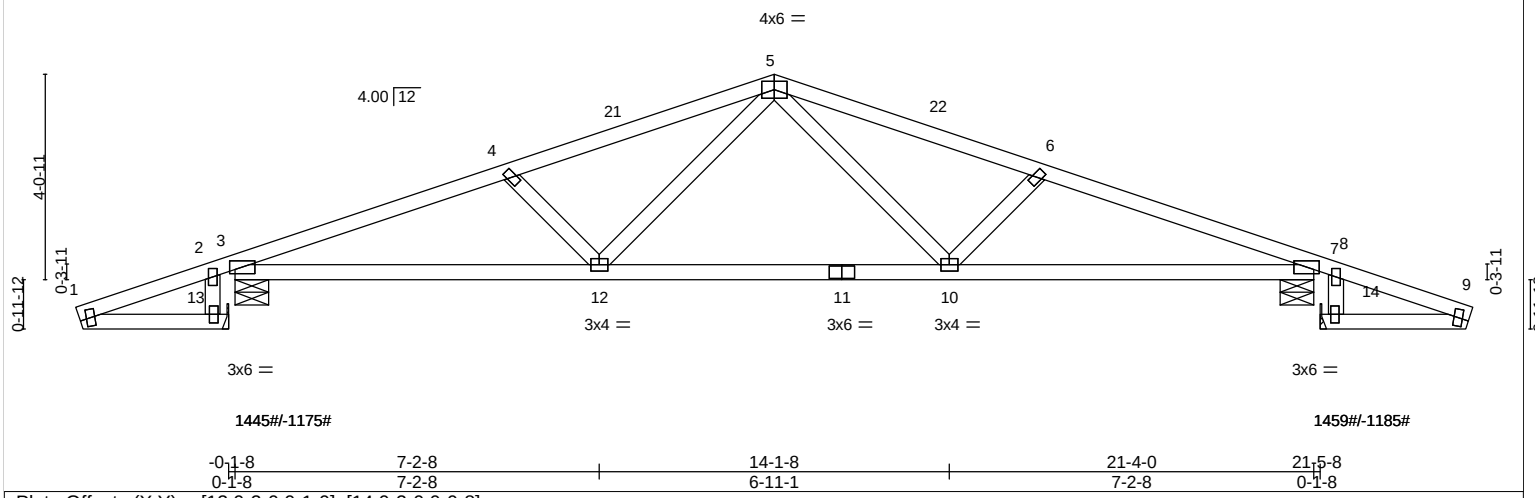

-0-1-8	7-2-8	14-1-8	21-4-0	21-5-8
0-1-8	7-2-8	6-11-1	7-2-8	0-1-8

Plate Offsets (X,Y)-- [13:0-2-0,0-1-0], [14:0-2-0,0-0-8]

LOADING (psf)		**SPACING-**	2-0-0	**CSI.**		**DEFL.**	in	(loc)	l/defl	L/d	**PLATES**	**GRIP**
TCLL	30.0	Plate Grip DOL	1.33	TC	0.82	Vert(LL)	0.22	10-12	>999	360	MT20	244/190
TCDL	15.0	Lumber DOL	1.33	BC	0.83	Vert(CT)	-0.34	10-12	>746	180		
BCLL	0.0	Rep Stress Incr	YES	WB	0.22	Horz(CT)	0.08	7	n/a	n/a		
BCDL	10.0	Code FBC2020/TPI2014		Matrix-AS							Weight: 108 lb	FT = 0%

LUMBER-
TOP CHORD 2x4 SP No.2
BOT CHORD 2x4 SP No.2
WEBS 2x4 SP No.3
OTHERS 2x4 SP No.3

BRACING-
TOP CHORD Structural wood sheathing directly applied.
BOT CHORD Rigid ceiling directly applied.

MiTek recommends that Stabilizers and required cross bracing be installed during truss erection, in accordance with Stabilizer Installation guide.

REACTIONS. (lb/size) 3=1445/0-8-0 (min. 0-1-11), 13=0/Mechanical, 14=0/Mechanical, 7=1459/0-8-0 (min. 0-1-12)
Max Horz 3=287(LC 9), 13=390(LC 4), 14=-279(LC 4)
Max Uplift3=-1175(LC 4), 7=-1185(LC 4)
Max Grav 3=1445(LC 1), 7=1459(LC 1)

FORCES. (lb) - Max. Comp./Max. Ten. - All forces 250 (lb) or less except when shown.
TOP CHORD 1-2=-362/329, 2-3=-362/346, 3-4=-2522/1897, 4-21=-2204/1714, 5-21=-2133/1723, 5-22=-2100/1698, 6-22=-2170/1688, 6-7=-2478/1864, 7-8=-256/237, 8-9=-259/222
BOT CHORD 3-12=-1854/2434, 11-12=-1309/1752, 10-11=-1309/1752, 7-10=-1818/2387
WEBS 5-10=-306/589, 6-10=-439/443, 5-12=-341/624, 4-12=-459/462, 1-13=-272/391, 9-14=-157/280

NOTES- (9-10)
1) Unbalanced roof live loads have been considered for this design.
2) Wind: ASCE 7-16; Vult=175mph (3-second gust) Vasd=136mph; HVHZ; TCDL=5.0psf; BCDL=5.0psf; h=28ft; Cat. II; Exp C; Encl., GCpi=0.18; C-C Exterior(2E) -3-1-3 to 0-3-7, Interior(1) 0-3-7 to 7-8-0, Exterior(2R) 7-8-0 to 13-8-0, Interior(1) 13-8-0 to 21-4-0, Exterior(2E) 21-4-0 to 24-5-3; Lumber DOL=1.60 plate grip DOL=1.60
3) Building Designer / Project engineer responsible for verifying applied roof live load shown covers rain loading requirements specific to the use of this truss component.
4) All plates are 2x4 MT20 unless otherwise indicated.
5) This truss has been designed for a 10.0 psf bottom chord live load nonconcurrent with any other live loads.
6) Refer to girder(s) for truss to truss connections.
7) Provide mechanical connection (by others) of truss to bearing plate capable of withstanding 1175 lb uplift at joint 3 and 1185 lb uplift at joint 7.
8) This truss design requires that a minimum of 7/16" structural wood sheathing be applied directly to the top chord and 1/2" gypsum sheetrock be applied directly to the bottom chord.
9) All truss to truss connection by TCI are on the Truss Placement plan.
10) ARMANDO R. PEREZ PE. # 28026 Ph: (305) 882-8826

LOAD CASE(S) Standard

Job	Truss	Truss Type	Qty	Ply	12715 ROLLING ROAD DR, PINECREST, FL.
12715	T2	Common	1	1	Job Reference (optional)

Trusscorp Int., 9590 NW 89 AVE, Medley, FL

8.820 s Dec 4 2024 MiTek Industries, Inc. Thu Jun 5 12:44:18 2025 Page 1
ID:_GLN6EJBZ1GCD23RDL_tAxzKvJz-qx3XiG?2eaGQevvbMWaXKQqv64jDFERaHTCk9fz9LMR

-3-0-0	5-5-11	10-8-0	15-10-5	21-4-0	22-8-12
3-0-0	5-5-11	5-2-5	5-2-5	5-5-11	1-4-12

Scale = 1:42.7

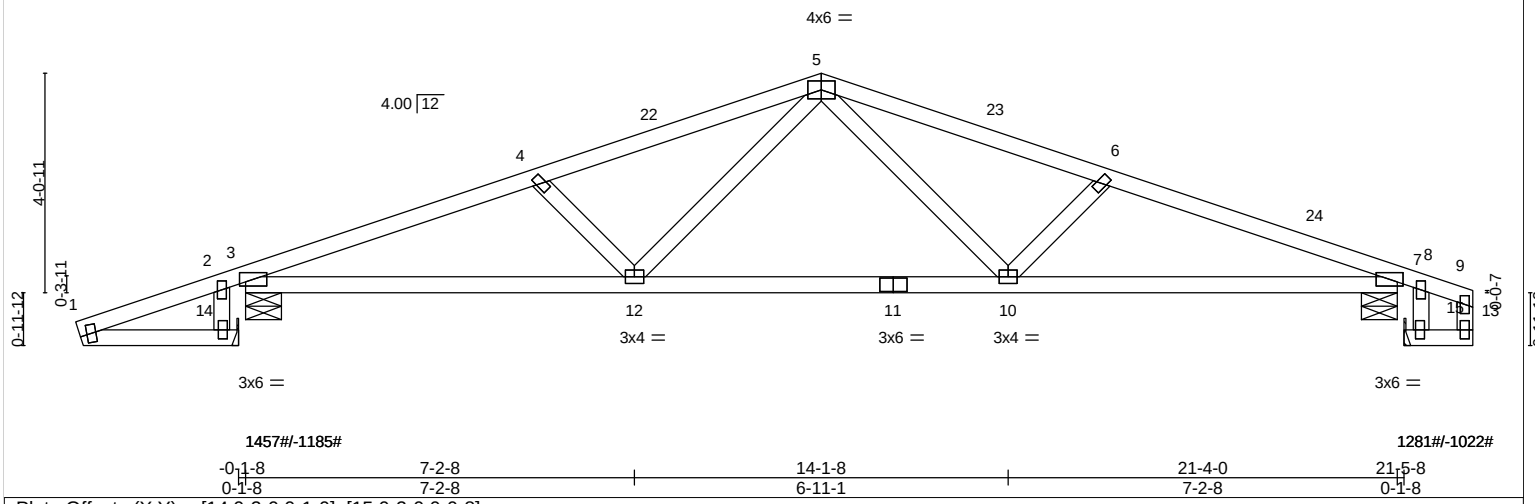

Plate Offsets (X,Y)-- [14:0-2-0,0-1-0], [15:0-2-0,0-0-8]

LOADING (psf)		SPACING-	2-0-0	CSI.		DEFL.	in	(loc)	l/defl	L/d	PLATES	GRIP
TCLL	30.0	Plate Grip DOL	1.33	TC	0.75	Vert(LL)	0.20	10-12	>999	360	MT20	244/190
TCDL	15.0	Lumber DOL	1.33	BC	0.73	Vert(CT)	-0.32	10-12	>794	180		
BCLL	0.0	Rep Stress Incr	YES	WB	0.23	Horz(CT)	0.07	7	n/a	n/a		
BCDL	10.0	Code FBC2020/TPI2014		Matrix-AS							Weight: 104 lb	FT = 0%

LUMBER-
TOP CHORD 2x4 SP No.2
BOT CHORD 2x4 SP No.2
WEBS 2x4 SP No.3
OTHERS 2x4 SP No.3

BRACING-
TOP CHORD Structural wood sheathing directly applied.
BOT CHORD Rigid ceiling directly applied.

MiTek recommends that Stabilizers and required cross bracing be installed during truss erection, in accordance with Stabilizer Installation guide.

REACTIONS. (lb/size) 3=1457/0-8-0 (min. 0-1-11), 14=-0/Mechanical, 15=0/Mechanical, 7=1281/0-8-0 (min. 0-1-8)
Max Horz 3=-338(LC 4), 14=395(LC 4)
Max Uplift3=-1185(LC 4), 7=-1022(LC 4)
Max Grav 3=1457(LC 1), 7=1281(LC 1)

FORCES. (lb) - Max. Comp./Max. Ten. - All forces 250 (lb) or less except when shown.
TOP CHORD 1-2=-367/332, 2-3=-366/349, 3-4=-2554/1929, 4-22=-2235/1745, 5-22=-2163/1754, 5-23=-2184/1781, 6-23=-2256/1771, 6-24=-2498/1964, 7-24=-2582/1950
BOT CHORD 3-12=-1662/2340, 11-12=-1118/1659, 10-11=-1118/1659, 7-10=-1700/2370
WEBS 5-10=-372/649, 6-10=-476/485, 5-12=-337/620, 4-12=-460/465, 1-14=-275/396

NOTES- (9-10)
1) Unbalanced roof live loads have been considered for this design.
2) Wind: ASCE 7-16; Vult=175mph (3-second gust) Vasd=136mph; HVHZ; TCDL=5.0psf; BCDL=5.0psf; h=28ft; Cat. II; Exp C; Encl., GCpi=0.18; C-C Exterior(2E) -3-1-3 to 0-3-7, Interior(1) 0-3-7 to 7-8-0, Exterior(2R) 7-8-0 to 13-8-0, Interior(1) 13-8-0 to 19-7-0, Exterior(2E) 19-7-0 to 22-7-0; Lumber DOL=1.60 plate grip DOL=1.60
3) Building Designer / Project engineer responsible for verifying applied roof live load shown covers rain loading requirements specific to the use of this truss component.
4) All plates are 2x4 MT20 unless otherwise indicated.
5) This truss has been designed for a 10.0 psf bottom chord live load nonconcurrent with any other live loads.
6) Refer to girder(s) for truss to truss connections.
7) Provide mechanical connection (by others) of truss to bearing plate capable of withstanding 1185 lb uplift at joint 3 and 1022 lb uplift at joint 7.
8) This truss design requires that a minimum of 7/16" structural wood sheathing be applied directly to the top chord and 1/2" gypsum sheetrock be applied directly to the bottom chord.
9) All truss to truss connection by TCI are on the Truss Placement plan.
10) ARMANDO R. PEREZ PE. # 28026 Ph: (305) 882-8826

LOAD CASE(S) Standard

Job	Truss	Truss Type	Qty	Ply	12715 ROLLING ROAD DR, PINECREST, FL.
12715	T3	Common	6	1	Job Reference (optional)

Trusscorp Int., 9590 NW 89 AVE, Medley, FL

8.820 s Dec 4 2024 MiTek Industries, Inc. Thu Jun 5 12:44:20 2025 Page 1
ID:_GLN6EJBZ1GCD23RDL_tAxzKvJz-mJBI7x1JABW8uC3_Txd?PrvFXuOej8qtknhrDYz9LMP

-3-0-0	5-5-11	10-8-0	15-10-5	21-4-0
3-0-0	5-5-11	5-2-5	5-2-5	5-5-11

Scale = 1:41.5

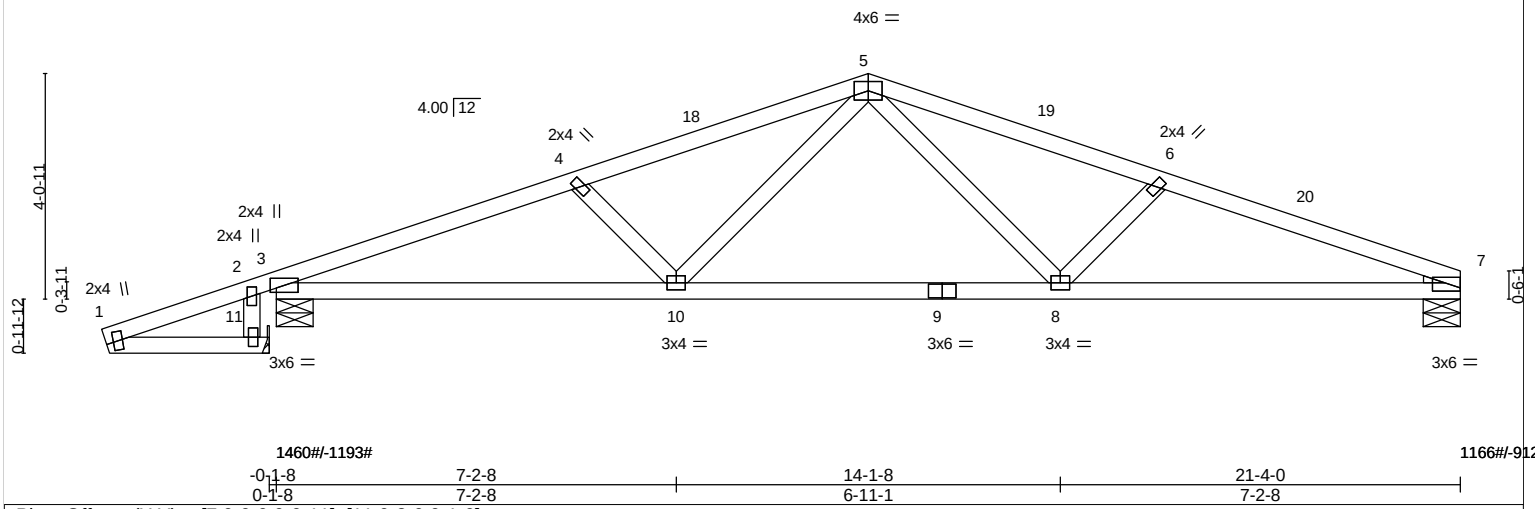

-0-1-8	7-2-8	14-1-8	21-4-0
0-1-8	7-2-8	6-11-1	7-2-8

Plate Offsets (X,Y)-- [7:0-0-0,0-0-11], [11:0-2-0,0-1-0]

LOADING (psf)		**SPACING-**	2-0-0	**CSI.**		**DEFL.**	in	(loc)	l/defl	L/d	**PLATES**	**GRIP**
TCLL	30.0	Plate Grip DOL	1.33	TC	0.75	Vert(LL)	0.20	8-10	>999	360	MT20	244/190
TCDL	15.0	Lumber DOL	1.33	BC	0.74	Vert(CT)	-0.32	8-10	>805	180		
BCLL	0.0	Rep Stress Incr	YES	WB	0.24	Horz(CT)	0.07	7	n/a	n/a		
BCDL	10.0	Code FBC2020/TPI2014		Matrix-AS							Weight: 98 lb	FT = 0%

LUMBER-
TOP CHORD 2x4 SP No.2
BOT CHORD 2x4 SP No.2
WEBS 2x4 SP No.3
OTHERS 2x4 SP No.3
WEDGE
Right: 2x2 SP No.3

BRACING-
TOP CHORD Structural wood sheathing directly applied.
BOT CHORD Rigid ceiling directly applied.

MiTek recommends that Stabilizers and required cross bracing be installed during truss erection, in accordance with Stabilizer Installation guide.

REACTIONS. (lb/size) 3=1460/0-8-0 (min. 0-1-12), 11=0/Mechanical, 7=1166/0-8-0 (min. 0-1-8)
Max Horz 3=-300(LC 4), 11=395(LC 4)
Max Uplift3=-1193(LC 4), 7=-912(LC 4)
Max Grav 3=1460(LC 1), 7=1166(LC 1)

FORCES. (lb) - Max. Comp./Max. Ten. - All forces 250 (lb) or less except when shown.
TOP CHORD 1-2=-367/332, 2-3=-366/349, 3-4=-2563/1950, 4-18=-2243/1765, 5-18=-2172/1774, 5-19=-2208/1836, 6-19=-2282/1827, 6-20=-2532/2033, 7-20=-2612/2018
BOT CHORD 3-10=-1720/2348, 9-10=-1178/1669, 8-9=-1178/1669, 7-8=-1811/2402
WEBS 5-8=-416/669, 6-8=-489/517, 5-10=-333/620, 4-10=-460/466, 1-11=-276/396

NOTES- (8-9)
1) Unbalanced roof live loads have been considered for this design.
2) Wind: ASCE 7-16; Vult=175mph (3-second gust) Vasd=136mph; HVHZ; TCDL=5.0psf; BCDL=5.0psf; h=28ft; Cat. II; Exp C; Encl., GCpi=0.18; C-C Exterior(2E) -3-1-3 to 0-3-7, Interior(1) 0-3-7 to 7-8-0, Exterior(2R) 7-8-0 to 13-8-0, Interior(1) 13-8-0 to 18-4-0, Exterior(2E) 18-4-0 to 21-4-0; Lumber DOL=1.60 plate grip DOL=1.60
3) Building Designer / Project engineer responsible for verifying applied roof live load shown covers rain loading requirements specific to the use of this truss component.
4) This truss has been designed for a 10.0 psf bottom chord live load nonconcurrent with any other live loads.
5) Refer to girder(s) for truss to truss connections.
6) Provide mechanical connection (by others) of truss to bearing plate capable of withstanding 1193 lb uplift at joint 3 and 912 lb uplift at joint 7.
7) This truss design requires that a minimum of 7/16" structural wood sheathing be applied directly to the top chord and 1/2" gypsum sheetrock be applied directly to the bottom chord.
8) All truss to truss connection by TCI are on the Truss Placement plan.
9) ARMANDO R. PEREZ PE. # 28026 Ph: (305) 882-8826

LOAD CASE(S) Standard

Job	Truss	Truss Type	Qty	Ply	12715 ROLLING ROAD DR, PINECREST, FL.
12715	T4	COMMON	1	1	Job Reference (optional)

Trusscorp Int., 9590 NW 89 AVE, Medley, FL

8.820 s Dec 4 2024 MiTek Industries, Inc. Thu Jun 5 12:44:22 2025 Page 1
ID:_GLN6EJBZ1GCD23RDL_tAxzKvJz-jiI2Yd2Zioms7WCNbMfTUG?Xdi59Bs3AB4AyIQz9LMN

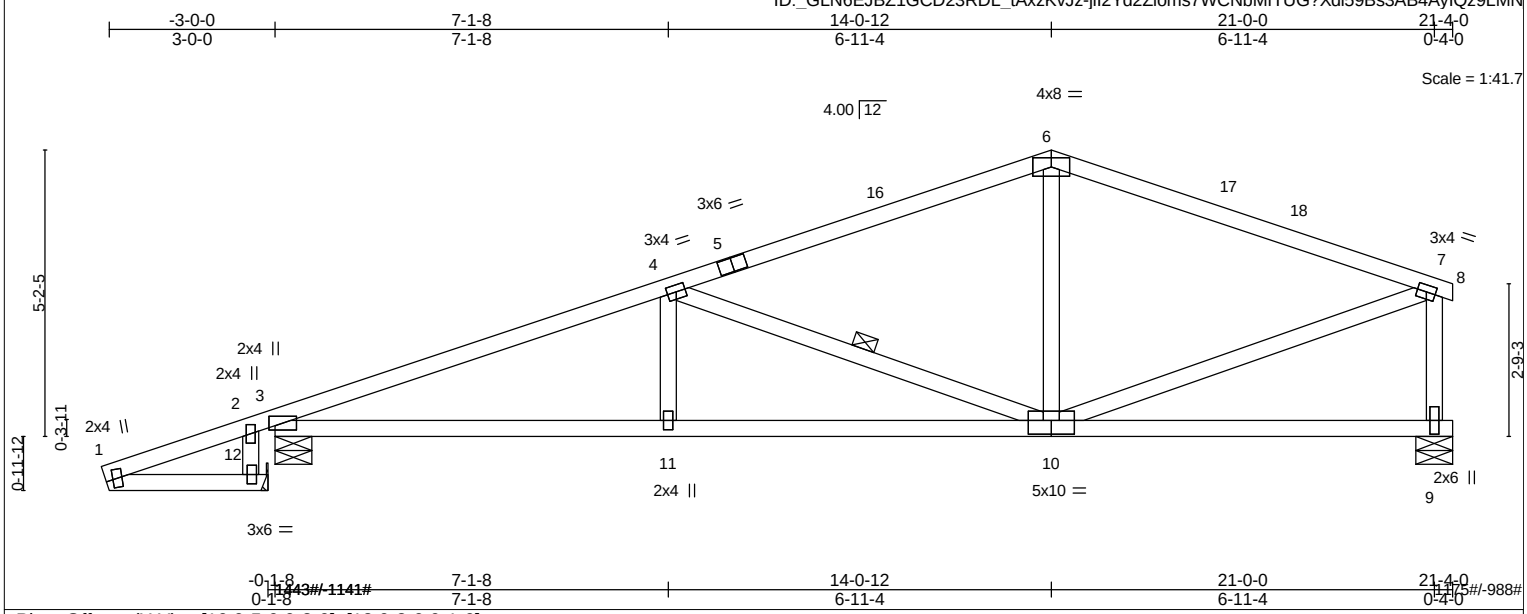

Plate Offsets (X,Y)-- [10:0-5-0,0-3-0], [12:0-2-0,0-1-0]

LOADING (psf)		**SPACING-**	2-0-0	**CSI.**		**DEFL.**	in	(loc)	l/defl	L/d	**PLATES**	**GRIP**
TCLL	30.0	Plate Grip DOL	1.33	TC	0.97	Vert(LL)	0.14	10-11	>999	360	MT20	244/190
TCDL	15.0	Lumber DOL	1.33	BC	0.67	Vert(CT)	-0.22	10-11	>999	180		
BCLL	0.0	Rep Stress Incr	YES	WB	0.96	Horz(CT)	0.05	9	n/a	n/a		
BCDL	10.0	Code FBC2020/TPI2014		Matrix-AS							Weight: 110 lb	FT = 0%

LUMBER-
TOP CHORD 2x4 SP No.2
BOT CHORD 2x4 SP No.2
WEBS 2x4 SP No.3
OTHERS 2x4 SP No.3

BRACING-
TOP CHORD Structural wood sheathing directly applied.
BOT CHORD Rigid ceiling directly applied.
WEBS 1 Row at midpt 4-10

MiTek recommends that Stabilizers and required cross bracing be installed during truss erection, in accordance with Stabilizer Installation guide.

REACTIONS. (lb/size) 3=1443/0-8-0 (min. 0-1-11), 9=1175/0-8-0 (min. 0-1-8), 12=0/Mechanical
Max Horz 3=233(LC 9), 12=342(LC 4)
Max Uplift3=-1141(LC 4), 9=-988(LC 4)
Max Grav 3=1443(LC 1), 9=1175(LC 1)

FORCES. (lb) - Max. Comp./Max. Ten. - All forces 250 (lb) or less except when shown.
TOP CHORD 1-2=-318/292, 2-3=-316/309, 3-4=-2403/1684, 4-5=-1332/1069, 5-16=-1234/1078, 6-16=-1220/1088, 6-17=-1206/1069, 17-18=-1234/1056, 7-18=-1298/1055
BOT CHORD 3-11=-1648/2184, 10-11=-1648/2184
WEBS 4-11=0/255, 4-10=-1137/828, 6-10=0/278, 7-10=-930/1248, 7-9=-1122/1016, 1-12=-233/343

NOTES- (8-9)
1) Unbalanced roof live loads have been considered for this design.
2) Wind: ASCE 7-16; Vult=175mph (3-second gust) Vasd=136mph; HVHZ; TCDL=5.0psf; BCDL=5.0psf; h=28ft; Cat. II; Exp C; Encl., GCpi=0.18; C-C Exterior(2E) -3-1-3 to 0-3-7, Interior(1) 0-3-7 to 11-0-12, Exterior(2R) 11-0-12 to 17-0-12, Interior(1) 17-0-12 to 18-4-0, Exterior(2E) 18-4-0 to 21-4-0; Lumber DOL=1.60 plate grip DOL=1.60
3) Building Designer / Project engineer responsible for verifying applied roof live load shown covers rain loading requirements specific to the use of this truss component.
4) This truss has been designed for a 10.0 psf bottom chord live load nonconcurrent with any other live loads.
5) Refer to girder(s) for truss to truss connections.
6) Provide mechanical connection (by others) of truss to bearing plate capable of withstanding 1141 lb uplift at joint 3 and 988 lb uplift at joint 9.
7) This truss design requires that a minimum of 7/16" structural wood sheathing be applied directly to the top chord and 1/2" gypsum sheetrock be applied directly to the bottom chord.
8) All truss to truss connection by TCI are on the Truss Placement plan.
9) ARMANDO R. PEREZ PE. # 28026 Ph: (305) 882-8826

LOAD CASE(S) Standard

Job	Truss	Truss Type	Qty	Ply	12715 ROLLING ROAD DR, PINECREST, FL.
12715	T4A	Common	1	1	Job Reference (optional)

Trusscorp Int., 9590 NW 89 AVE, Medley, FL

8.820 s Dec 4 2024 MiTek Industries, Inc. Thu Jun 5 12:44:24 2025 Page 1
ID:_GLN6EJBZ1GCD23RDL_tAxzKvJz-f5QozJ4pEQ0aMqMlinhxZh4yLVqnfubTfOf3NJz9LML

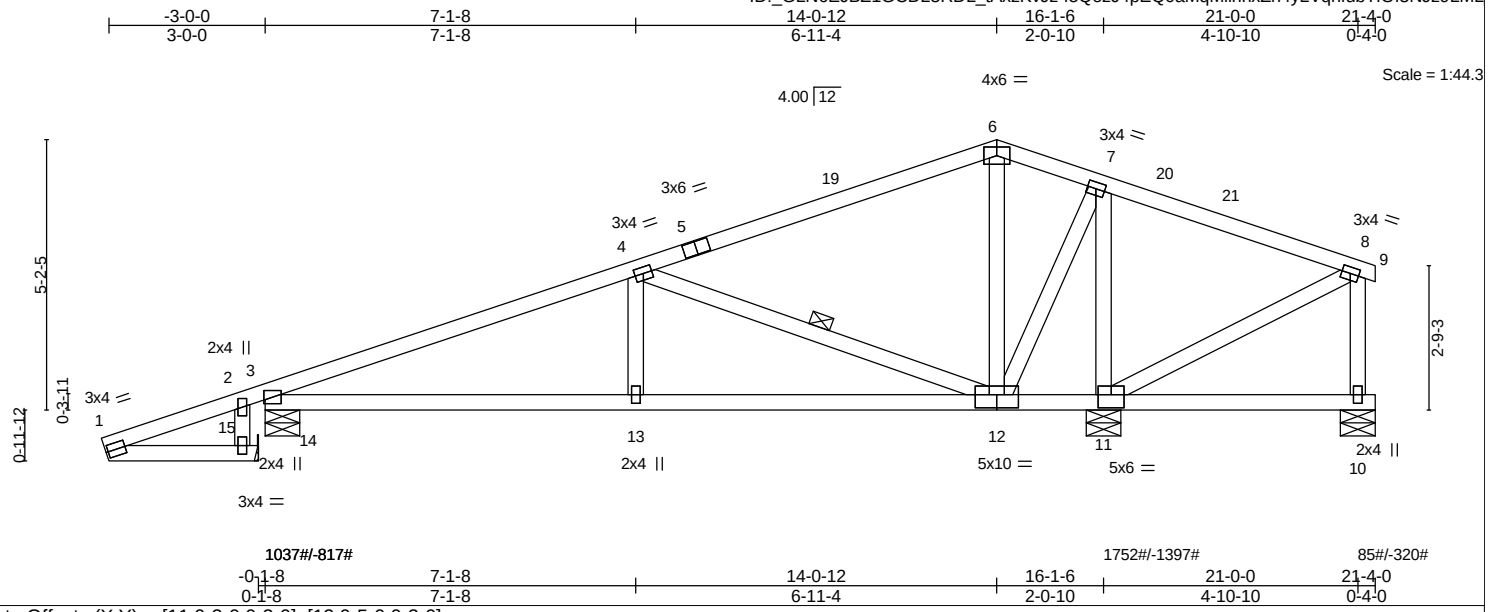

Plate Offsets (X,Y)-- [11:0-3-0,0-3-0], [12:0-5-0,0-3-0]

LOADING (psf)		SPACING-	2-0-0	CSI.		DEFL.	in	(loc)	l/defl	L/d	PLATES	GRIP
TCLL	30.0	Plate Grip DOL	1.33	TC	0.64	Vert(LL)	0.06	13	>999	360	MT20	244/190
TCDL	15.0	Lumber DOL	1.33	BC	0.47	Vert(CT)	-0.12	12-13	>999	180		
BCLL	0.0	Rep Stress Incr	YES	WB	0.51	Horz(CT)	0.02	11	n/a	n/a		
BCDL	10.0	Code FBC2020/TPI2014		Matrix-AS							Weight: 120 lb	FT = 0%

LUMBER-
TOP CHORD 2x4 SP No.2
BOT CHORD 2x4 SP No.2
WEBS 2x4 SP No.3
OTHERS 2x4 SP No.3

BRACING-
TOP CHORD Structural wood sheathing directly applied.
BOT CHORD Rigid ceiling directly applied.
WEBS 1 Row at midpt 4-12

MiTek recommends that Stabilizers and required cross bracing be installed during truss erection, in accordance with Stabilizer Installation guide.

REACTIONS. (lb/size) 3=1037/0-8-0 (min. 0-1-8), 11=1752/0-8-0 (min. 0-2-1), 10=-170/0-8-0 (min. 0-1-8), 14=0/Mechanical
Max Horz 3=203(LC 1), 14=320(LC 4)
Max Uplift3=-817(LC 4), 11=-1397(LC 4), 10=-320(LC 9)
Max Grav 3=1037(LC 1), 11=1752(LC 1), 10=85(LC 4)

FORCES. (lb) - Max. Comp./Max. Ten. - All forces 250 (lb) or less except when shown.
TOP CHORD 1-2=-297/265, 2-3=-295/281, 3-4=-1255/768, 7-20=-329/595, 20-21=-334/531, 8-21=-341/525
BOT CHORD 3-13=-787/1103, 12-13=-787/1103, 11-12=-498/415
WEBS 4-13=0/290, 4-12=-1225/946, 6-12=-405/375, 8-11=-563/470, 8-10=-60/356, 1-15=-204/320, 14-15=-203/320, 7-11=-1408/1196, 7-12=-720/1020

NOTES- (8-9)
1) Unbalanced roof live loads have been considered for this design.
2) Wind: ASCE 7-16; Vult=175mph (3-second gust) Vasd=136mph; HVHZ; TCDL=5.0psf; BCDL=5.0psf; h=28ft; Cat. II; Exp C; Encl., GCpi=0.18; C-C Exterior(2E) -3-1-3 to 0-3-7, Interior(1) 0-3-7 to 11-0-12, Exterior(2R) 11-0-12 to 17-0-12, Interior(1) 17-0-12 to 18-4-0, Exterior(2E) 18-4-0 to 21-4-0; Lumber DOL=1.60 plate grip DOL=1.60
3) Building Designer / Project engineer responsible for verifying applied roof live load shown covers rain loading requirements specific to the use of this truss component.
4) This truss has been designed for a 10.0 psf bottom chord live load nonconcurrent with any other live loads.
5) Refer to girder(s) for truss to truss connections.
6) Provide mechanical connection (by others) of truss to bearing plate capable of withstanding 817 lb uplift at joint 3, 1397 lb uplift at joint 11 and 320 lb uplift at joint 10.
7) This truss design requires that a minimum of 7/16" structural wood sheathing be applied directly to the top chord and 1/2" gypsum sheetrock be applied directly to the bottom chord.
8) All truss to truss connection by TCI are on the Truss Placement plan.
9) ARMANDO R. PEREZ PE. # 28026 Ph: (305) 882-8826

LOAD CASE(S) Standard

Job	Truss	Truss Type	Qty	Ply	12715 ROLLING ROAD DR, PINECREST, FL.
12715	T5T	COMMON	1	1	Job Reference (optional)

Trusscorp Int., 9590 NW 89 AVE, Medley, FL

8.820 s Dec 4 2024 MiTek Industries, Inc. Thu Jun 5 12:44:25 2025 Page 1
ID:_GLN6EJBZ1GCD23RDL_tAxzKvJz-7H_BAf5R?j8R__xyGVCA6vd23v7IOFocu2PcvlzLMK

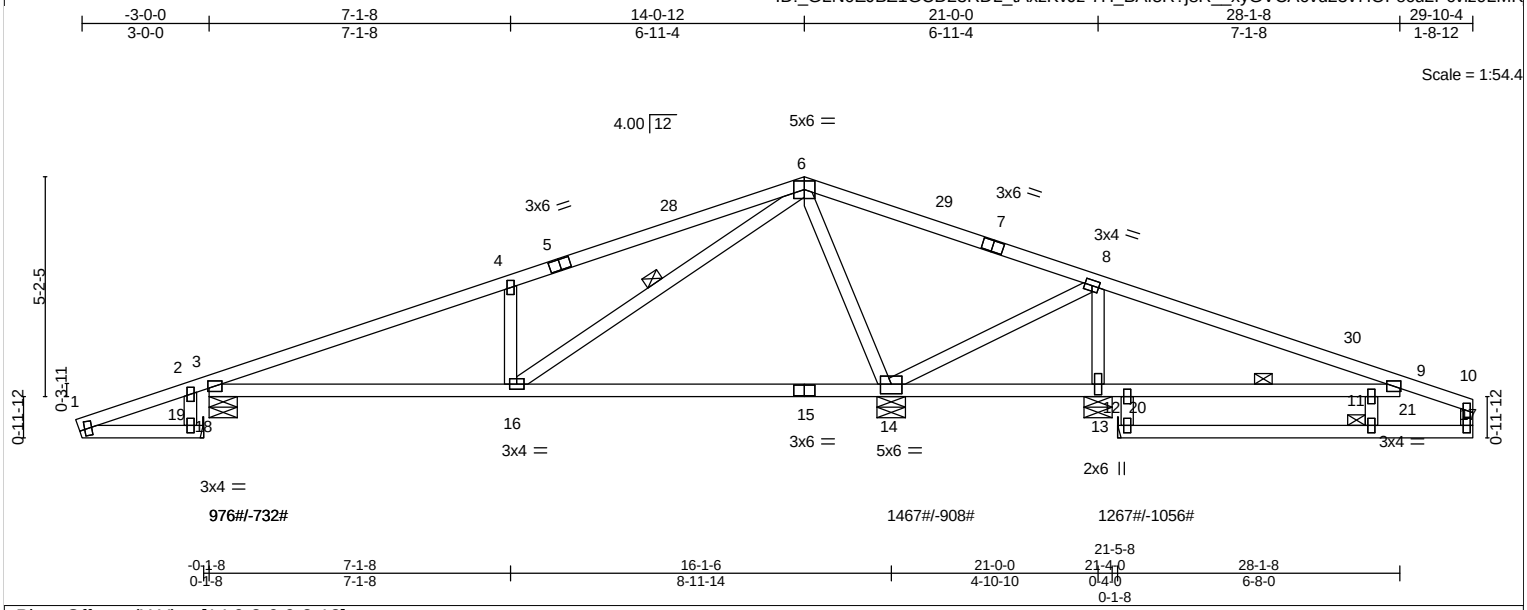

Plate Offsets (X,Y)-- [14:0-3-0,0-2-12]

LOADING (psf)		SPACING-	2-0-0	CSI.		DEFL.	in	(loc)	l/defl	L/d	PLATES	GRIP
TCLL	30.0	Plate Grip DOL	1.33	TC	0.96	Vert(LL)	-0.12	14-16	>999	360	MT20	244/190
TCDL	15.0	Lumber DOL	1.33	BC	0.58	Vert(CT)	-0.26	14-16	>735	180		
BCLL	0.0	Rep Stress Incr	YES	WB	0.83	Horz(CT)	0.01	13	n/a	n/a		
BCDL	10.0	Code FBC2020/TPI2014		Matrix-AS							Weight: 149 lb	FT = 0%

LUMBER-
TOP CHORD 2x4 SP No.2
BOT CHORD 2x4 SP No.2
WEBS 2x4 SP No.3
OTHERS 2x4 SP No.3

BRACING-
TOP CHORD Structural wood sheathing directly applied.
BOT CHORD Rigid ceiling directly applied. Except:
1 Row at midpt 12-25
WEBS 1 Row at midpt 6-16
JOINTS 1 Brace at Jt(s): 21

MiTek recommends that Stabilizers and required cross bracing be installed during truss erection, in accordance with Stabilizer Installation guide.

REACTIONS. (lb/size) 3=935/0-8-0 (min. 0-1-8), 14=1467/0-8-0 (min. 0-1-12), 13=984/0-8-0 (min. 0-1-8), 18=0/Mechanical, 20=0/Mechanical
Max Horz 3=-228(LC 4), 18=274(LC 4)
Max Uplift3=-732(LC 4), 14=-908(LC 4), 13=-1056(LC 4)
Max Grav 3=976(LC 9), 14=1467(LC 1), 13=1267(LC 10)

FORCES. (lb) - Max. Comp./Max. Ten. - All forces 250 (lb) or less except when shown.
TOP CHORD 1-2=-255/258, 2-3=-252/274, 3-4=-1086/563, 4-5=-1103/781, 5-28=-994/791, 6-28=-991/801, 6-29=-593/1052, 7-29=-593/964, 7-8=-605/874, 8-30=-1164/1278, 9-30=-1184/1115
BOT CHORD 3-16=-351/943, 15-16=-363/500, 14-15=-363/500, 13-14=-1103/1273, 12-13=-1103/1273, 11-12=-1103/1273, 9-11=-1103/1273
WEBS 6-14=-1533/1256, 8-14=-352/559, 8-13=-1152/1002, 6-16=-1042/1443, 4-16=-667/681, 1-19=-196/275, 18-19=-196/274

NOTES- (9-10)
1) Unbalanced roof live loads have been considered for this design.
2) Wind: ASCE 7-16; Vult=175mph (3-second gust) Vasd=136mph; HVHZ; TCDL=5.0psf; BCDL=5.0psf; h=28ft; Cat. II; Exp C; Encl., GCpi=0.18; C-C Exterior(2E) -3-1-3 to 0-3-7, Interior(1) 0-3-7 to 11-0-12, Exterior(2R) 11-0-12 to 17-0-12, Interior(1) 17-0-12 to 26-8-8, Exterior(2E) 26-8-8 to 29-8-8; cantilever right exposed ; porch left exposed; Lumber DOL=1.60 plate grip DOL=1.60
3) Building Designer / Project engineer responsible for verifying applied roof live load shown covers rain loading requirements specific to the use of this truss component.
4) All plates are 2x4 MT20 unless otherwise indicated.
5) This truss has been designed for a 10.0 psf bottom chord live load nonconcurrent with any other live loads.
6) Refer to girder(s) for truss to truss connections.
7) Provide mechanical connection (by others) of truss to bearing plate capable of withstanding 732 lb uplift at joint 3, 908 lb uplift at joint 14 and 1056 lb uplift at joint 13.
8) This truss design requires that a minimum of 7/16" structural wood sheathing be applied directly to the top chord and 1/2" gypsum sheetrock be applied directly to the bottom chord.
9) All truss to truss connection by TCI are on the Truss Placement plan.
10) ARMANDO R. PEREZ PE. # 28026 Ph: (305) 882-8826

LOAD CASE(S) Standard

Job	Truss	Truss Type	Qty	Ply	12715 ROLLING ROAD DR, PINECREST, FL.
12715	T6T	COMMON	1	1	Job Reference (optional)

Trusscorp Int., 9590 NW 89 AVE, Medley, FL

8.820 s Dec 4 2024 MiTek Industries, Inc. Thu Jun 5 12:44:26 2025 Page 1
ID:_GLN6EJBZ1GCD23RDL_tAxzKvJz-bTYZO?54l1GIc7W8qCkPf69FiJTS7i7l6i89RCz9LMJ

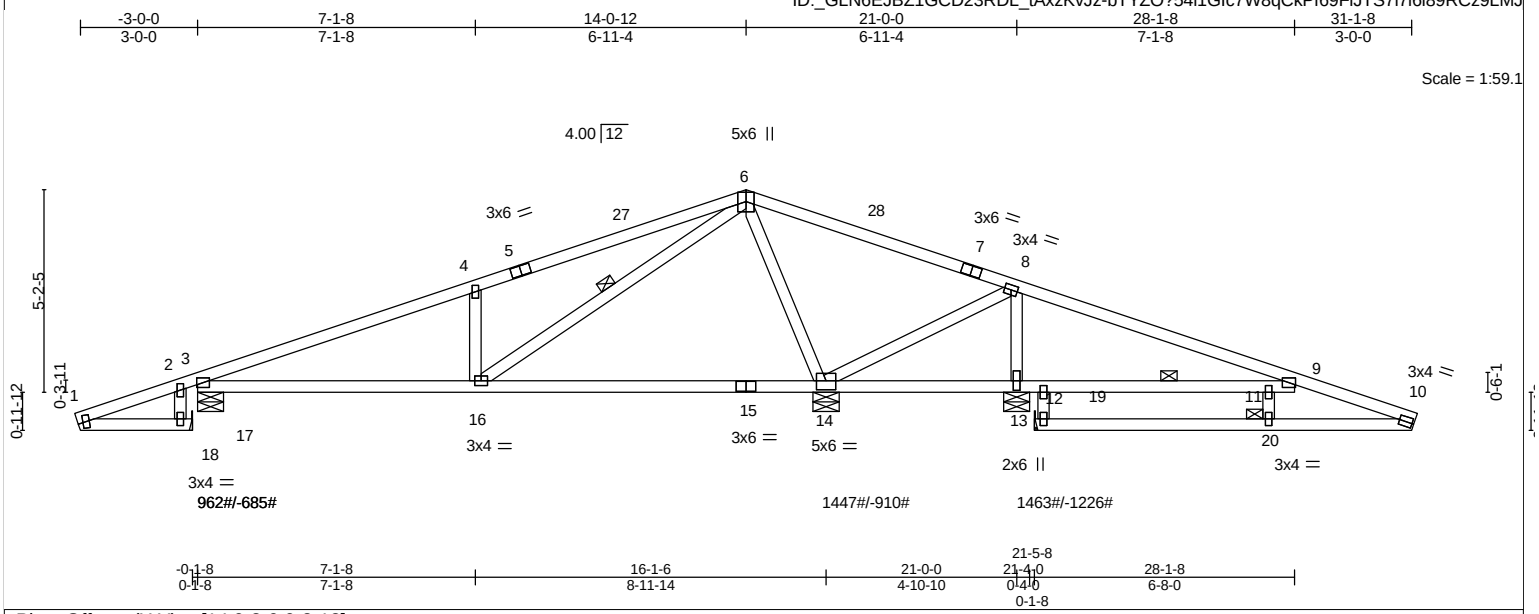

Plate Offsets (X,Y)-- [14:0-3-0,0-2-12]

LOADING (psf)		SPACING-	2-0-0	CSI.		DEFL.	in	(loc)	l/defl	L/d	PLATES	GRIP
TCLL	30.0	Plate Grip DOL	1.33	TC	0.77	Vert(LL)	-0.12	14-16	>999	360	MT20	244/190
TCDL	15.0	Lumber DOL	1.33	BC	0.58	Vert(CT)	-0.26	14-16	>738	180		
BCLL	0.0	Rep Stress Incr	YES	WB	0.89	Horz(CT)	0.01	13	n/a	n/a		
BCDL	10.0	Code FBC2020/TPI2014		Matrix-AS							Weight: 152 lb	FT = 0%

LUMBER-

TOP CHORD	2x4 SP No.2 *Except*
	T3: 2x4 SP No.1
BOT CHORD	2x4 SP No.2
WEBS	2x4 SP No.3
OTHERS	2x4 SP No.3

BRACING-

TOP CHORD	Structural wood sheathing directly applied.
BOT CHORD	Rigid ceiling directly applied. Except:
	1 Row at midpt 12-24
WEBS	1 Row at midpt 6-16
JOINTS	1 Brace at Jt(s): 20

MiTek recommends that Stabilizers and required cross bracing be installed during truss erection, in accordance with Stabilizer Installation guide.

REACTIONS. (lb/size) 3=889/0-8-0 (min. 0-1-8), 14=1447/0-8-0 (min. 0-1-11), 13=1186/0-8-0 (min. 0-1-12), 17=0/Mechanical, 19=0/Mechanical
Max Horz 3=-215(LC 10), 17=267(LC 4), 19=-319(LC 4)
Max Uplift3=-685(LC 4), 14=-910(LC 4), 13=-1226(LC 4)
Max Grav 3=962(LC 9), 14=1447(LC 1), 13=1463(LC 10)

FORCES. (lb) - Max. Comp./Max. Ten. - All forces 250 (lb) or less except when shown.

TOP CHORD	1-2=-247/256, 2-3=-244/272, 3-4=-1044/427, 4-5=-1061/645, 5-27=-952/655, 6-27=-949/665, 6-28=-779/1234, 7-28=-780/1148, 7-8=-792/1057, 8-9=-1577/1708, 9-10=-304/328
BOT CHORD	3-16=-495/955, 15-16=-296/364, 14-15=-296/364, 13-14=-1280/1373, 12-13=-1280/1373, 11-12=-1280/1373, 9-11=-1280/1373
WEBS	6-14=-1642/1368, 8-14=-564/806, 8-13=-1349/1175, 6-16=-1051/1446, 4-16=-668/685, 19-20=-250/319, 10-20=-249/319, 1-18=-194/267, 17-18=-194/267

NOTES- (9-10)
1) Unbalanced roof live loads have been considered for this design.
2) Wind: ASCE 7-16; Vult=175mph (3-second gust) Vasd=136mph; HVHZ; TCDL=5.0psf; BCDL=5.0psf; h=28ft; Cat. II; Exp C; Encl., GCpi=0.18; C-C Exterior(2E) -3-1-3 to 0-3-7, Interior(1) 0-3-7 to 11-0-12, Exterior(2R) 11-0-12 to 17-0-12, Interior(1) 17-0-12 to 28-1-8, Exterior(2E) 28-1-8 to 31-2-11; cantilever right exposed ; porch left exposed; Lumber DOL=1.60 plate grip DOL=1.60
3) Building Designer / Project engineer responsible for verifying applied roof live load shown covers rain loading requirements specific to the use of this truss component.
4) All plates are 2x4 MT20 unless otherwise indicated.
5) This truss has been designed for a 10.0 psf bottom chord live load nonconcurrent with any other live loads.
6) Refer to girder(s) for truss to truss connections.
7) Provide mechanical connection (by others) of truss to bearing plate capable of withstanding 685 lb uplift at joint 3, 910 lb uplift at joint 14 and 1226 lb uplift at joint 13.
8) This truss design requires that a minimum of 7/16" structural wood sheathing be applied directly to the top chord and 1/2" gypsum sheetrock be applied directly to the bottom chord.
9) All truss to truss connection by TCI are on the Truss Placement plan.
10) ARMANDO R. PEREZ PE. # 28026 Ph: (305) 882-8826

LOAD CASE(S) Standard

Job	Truss	Truss Type	Qty	Ply	12715 ROLLING ROAD DR, PINECREST, FL.
12715	T7	Common	9	1	Job Reference (optional)

Trusscorp Int., 9590 NW 89 AVE, Medley, FL

8.820 s Dec 4 2024 MiTek Industries, Inc. Thu Jun 5 12:44:27 2025 Page 1
ID:_GLN6EJBZ1GCD23RDL_tAxzKvJz-3g6xbL6iWLP9DH5KOvFeBKiQOjmfsJ6vLMujzez9LMI

-3-0-0	5-1-14	10-0-5	14-10-12	20-0-10	23-0-10
3-0-0	5-1-14	4-10-7	4-10-7	5-1-14	3-0-0

Scale = 1:43.4

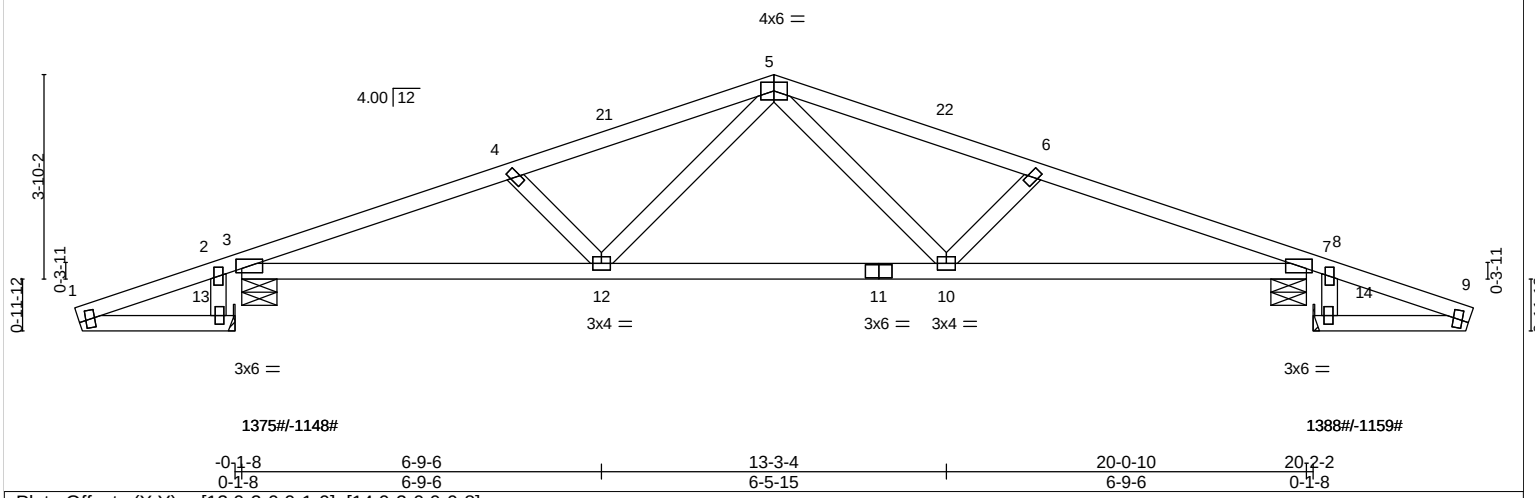

-0-1-8	6-9-6	13-3-4	20-0-10	20-2-2
0-1-8	6-9-6	6-5-15	6-9-6	0-1-8

Plate Offsets (X,Y)-- [13:0-2-0,0-1-0], [14:0-2-0,0-0-8]

LOADING (psf)		**SPACING-**	2-0-0	**CSI.**		**DEFL.**	in	(loc)	l/defl	L/d	**PLATES**	**GRIP**
TCLL	30.0	Plate Grip DOL	1.33	TC	0.78	Vert(LL)	0.20	10-12	>999	360	MT20	244/190
TCDL	15.0	Lumber DOL	1.33	BC	0.78	Vert(CT)	-0.30	10-12	>808	180		
BCLL	0.0	Rep Stress Incr	YES	WB	0.20	Horz(CT)	0.07	7	n/a	n/a		
BCDL	10.0	Code FBC2020/TPI2014		Matrix-AS							Weight: 103 lb	FT = 0%

LUMBER-
TOP CHORD 2x4 SP No.2
BOT CHORD 2x4 SP No.2
WEBS 2x4 SP No.3
OTHERS 2x4 SP No.3

BRACING-
TOP CHORD Structural wood sheathing directly applied.
BOT CHORD Rigid ceiling directly applied.

MiTek recommends that Stabilizers and required cross bracing be installed during truss erection, in accordance with Stabilizer Installation guide.

REACTIONS. (lb/size) 3=1375/0-8-0 (min. 0-1-10), 13=-0/Mechanical, 14=-0/Mechanical, 7=1388/0-8-0 (min. 0-1-10)
Max Horz 3=279(LC 9), 13=400(LC 4), 14=-297(LC 4)
Max Uplift3=-1148(LC 4), 7=-1159(LC 4)
Max Grav 3=1375(LC 1), 7=1388(LC 1)

FORCES. (lb) - Max. Comp./Max. Ten. - All forces 250 (lb) or less except when shown.
TOP CHORD 1-2=-371/330, 2-3=-371/347, 3-4=-2339/1801, 4-21=-2046/1631, 5-21=-1981/1641, 5-22=-1950/1616, 6-22=-2014/1606, 6-7=-2298/1769, 7-8=-273/250, 8-9=-276/234
BOT CHORD 3-12=-1782/2281, 11-12=-1282/1659, 10-11=-1282/1659, 7-10=-1747/2236
WEBS 5-10=-277/539, 6-10=-403/410, 5-12=-310/572, 4-12=-421/428, 1-13=-273/400, 9-14=-171/298

NOTES- (9-10)
1) Unbalanced roof live loads have been considered for this design.
2) Wind: ASCE 7-16; Vult=175mph (3-second gust) Vasd=136mph; HVHZ; TCDL=5.0psf; BCDL=5.0psf; h=28ft; Cat. II; Exp C; Encl., GCpi=0.18; C-C Exterior(2E) -3-1-3 to 0-3-7, Interior(1) 0-3-7 to 7-0-5, Exterior(2R) 7-0-5 to 13-0-5, Interior(1) 13-0-5 to 20-0-10, Exterior(2E) 20-0-10 to 23-1-13; Lumber DOL=1.60 plate grip DOL=1.60
3) Building Designer / Project engineer responsible for verifying applied roof live load shown covers rain loading requirements specific to the use of this truss component.
4) All plates are 2x4 MT20 unless otherwise indicated.
5) This truss has been designed for a 10.0 psf bottom chord live load nonconcurrent with any other live loads.
6) Refer to girder(s) for truss to truss connections.
7) Provide mechanical connection (by others) of truss to bearing plate capable of withstanding 1148 lb uplift at joint 3 and 1159 lb uplift at joint 7.
8) This truss design requires that a minimum of 7/16" structural wood sheathing be applied directly to the top chord and 1/2" gypsum sheetrock be applied directly to the bottom chord.
9) All truss to truss connection by TCI are on the Truss Placement plan.
10) ARMANDO R. PEREZ PE. # 28026 Ph: (305) 882-8826

LOAD CASE(S) Standard

Job	Truss	Truss Type	Qty	Ply	12715 ROLLING ROAD DR, PINECREST, FL.
12715	T7A	COMMON	1	1	Job Reference (optional)

Trusscorp Int., 9590 NW 89 AVE, Medley, FL

8.820 s Dec 4 2024 MiTek Industries, Inc. Thu Jun 5 12:44:29 2025 Page 1
ID:_GLN6EJBZ1GCD23RDL_tAxzKvJz-?2Dh008y2yftTbFjVKH6GlnnpWUTKDNCogNq2Wz9LMG

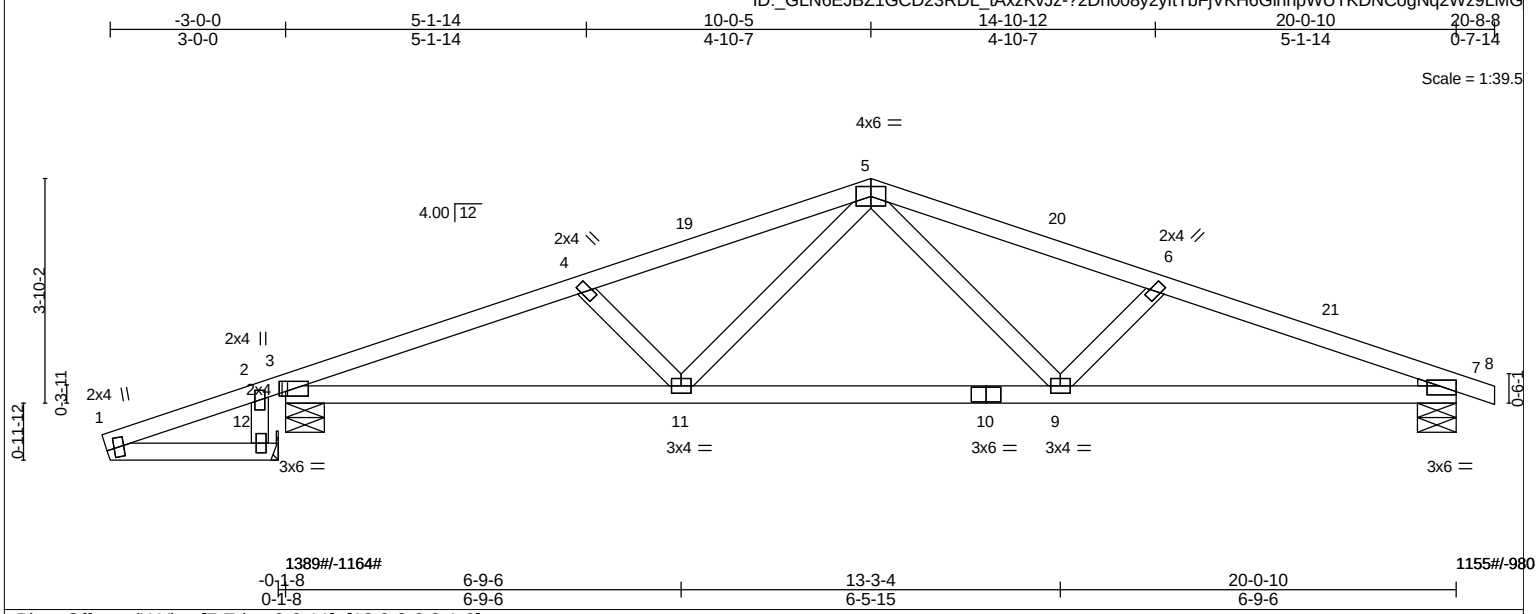

Plate Offsets (X,Y)-- [7:Edge,0-0-11], [12:0-2-0,0-1-0]

LOADING (psf)		**SPACING-**	2-0-0	**CSI.**		**DEFL.**	in	(loc)	l/defl	L/d	**PLATES**	**GRIP**
TCLL	30.0	Plate Grip DOL	1.33	TC	0.72	Vert(LL)	0.18	9-11	>999	360	MT20	244/190
TCDL	15.0	Lumber DOL	1.33	BC	0.69	Vert(CT)	-0.28	9-11	>870	180		
BCLL	0.0	Rep Stress Incr	YES	WB	0.22	Horz(CT)	0.06	7	n/a	n/a		
BCDL	10.0	Code FBC2020/TPI2014		Matrix-AS							Weight: 94 lb	FT = 0%

LUMBER-
TOP CHORD 2x4 SP No.2
BOT CHORD 2x4 SP No.2
WEBS 2x4 SP No.3
OTHERS 2x4 SP No.3
WEDGE
Right: 2x2 SP No.3

BRACING-
TOP CHORD Structural wood sheathing directly applied.
BOT CHORD Rigid ceiling directly applied.

MiTek recommends that Stabilizers and required cross bracing be installed during truss erection, in accordance with Stabilizer Installation guide.

REACTIONS. (lb/size) 3=1389/0-8-0 (min. 0-1-10), 12=-0/Mechanical, 7=1155/0-8-0 (min. 0-1-8)
Max Horz 3=-343(LC 4), 12=405(LC 4)
Max Uplift3=-1164(LC 4), 7=-980(LC 4)
Max Grav 3=1389(LC 1), 7=1155(LC 1)

FORCES. (lb) - Max. Comp./Max. Ten. - All forces 250 (lb) or less except when shown.
TOP CHORD 1-2=-376/333, 2-3=-376/351, 3-4=-2378/1847, 4-19=-2084/1676, 5-19=-2018/1685, 5-20=-2051/1736, 6-20=-2119/1727, 6-21=-2346/1915, 7-21=-2424/1901
BOT CHORD 3-11=-1591/2176, 10-11=-1093/1558, 9-10=-1093/1558, 7-9=-1665/2226
WEBS 5-9=-372/614, 6-9=-449/473, 5-11=-304/568, 4-11=-423/432, 1-12=-277/406

NOTES- (8-9)
1) Unbalanced roof live loads have been considered for this design.
2) Wind: ASCE 7-16; Vult=175mph (3-second gust) Vasd=136mph; HVHZ; TCDL=5.0psf; BCDL=5.0psf; h=28ft; Cat. II; Exp C; Encl., GCpi=0.18; C-C Exterior(2E) -3-1-3 to 0-3-7, Interior(1) 0-3-7 to 7-0-5, Exterior(2R) 7-0-5 to 13-0-5, Interior(1) 13-0-5 to 17-8-8, Exterior(2E) 17-8-8 to 20-8-8; Lumber DOL=1.60 plate grip DOL=1.60
3) Building Designer / Project engineer responsible for verifying applied roof live load shown covers rain loading requirements specific to the use of this truss component.
4) This truss has been designed for a 10.0 psf bottom chord live load nonconcurrent with any other live loads.
5) Refer to girder(s) for truss to truss connections.
6) Provide mechanical connection (by others) of truss to bearing plate capable of withstanding 1164 lb uplift at joint 3 and 980 lb uplift at joint 7.
7) This truss design requires that a minimum of 7/16" structural wood sheathing be applied directly to the top chord and 1/2" gypsum sheetrock be applied directly to the bottom chord.
8) All truss to truss connection by TCI are on the Truss Placement plan.
9) ARMANDO R. PEREZ PE. # 28026 Ph: (305) 882-8826

LOAD CASE(S) Standard

Job	Truss	Truss Type	Qty	Ply	12715 ROLLING ROAD DR, PINECREST, FL.
12715	T7B	Common	1	1	Job Reference (optional)

Trusscorp Int., 9590 NW 89 AVE, Medley, FL — 8.820 s Dec 4 2024 MiTek Industries, Inc. Thu Jun 5 12:44:31 2025 Page 1

ID:_GLN6EJBZ1GCD23RDL_tAxzKvJz-yRLSRi9CaZvaivO5dlJaLAs7GK9wo7qVG_sw6Pz9LME

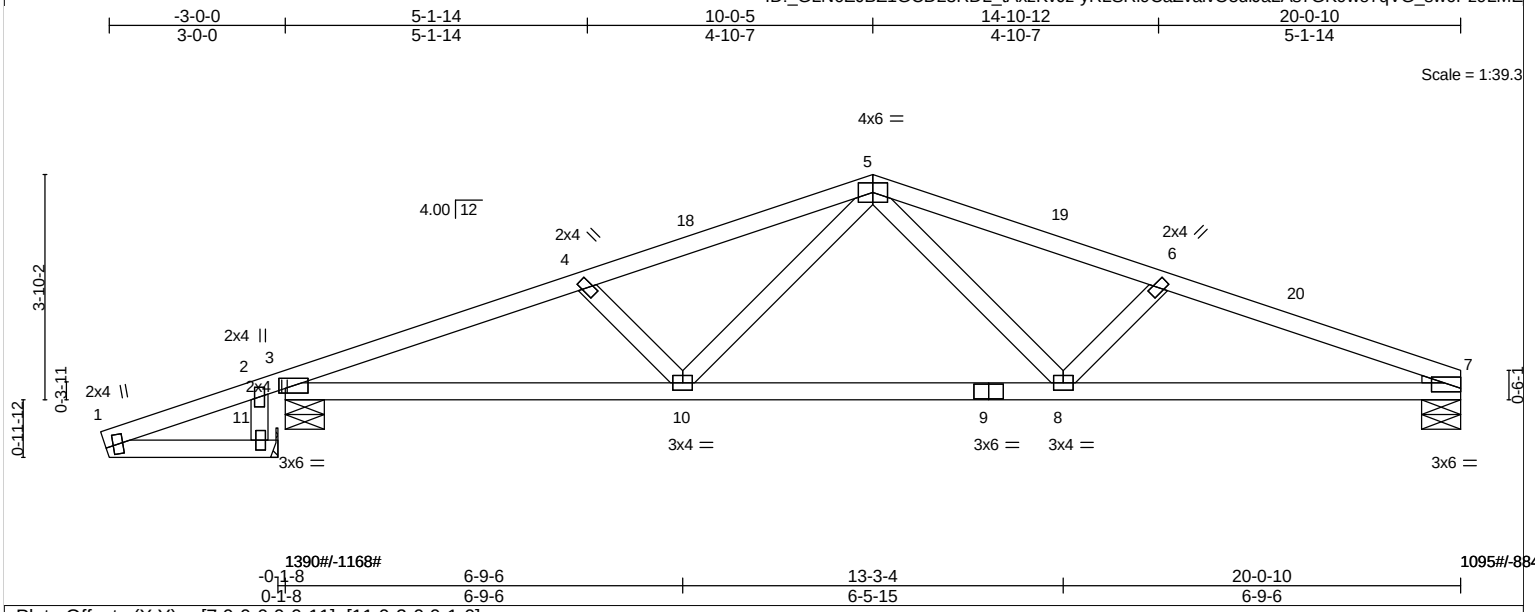

Plate Offsets (X,Y)-- [7:0-0-0,0-0-11], [11:0-2-0,0-1-0]

LOADING (psf)		**SPACING-**	2-0-0	**CSI.**		**DEFL.**	in	(loc)	l/defl	L/d	**PLATES**	**GRIP**
TCLL	30.0	Plate Grip DOL	1.33	TC	0.72	Vert(LL)	0.18	8-10	>999	360	MT20	244/190
TCDL	15.0	Lumber DOL	1.33	BC	0.69	Vert(CT)	-0.28	8-10	>874	180		
BCLL	0.0	Rep Stress Incr	YES	WB	0.22	Horz(CT)	0.06	7	n/a	n/a		
BCDL	10.0	Code FBC2020/TPI2014		Matrix-AS							Weight: 93 lb	FT = 0%

LUMBER-
TOP CHORD 2x4 SP No.2
BOT CHORD 2x4 SP No.2
WEBS 2x4 SP No.3
OTHERS 2x4 SP No.3
WEDGE
Right: 2x2 SP No.3

BRACING-
TOP CHORD Structural wood sheathing directly applied.
BOT CHORD Rigid ceiling directly applied.

MiTek recommends that Stabilizers and required cross bracing be installed during truss erection, in accordance with Stabilizer Installation guide.

REACTIONS. (lb/size) 7=1095/0-8-0 (min. 0-1-8), 3=1390/0-8-0 (min. 0-1-10), 11=-0/Mechanical
Max Horz 3=-310(LC 4), 11=405(LC 4)
Max Uplift7=-884(LC 4), 3=-1168(LC 4)
Max Grav 7=1095(LC 1), 3=1390(LC 1)

FORCES. (lb) - Max. Comp./Max. Ten. - All forces 250 (lb) or less except when shown.
TOP CHORD 1-2=-376/333, 2-3=-376/351, 3-4=-2381/1858, 4-18=-2086/1687, 5-18=-2020/1697, 5-19=-2058/1766, 6-19=-2126/1757, 6-20=-2355/1952, 7-20=-2433/1938
BOT CHORD 3-10=-1634/2179, 9-10=-1137/1561, 8-9=-1137/1561, 7-8=-1737/2235
WEBS 5-8=-396/620, 6-8=-453/491, 5-10=-302/568, 4-10=-423/432, 1-11=-277/406

NOTES- (8-9)
1) Unbalanced roof live loads have been considered for this design.
2) Wind: ASCE 7-16; Vult=175mph (3-second gust) Vasd=136mph; HVHZ; TCDL=5.0psf; BCDL=5.0psf; h=28ft; Cat. II; Exp C; Encl., GCpi=0.18; C-C Exterior(2E) -3-1-3 to 0-3-7, Interior(1) 0-3-7 to 7-0-5, Exterior(2R) 7-0-5 to 13-0-5, Interior(1) 13-0-5 to 17-0-10, Exterior(2E) 17-0-10 to 20-0-10; Lumber DOL=1.60 plate grip DOL=1.60
3) Building Designer / Project engineer responsible for verifying applied roof live load shown covers rain loading requirements specific to the use of this truss component.
4) This truss has been designed for a 10.0 psf bottom chord live load nonconcurrent with any other live loads.
5) Refer to girder(s) for truss to truss connections.
6) Provide mechanical connection (by others) of truss to bearing plate capable of withstanding 884 lb uplift at joint 7 and 1168 lb uplift at joint 3.
7) This truss design requires that a minimum of 7/16" structural wood sheathing be applied directly to the top chord and 1/2" gypsum sheetrock be applied directly to the bottom chord.
8) All truss to truss connection by TCI are on the Truss Placement plan.
9) ARMANDO R. PEREZ PE. # 28026 Ph: (305) 882-8826

LOAD CASE(S) Standard

Job	Truss	Truss Type	Qty	Ply	12715 ROLLING ROAD DR, PINECREST, FL.
12715	T8	Roof Special	6	1	Job Reference (optional)

Trusscorp Int., 9590 NW 89 AVE, Medley, FL

8.820 s Dec 4 2024 MiTek Industries, Inc. Thu Jun 5 12:44:33 2025 Page 1
ID:_GLN6EJBZ1GCD23RDL_tAxzKvJz-upTCsOBT6B9IyCYUkAM2RbyRa7mAGw4njIL1BIz9LMC

-3-0-0	1-11-11	3-8-0	7-3-8	10-0-5	12-9-2	16-4-10	18-0-15	20-0-10	23-0-10
3-0-0	1-11-11	1-8-5	3-7-8	2-8-13	2-8-13	3-7-8	1-8-5	1-11-11	3-0-0

Scale = 1:42.8

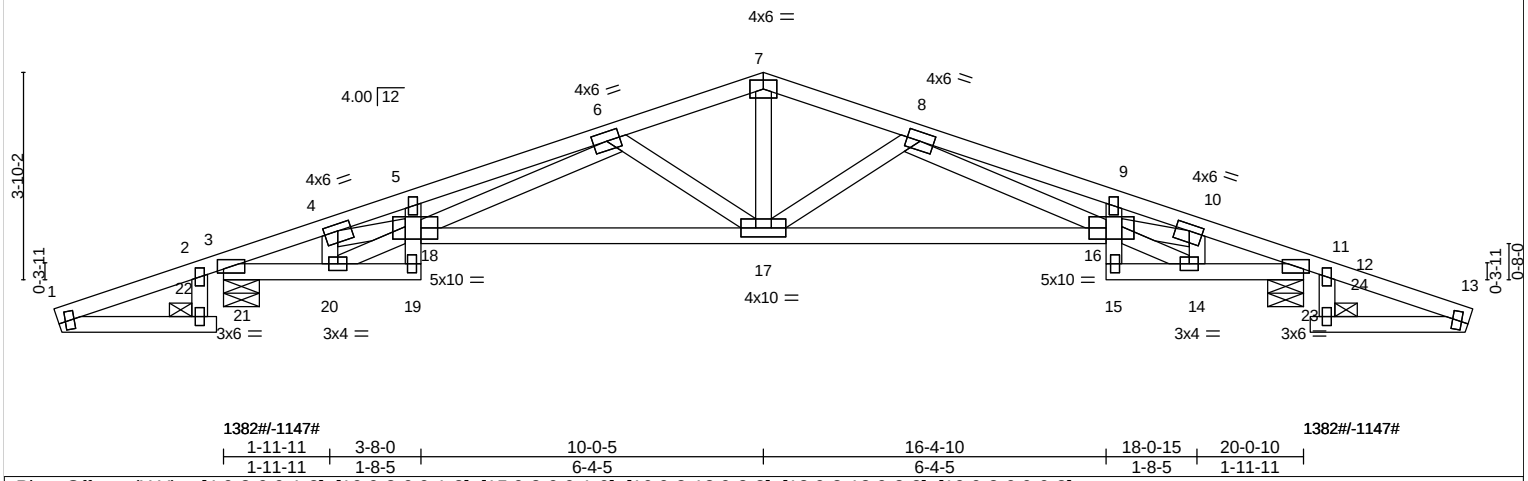

1382#/-1147# 1382#/-1147#

1-11-11	3-8-0	10-0-5	16-4-10	18-0-15	20-0-10
1-11-11	1-8-5	6-4-5	6-4-5	1-8-5	1-11-11

Plate Offsets (X,Y)-- [4:0-3-0,0-1-8], [10:0-3-0,0-1-8], [15:0-2-0,0-1-0], [16:0-3-12,0-2-8], [18:0-3-12,0-2-8], [19:0-2-0,0-0-8]

LOADING (psf)		**SPACING-**	2-0-0	**CSI.**		**DEFL.**	in	(loc)	l/defl	L/d	**PLATES**	**GRIP**
TCLL	30.0	Plate Grip DOL	1.33	TC	0.86	Vert(LL)	0.24	16-17	>999	360	MT20	244/190
TCDL	15.0	Lumber DOL	1.33	BC	0.96	Vert(CT)	-0.43	16-17	>554	180		
BCLL	0.0	Rep Stress Incr	YES	WB	0.69	Horz(CT)	0.17	11	n/a	n/a		
BCDL	10.0	Code FBC2020/TPI2014		Matrix-AS							Weight: 121 lb	FT = 0%

LUMBER-
TOP CHORD 2x4 SP No.2
BOT CHORD 2x4 SP No.2 *Except*
B2: 2x4 SP No.3
WEBS 2x4 SP No.3
OTHERS 2x4 SP No.3

BRACING-
TOP CHORD Structural wood sheathing directly applied.
BOT CHORD Rigid ceiling directly applied.
JOINTS 1 Brace at Jt(s): 22, 24

MiTek recommends that Stabilizers and required cross bracing be installed during truss erection, in accordance with Stabilizer Installation guide.

REACTIONS. (lb/size) 3=1382/0-8-0 (min. 0-1-10), 11=1382/0-8-0 (min. 0-1-10)
Max Uplift3=-1147(LC 4), 11=-1147(LC 4)

FORCES. (lb) - Max. Comp./Max. Ten. - All forces 250 (lb) or less except when shown.
TOP CHORD 3-4=-1657/921, 4-5=-3522/2266, 5-6=-3879/2534, 6-7=-1971/1513, 7-8=-1971/1513, 8-9=-3879/2534, 9-10=-3522/2266, 10-11=-1657/921
BOT CHORD 3-20=-647/1481, 19-20=-383/562, 5-18=-255/274, 17-18=-1539/2431, 16-17=-1539/2431, 9-16=-255/274, 14-15=-383/562, 11-14=-647/1481
WEBS 7-17=-672/1034, 8-17=-741/627, 10-14=-754/473, 18-20=-241/927, 4-20=-754/473, 4-18=-1353/1915, 14-16=-241/927, 10-16=-1353/1915, 6-17=-741/627, 6-18=-662/1385, 8-16=-662/1385

NOTES- (8-9)
1) Unbalanced roof live loads have been considered for this design.
2) Wind: ASCE 7-16; Vult=175mph (3-second gust) Vasd=136mph; HVHZ; TCDL=5.0psf; BCDL=5.0psf; h=28ft; Cat. II; Exp C; Encl., GCpi=0.18; C-C Exterior(2E) -3-1-3 to 0-3-7, Interior(1) 0-3-7 to 7-0-5, Exterior(2R) 7-0-5 to 12-10-0, Interior(1) 12-10-0 to 20-0-10, Exterior(2E) 20-0-10 to 23-1-13; Lumber DOL=1.60 plate grip DOL=1.60
3) Building Designer / Project engineer responsible for verifying applied roof live load shown covers rain loading requirements specific to the use of this truss component.
4) All plates are 2x4 MT20 unless otherwise indicated.
5) This truss has been designed for a 10.0 psf bottom chord live load nonconcurrent with any other live loads.
6) Provide mechanical connection (by others) of truss to bearing plate capable of withstanding 1147 lb uplift at joint 3 and 1147 lb uplift at joint 11.
7) This truss design requires that a minimum of 7/16" structural wood sheathing be applied directly to the top chord and 1/2" gypsum sheetrock be applied directly to the bottom chord.
8) All truss to truss connection by TCI are on the Truss Placement plan.
9) ARMANDO R. PEREZ PE. # 28026 Ph: (305) 882-8826

LOAD CASE(S) Standard

Job	Truss	Truss Type	Qty	Ply	12715 ROLLING ROAD DR, PINECREST, FL.
12715	T9T	COMMON	1	1	Job Reference (optional)

Trusscorp Int., 9590 NW 89 AVE, Medley, FL

8.820 s Dec 4 2024 MiTek Industries, Inc. Thu Jun 5 12:44:34 2025 Page 1
ID:_GLN6EJBZ1GCD23RDL_tAxzKvJz-M01a3kC5tUH9ZM7gIutHzoUbQXB1?UVxyy4bjkz9LMB

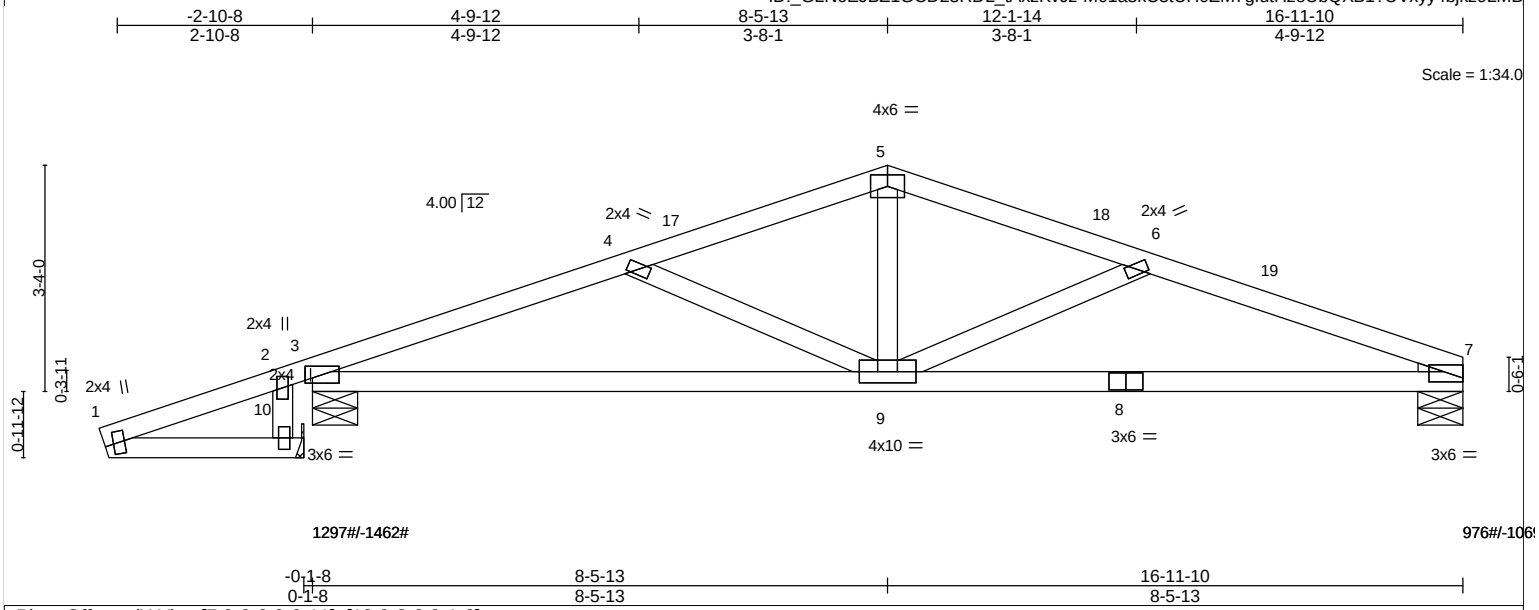

Plate Offsets (X,Y)-- [7:0-0-0,0-0-11], [10:0-2-0,0-1-0]

LOADING (psf)		**SPACING-**	2-0-0	**CSI.**		**DEFL.**	in	(loc)	l/defl	L/d	**PLATES**	**GRIP**
TCLL	30.0	Plate Grip DOL	1.33	TC	0.92	Vert(LL)	0.14	9-13	>999	360	MT20	244/190
TCDL	15.0	Lumber DOL	1.33	BC	0.66	Vert(CT)	-0.19	9-13	>999	180		
BCLL	0.0	Rep Stress Incr	YES	WB	0.23	Horz(CT)	0.04	7	n/a	n/a		
BCDL	10.0	Code FBC2020/TPI2014		Matrix-AS							Weight: 79 lb	FT = 0%

LUMBER-
TOP CHORD 2x4 SP No.2
BOT CHORD 2x4 SP No.2
WEBS 2x4 SP No.3
OTHERS 2x4 SP No.3
WEDGE
Right: 2x2 SP No.3

BRACING-
TOP CHORD Structural wood sheathing directly applied.
BOT CHORD Rigid ceiling directly applied.

MiTek recommends that Stabilizers and required cross bracing be installed during truss erection, in accordance with Stabilizer Installation guide.

REACTIONS. (lb/size) 7=923/0-8-0 (min. 0-1-8), 3=1222/0-8-0 (min. 0-1-8), 10=-0/Mechanical
Max Horz 3=-418(LC 4), 10=544(LC 4)
Max Uplift7=-1069(LC 4), 3=-1462(LC 4)
Max Grav 7=976(LC 5), 3=1297(LC 5)

FORCES. (lb) - Max. Comp./Max. Ten. - All forces 250 (lb) or less except when shown.
TOP CHORD 1-2=-505/320, 2-3=-507/337, 3-4=-1974/2175, 4-17=-1563/1716, 5-17=-1545/1725, 5-18=-1548/1731, 6-18=-1566/1722, 6-19=-2000/2280, 7-19=-2026/2267
BOT CHORD 3-9=-1898/1783, 8-9=-2021/1843, 7-8=-2021/1843
WEBS 5-9=-453/592, 6-9=-569/762, 4-9=-504/628, 1-10=-299/545

NOTES- (8-9)
1) Unbalanced roof live loads have been considered for this design.
2) Wind: ASCE 7-16; Vult=175mph (3-second gust) Vasd=136mph; HVHZ; TCDL=5.0psf; BCDL=5.0psf; h=28ft; Cat. II; Exp C; Part. Encl., GCpi=0.55; C-C Exterior(2E) -3-1-3 to 0-3-7, Interior(1) 0-3-7 to 5-5-13, Exterior(2R) 5-5-13 to 11-5-13, Interior(1) 11-5-13 to 13-11-10, Exterior(2E) 13-11-10 to 16-11-10; Lumber DOL=1.60 plate grip DOL=1.60
3) Building Designer / Project engineer responsible for verifying applied roof live load shown covers rain loading requirements specific to the use of this truss component.
4) This truss has been designed for a 10.0 psf bottom chord live load nonconcurrent with any other live loads.
5) Refer to girder(s) for truss to truss connections.
6) Provide mechanical connection (by others) of truss to bearing plate capable of withstanding 1069 lb uplift at joint 7 and 1462 lb uplift at joint 3.
7) This truss design requires that a minimum of 7/16" structural wood sheathing be applied directly to the top chord and 1/2" gypsum sheetrock be applied directly to the bottom chord.
8) All truss to truss connection by TCI are on the Truss Placement plan.
9) ARMANDO R. PEREZ PE. # 28026 Ph: (305) 882-8826

LOAD CASE(S) Standard

Job	Truss	Truss Type	Qty	Ply	12715 ROLLING ROAD DR, PINECREST, FL.
12715	T10	COMMON	1	1	Job Reference (optional)

Trusscorp Int., 9590 NW 89 AVE, Medley, FL

8.820 s Dec 4 2024 MiTek Industries, Inc. Thu Jun 5 12:44:36 2025 Page 1
ID:_GLN6EJBZ1GCD23RDL_tAxzKvJz-IO8LUQDLP6XtpgH3PIvl2Da1hLwYTIKEPGZhocz9LM9

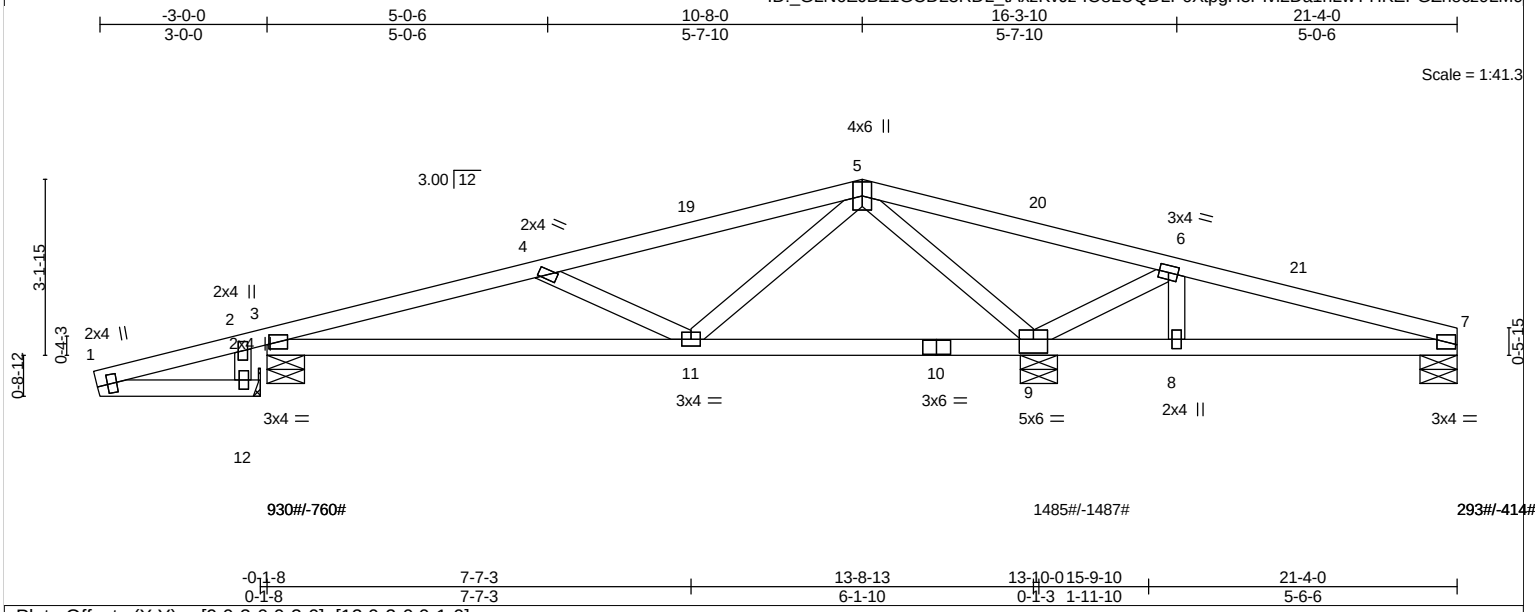

Plate Offsets (X,Y)-- [9:0-3-0,0-3-0], [12:0-2-0,0-1-0]

LOADING (psf)		**SPACING-**	2-0-0	**CSI.**		**DEFL.**	in	(loc)	l/defl	L/d	**PLATES**	**GRIP**
TCLL	30.0	Plate Grip DOL	1.33	TC	0.55	Vert(LL)	0.06	8-15	>999	360	MT20	244/190
TCDL	15.0	Lumber DOL	1.33	BC	0.47	Vert(CT)	-0.12	11-18	>999	180		
BCLL	0.0	Rep Stress Incr	YES	WB	0.52	Horz(CT)	0.02	9	n/a	n/a		
BCDL	10.0	Code FBC2020/TPI2014		Matrix-AS							Weight: 97 lb	FT = 0%

LUMBER-
TOP CHORD 2x4 SP No.2
BOT CHORD 2x4 SP No.2
WEBS 2x4 SP No.3
OTHERS 2x4 SP No.3

BRACING-
TOP CHORD Structural wood sheathing directly applied.
BOT CHORD Rigid ceiling directly applied.

MiTek recommends that Stabilizers and required cross bracing be installed during truss erection, in accordance with Stabilizer Installation guide.

REACTIONS. (lb/size) 7=208/0-8-0 (min. 0-1-8), 3=930/0-8-0 (min. 0-1-8), 9=1485/0-8-0 (min. 0-1-12), 12=0/Mechanical
Max Horz 3=-403(LC 4), 12=474(LC 4)
Max Uplift7=-414(LC 4), 3=-760(LC 4), 9=-1487(LC 4)
Max Grav 7=293(LC 10), 3=930(LC 1), 9=1485(LC 1)

FORCES. (lb) - Max. Comp./Max. Ten. - All forces 250 (lb) or less except when shown.
TOP CHORD 1-2=-452/377, 2-3=-453/392, 3-4=-1392/989, 4-19=-772/487, 5-19=-708/494, 5-20=-670/869, 6-20=-677/758, 6-21=-226/317, 7-21=-307/310
BOT CHORD 3-11=-874/1304, 8-9=-275/272, 7-8=-275/272
WEBS 4-11=-702/672, 5-11=-300/637, 5-9=-1396/1246, 6-9=-893/1265, 6-8=-321/150, 1-12=-335/475

NOTES- (8-9)
1) Unbalanced roof live loads have been considered for this design.
2) Wind: ASCE 7-16; Vult=175mph (3-second gust) Vasd=136mph; HVHZ; TCDL=5.0psf; BCDL=5.0psf; h=28ft; Cat. II; Exp C; Encl., GCpi=0.18; C-C Exterior(2E) -3-0-15 to 0-0-0, Interior(1) 0-0-0 to 7-8-0, Exterior(2R) 7-8-0 to 13-8-0, Interior(1) 13-8-0 to 18-4-0, Exterior(2E) 18-4-0 to 21-4-0; porch right exposed; Lumber DOL=1.60 plate grip DOL=1.60
3) Building Designer / Project engineer responsible for verifying applied roof live load shown covers rain loading requirements specific to the use of this truss component.
4) This truss has been designed for a 10.0 psf bottom chord live load nonconcurrent with any other live loads.
5) Refer to girder(s) for truss to truss connections.
6) Provide mechanical connection (by others) of truss to bearing plate capable of withstanding 414 lb uplift at joint 7, 760 lb uplift at joint 3 and 1487 lb uplift at joint 9.
7) This truss design requires that a minimum of 7/16" structural wood sheathing be applied directly to the top chord and 1/2" gypsum sheetrock be applied directly to the bottom chord.
8) All truss to truss connection by TCI are on the Truss Placement plan.
9) ARMANDO R. PEREZ PE. # 28026 Ph: (305) 882-8826

LOAD CASE(S) Standard

Job	Truss	Truss Type	Qty	Ply	12715 ROLLING ROAD DR, PINECREST, FL.
12715	T10T	COMMON	1	1	Job Reference (optional)

Trusscorp Int., 9590 NW 89 AVE, Medley, FL

8.820 s Dec 4 2024 MiTek Industries, Inc. Thu Jun 5 12:44:38 2025 Page 1
ID:_GLN6EJBZ1GCD23RDL_tAxzKvJz-FnG5v5FbxjnB2zRRXjxD8efJv8YkxHUWta2osVz9LM7

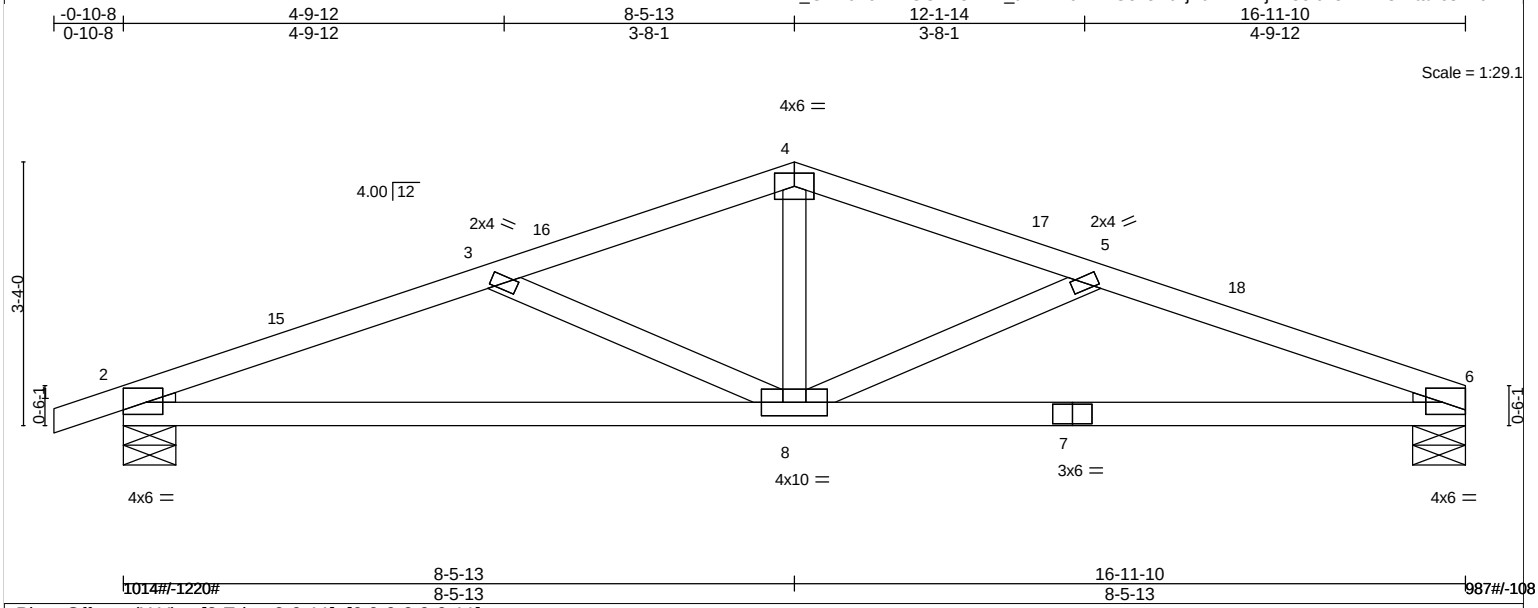

Plate Offsets (X,Y)-- [2:Edge,0-0-11], [6:0-0-0,0-0-11]

LOADING (psf)		**SPACING-**	2-0-0	**CSI.**		**DEFL.**	in	(loc)	l/defl	L/d	**PLATES**	**GRIP**
TCLL	30.0	Plate Grip DOL	1.33	TC	0.82	Vert(LL)	0.14	8	>999	360	MT20	244/190
TCDL	15.0	Lumber DOL	1.33	BC	0.68	Vert(CT)	-0.19	8-11	>999	180		
BCLL	0.0	Rep Stress Incr	YES	WB	0.23	Horz(CT)	0.04	6	n/a	n/a		
BCDL	10.0	Code FBC2020/TPI2014		Matrix-AS							Weight: 70 lb	FT = 0%

LUMBER-
TOP CHORD 2x4 SP No.2
BOT CHORD 2x4 SP No.2
WEBS 2x4 SP No.3
WEDGE
Left: 2x2 SP No.3 , Right: 2x2 SP No.3

BRACING-
TOP CHORD Structural wood sheathing directly applied.
BOT CHORD Rigid ceiling directly applied.

MiTek recommends that Stabilizers and required cross bracing be installed during truss erection, in accordance with Stabilizer Installation guide.

REACTIONS. (lb/size) 6=931/0-8-0 (min. 0-1-8), 2=1014/0-8-0 (min. 0-1-8)
Max Horz 2=43(LC 4)
Max Uplift6=-1083(LC 4), 2=-1220(LC 4)
Max Grav 6=987(LC 5), 2=1014(LC 1)

FORCES. (lb) - Max. Comp./Max. Ten. - All forces 250 (lb) or less except when shown.
TOP CHORD 2-15=-2059/2269, 3-15=-2036/2282, 3-16=-1602/1764, 4-16=-1584/1774, 4-17=-1584/1776, 5-17=-1602/1766, 5-18=-2034/2322, 6-18=-2060/2309
BOT CHORD 2-8=-2013/1874, 7-8=-2060/1874, 6-7=-2060/1874
WEBS 4-8=-495/626, 5-8=-567/759, 3-8=-566/708

NOTES- (7-8)
1) Unbalanced roof live loads have been considered for this design.
2) Wind: ASCE 7-16; Vult=175mph (3-second gust) Vasd=136mph; HVHZ; TCDL=5.0psf; BCDL=5.0psf; h=28ft; Cat. II; Exp C; Part. Encl., GCpi=0.55; C-C Exterior(2E) -0-10-8 to 2-1-8, Interior(1) 2-1-8 to 5-5-13, Exterior(2R) 5-5-13 to 11-5-13, Interior(1) 11-5-13 to 13-11-10, Exterior(2E) 13-11-10 to 16-11-10; Lumber DOL=1.60 plate grip DOL=1.60
3) Building Designer / Project engineer responsible for verifying applied roof live load shown covers rain loading requirements specific to the use of this truss component.
4) This truss has been designed for a 10.0 psf bottom chord live load nonconcurrent with any other live loads.
5) Provide mechanical connection (by others) of truss to bearing plate capable of withstanding 1083 lb uplift at joint 6 and 1220 lb uplift at joint 2.
6) This truss design requires that a minimum of 7/16" structural wood sheathing be applied directly to the top chord and 1/2" gypsum sheetrock be applied directly to the bottom chord.
7) All truss to truss connection by TCI are on the Truss Placement plan.
8) ARMANDO R. PEREZ PE. # 28026 Ph: (305) 882-8826

LOAD CASE(S) Standard

Job	Truss	Truss Type	Qty	Ply	12715 ROLLING ROAD DR, PINECREST, FL.
12715	T11	COMMON	1	1	Job Reference (optional)

Trusscorp Int., 9590 NW 89 AVE, Medley, FL

8.820 s Dec 4 2024 MiTek Industries, Inc. Thu Jun 5 12:44:40 2025 Page 1
ID:_GLN6EJBZ1GCD23RDL_tAxzKvJz-BAOrKnGsSK1JHHaqe8_iD3kinyH1P6GpKuXvxOz9LM5

-3-0-0	5-0-6	10-8-0	16-3-10	21-4-0	23-4-0
3-0-0	5-0-6	5-7-10	5-7-10	5-0-6	2-0-0

Scale = 1:46.1

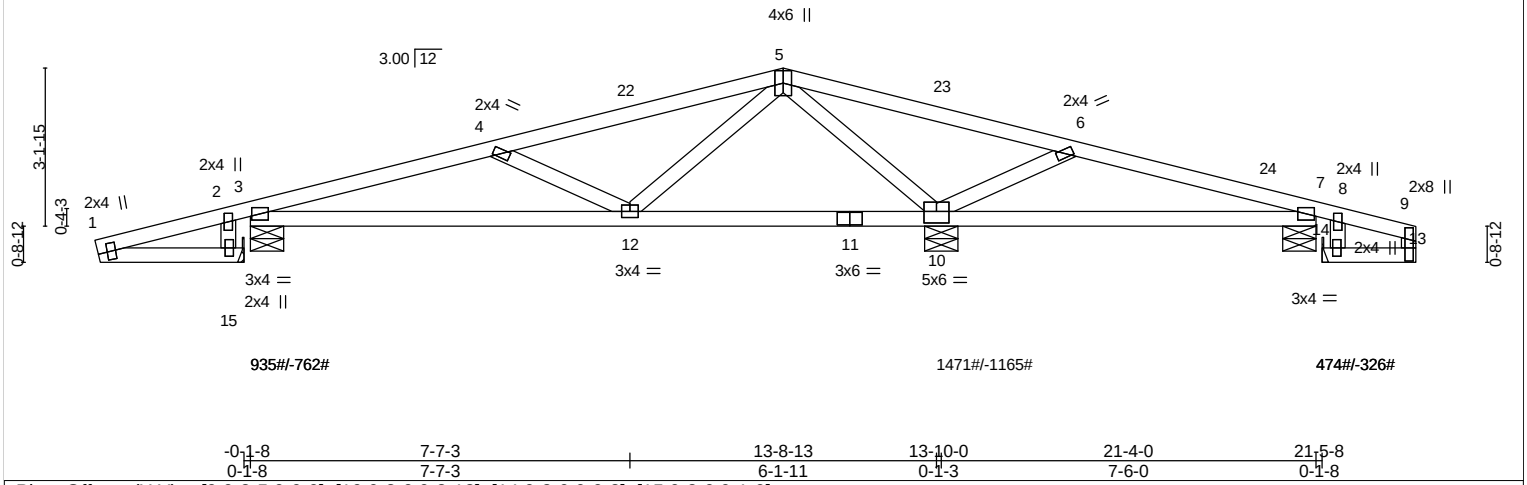

-0-1-8	7-7-3	13-8-13	13-10-0	21-4-0	21-5-8
0-1-8	7-7-3	6-1-11	0-1-3	7-6-0	0-1-8

Plate Offsets (X,Y)-- [9:0-3-5,0-0-9], [10:0-3-0,0-2-12], [14:0-2-0,0-0-8], [15:0-2-0,0-1-0]

LOADING (psf)		**SPACING-**	2-0-0	**CSI.**		**DEFL.**	in	(loc)	l/defl	L/d	**PLATES**	**GRIP**
TCLL	30.0	Plate Grip DOL	1.33	TC	0.54	Vert(LL)	-0.06	10-21	>999	360	MT20	244/190
TCDL	15.0	Lumber DOL	1.33	BC	0.50	Vert(CT)	-0.13	12-18	>999	180		
BCLL	0.0	Rep Stress Incr	YES	WB	0.53	Horz(CT)	0.02	10	n/a	n/a		
BCDL	10.0	Code FBC2020/TPI2014		Matrix-AS							Weight: 102 lb	FT = 0%

LUMBER-
TOP CHORD 2x4 SP No.2
BOT CHORD 2x4 SP No.2
WEBS 2x4 SP No.3
OTHERS 2x4 SP No.3

BRACING-
TOP CHORD Structural wood sheathing directly applied.
BOT CHORD Rigid ceiling directly applied.

MiTek recommends that Stabilizers and required cross bracing be installed during truss erection, in accordance with Stabilizer Installation guide.

REACTIONS. (lb/size) 3=928/0-8-0 (min. 0-1-8), 10=1471/0-8-0 (min. 0-1-12), 14=0/Mechanical, 15=-0/Mechanical, 7=392/0-8-0 (min. 0-1-8)
Max Horz 3=-446(LC 4), 15=475(LC 4)
Max Uplift3=-762(LC 4), 10=-1165(LC 4), 7=-326(LC 4)
Max Grav 3=935(LC 9), 10=1471(LC 1), 7=474(LC 10)

FORCES. (lb) - Max. Comp./Max. Ten. - All forces 250 (lb) or less except when shown.
TOP CHORD 1-2=-453/375, 2-3=-454/390, 3-4=-1408/995, 4-22=-780/500, 5-22=-713/507, 5-23=-702/878, 6-23=-710/813, 6-24=-149/326, 7-24=-236/300
BOT CHORD 3-12=-837/1319, 7-10=-292/257
WEBS 4-12=-702/662, 5-12=-304/618, 5-10=-1406/1296, 1-15=-333/475, 6-10=-798/747

NOTES- (8-9)
1) Unbalanced roof live loads have been considered for this design.
2) Wind: ASCE 7-16; Vult=175mph (3-second gust) Vasd=136mph; HVHZ; TCDL=5.0psf; BCDL=5.0psf; h=28ft; Cat. II; Exp C; Encl., GCpi=0.18; C-C Exterior(2E) -3-0-15 to 0-0-0, Interior(1) 0-0-0 to 7-8-0, Exterior(2R) 7-8-0 to 13-8-0, Interior(1) 13-8-0 to 20-2-4, Exterior(2E) 20-2-4 to 23-2-4; porch right exposed; Lumber DOL=1.60 plate grip DOL=1.60
3) Building Designer / Project engineer responsible for verifying applied roof live load shown covers rain loading requirements specific to the use of this truss component.
4) This truss has been designed for a 10.0 psf bottom chord live load nonconcurrent with any other live loads.
5) Refer to girder(s) for truss to truss connections.
6) Provide mechanical connection (by others) of truss to bearing plate capable of withstanding 762 lb uplift at joint 3, 1165 lb uplift at joint 10 and 326 lb uplift at joint 7.
7) This truss design requires that a minimum of 7/16" structural wood sheathing be applied directly to the top chord and 1/2" gypsum sheetrock be applied directly to the bottom chord.
8) All truss to truss connection by TCI are on the Truss Placement plan.
9) ARMANDO R. PEREZ PE. # 28026 Ph: (305) 882-8826

LOAD CASE(S) Standard

Job	Truss	Truss Type	Qty	Ply	12715 ROLLING ROAD DR, PINECREST, FL.
12715	T12	COMMON	3	1	Job Reference (optional)

Trusscorp Int., 9590 NW 89 AVE, Medley, FL

8.820 s Dec 4 2024 MiTek Industries, Inc. Thu Jun 5 12:44:41 2025 Page 1
ID:_GLN6EJBZ1GCD23RDL_tAxzKvJz-fMyEX7HUDe9AvR90CsVxlHHnkMXg8VMzZYHSTqz9LM4

-3-0-0	6-4-15	12-6-0	18-7-1	25-0-0	28-0-0
3-0-0	6-4-15	6-1-1	6-1-1	6-4-15	3-0-0

Scale = 1:51.5

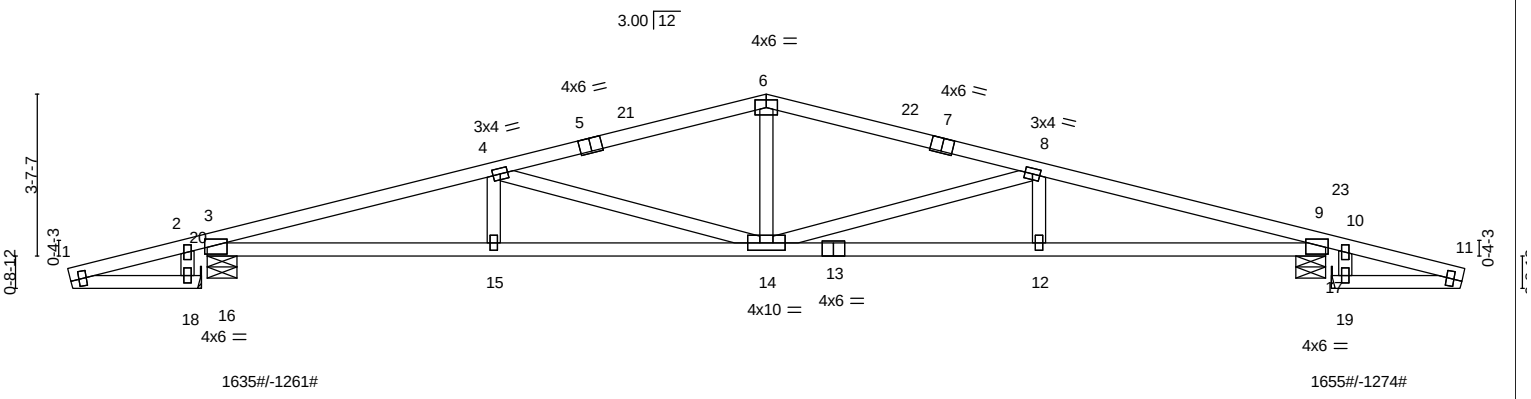

-0-1-8	6-4-15	12-6-0	18-7-1	25-0-0	25-1-8
0-1-8	6-4-15	6-1-1	6-1-1	6-4-15	0-1-8

Plate Offsets (X,Y)-- [3:0-3-0,0-2-6], [5:0-3-0,Edge], [7:0-3-0,Edge], [9:0-3-0,0-2-6]

LOADING (psf)		**SPACING-**	2-0-0	**CSI.**		**DEFL.**	in	(loc)	l/defl	L/d	**PLATES**	**GRIP**
TCLL	30.0	Plate Grip DOL	1.33	TC	0.91	Vert(LL)	0.27	12-14	>999	360	MT20	244/190
TCDL	15.0	Lumber DOL	1.33	BC	0.86	Vert(CT)	-0.43	12-14	>673	180		
BCLL	0.0	Rep Stress Incr	YES	WB	0.79	Horz(CT)	0.11	9	n/a	n/a		
BCDL	10.0	Code FBC2020/TPI2014		Matrix-S							Weight: 122 lb	FT = 0%

LUMBER-
TOP CHORD 2x4 SP No.2 *Except*
T3: 2x4 SP No.1
BOT CHORD 2x4 SP No.2 *Except*
B1: 2x4 SP No.1
WEBS 2x4 SP No.3
OTHERS 2x4 SP No.3

BRACING-
TOP CHORD Structural wood sheathing directly applied.
BOT CHORD Rigid ceiling directly applied or 3-9-14 oc bracing.

MiTek recommends that Stabilizers and required cross bracing be installed during truss erection, in accordance with Stabilizer Installation guide.

REACTIONS. (lb/size) 3=1635/0-8-0 (min. 0-1-15), 16=-0/Mechanical, 17=0/Mechanical, 9=1655/0-8-0 (min. 0-1-15)
Max Horz 3=462(LC 9), 16=353(LC 4), 17=-213(LC 9)
Max Uplift3=-1261(LC 4), 9=-1274(LC 4)
Max Grav 3=1635(LC 1), 9=1655(LC 1)

FORCES. (lb) - Max. Comp./Max. Ten. - All forces 250 (lb) or less except when shown.
TOP CHORD 1-2=-337/296, 2-20=-251/220, 3-20=-251/214, 3-4=-3498/2427, 4-5=-2527/1886, 5-21=-2459/1888, 6-21=-2457/1895, 6-22=-2457/1894, 7-22=-2458/1887, 7-8=-2525/1884, 8-9=-3408/2364
BOT CHORD 3-15=-2286/3159, 14-15=-2286/3159, 13-14=-2219/3063, 12-13=-2219/3063, 9-12=-2219/3063
WEBS 6-14=-334/659, 8-14=-956/602, 4-14=-1035/672, 1-18=-250/354, 16-18=-249/353

NOTES- (8-9)
1) Unbalanced roof live loads have been considered for this design.
2) Wind: ASCE 7-16; Vult=175mph (3-second gust) Vasd=136mph; HVHZ; TCDL=5.0psf; BCDL=5.0psf; h=28ft; Cat. II; Exp C; Encl., GCpi=0.18; C-C Exterior(2E) -3-0-15 to -0-0-15, Interior(1) -0-0-15 to 9-6-0, Exterior(2R) 9-6-0 to 15-6-0, Interior(1) 15-6-0 to 25-0-15 , Exterior(2E) 25-0-15 to 28-0-15; Lumber DOL=1.60 plate grip DOL=1.60
3) Building Designer / Project engineer responsible for verifying applied roof live load shown covers rain loading requirements specific to the use of this truss component.
4) All plates are 2x4 MT20 unless otherwise indicated.
5) This truss has been designed for a 10.0 psf bottom chord live load nonconcurrent with any other live loads.
6) Refer to girder(s) for truss to truss connections.
7) Provide mechanical connection (by others) of truss to bearing plate capable of withstanding 1261 lb uplift at joint 3 and 1274 lb uplift at joint 9.
8) All truss to truss connection by TCI are on the Truss Placement plan.
9) ARMANDO R. PEREZ PE. # 28026 Ph: (305) 882-8826

LOAD CASE(S) Standard

Job	Truss	Truss Type	Qty	Ply	12715 ROLLING ROAD DR, PINECREST, FL.
12715	T12T	COMMON	1	1	Job Reference (optional)

Trusscorp Int., 9590 NW 89 AVE, Medley, FL

8.820 s Dec 4 2024 MiTek Industries, Inc. Thu Jun 5 12:44:42 2025 Page 1
ID:_GLN6EJBZ1GCD23RDL_tAxzKvJz-7YWclTI6_yH1XbkDmZ0AIUqxVmtztyc6oC00?Gz9LM3

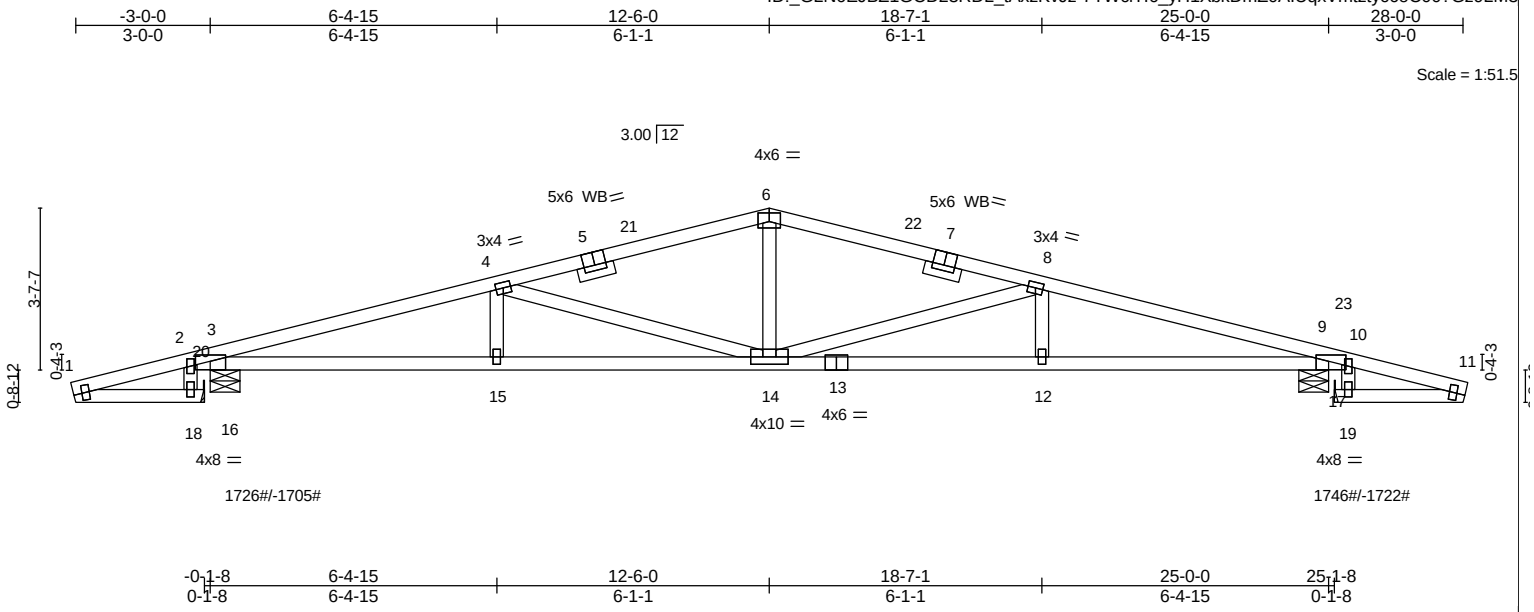

Plate Offsets (X,Y)-- [3:0-4-2,Edge], [5:0-3-0,Edge], [6:0-3-0,0-2-4], [7:0-3-0,Edge], [9:0-3-6,Edge]

LOADING (psf)		**SPACING-**	2-0-0	**CSI.**		**DEFL.**	in	(loc)	l/defl	L/d	**PLATES**	**GRIP**
TCLL	30.0	Plate Grip DOL	1.33	TC	0.98	Vert(LL)	0.33	12-14	>873	360	MT20	244/190
TCDL	15.0	Lumber DOL	1.33	BC	0.85	Vert(CT)	-0.42	12-14	>690	180		
BCLL	0.0	Rep Stress Incr	YES	WB	0.79	Horz(CT)	0.11	9	n/a	n/a		
BCDL	10.0	Code FBC2020/TPI2014		Matrix-S							Weight: 125 lb	FT = 0%

LUMBER-
TOP CHORD 2x4 SP No.1 *Except*
T2: 2x4 SP No.2
BOT CHORD 2x4 SP No.2 *Except*
B1: 2x4 SP No.1
WEBS 2x4 SP No.3
OTHERS 2x4 SP No.3

BRACING-
TOP CHORD Structural wood sheathing directly applied.
BOT CHORD Rigid ceiling directly applied or 3-1-6 oc bracing.

MiTek recommends that Stabilizers and required cross bracing be installed during truss erection, in accordance with Stabilizer Installation guide.

REACTIONS. (lb/size) 3=1635/0-8-0 (min. 0-2-1), 16=0/Mechanical, 17=0/Mechanical, 9=1655/0-8-0 (min. 0-2-1)
Max Horz 3=454(LC 9), 16=429(LC 4), 17=-212(LC 9)
Max Uplift3=-1705(LC 4), 9=-1722(LC 4)
Max Grav 3=1726(LC 5), 9=1746(LC 5)

FORCES. (lb) - Max. Comp./Max. Ten. - All forces 250 (lb) or less except when shown.
TOP CHORD 1-2=-410/289, 2-20=-299/213, 3-20=-299/206, 3-4=-3633/3315, 4-5=-2672/2547, 5-21=-2650/2550, 6-21=-2649/2557, 6-22=-2648/2555, 7-22=-2648/2548, 7-8=-2670/2545, 8-9=-3536/3221
BOT CHORD 3-15=-3093/3253, 14-15=-3093/3253, 13-14=-2994/3150, 12-13=-2994/3150, 9-12=-2994/3150
WEBS 6-14=-487/720, 8-14=-951/837, 4-14=-1040/940, 1-18=-242/430, 16-18=-242/429

NOTES- (8-9)
1) Unbalanced roof live loads have been considered for this design.
2) Wind: ASCE 7-16; Vult=175mph (3-second gust) Vasd=136mph; HVHZ; TCDL=5.0psf; BCDL=5.0psf; h=28ft; Cat. II; Exp C; Part. Encl., GCpi=0.55; C-C Exterior(2E) -3-0-15 to -0-0-15, Interior(1) -0-0-15 to 9-6-0, Exterior(2R) 9-6-0 to 15-6-0, Interior(1) 15-6-0 to 25-0-15, Exterior(2E) 25-0-15 to 28-0-15; Lumber DOL=1.60 plate grip DOL=1.60
3) Building Designer / Project engineer responsible for verifying applied roof live load shown covers rain loading requirements specific to the use of this truss component.
4) All plates are 2x4 MT20 unless otherwise indicated.
5) This truss has been designed for a 10.0 psf bottom chord live load nonconcurrent with any other live loads.
6) Refer to girder(s) for truss to truss connections.
7) Provide mechanical connection (by others) of truss to bearing plate capable of withstanding 1705 lb uplift at joint 3 and 1722 lb uplift at joint 9.
8) All truss to truss connection by TCI are on the Truss Placement plan.
9) ARMANDO R. PEREZ PE. # 28026 Ph: (305) 882-8826

LOAD CASE(S) Standard

Job	Truss	Truss Type	Qty	Ply	12715 ROLLING ROAD DR, PINECREST, FL.
12715	T13	COMMON	1	1	Job Reference (optional)

Trusscorp Int., 9590 NW 89 AVE, Medley, FL

8.820 s Dec 4 2024 MiTek Industries, Inc. Thu Jun 5 12:44:44 2025 Page 1
ID:_GLN6EJBZ1GCD23RDL_tAxzKvJz-3xdMA9JMWZYkmuubt_2eNvvJuZYlLrAPFVV649z9LM1

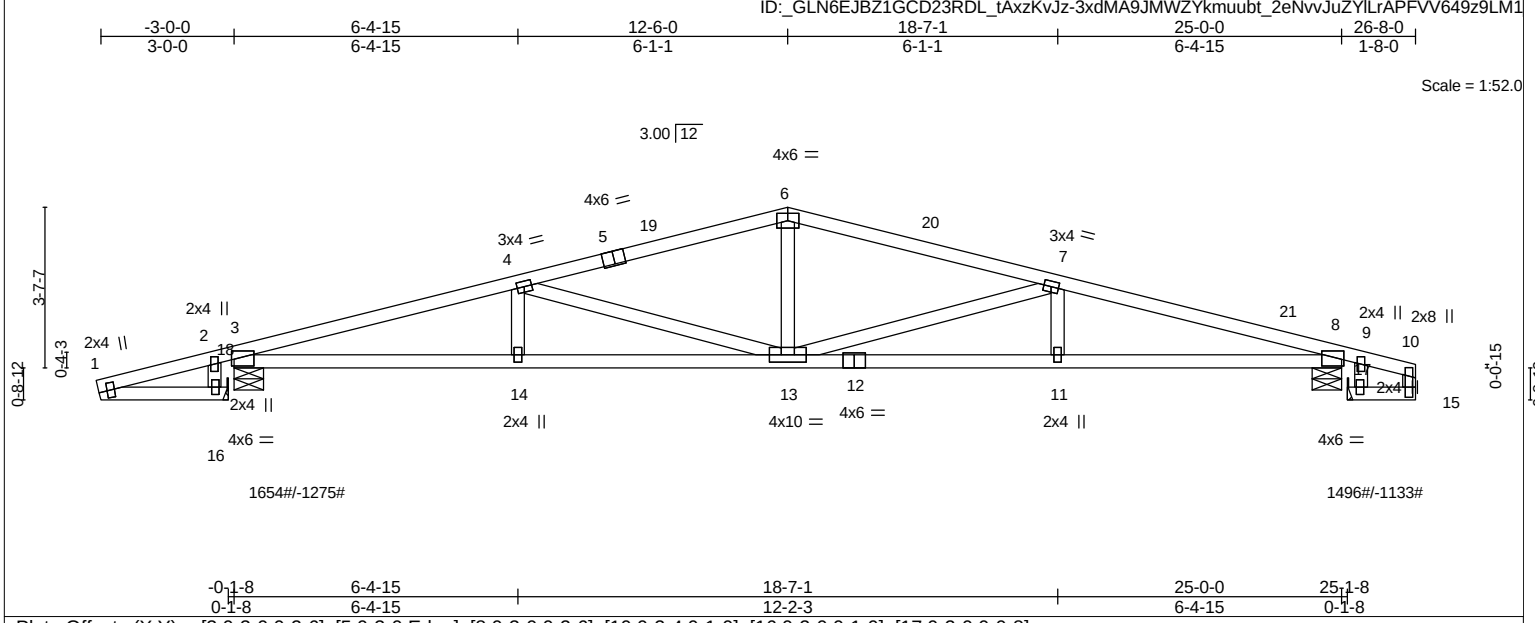

-0-1-8 6-4-15 18-7-1 25-0-0 25-1-8
0-1-8 6-4-15 12-2-3 6-4-15 0-1-8

Plate Offsets (X,Y)-- [3:0-3-0,0-2-6], [5:0-3-0,Edge], [8:0-3-0,0-2-6], [10:0-2-4,0-1-0], [16:0-2-0,0-1-0], [17:0-2-0,0-0-8]

LOADING (psf)		**SPACING-**	2-0-0	**CSI.**		**DEFL.**	in	(loc)	l/defl	L/d	**PLATES**	**GRIP**
TCLL	30.0	Plate Grip DOL	1.33	TC	0.85	Vert(LL)	0.28	11-13	>999	360	MT20	244/190
TCDL	15.0	Lumber DOL	1.33	BC	0.90	Vert(CT)	-0.46	11-13	>632	180		
BCLL	0.0	Rep Stress Incr	YES	WB	0.85	Horz(CT)	0.12	8	n/a	n/a		
BCDL	10.0	Code FBC2020/TPI2014		Matrix-S							Weight: 119 lb	FT = 0%

LUMBER-
TOP CHORD 2x4 SP No.2
BOT CHORD 2x4 SP No.2 *Except*
B1: 2x4 SP No.1
WEBS 2x4 SP No.3
OTHERS 2x4 SP No.3

BRACING-
TOP CHORD Structural wood sheathing directly applied or 2-2-0 oc purlins.
BOT CHORD Rigid ceiling directly applied or 3-9-2 oc bracing.

MiTek recommends that Stabilizers and required cross bracing be installed during truss erection, in accordance with Stabilizer Installation guide.

REACTIONS. (lb/size) 3=1654/0-8-0 (min. 0-1-15), 16=0/Mechanical, 8=1496/0-8-0 (min. 0-1-12), 17=0/Mechanical
Max Horz 3=-315(LC 4), 16=352(LC 4)
Max Uplift3=-1275(LC 4), 8=-1133(LC 4)
Max Grav 3=1654(LC 1), 8=1496(LC 1)

FORCES. (lb) - Max. Comp./Max. Ten. - All forces 250 (lb) or less except when shown.
TOP CHORD 1-2=-336/289, 3-4=-3561/2479, 4-5=-2591/1935, 5-19=-2524/1937, 6-19=-2522/1945, 6-20=-2522/1946, 7-20=-2592/1938, 7-21=-3572/2546, 8-21=-3645/2531
BOT CHORD 3-14=-2258/3337, 13-14=-2258/3337, 12-13=-2329/3425, 11-12=-2329/3425, 8-11=-2329/3425
WEBS 6-13=-368/705, 7-13=-1112/748, 4-13=-1030/674, 1-16=-242/352

NOTES- (7-8)
1) Unbalanced roof live loads have been considered for this design.
2) Wind: ASCE 7-16; Vult=175mph (3-second gust) Vasd=136mph; HVHZ; TCDL=5.0psf; BCDL=5.0psf; h=28ft; Cat. II; Exp C; Encl., GCpi=0.18; C-C Exterior(2E) -3-0-15 to -0-0-15, Interior(1) -0-0-15 to 9-6-0, Exterior(2R) 9-6-0 to 15-6-0, Interior(1) 15-6-0 to 23-6-4, Exterior(2E) 23-6-4 to 26-6-4; Lumber DOL=1.60 plate grip DOL=1.60
3) Building Designer / Project engineer responsible for verifying applied roof live load shown covers rain loading requirements specific to the use of this truss component.
4) This truss has been designed for a 10.0 psf bottom chord live load nonconcurrent with any other live loads.
5) Refer to girder(s) for truss to truss connections.
6) Provide mechanical connection (by others) of truss to bearing plate capable of withstanding 1275 lb uplift at joint 3 and 1133 lb uplift at joint 8.
7) All truss to truss connection by TCI are on the Truss Placement plan.
8) ARMANDO R. PEREZ PE. # 28026 Ph: (305) 882-8826

LOAD CASE(S) Standard

Job	Truss	Truss Type	Qty	Ply	12715 ROLLING ROAD DR, PINECREST, FL.
12715	T13A	COMMON	5	1	Job Reference (optional)

Trusscorp Int., 9590 NW 89 AVE, Medley, FL

8.820 s Dec 4 2024 MiTek Industries, Inc. Thu Jun 5 12:44:46 2025 Page 1
ID:_GLN6EJBZ1GCD23RDL_tAxzKvJz-0Kl7aqLc2AoS?C2_?P56SK_fGNDQpkuijp_D81z9LM?

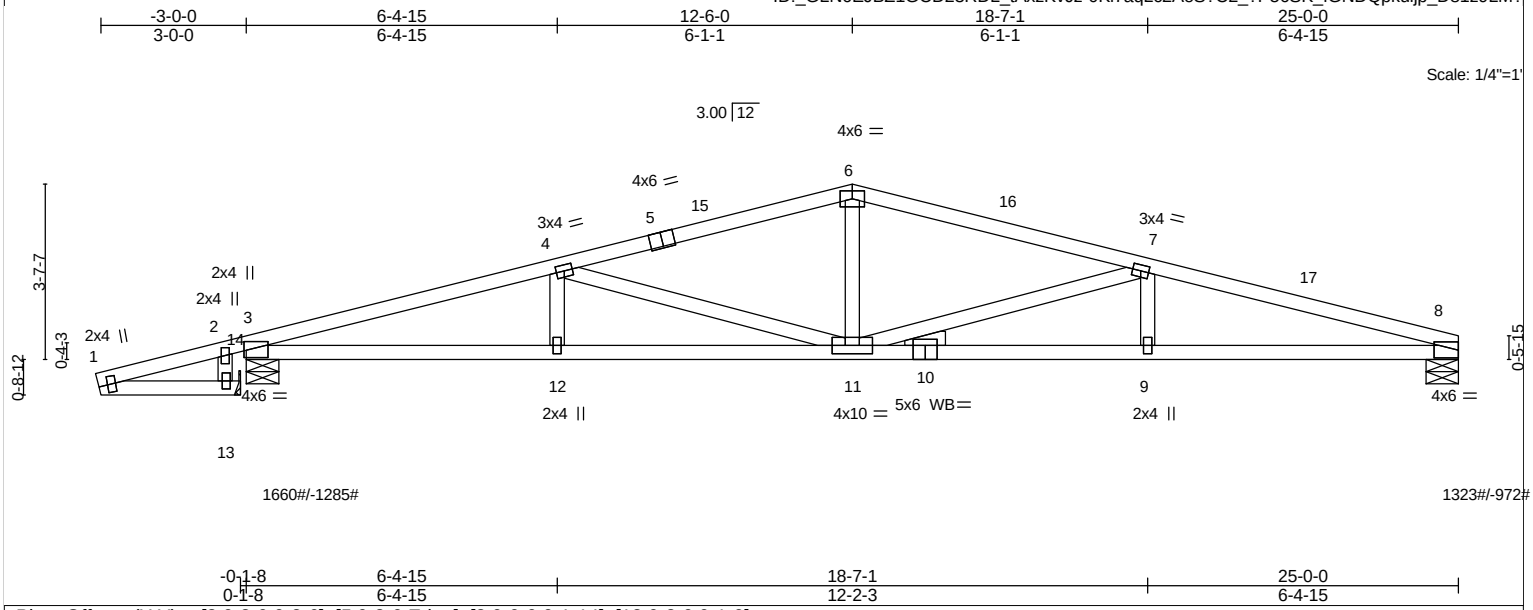

Plate Offsets (X,Y)-- [3:0-3-0,0-2-6], [5:0-3-0,Edge], [8:0-0-0,0-1-14], [13:0-2-0,0-1-0]

LOADING (psf)		**SPACING-**	2-0-0	**CSI.**		**DEFL.**	in	(loc)	l/defl	L/d	**PLATES**	**GRIP**
TCLL	30.0	Plate Grip DOL	1.33	TC	0.86	Vert(LL)	0.28	11-12	>999	360	MT20	244/190
TCDL	15.0	Lumber DOL	1.33	BC	0.95	Vert(CT)	-0.45	11-12	>644	180		
BCLL	0.0	Rep Stress Incr	YES	WB	0.90	Horz(CT)	0.13	8	n/a	n/a		
BCDL	10.0	Code FBC2020/TPI2014		Matrix-S							Weight: 114 lb	FT = 0%

LUMBER-
TOP CHORD 2x4 SP No.2 *Except*
T3: 2x4 SP No.1
BOT CHORD 2x4 SP No.2 *Except*
B1: 2x4 SP No.1
WEBS 2x4 SP No.3
OTHERS 2x4 SP No.3

BRACING-
TOP CHORD Structural wood sheathing directly applied.
BOT CHORD Rigid ceiling directly applied or 2-2-0 oc bracing.

MiTek recommends that Stabilizers and required cross bracing be installed during truss erection, in accordance with Stabilizer Installation guide.

REACTIONS. (lb/size) 8=1323/0-8-0 (min. 0-1-9), 3=1660/0-8-0 (min. 0-1-15), 13=0/Mechanical
Max Horz 3=-304(LC 4), 13=351(LC 4)
Max Uplift8=-972(LC 4), 3=-1285(LC 4)
Max Grav 8=1323(LC 1), 3=1660(LC 1)

FORCES. (lb) - Max. Comp./Max. Ten. - All forces 250 (lb) or less except when shown.
TOP CHORD 1-2=-335/290, 3-4=-3584/2514, 4-5=-2614/1971, 5-15=-2547/1973, 6-15=-2545/1980, 6-16=-2545/1983, 7-16=-2616/1976, 7-17=-3648/2671, 8-17=-3709/2660
BOT CHORD 3-12=-2303/3359, 11-12=-2303/3359, 10-11=-2470/3508, 9-10=-2470/3508, 8-9=-2470/3508
WEBS 6-11=-394/720, 7-11=-1177/847, 4-11=-1028/673, 7-9=0/253, 1-13=-243/352

NOTES- (7-8)
1) Unbalanced roof live loads have been considered for this design.
2) Wind: ASCE 7-16; Vult=175mph (3-second gust) Vasd=136mph; HVHZ; TCDL=5.0psf; BCDL=5.0psf; h=28ft; Cat. II; Exp C; Encl., GCpi=0.18; C-C Exterior(2E) -3-0-15 to -0-0-15, Interior(1) -0-0-15 to 9-6-0, Exterior(2R) 9-6-0 to 15-6-0, Interior(1) 15-6-0 to 21-8-0, Exterior(2E) 21-8-0 to 24-8-0; Lumber DOL=1.60 plate grip DOL=1.60
3) Building Designer / Project engineer responsible for verifying applied roof live load shown covers rain loading requirements specific to the use of this truss component.
4) This truss has been designed for a 10.0 psf bottom chord live load nonconcurrent with any other live loads.
5) Refer to girder(s) for truss to truss connections.
6) Provide mechanical connection (by others) of truss to bearing plate capable of withstanding 972 lb uplift at joint 8 and 1285 lb uplift at joint 3.
7) All truss to truss connection by TCI are on the Truss Placement plan.
8) ARMANDO R. PEREZ PE. # 28026 Ph: (305) 882-8826

LOAD CASE(S) Standard

Job	Truss	Truss Type	Qty	Ply	12715 ROLLING ROAD DR, PINECREST, FL.
12715	T14	Roof Special	3	1	Job Reference (optional)

Trusscorp Int., 9590 NW 89 AVE, Medley, FL

8.820 s Dec 4 2024 MiTek Industries, Inc. Thu Jun 5 12:44:48 2025 Page 1
ID:_GLN6EJBZ1GCD23RDL_tAxzKvJz-yitt?WMtao2AFWCM6q7aYl36mAwFHnN?A7TKCwz9LLz

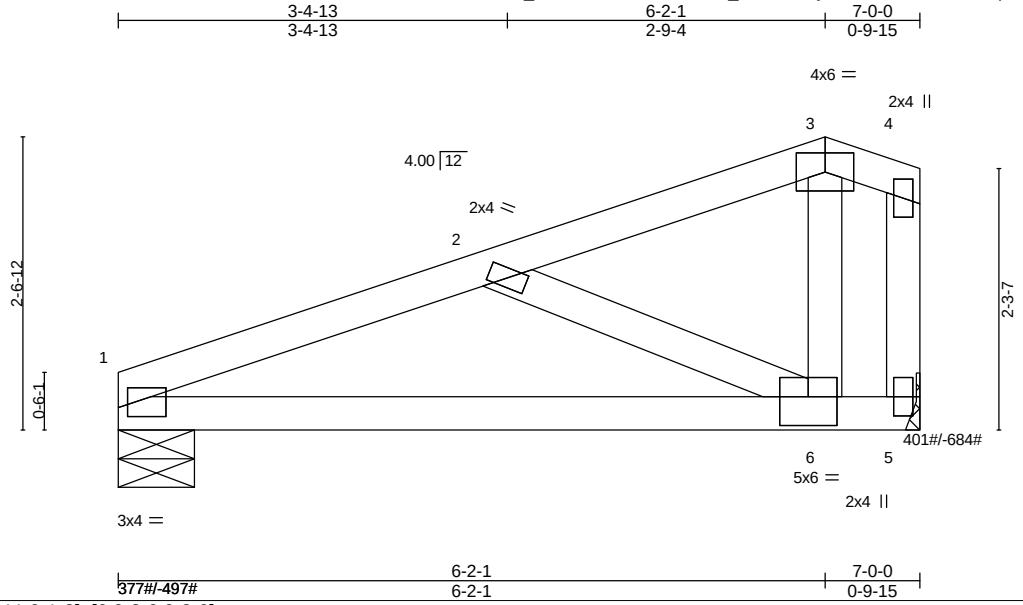

Plate Offsets (X,Y)-- [1:0-0-11,0-1-8], [6:0-3-0,0-3-0]

LOADING (psf)		**SPACING-**	2-0-0	**CSI.**		**DEFL.**	in	(loc)	l/defl	L/d	**PLATES**	**GRIP**
TCLL	30.0	Plate Grip DOL	1.33	TC	0.41	Vert(LL)	0.19	6-9	>444	360	MT20	244/190
TCDL	15.0	Lumber DOL	1.33	BC	0.86	Vert(CT)	-0.18	6-9	>447	180		
BCLL	0.0	Rep Stress Incr	YES	WB	0.33	Horz(CT)	0.01	1	n/a	n/a		
BCDL	10.0	Code FBC2020/TPI2014		Matrix-AS							Weight: 32 lb	FT = 0%

LUMBER-
TOP CHORD 2x4 SP No.2
BOT CHORD 2x4 SP No.2
WEBS 2x4 SP No.3

BRACING-
TOP CHORD Structural wood sheathing directly applied, except end verticals.
BOT CHORD Rigid ceiling directly applied.

MiTek recommends that Stabilizers and required cross bracing be installed during truss erection, in accordance with Stabilizer Installation guide.

REACTIONS. (lb/size) 1=377/0-8-0 (min. 0-1-8), 5=377/Mechanical
Max Horz 1=362(LC 4)
Max Uplift1=-497(LC 4), 5=-684(LC 4)
Max Grav 1=377(LC 1), 5=401(LC 5)

FORCES. (lb) - Max. Comp./Max. Ten. - All forces 250 (lb) or less except when shown.
TOP CHORD 1-2=-532/769
BOT CHORD 1-6=-1016/545
WEBS 3-6=-127/317, 2-6=-592/1104

NOTES- (8-9)
1) Unbalanced roof live loads have been considered for this design.
2) Wind: ASCE 7-16; Vult=175mph (3-second gust) Vasd=136mph; HVHZ; TCDL=5.0psf; BCDL=5.0psf; h=28ft; Cat. II; Exp C; Encl., GCpi=0.18; C-C Exterior(2E) 0-0-0 to 3-2-4, Exterior(2R) 3-2-4 to 6-2-1, Exterior(2E) 6-2-1 to 6-10-4; Lumber DOL=1.60 plate grip DOL=1.60
3) Building Designer / Project engineer responsible for verifying applied roof live load shown covers rain loading requirements specific to the use of this truss component.
4) This truss has been designed for a 10.0 psf bottom chord live load nonconcurrent with any other live loads.
5) Refer to girder(s) for truss to truss connections.
6) Provide mechanical connection (by others) of truss to bearing plate capable of withstanding 497 lb uplift at joint 1 and 684 lb uplift at joint 5.
7) This truss design requires that a minimum of 7/16" structural wood sheathing be applied directly to the top chord and 1/2" gypsum sheetrock be applied directly to the bottom chord.
8) All truss to truss connection by TCI are on the Truss Placement plan.
9) ARMANDO R. PEREZ PE. # 28026 Ph: (305) 882-8826

LOAD CASE(S) Standard

Job	Truss	Truss Type	Qty	Ply	12715 ROLLING ROAD DR, PINECREST, FL.
12715	T17	COMMON	3	1	Job Reference (optional)

Trusscorp Int., 9590 NW 89 AVE, Medley, FL — 8.820 s Dec 4 2024 MiTek Industries, Inc. Thu Jun 5 12:44:50 2025 Page 1

ID:_GLN6EJBZ1GCD23RDL_tAxzKvJz-u5?dQCO76PluUpLlEF92dA9Q9_iUleBIdRyRGoz9LLx

-3-0-0	5-0-6	10-8-0	16-3-10	21-4-0	24-4-0
3-0-0	5-0-6	5-7-10	5-7-10	5-0-6	3-0-0

Scale = 1:45.4

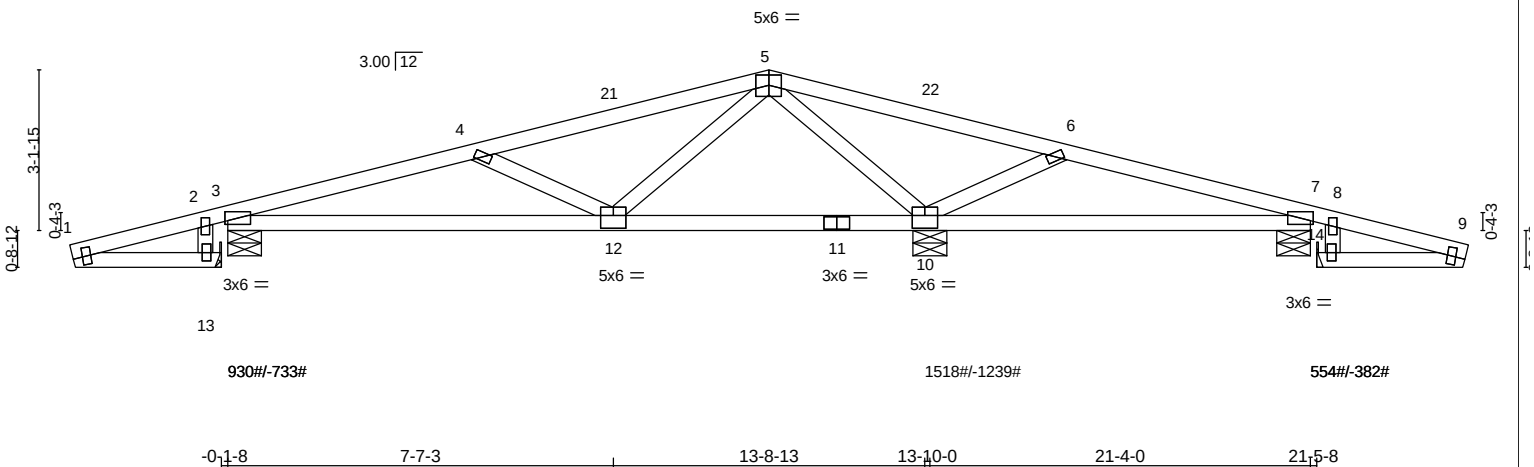

-0-1-8	7-7-3	13-8-13	13-10-0	21-4-0	21-5-8
0-1-8	7-7-3	6-1-11	0-1-3	7-6-0	0-1-8

Plate Offsets (X,Y)-- [5:0-2-14,0-2-6], [10:0-3-0,0-3-0], [12:0-3-0,0-3-0], [13:0-2-0,0-1-0], [14:0-2-0,0-0-8]

LOADING (psf)		**SPACING-**	2-0-0	**CSI.**		**DEFL.**	in	(loc)	l/defl	L/d	**PLATES**	**GRIP**
TCLL	30.0	Plate Grip DOL	1.33	TC	0.55	Vert(LL)	-0.06	12-17	>999	360	MT20	244/190
TCDL	15.0	Lumber DOL	1.33	BC	0.49	Vert(CT)	-0.13	12-17	>999	180		
BCLL	0.0	Rep Stress Incr	YES	WB	0.56	Horz(CT)	0.02	10	n/a	n/a		
BCDL	10.0	Code FBC2020/TPI2014		Matrix-AS							Weight: 105 lb	FT = 0%

LUMBER-
TOP CHORD 2x4 SP No.2
BOT CHORD 2x4 SP No.2
WEBS 2x4 SP No.3
OTHERS 2x4 SP No.3

BRACING-
TOP CHORD Structural wood sheathing directly applied.
BOT CHORD Rigid ceiling directly applied.

MiTek recommends that Stabilizers and required cross bracing be installed during truss erection, in accordance with Stabilizer Installation guide.

REACTIONS. (lb/size) 3=906/0-8-0 (min. 0-1-8), 10=1518/0-8-0 (min. 0-1-13), 13=0/Mechanical, 14=-0/Mechanical, 7=477/0-8-0 (min. 0-1-8)
Max Horz 3=325(LC 9), 13=465(LC 4), 14=-385(LC 4)
Max Uplift3=-733(LC 4), 10=-1239(LC 4), 7=-382(LC 4)
Max Grav 3=930(LC 9), 10=1518(LC 1), 7=554(LC 10)

FORCES. (lb) - Max. Comp./Max. Ten. - All forces 250 (lb) or less except when shown.
TOP CHORD 1-2=-443/375, 2-3=-444/389, 3-4=-1390/885, 4-21=-761/388, 5-21=-695/396, 5-22=-905/1035, 6-22=-913/970, 6-7=-364/386, 7-8=-367/308, 8-9=-368/295
BOT CHORD 3-12=-1088/1418, 11-12=-269/367, 10-11=-269/367, 7-10=-345/271
WEBS 4-12=-702/665, 5-12=-308/621, 5-10=-1500/1413, 1-13=-333/465, 9-14=-249/386, 6-10=-781/739

NOTES- (9-10)
1) Unbalanced roof live loads have been considered for this design.
2) Wind: ASCE 7-16; Vult=175mph (3-second gust) Vasd=136mph; HVHZ; TCDL=5.0psf; BCDL=5.0psf; h=28ft; Cat. II; Exp C; Encl., GCpi=0.18; C-C Exterior(2E) -3-0-15 to 0-0-0, Interior(1) 0-0-0 to 7-8-0, Exterior(2R) 7-8-0 to 13-8-0, Interior(1) 13-8-0 to 21-4-0, Exterior(2E) 21-4-0 to 24-4-15; porch right exposed; Lumber DOL=1.60 plate grip DOL=1.60
3) Building Designer / Project engineer responsible for verifying applied roof live load shown covers rain loading requirements specific to the use of this truss component.
4) All plates are 2x4 MT20 unless otherwise indicated.
5) This truss has been designed for a 10.0 psf bottom chord live load nonconcurrent with any other live loads.
6) Refer to girder(s) for truss to truss connections.
7) Provide mechanical connection (by others) of truss to bearing plate capable of withstanding 733 lb uplift at joint 3, 1239 lb uplift at joint 10 and 382 lb uplift at joint 7.
8) This truss design requires that a minimum of 7/16" structural wood sheathing be applied directly to the top chord and 1/2" gypsum sheetrock be applied directly to the bottom chord.
9) All truss to truss connection by TCI are on the Truss Placement plan.
10) ARMANDO R. PEREZ PE. # 28026 Ph: (305) 882-8826

LOAD CASE(S) Standard

Job	Truss	Truss Type	Qty	Ply	12715 ROLLING ROAD DR, PINECREST, FL.
12715	T18	COMMON	7	1	Job Reference (optional)

Trusscorp Int., 9590 NW 89 AVE, Medley, FL

8.820 s Dec 4 2024 MiTek Industries, Inc. Thu Jun 5 12:44:52 2025 Page 1
ID:_GLN6EJBZ1GCD23RDL_tAxzKvJz-qT6OruPNe0Ycj7V8LfBWibEjyoJZDURa5lRXLhz9LLv

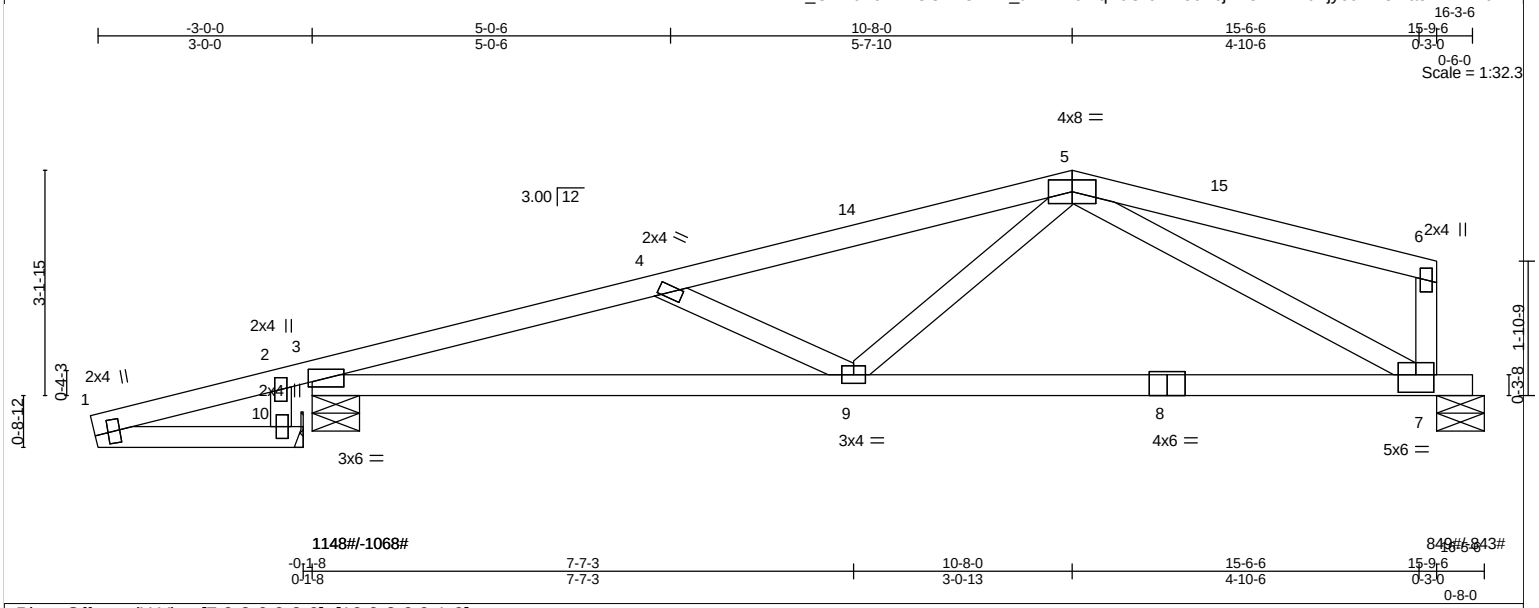

Plate Offsets (X,Y)-- [7:0-3-0,0-3-0], [10:0-2-0,0-1-0]

LOADING (psf)		**SPACING-**	2-0-0	**CSI.**		**DEFL.**	in	(loc)	l/defl	L/d	**PLATES**	**GRIP**
TCLL	30.0	Plate Grip DOL	1.33	TC	0.72	Vert(LL)	-0.14	7-9	>999	360	MT20	244/190
TCDL	15.0	Lumber DOL	1.33	BC	0.71	Vert(CT)	-0.32	7-9	>581	180		
BCLL	0.0	Rep Stress Incr	YES	WB	0.77	Horz(CT)	0.04	7	n/a	n/a		
BCDL	10.0	Code FBC2020/TPI2014		Matrix-AS							Weight: 79 lb	FT = 0%

LUMBER-
TOP CHORD 2x4 SP No.2
BOT CHORD 2x4 SP No.2
WEBS 2x4 SP No.3
OTHERS 2x4 SP No.3

BRACING-
TOP CHORD Structural wood sheathing directly applied.
BOT CHORD Rigid ceiling directly applied.

MiTek recommends that Stabilizers and required cross bracing be installed during truss erection, in accordance with Stabilizer Installation guide.

REACTIONS. (lb/size) 3=1148/0-8-0 (min. 0-1-8), 10=-0/Mechanical, 7=849/0-8-0 (min. 0-1-8)
Max Horz 3=355(LC 9), 10=549(LC 4)
Max Uplift3=-1068(LC 4), 7=-843(LC 4)
Max Grav 3=1148(LC 1), 7=849(LC 1)

FORCES. (lb) - Max. Comp./Max. Ten. - All forces 250 (lb) or less except when shown.
TOP CHORD 1-2=-524/397, 2-3=-526/412, 3-4=-2156/1841, 4-14=-1599/1345, 5-14=-1537/1352
BOT CHORD 3-9=-1833/2035, 8-9=-1048/1036, 7-8=-1048/1036
WEBS 4-9=-645/664, 1-10=-356/550, 5-9=-262/654, 5-7=-1195/1210, 6-7=-196/263

NOTES- (8-9)
1) Unbalanced roof live loads have been considered for this design.
2) Wind: ASCE 7-16; Vult=175mph (3-second gust) Vasd=136mph; HVHZ; TCDL=5.0psf; BCDL=5.0psf; h=28ft; Cat. II; Exp C; Encl., GCpi=0.18; C-C Exterior(2E) -3-0-15 to 0-0-0, Interior(1) 0-0-0 to 7-8-0, Exterior(2R) 7-8-0 to 12-7-10, Exterior(2E) 12-7-10 to 15-7-10; Lumber DOL=1.60 plate grip DOL=1.60
3) Building Designer / Project engineer responsible for verifying applied roof live load shown covers rain loading requirements specific to the use of this truss component.
4) This truss has been designed for a 10.0 psf bottom chord live load nonconcurrent with any other live loads.
5) Refer to girder(s) for truss to truss connections.
6) Provide mechanical connection (by others) of truss to bearing plate capable of withstanding 1068 lb uplift at joint 3 and 843 lb uplift at joint 7.
7) This truss design requires that a minimum of 7/16" structural wood sheathing be applied directly to the top chord and 1/2" gypsum sheetrock be applied directly to the bottom chord.
8) All truss to truss connection by TCI are on the Truss Placement plan.
9) ARMANDO R. PEREZ PE. # 28026 Ph: (305) 882-8826

LOAD CASE(S) Standard

Job	Truss	Truss Type	Qty	Ply	12715 ROLLING ROAD DR, PINECREST, FL.
12715	T19	ROOF SPECIAL	1	1	Job Reference (optional)

Trusscorp Int., 9590 NW 89 AVE, Medley, FL

8.820 s Dec 4 2024 MiTek Industries, Inc. Thu Jun 5 12:44:54 2025 Page 1
ID:_GLN6EJBZ1GCD23RDL_tAxzKvJz-nsE8GaRe9eoKzRfWT4E_n0J0Qb?ehOutY3wePaz9LLt

-0-10-8	3-2-8	7-5-6	11-2-8	14-11-10	19-2-8	22-5-0	25-5-0
0-10-8	3-2-8	4-2-14	3-9-2	3-9-2	4-2-14	3-2-8	3-0-0

Scale = 1:44.7

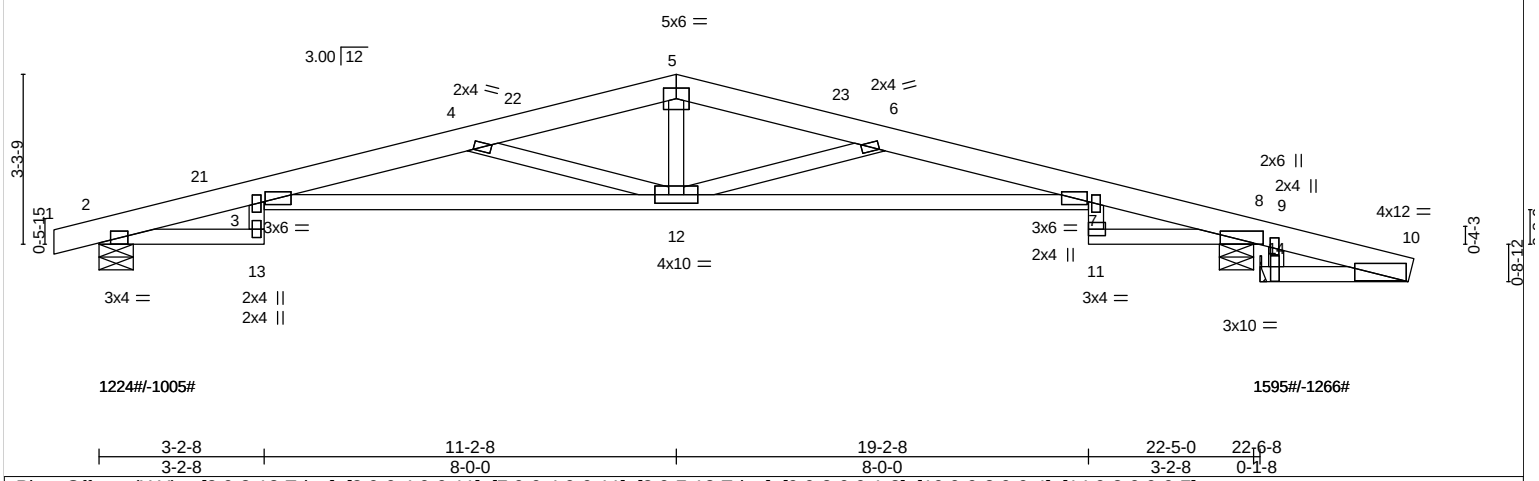

3-2-8	11-2-8	19-2-8	22-5-0	22-6-8
3-2-8	8-0-0	8-0-0	3-2-8	0-1-8

Plate Offsets (X,Y)-- [2:0-2-12,Edge], [3:0-0-4,0-0-11], [7:0-0-4,0-0-11], [8:0-7-12,Edge], [9:0-3-0,0-1-2], [10:0-0-8,0-0-4], [14:0-2-9,0-0-7]

LOADING (psf)		**SPACING-**	2-0-0	**CSI.**		**DEFL.**	in	(loc)	l/defl	L/d	**PLATES**	**GRIP**
TCLL	30.0	Plate Grip DOL	1.33	TC	0.91	Vert(LL)	0.36	3-12	>750	360	MT20	244/190
TCDL	15.0	Lumber DOL	1.33	BC	0.73	Vert(CT)	-0.60	3-12	>448	180		
BCLL	0.0	Rep Stress Incr	YES	WB	0.77	Horz(CT)	0.14	8	n/a	n/a		
BCDL	10.0	Code FBC2020/TPI2014		Matrix-AS							Weight: 118 lb	FT = 0%

LUMBER-
TOP CHORD 2x6 SP No.2 *Except*
T2: 2x6 SP 2400F 2.0E
BOT CHORD 2x4 SP No.2 *Except*
B2: 2x4 SP No.3
WEBS 2x4 SP No.3
OTHERS 2x4 SP No.3

BRACING-
TOP CHORD Structural wood sheathing directly applied.
BOT CHORD Rigid ceiling directly applied.

MiTek recommends that Stabilizers and required cross bracing be installed during truss erection, in accordance with Stabilizer Installation guide.

REACTIONS. (lb/size) 2=1224/0-8-0 (min. 0-1-8), 8=1595/0-8-0 (min. 0-1-14), 14=0/Mechanical
Max Horz 2=2162(LC 1), 14=-2162(LC 1)
Max Uplift2=-1005(LC 4), 8=-1266(LC 4)
Max Grav 2=1224(LC 1), 8=1595(LC 1)

FORCES. (lb) - Max. Comp./Max. Ten. - All forces 250 (lb) or less except when shown.
TOP CHORD 2-21=-2438/1734, 3-21=-2403/1736, 3-4=-3394/2664, 4-22=-2207/1728, 5-22=-2126/1737, 5-23=-2159/1727, 6-23=-2185/1720, 6-7=-2684/2108, 7-8=-2140/1502, 8-9=-2040/1373, 9-10=-2077/1362
BOT CHORD 3-12=-1016/1215, 7-12=-410/664
WEBS 5-12=-339/649, 10-14=-1408/2163, 4-12=-1345/1087, 6-12=-728/455

NOTES- (8-9)
1) Unbalanced roof live loads have been considered for this design.
2) Wind: ASCE 7-16; Vult=175mph (3-second gust) Vasd=136mph; HVHZ; TCDL=5.0psf; BCDL=5.0psf; h=28ft; Cat. II; Exp C; Encl., GCpi=0.18; C-C Exterior(2E) -0-10-8 to 2-1-8, Interior(1) 2-1-8 to 8-2-8, Exterior(2R) 8-2-8 to 14-2-8, Interior(1) 14-2-8 to 22-5-0, Exterior(2E) 22-5-0 to 25-5-11; Lumber DOL=1.60 plate grip DOL=1.60
3) Building Designer / Project engineer responsible for verifying applied roof live load shown covers rain loading requirements specific to the use of this truss component.
4) This truss has been designed for a 10.0 psf bottom chord live load nonconcurrent with any other live loads.
5) Refer to girder(s) for truss to truss connections.
6) Provide mechanical connection (by others) of truss to bearing plate capable of withstanding 1005 lb uplift at joint 2 and 1266 lb uplift at joint 8.
7) This truss design requires that a minimum of 7/16" structural wood sheathing be applied directly to the top chord and 1/2" gypsum sheetrock be applied directly to the bottom chord.
8) All truss to truss connection by TCI are on the Truss Placement plan.
9) ARMANDO R. PEREZ PE. # 28026 Ph: (305) 882-8826

LOAD CASE(S) Standard

Job	Truss	Truss Type	Qty	Ply	12715 ROLLING ROAD DR, PINECREST, FL.
12715	T19A	ROOF SPECIAL	10	1	Job Reference (optional)

Trusscorp Int., 9590 NW 89 AVE, Medley, FL — 8.820 s Dec 4 2024 MiTek Industries, Inc. Thu Jun 5 12:44:56 2025 Page 1
ID:_GLN6EJBZ1GCD23RDL_tAxzKvJz-jFMvhFTuhF21CkpvaVGSsRPMzPit9JvA0NPlUSz9LLr

3-2-8	7-0-2	11-2-8	15-4-14	19-2-8	21-9-0	22-5-0
3-2-8	3-9-10	4-2-6	4-2-6	3-9-10	2-6-8	0-8-0

Scale = 1:39.4

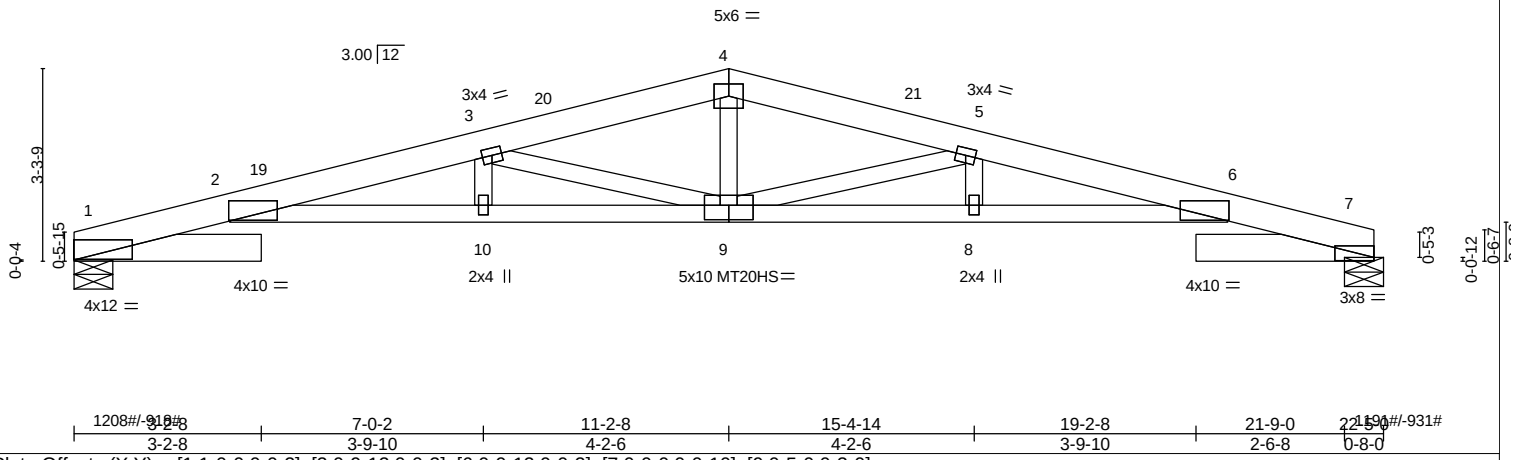

3-2-8	7-0-2	11-2-8	15-4-14	19-2-8	21-9-0	22-5-0
3-2-8	3-9-10	4-2-6	4-2-6	3-9-10	2-6-8	0-8-0

Plate Offsets (X,Y)-- [1:1-0-0,0-0-2], [2:0-9-12,0-0-2], [6:0-9-12,0-0-2], [7:0-0-0,0-0-10], [9:0-5-0,0-3-0]

LOADING (psf)		**SPACING-**	2-0-0	**CSI.**		**DEFL.**	in	(loc)	l/defl	L/d	**PLATES**	**GRIP**
TCLL	30.0	Plate Grip DOL	1.33	TC	0.85	Vert(LL)	0.49	10-18	>524	360	MT20	244/190
TCDL	15.0	Lumber DOL	1.33	BC	0.68	Vert(CT)	-0.75	10-18	>343	180	MT20HS	187/143
BCLL	0.0	Rep Stress Incr	YES	WB	0.68	Horz(CT)	0.31	7	n/a	n/a		
BCDL	10.0	Code FBC2020/TPI2014		Matrix-AS							Weight: 111 lb	FT = 0%

LUMBER-
TOP CHORD 2x6 SP 2400F 2.0E
BOT CHORD 2x6 SP No.2 *Except*
B2: 2x4 SP 2400F 2.0E
WEBS 2x4 SP No.3

BRACING-
TOP CHORD Structural wood sheathing directly applied.
BOT CHORD Rigid ceiling directly applied.

MiTek recommends that Stabilizers and required cross bracing be installed during truss erection, in accordance with Stabilizer Installation guide.

REACTIONS. (lb/size) 1=1208/0-8-0 (min. 0-1-8), 7=1191/0-8-0 (min. 0-1-8)
Max Horz 1=2(LC 4)
Max Uplift1=-918(LC 4), 7=-931(LC 4)

FORCES. (lb) - Max. Comp./Max. Ten. - All forces 250 (lb) or less except when shown.
TOP CHORD 1-2=-287/232, 2-19=-5087/3804, 2-3=-4768/3644, 3-20=-3088/2461, 4-20=-3048/2468, 4-21=-3048/2468, 5-21=-3087/2460, 5-6=-4665/3608, 6-7=-283/237
BOT CHORD 2-10=-3476/4690, 9-10=-3476/4690, 8-9=-3437/4580, 6-8=-3437/4580
WEBS 4-9=-693/1048, 3-9=-1802/1356, 5-9=-1687/1316

NOTES- (9-10)
1) Unbalanced roof live loads have been considered for this design.
2) Wind: ASCE 7-16; Vult=175mph (3-second gust) Vasd=136mph; HVHZ; TCDL=5.0psf; BCDL=5.0psf; h=28ft; Cat. II; Exp C; Encl., GCpi=0.18; C-C Exterior(2E) 0-4-0 to 3-4-0, Interior(1) 3-4-0 to 8-2-8, Exterior(2R) 8-2-8 to 14-2-8, Interior(1) 14-2-8 to 18-8-0, Exterior(2E) 18-8-0 to 21-11-0; Lumber DOL=1.60 plate grip DOL=1.60
3) Building Designer / Project engineer responsible for verifying applied roof live load shown covers rain loading requirements specific to the use of this truss component.
4) All plates are MT20 plates unless otherwise indicated.
5) This truss has been designed for a 10.0 psf bottom chord live load nonconcurrent with any other live loads.
6) Provide mechanical connection (by others) of truss to bearing plate capable of withstanding 918 lb uplift at joint 1 and 931 lb uplift at joint 7.
7) Beveled plate or shim required to provide full bearing surface with truss chord at joint(s) 1, 7.
8) This truss design requires that a minimum of 7/16" structural wood sheathing be applied directly to the top chord and 1/2" gypsum sheetrock be applied directly to the bottom chord.
9) All truss to truss connection by TCI are on the Truss Placement plan.
10) ARMANDO R. PEREZ PE. # 28026 Ph: (305) 882-8826

LOAD CASE(S) Standard

Job	Truss	Truss Type	Qty	Ply	12715 ROLLING ROAD DR, PINECREST, FL.
12715	T20	Common	1	1	Job Reference (optional)

Trusscorp Int., 9590 NW 89 AVE, Medley, FL

8.820 s Dec 4 2024 MiTek Industries, Inc. Thu Jun 5 12:44:58 2025 Page 1
ID:_GLN6EJBZ1GCD23RDL_tAxzKvJz-fdUf6xU8DsIlS2yHiwIwysUkaCSBdMbTThusYLz9LLp

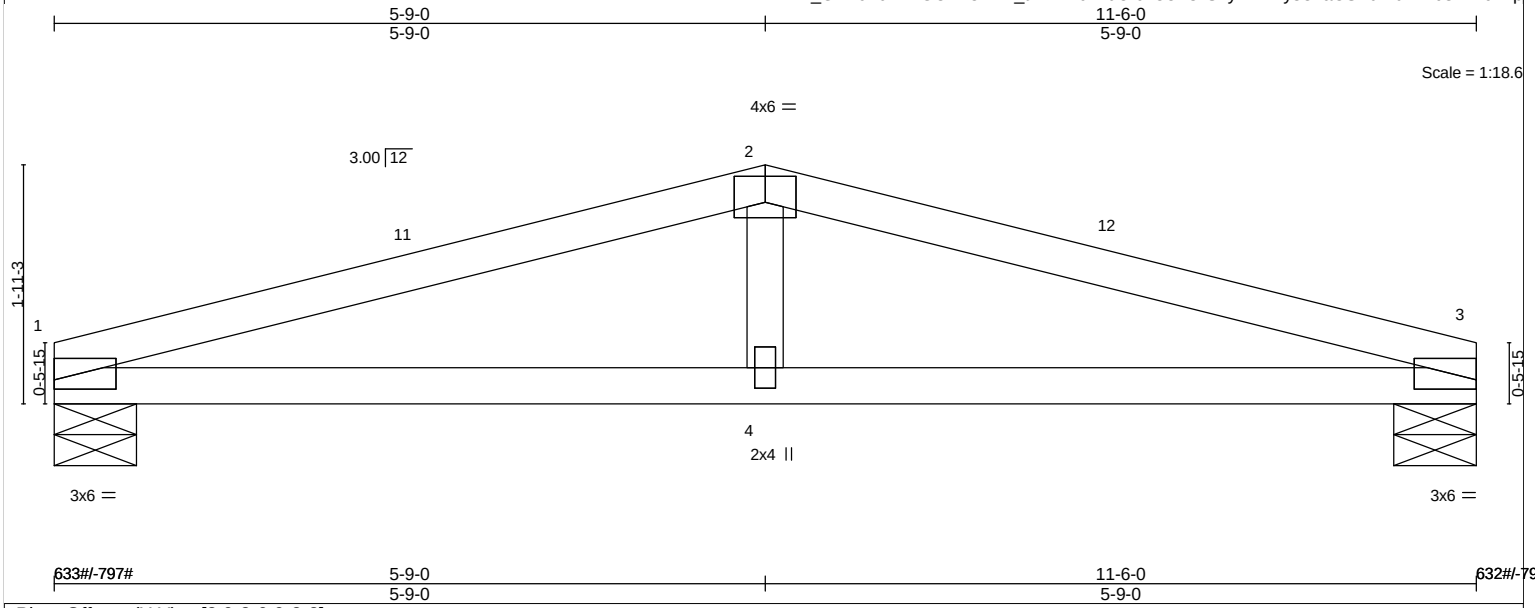

Plate Offsets (X,Y)-- [2:0-3-0,0-2-8]

LOADING (psf)		SPACING-	2-0-0	CSI.		DEFL.	in	(loc)	l/defl	L/d	PLATES	GRIP
TCLL	30.0	Plate Grip DOL	1.33	TC	0.71	Vert(LL)	0.07	4-10	>999	360	MT20	244/190
TCDL	15.0	Lumber DOL	1.33	BC	0.37	Vert(CT)	-0.09	4-10	>999	180		
BCLL	0.0	Rep Stress Incr	YES	WB	0.09	Horz(CT)	0.02	3	n/a	n/a		
BCDL	10.0	Code FBC2020/TPI2014		Matrix-AS							Weight: 37 lb	FT = 0%

LUMBER-
TOP CHORD 2x4 SP No.2
BOT CHORD 2x4 SP No.2
WEBS 2x4 SP No.3

BRACING-
TOP CHORD Structural wood sheathing directly applied.
BOT CHORD Rigid ceiling directly applied.

MiTek recommends that Stabilizers and required cross bracing be installed during truss erection, in accordance with Stabilizer Installation guide.

REACTIONS. (lb/size) 1=632/0-8-0 (min. 0-1-8), 3=632/0-8-0 (min. 0-1-8)
Max Uplift1=-797(LC 4), 3=-797(LC 4)

FORCES. (lb) - Max. Comp./Max. Ten. - All forces 250 (lb) or less except when shown.
TOP CHORD 1-11=-1345/1735, 2-11=-1287/1742, 2-12=-1287/1742, 3-12=-1345/1735
BOT CHORD 1-4=-1568/1249, 3-4=-1568/1249

NOTES- (7-8)
1) Unbalanced roof live loads have been considered for this design.
2) Wind: ASCE 7-16; Vult=175mph (3-second gust) Vasd=136mph; HVHZ; TCDL=5.0psf; BCDL=5.0psf; h=28ft; Cat. II; Exp C; Encl., GCpi=0.18; C-C Exterior(2E) 0-0-0 to 3-0-0, Exterior(2R) 3-0-0 to 8-6-0, Exterior(2E) 8-6-0 to 11-6-0; Lumber DOL=1.60 plate grip DOL=1.60
3) Building Designer / Project engineer responsible for verifying applied roof live load shown covers rain loading requirements specific to the use of this truss component.
4) This truss has been designed for a 10.0 psf bottom chord live load nonconcurrent with any other live loads.
5) Provide mechanical connection (by others) of truss to bearing plate capable of withstanding 797 lb uplift at joint 1 and 797 lb uplift at joint 3.
6) This truss design requires that a minimum of 7/16" structural wood sheathing be applied directly to the top chord and 1/2" gypsum sheetrock be applied directly to the bottom chord.
7) All truss to truss connection by TCI are on the Truss Placement plan.
8) ARMANDO R. PEREZ PE. # 28026 Ph: (305) 882-8826

LOAD CASE(S) Standard

Job	Truss	Truss Type	Qty	Ply	12715 ROLLING ROAD DR, PINECREST, FL.
12715	T21	Common	1	1	Job Reference (optional)

Trusscorp Int., 9590 NW 89 AVE, Medley, FL

8.820 s Dec 4 2024 MiTek Industries, Inc. Thu Jun 5 12:45:00 2025 Page 1
ID:_GLN6EJBZ1GCD23RDL_tAxzKvJz-b0bPWdWPlTZThM6gpLLO1HZ0200T5D5mx?NzdDz9LLn

5-9-10 (5-9-10) | 11-2-8 (5-4-14) | 16-7-6 (5-4-14) | 21-9-0 (5-1-10)

Scale = 1:35.8

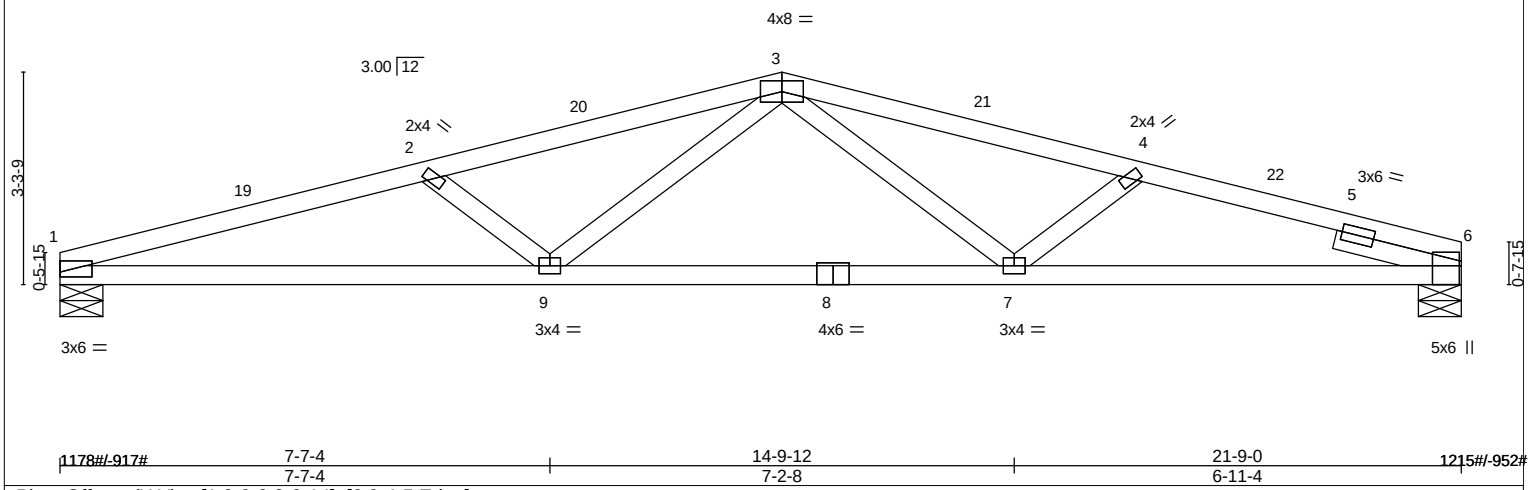

Plate Offsets (X,Y)-- [1:0-0-0,0-0-14], [6:0-4-5,Edge]

LOADING (psf)		**SPACING-**	2-0-0	**CSI.**		**DEFL.**	in	(loc)	l/defl	L/d	**PLATES**	**GRIP**
TCLL	30.0	Plate Grip DOL	1.33	TC	0.97	Vert(LL)	0.30	7-9	>858	360	MT20	244/190
TCDL	15.0	Lumber DOL	1.33	BC	0.83	Vert(CT)	-0.49	7-9	>534	180		
BCLL	0.0	Rep Stress Incr	YES	WB	0.28	Horz(CT)	0.09	6	n/a	n/a		
BCDL	10.0	Code FBC2020/TPI2014		Matrix-AS							Weight: 89 lb	FT = 0%

LUMBER-
TOP CHORD 2x4 SP No.2
BOT CHORD 2x4 SP No.2
WEBS 2x4 SP No.3
SLIDER Right 2x4 SP No.3 2-0-0

BRACING-
TOP CHORD Structural wood sheathing directly applied.
BOT CHORD Rigid ceiling directly applied.

MiTek recommends that Stabilizers and required cross bracing be installed during truss erection, in accordance with Stabilizer Installation guide.

REACTIONS. (lb/size) 1=1178/0-8-0 (min. 0-1-8), 6=1215/0-8-0 (min. 0-1-8)
Max Horz 1=15(LC 4)
Max Uplift1=-917(LC 4), 6=-952(LC 4)

FORCES. (lb) - Max. Comp./Max. Ten. - All forces 250 (lb) or less except when shown.
TOP CHORD 1-19=-3255/2521, 2-19=-3188/2532, 2-20=-2836/2209, 3-20=-2780/2217, 3-21=-2503/2015, 4-21=-2547/2008, 4-22=-2750/2204, 5-22=-2777/2196, 5-6=-470/320
BOT CHORD 1-9=-2375/3093, 8-9=-1622/2137, 7-8=-1622/2137, 6-7=-2020/2626
WEBS 2-9=-565/554, 3-9=-424/782, 3-7=-177/491, 4-7=-339/339

NOTES- (7-8)
1) Unbalanced roof live loads have been considered for this design.
2) Wind: ASCE 7-16; Vult=175mph (3-second gust) Vasd=136mph; HVHZ; TCDL=5.0psf; BCDL=5.0psf; h=28ft; Cat. II; Exp C; Encl., GCpi=0.18; C-C Exterior(2E) 0-0-0 to 3-0-0, Interior(1) 3-0-0 to 8-2-8, Exterior(2R) 8-2-8 to 14-2-8, Interior(1) 14-2-8 to 18-9-0, Exterior(2E) 18-9-0 to 21-9-0; Lumber DOL=1.60 plate grip DOL=1.60
3) Building Designer / Project engineer responsible for verifying applied roof live load shown covers rain loading requirements specific to the use of this truss component.
4) This truss has been designed for a 10.0 psf bottom chord live load nonconcurrent with any other live loads.
5) Provide mechanical connection (by others) of truss to bearing plate capable of withstanding 917 lb uplift at joint 1 and 952 lb uplift at joint 6.
6) This truss design requires that a minimum of 7/16" structural wood sheathing be applied directly to the top chord and 1/2" gypsum sheetrock be applied directly to the bottom chord.
7) All truss to truss connection by TCI are on the Truss Placement plan.
8) ARMANDO R. PEREZ PE. # 28026 Ph: (305) 882-8826

LOAD CASE(S) Standard

Job	Truss	Truss Type	Qty	Ply	12715 ROLLING ROAD DR, PINECREST, FL.
12715	T22	COMMON	1	1	Job Reference (optional)

Trusscorp Int., 9590 NW 89 AVE, Medley, FL

8.820 s Dec 4 2024 MiTek Industries, Inc. Thu Jun 5 12:45:01 2025 Page 1
ID:_GLN6EJBZ1GCD23RDL_tAxzKvJz-4C9okzW1WnhKJWhsN2sdZV6BWQMRqgYv9f7W9gz9LLm

-1-8-0	5-9-10	11-2-8	16-7-6	22-5-0	25-5-0
1-8-0	5-9-10	5-4-14	5-4-14	5-9-10	3-0-0

Scale = 1:47.5

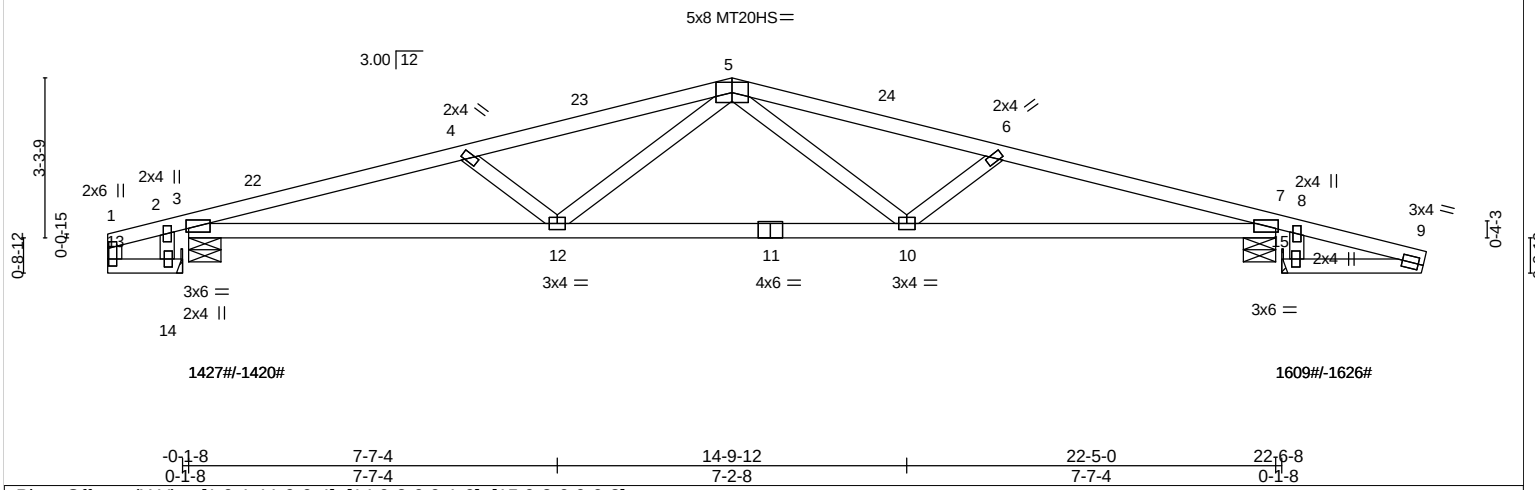

-0-1-8	7-7-4	14-9-12	22-5-0	22-6-8
0-1-8	7-7-4	7-2-8	7-7-4	0-1-8

Plate Offsets (X,Y)-- [1:0-1-11,0-0-4], [14:0-2-0,0-1-0], [15:0-2-0,0-0-8]

LOADING (psf)		**SPACING-**	2-0-0	**CSI.**		**DEFL.**	in	(loc)	l/defl	L/d	**PLATES**	**GRIP**
TCLL	30.0	Plate Grip DOL	1.33	TC	0.99	Vert(LL)	0.41	10-12	>650	360	MT20	244/190
TCDL	15.0	Lumber DOL	1.33	BC	0.85	Vert(CT)	-0.51	10-12	>530	180	MT20HS	187/143
BCLL	0.0	Rep Stress Incr	YES	WB	0.27	Horz(CT)	0.10	7	n/a	n/a		
BCDL	10.0	Code FBC2020/TPI2014		Matrix-AS							Weight: 104 lb	FT = 0%

LUMBER-
TOP CHORD 2x4 SP No.1
BOT CHORD 2x4 SP No.1 *Except*
B1: 2x4 SP No.2
WEBS 2x4 SP No.3
OTHERS 2x4 SP No.3

BRACING-
TOP CHORD Structural wood sheathing directly applied.
BOT CHORD Rigid ceiling directly applied.

MiTek recommends that Stabilizers and required cross bracing be installed during truss erection, in accordance with Stabilizer Installation guide.

REACTIONS. (lb/size) 3=1354/0-8-0 (min. 0-1-11), 14=0/Mechanical, 15=0/Mechanical, 7=1525/0-8-0 (min. 0-1-14)
Max Horz 3=159(LC 9), 15=-186(LC 4)
Max Uplift3=-1420(LC 4), 7=-1626(LC 4)
Max Grav 3=1427(LC 5), 7=1609(LC 5)

FORCES. (lb) - Max. Comp./Max. Ten. - All forces 250 (lb) or less except when shown.
TOP CHORD 3-22=-3475/3324, 4-22=-3467/3336, 4-23=-3110/2941, 5-23=-3091/2948, 5-24=-2990/2843, 6-24=-3005/2836, 6-7=-3336/3192
BOT CHORD 3-12=-3200/3215, 11-12=-2270/2210, 10-11=-2270/2210, 7-10=-3050/3071
WEBS 5-10=-404/650, 6-10=-489/610, 5-12=-534/756, 4-12=-550/675

NOTES- (9-10)
1) Unbalanced roof live loads have been considered for this design.
2) Wind: ASCE 7-16; Vult=175mph (3-second gust) Vasd=136mph; HVHZ; TCDL=5.0psf; BCDL=5.0psf; h=28ft; Cat. II; Exp C; Part. Encl., GCpi=0.55; C-C Exterior(2E) -1-6-4 to 1-5-12, Interior(1) 1-5-12 to 8-2-8, Exterior(2R) 8-2-8 to 14-2-8, Interior(1) 14-2-8 to 22-5-0, Exterior(2E) 22-5-0 to 25-5-15; Lumber DOL=1.60 plate grip DOL=1.60
3) Building Designer / Project engineer responsible for verifying applied roof live load shown covers rain loading requirements specific to the use of this truss component.
4) All plates are MT20 plates unless otherwise indicated.
5) This truss has been designed for a 10.0 psf bottom chord live load nonconcurrent with any other live loads.
6) Refer to girder(s) for truss to truss connections.
7) Provide mechanical connection (by others) of truss to bearing plate capable of withstanding 1420 lb uplift at joint 3 and 1626 lb uplift at joint 7.
8) This truss design requires that a minimum of 7/16" structural wood sheathing be applied directly to the top chord and 1/2" gypsum sheetrock be applied directly to the bottom chord.
9) All truss to truss connection by TCI are on the Truss Placement plan.
10) ARMANDO R. PEREZ PE. # 28026 Ph: (305) 882-8826

LOAD CASE(S) Standard

Job	Truss	Truss Type	Qty	Ply	12715 ROLLING ROAD DR, PINECREST, FL.
12715	T23	ROOF SPECIAL	8	1	Job Reference (optional)

Trusscorp Int., 9590 NW 89 AVE, Medley, FL

8.820 s Dec 4 2024 MiTek Industries, Inc. Thu Jun 5 12:45:03 2025 Page 1
ID:_GLN6EJBZ1GCD23RDL_tAxzKvJz-0bHY9eYH2Ox2YprFVTu5ewBdID6LIVmCdzcdEYz9LLk

-3-0-0	3-8-0	11-2-8	18-9-0	22-5-0	25-5-0
3-0-0	3-8-0	7-6-8	7-6-8	3-8-0	3-0-0

Scale = 1:50.0

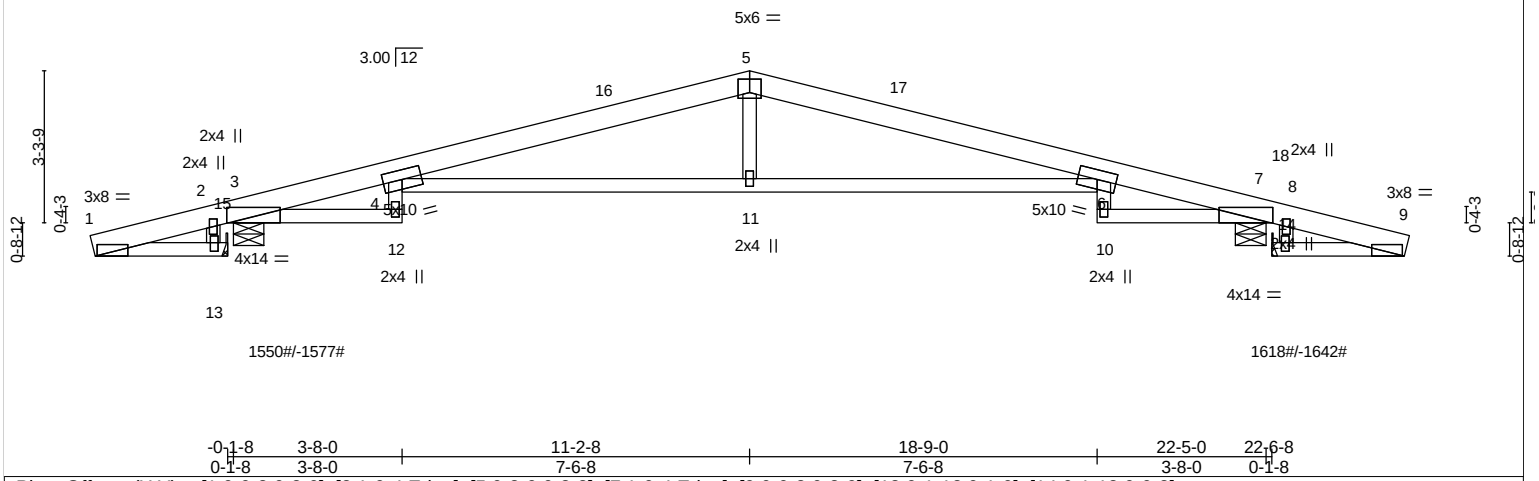

-0-1-8	3-8-0	11-2-8	18-9-0	22-5-0	22-6-8
0-1-8	3-8-0	7-6-8	7-6-8	3-8-0	0-1-8

Plate Offsets (X,Y)-- [1:0-0-8,0-3-0], [3:1-0-4,Edge], [5:0-3-0,0-3-8], [7:1-0-4,Edge], [9:0-0-8,0-3-0], [13:0-1-12,0-1-0], [14:0-1-12,0-0-8]

LOADING (psf)		**SPACING-**	2-0-0	**CSI.**		**DEFL.**	in	(loc)	l/defl	L/d	**PLATES**	**GRIP**
TCLL	30.0	Plate Grip DOL	1.33	TC	0.59	Vert(LL)	0.29	4-11	>890	360	MT20	244/190
TCDL	15.0	Lumber DOL	1.33	BC	0.57	Vert(CT)	-0.41	4-11	>634	180		
BCLL	0.0	Rep Stress Incr	YES	WB	0.60	Horz(CT)	0.12	7	n/a	n/a		
BCDL	10.0	Code FBC2020/TPI2014		Matrix-S							Weight: 117 lb	FT = 0%

LUMBER-
TOP CHORD 2x6 SP 2400F 2.0E
BOT CHORD 2x4 SP No.2 *Except*
B2: 2x4 SP No.3
WEBS 2x4 SP No.3
OTHERS 2x4 SP No.3

BRACING-
TOP CHORD Structural wood sheathing directly applied or 5-9-6 oc purlins.
BOT CHORD Rigid ceiling directly applied or 6-0-0 oc bracing.

MiTek recommends that Stabilizers and required cross bracing be installed during truss erection, in accordance with Stabilizer Installation guide.

REACTIONS. (lb/size) 3=1468/0-8-0 (min. 0-1-13), 7=1534/0-8-0 (min. 0-1-15), 13=-0/Mechanical, 14=0/Mechanical
Max Horz 3=1031(LC 10), 13=781(LC 9), 14=-1727(LC 5)
Max Uplift3=-1577(LC 4), 7=-1642(LC 4)
Max Grav 3=1550(LC 5), 7=1618(LC 5)

FORCES. (lb) - Max. Comp./Max. Ten. - All forces 250 (lb) or less except when shown.
TOP CHORD 1-2=-746/465, 2-15=-782/569, 3-15=-782/569, 3-4=-2018/1810, 4-16=-2201/2116, 5-16=-2172/2127, 5-17=-2187/2142, 6-17=-2215/2132, 6-7=-2005/1797, 7-18=-1770/1568, 8-18=-1770/1568, 8-9=-1661/1427
BOT CHORD 4-11=-274/331, 6-11=-274/331
WEBS 5-11=0/342, 1-13=-476/781, 9-14=-1476/1727

NOTES- (7-8)
1) Unbalanced roof live loads have been considered for this design.
2) Wind: ASCE 7-16; Vult=175mph (3-second gust) Vasd=136mph; HVHZ; TCDL=5.0psf; BCDL=5.0psf; h=28ft; Cat. II; Exp C; Part. Encl., GCpi=0.55; C-C Exterior(2E) -3-0-11 to -0-0-11, Interior(1) -0-0-11 to 8-2-8, Exterior(2R) 8-2-8 to 14-2-8, Interior(1) 14-2-8 to 22-5-11, Exterior(2E) 22-5-11 to 25-5-11; Lumber DOL=1.60 plate grip DOL=1.60
3) Building Designer / Project engineer responsible for verifying applied roof live load shown covers rain loading requirements specific to the use of this truss component.
4) This truss has been designed for a 10.0 psf bottom chord live load nonconcurrent with any other live loads.
5) Refer to girder(s) for truss to truss connections.
6) Provide mechanical connection (by others) of truss to bearing plate capable of withstanding 1577 lb uplift at joint 3 and 1642 lb uplift at joint 7.
7) All truss to truss connection by TCI are on the Truss Placement plan.
8) ARMANDO R. PEREZ PE. # 28026 Ph: (305) 882-8826

LOAD CASE(S) Standard

Job	Truss	Truss Type	Qty	Ply	12715 ROLLING ROAD DR, PINECREST, FL.
12715	V2	Valley	4	1	Job Reference (optional)

Trusscorp Int., 9590 NW 89 AVE, Medley, FL

8.820 s Dec 4 2024 MiTek Industries, Inc. Thu Jun 5 12:45:05 2025 Page 1
ID:_GLN6EJBZ1GCD23RDL_tAxzKvJz-yzPIaKaXa0Bmn7?ecuwZkLH6x1wcmYiV4H5kIRz9LLi

2-0-0
2-0-0

Scale = 1:6.4

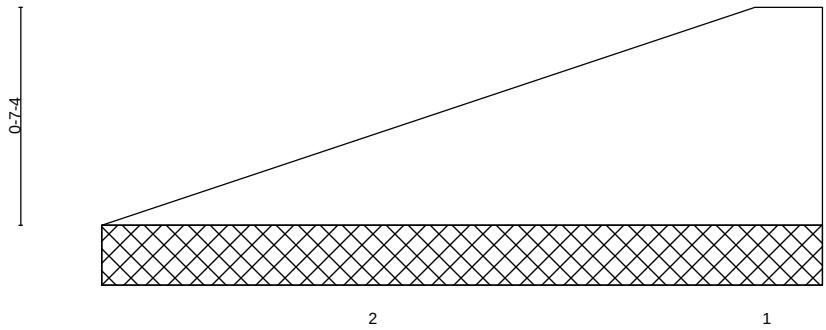

2-0-0
2-0-0

LOADING (psf)		**SPACING-**	2-0-0	**CSI.**		**DEFL.**	in	(loc)	l/defl	L/d	**PLATES**	**GRIP**
TCLL	30.0	Plate Grip DOL	0.90	TC	0.00	Vert(LL)	n/a	-	n/a	999		
TCDL	15.0	Plate Metal DOL	0.90	BC	0.00	Vert(CT)	n/a	-	n/a	999		
BCLL	0.0	Lumber DOL	0.90	WB	0.00	Horz(CT)	0.00		n/a	n/a		
BCDL	10.0	Rep Stress Incr	YES	Matrix-P							Weight: 6 lb	FT = 0%
		Code FBC2020/TPI2014										

22#/0# 22#/0#

LUMBER-
BOT CHORD 2x8 SP No.2

BRACING-
BOT CHORD Rigid ceiling directly applied or 10-0-0 oc bracing.

MiTek recommends that Stabilizers and required cross bracing be installed during truss erection, in accordance with Stabilizer Installation guide.

REACTIONS. (lb/size) 2=11/2-0-0 (min. 0-1-8), 1=11/2-0-0 (min. 0-1-8)
Max Grav 2=22(LC 3), 1=22(LC 3)

FORCES. (lb) - Max. Comp./Max. Ten. - All forces 250 (lb) or less except when shown.

NOTES- (4-5)
1) Building Designer / Project engineer responsible for verifying applied roof live load shown covers rain loading requirements specific to the use of this truss component.
2) Gable requires continuous bottom chord bearing.
3) This truss has been designed for a 10.0 psf bottom chord live load nonconcurrent with any other live loads.
4) All truss to truss connection by TCI are on the Truss Placement plan.
5) ARMANDO R. PEREZ PE. # 28026 Ph: (305) 882-8826

LOAD CASE(S) Standard

Job	Truss	Truss Type	Qty	Ply	12715 ROLLING ROAD DR, PINECREST, FL.
12715	V2A	GABLE	1	1	Job Reference (optional)

Trusscorp Int., 9590 NW 89 AVE, Medley, FL 8.820 s Dec 4 2024 MiTek Industries, Inc. Thu Jun 5 12:45:07 2025 Page 1
ID:_GLN6EJBZ1GCD23RDL_tAxzKvJz-uMW3_0bo6dRU1R80kJz1pmMSQrc2ESCoYbaqNJz9LLg

2-0-0
2-0-0

Scale = 1:5.5

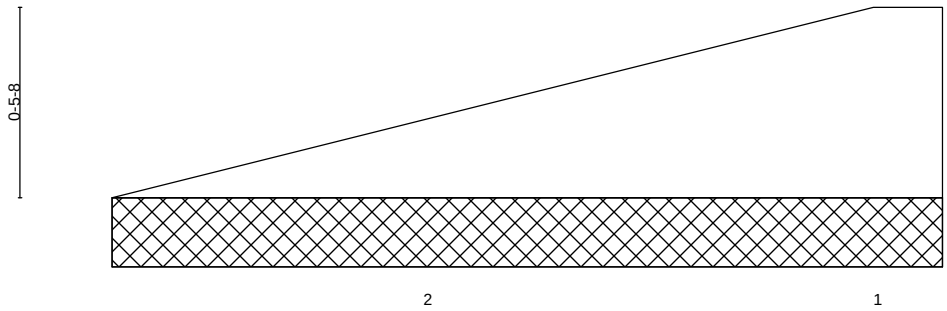

2-0-0
2-0-0

LOADING (psf)		SPACING-	2-0-0	CSI.		DEFL.	in	(loc)	l/defl	L/d	PLATES	GRIP
TCLL	30.0	Plate Grip DOL	0.90	TC	0.00	Vert(LL)	n/a	-	n/a	999		
TCDL	15.0	Plate Metal DOL	0.90	BC	0.01	Vert(CT)	n/a	-	n/a	999		
BCLL	0.0	Lumber DOL	0.90	WB	0.00	Horz(CT)	0.00		n/a	n/a		
BCDL	10.0	Rep Stress Incr	YES	Matrix-P								
		Code FBC2020/TPI2014										

22#/0# 22#/0#
Weight: 5 lb FT = 0%

LUMBER-
BOT CHORD 2x6 SP No.2

BRACING-
BOT CHORD Rigid ceiling directly applied or 10-0-0 oc bracing.

MiTek recommends that Stabilizers and required cross bracing be installed during truss erection, in accordance with Stabilizer Installation guide.

REACTIONS. (lb/size) 2=11/2-0-0 (min. 0-1-8), 1=11/2-0-0 (min. 0-1-8)
Max Grav 2=22(LC 3), 1=22(LC 3)

FORCES. (lb) - Max. Comp./Max. Ten. - All forces 250 (lb) or less except when shown.

NOTES- (4-5)
1) Building Designer / Project engineer responsible for verifying applied roof live load shown covers rain loading requirements specific to the use of this truss component.
2) Gable requires continuous bottom chord bearing.
3) This truss has been designed for a 10.0 psf bottom chord live load nonconcurrent with any other live loads.
4) All truss to truss connection by TCI are on the Truss Placement plan.
5) ARMANDO R. PEREZ PE. # 28026 Ph: (305) 882-8826

LOAD CASE(S) Standard

Job	Truss	Truss Type	Qty	Ply	12715 ROLLING ROAD DR, PINECREST, FL.
12715	V4	GABLE	2	1	Job Reference (optional)

Trusscorp Int., 9590 NW 89 AVE, Medley, FL 8.820 s Dec 4 2024 MiTek Industries, Inc. Thu Jun 5 12:45:08 2025 Page 1
ID:_GLN6EJBZ1GCD23RDL_tAxzKvJz-MY4RCMcQsxZKeajCH1UGLzudAEy1zvRxmEJOvmz9LLf

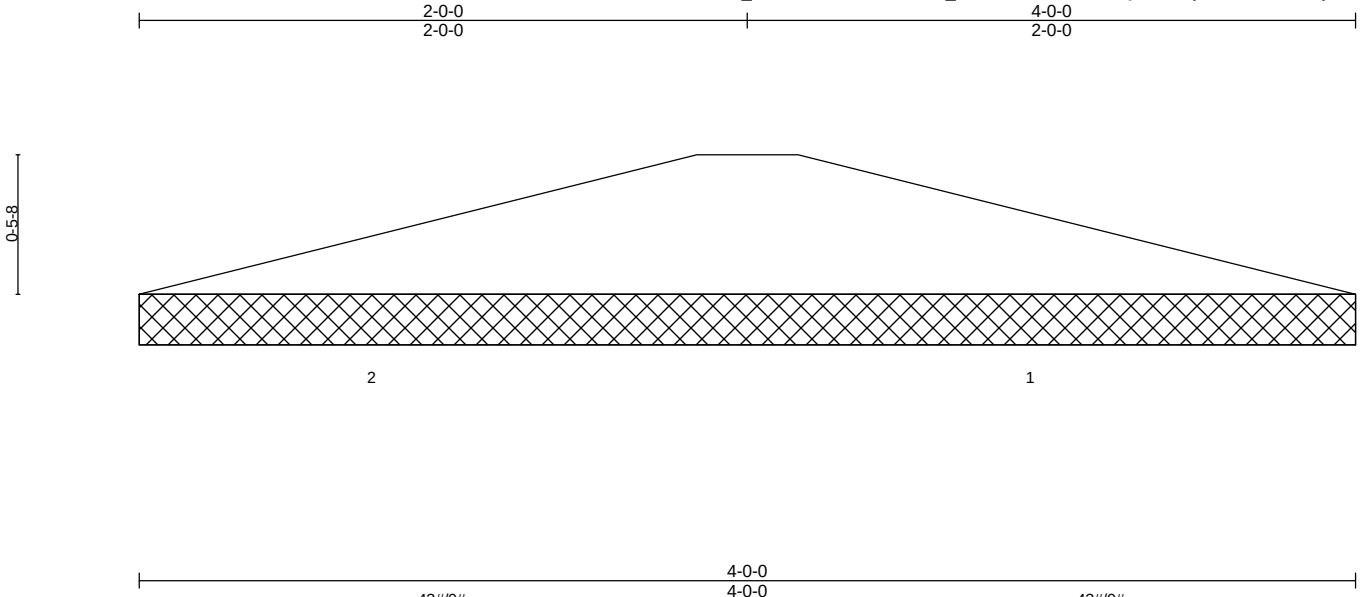

LOADING (psf)		SPACING-	2-0-0	CSI.		DEFL.	in	(loc)	l/defl	L/d	PLATES	GRIP
TCLL	30.0	Plate Grip DOL	0.90	TC	0.00	Vert(LL)	n/a	-	n/a	999		
TCDL	15.0	Plate Metal DOL	0.90	BC	0.02	Vert(CT)	n/a	-	n/a	999		
BCLL	0.0	Lumber DOL	0.90	WB	0.00	Horz(CT)	0.00		n/a	n/a		
BCDL	10.0	Rep Stress Incr	YES	Matrix-P							Weight: 9 lb	FT = 0%
		Code FBC2020/TPI2014										

LUMBER-
BOT CHORD 2x6 SP No.2

BRACING-
BOT CHORD Rigid ceiling directly applied or 10-0-0 oc bracing.

MiTek recommends that Stabilizers and required cross bracing be installed during truss erection, in accordance with Stabilizer Installation guide.

REACTIONS. (lb/size) 2=22/4-0-0 (min. 0-1-8), 1=22/4-0-0 (min. 0-1-8)
Max Grav 2=43(LC 3), 1=43(LC 3)

FORCES. (lb) - Max. Comp./Max. Ten. - All forces 250 (lb) or less except when shown.

NOTES- (4-5)
1) Building Designer / Project engineer responsible for verifying applied roof live load shown covers rain loading requirements specific to the use of this truss component.
2) Gable requires continuous bottom chord bearing.
3) This truss has been designed for a 10.0 psf bottom chord live load nonconcurrent with any other live loads.
4) All truss to truss connection by TCI are on the Truss Placement plan.
5) ARMANDO R. PEREZ PE. # 28026 Ph: (305) 882-8826

LOAD CASE(S) Standard

Job	Truss	Truss Type	Qty	Ply	12715 ROLLING ROAD DR, PINECREST, FL.
12715	V4A	Valley	4	1	Job Reference (optional)

Trusscorp Int., 9590 NW 89 AVE, Medley, FL — 8.820 s Dec 4 2024 MiTek Industries, Inc. Thu Jun 5 12:45:10 2025 Page 1

ID:_GLN6EJBZ1GCD23RDL_tAxzKvJz-JxCBd2dgOYp2uutbPRWkRO_t82cHRpxEEYoU_ez9LLd

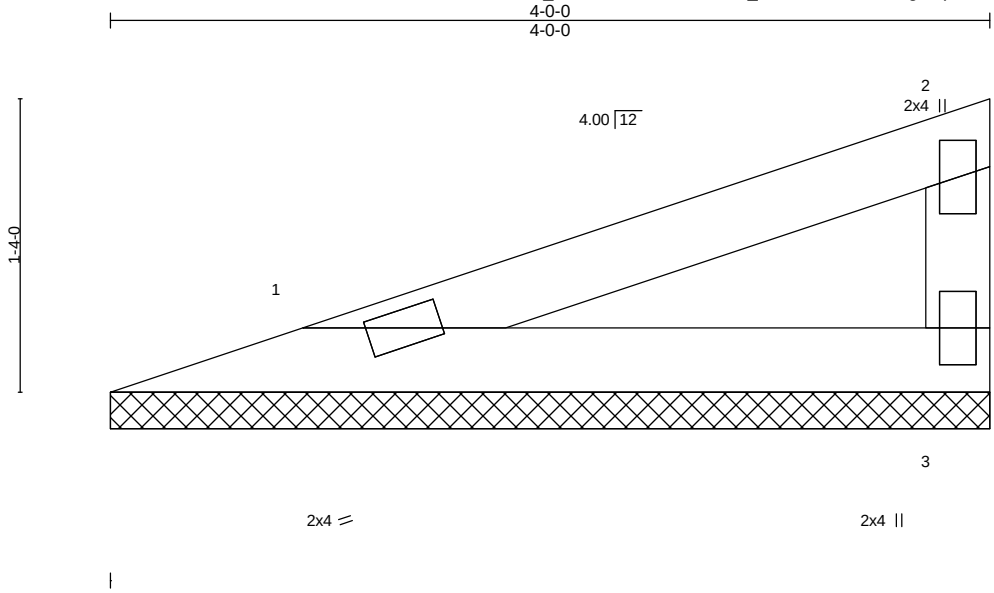

LOADING (psf)		SPACING-	2-0-0	CSI.		DEFL.	in	(loc)	l/defl	L/d	PLATES	GRIP
TCLL	30.0	Plate Grip DOL	1.33	TC	0.35	Vert(LL)	n/a	-	n/a	999	MT20	244/190
TCDL	15.0	Lumber DOL	1.33	BC	0.10	Vert(CT)	n/a	-	n/a	999		
BCLL	0.0	Rep Stress Incr	YES	WB	0.00	Horz(CT)	0.00		n/a	n/a		
BCDL	10.0	Code FBC2020/TPI2014		Matrix-P							Weight: 12 lb	FT = 0%

LUMBER-
TOP CHORD 2x4 SP No.2
BOT CHORD 2x4 SP No.2
WEBS 2x4 SP No.3

BRACING-
TOP CHORD Structural wood sheathing directly applied or 4-0-0 oc purlins, except end verticals.
BOT CHORD Rigid ceiling directly applied or 10-0-0 oc bracing.

MiTek recommends that Stabilizers and required cross bracing be installed during truss erection, in accordance with Stabilizer Installation guide.

REACTIONS. (lb/size) 1=163/4-0-0 (min. 0-1-8), 3=163/4-0-0 (min. 0-1-8)
Max Horz 1=176(LC 4)
Max Uplift1=-205(LC 4), 3=-264(LC 4)
Max Grav 1=163(LC 5), 3=186(LC 5)

FORCES. (lb) - Max. Comp./Max. Ten. - All forces 250 (lb) or less except when shown.
TOP CHORD 2-3=-156/278

NOTES- (7-8)
1) Unbalanced roof live loads have been considered for this design.
2) Wind: ASCE 7-16; Vult=175mph (3-second gust) Vasd=136mph; HVHZ; TCDL=5.0psf; BCDL=5.0psf; h=28ft; Cat. II; Exp C; Encl., GCpi=0.18; C-C Exterior(2E); Lumber DOL=1.60 plate grip DOL=1.60
3) Building Designer / Project engineer responsible for verifying applied roof live load shown covers rain loading requirements specific to the use of this truss component.
4) Gable requires continuous bottom chord bearing.
5) This truss has been designed for a 10.0 psf bottom chord live load nonconcurrent with any other live loads.
6) Provide mechanical connection (by others) of truss to bearing plate capable of withstanding 205 lb uplift at joint 1 and 264 lb uplift at joint 3.
7) All truss to truss connection by TCI are on the Truss Placement plan.
8) ARMANDO R. PEREZ PE. # 28026 Ph: (305) 882-8826

LOAD CASE(S) Standard

Job	Truss	Truss Type	Qty	Ply	12715 ROLLING ROAD DR, PINECREST, FL.
12715	V4B	Valley	1	1	Job Reference (optional)

Trusscorp Int., 9590 NW 89 AVE, Medley, FL 8.820 s Dec 4 2024 MiTek Industries, Inc. Thu Jun 5 12:45:11 2025 Page 1
ID:_GLN6EJBZ1GCD23RDL_tAxzKvJz-n7mZqOeI9sxvV2Snz91zzcW3DSyqAGBNTCY2W5z9LLc

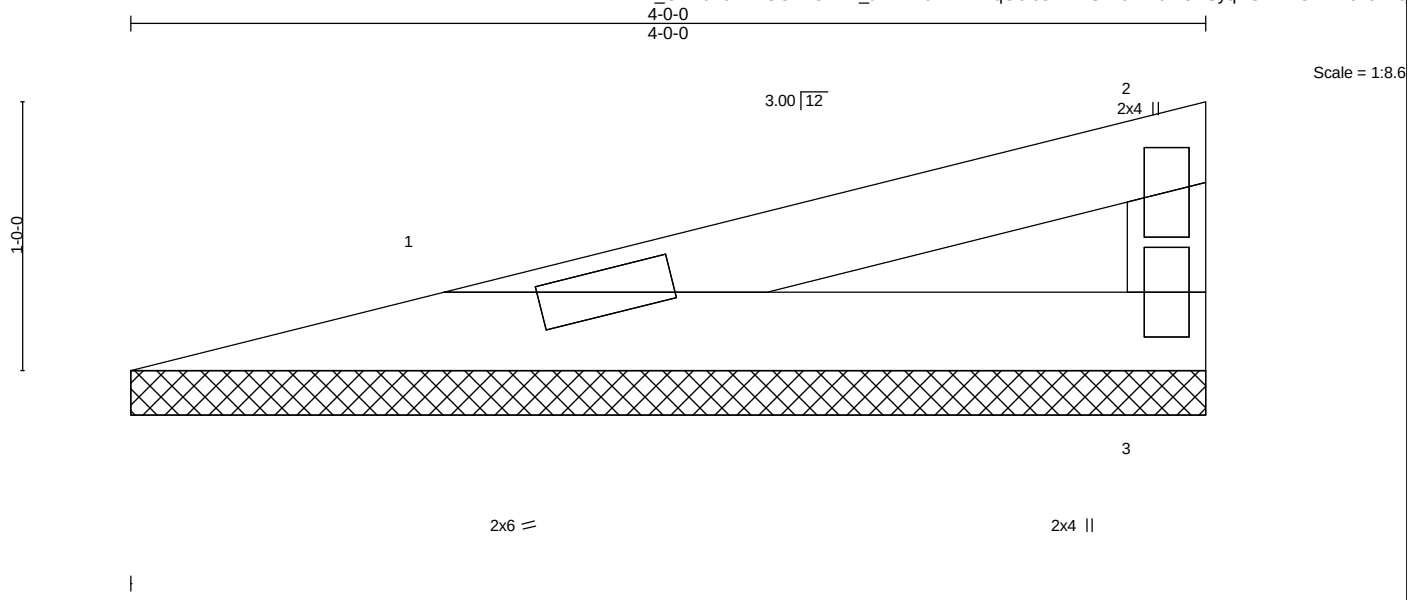

LOADING (psf)		SPACING-	2-0-0	CSI.		DEFL.	in	(loc)	l/defl	L/d	PLATES	GRIP
TCLL	30.0	Plate Grip DOL	1.33	TC	0.27	Vert(LL)	n/a	-	n/a	999	MT20	244/190
TCDL	15.0	Lumber DOL	1.33	BC	0.08	Vert(CT)	n/a	-	n/a	999		
BCLL	0.0	Rep Stress Incr	YES	WB	0.00	Horz(CT)	0.00		n/a	n/a		
BCDL	10.0	Code FBC2020/TPI2014		Matrix-P							Weight: 11 lb	FT = 0%

LUMBER-
TOP CHORD 2x4 SP No.2
BOT CHORD 2x4 SP No.2
WEBS 2x4 SP No.3

BRACING-
TOP CHORD Structural wood sheathing directly applied or 4-0-0 oc purlins, except end verticals.
BOT CHORD Rigid ceiling directly applied or 10-0-0 oc bracing.

MiTek recommends that Stabilizers and required cross bracing be installed during truss erection, in accordance with Stabilizer Installation guide.

REACTIONS. (lb/size) 1=147/4-0-0 (min. 0-1-8), 3=147/4-0-0 (min. 0-1-8)
Max Horz 1=119(LC 4)
Max Uplift1=-197(LC 4), 3=-226(LC 4)
Max Grav 1=152(LC 5), 3=163(LC 5)

FORCES. (lb) - Max. Comp./Max. Ten. - All forces 250 (lb) or less except when shown.

NOTES- (7-8)
1) Unbalanced roof live loads have been considered for this design.
2) Wind: ASCE 7-16; Vult=175mph (3-second gust) Vasd=136mph; HVHZ; TCDL=5.0psf; BCDL=5.0psf; h=28ft; Cat. II; Exp C; Encl., GCpi=0.18; C-C Exterior(2E); Lumber DOL=1.60 plate grip DOL=1.60
3) Building Designer / Project engineer responsible for verifying applied roof live load shown covers rain loading requirements specific to the use of this truss component.
4) Gable requires continuous bottom chord bearing.
5) This truss has been designed for a 10.0 psf bottom chord live load nonconcurrent with any other live loads.
6) Provide mechanical connection (by others) of truss to bearing plate capable of withstanding 197 lb uplift at joint 1 and 226 lb uplift at joint 3.
7) All truss to truss connection by TCI are on the Truss Placement plan.
8) ARMANDO R. PEREZ PE. # 28026 Ph: (305) 882-8826

LOAD CASE(S) Standard

Job	Truss	Truss Type	Qty	Ply	12715 ROLLING ROAD DR, PINECREST, FL.
12715	V4C	VALLEY	1	1	Job Reference (optional)

Trusscorp Int., 9590 NW 89 AVE, Medley, FL

8.820 s Dec 4 2024 MiTek Industries, Inc. Thu Jun 5 12:45:13 2025 Page 1
ID:_GLN6EJBZ1GCD23RDL_tAxzKvJz-jWuKF3gYhTBdlMcA4a4R21cTvFfDe9hgwW19azz9LLa

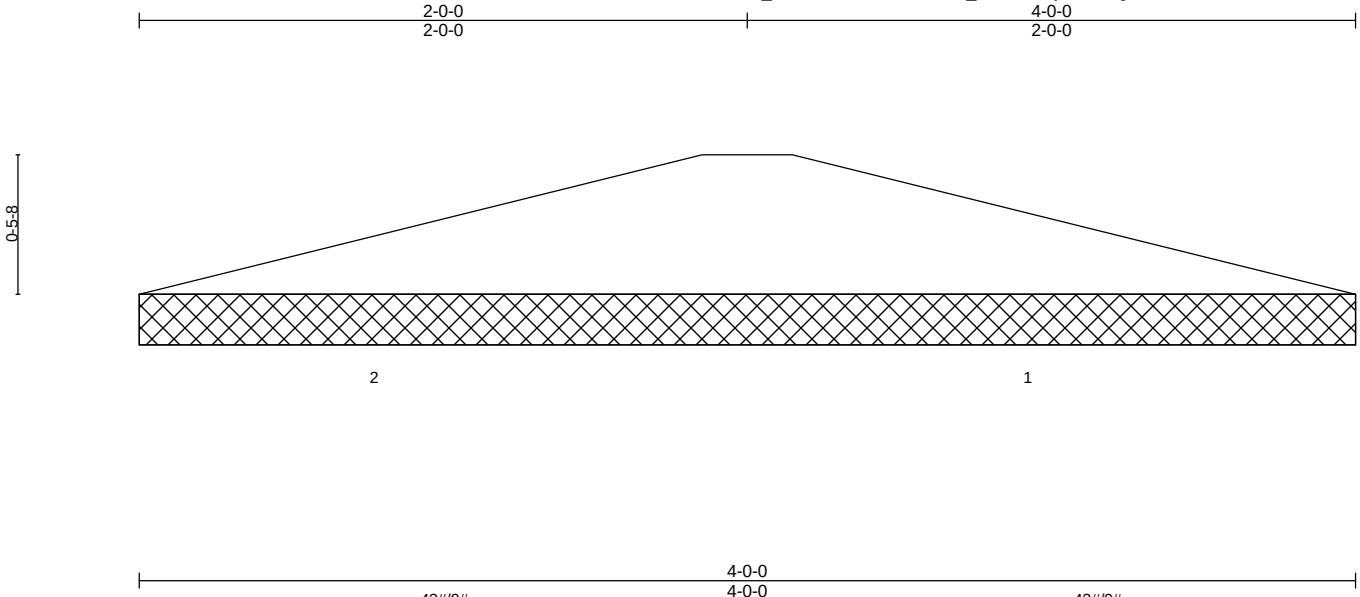

LOADING (psf)		**SPACING-** 2-0-0	**CSI.**	**DEFL.** in (loc) l/defl L/d	**PLATES** **GRIP**
TCLL	30.0	Plate Grip DOL 0.90	TC 0.00	Vert(LL) n/a - n/a 999	
TCDL	15.0	Plate Metal DOL 0.90	BC 0.02	Vert(CT) n/a - n/a 999	
BCLL	0.0	Lumber DOL 0.90	WB 0.00	Horz(CT) 0.00 n/a n/a	
BCDL	10.0	Rep Stress Incr YES	Matrix-P		Weight: 9 lb FT = 0%
		Code FBC2020/TPI2014			

LUMBER-
BOT CHORD 2x6 SP No.2

BRACING-
BOT CHORD Rigid ceiling directly applied or 10-0-0 oc bracing.

MiTek recommends that Stabilizers and required cross bracing be installed during truss erection, in accordance with Stabilizer Installation guide.

REACTIONS. (lb/size) 2=21/4-0-0 (min. 0-1-8), 1=21/4-0-0 (min. 0-1-8)
Max Grav 2=43(LC 3), 1=43(LC 3)

FORCES. (lb) - Max. Comp./Max. Ten. - All forces 250 (lb) or less except when shown.

NOTES- (4-5)
1) Building Designer / Project engineer responsible for verifying applied roof live load shown covers rain loading requirements specific to the use of this truss component.
2) Gable requires continuous bottom chord bearing.
3) This truss has been designed for a 10.0 psf bottom chord live load nonconcurrent with any other live loads.
4) All truss to truss connection by TCI are on the Truss Placement plan.
5) ARMANDO R. PEREZ PE. # 28026 Ph: (305) 882-8826

LOAD CASE(S) Standard

Job	Truss	Truss Type	Qty	Ply	12715 ROLLING ROAD DR, PINECREST, FL.
12715	V6	VALLEY	3	1	Job Reference (optional)

Trusscorp Int., 9590 NW 89 AVE, Medley, FL

8.820 s Dec 4 2024 MiTek Industries, Inc. Thu Jun 5 12:45:14 2025 Page 1
ID:_GLN6EJBZ1GCD23RDL_tAxzKvJz-BiRiSPhBSnKUMWBMeHbgbE8SUfx_Ncxq9Ami7Pz9LLZ

Scale = 1:14.7

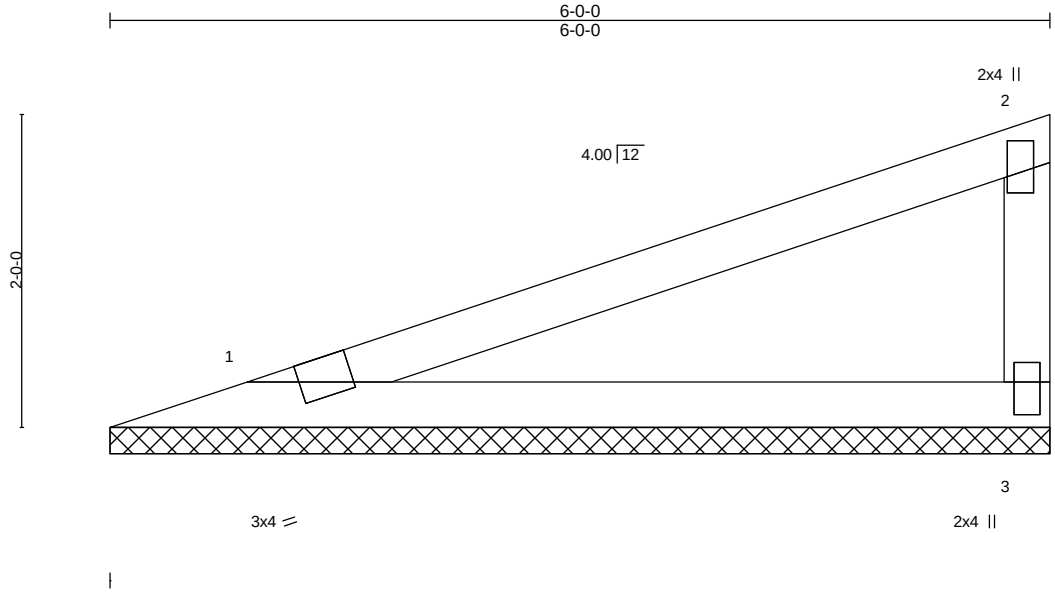

Plate Offsets (X,Y)-- [1:0-3-12,Edge], [2:0-2-13,0-0-4], [3:0-2-8,0-1-0]

LOADING (psf)		**SPACING-** 2-0-0		**CSI.**		**DEFL.**	in	(loc)	l/defl	L/d	**PLATES**	**GRIP**
TCLL	30.0	Plate Grip DOL	1.33	TC	0.78	Vert(LL)	n/a	-	n/a	999	MT20	244/190
TCDL	15.0	Lumber DOL	1.33	BC	0.31	Vert(CT)	n/a	-	n/a	999		
BCLL	0.0	Rep Stress Incr	YES	WB	0.00	Horz(CT)	0.00		n/a	n/a		
BCDL	10.0	Code FBC2020/TPI2014		Matrix-P							Weight: 19 lb	FT = 0%

LUMBER-
TOP CHORD 2x4 SP No.1
BOT CHORD 2x4 SP No.2
WEBS 2x4 SP No.3

BRACING-
TOP CHORD Structural wood sheathing directly applied or 6-0-0 oc purlins, except end verticals.
BOT CHORD Rigid ceiling directly applied or 10-0-0 oc bracing.

MiTek recommends that Stabilizers and required cross bracing be installed during truss erection, in accordance with Stabilizer Installation guide.

REACTIONS. (lb/size) 1=273/6-0-0 (min. 0-1-8), 3=273/6-0-0 (min. 0-1-8)
Max Horz 1=288(LC 4)
Max Uplift1=-334(LC 4), 3=-430(LC 4)
Max Grav 1=273(LC 1), 3=305(LC 5)

FORCES. (lb) - Max. Comp./Max. Ten. - All forces 250 (lb) or less except when shown.
TOP CHORD 2-3=-255/455

NOTES- (7-8)
1) Unbalanced roof live loads have been considered for this design.
2) Wind: ASCE 7-16; Vult=175mph (3-second gust) Vasd=136mph; HVHZ; TCDL=5.0psf; BCDL=5.0psf; h=28ft; Cat. II; Exp C; Encl., GCpi=0.18; C-C Exterior(2E); Lumber DOL=1.60 plate grip DOL=1.60
3) Building Designer / Project engineer responsible for verifying applied roof live load shown covers rain loading requirements specific to the use of this truss component.
4) Gable requires continuous bottom chord bearing.
5) This truss has been designed for a 10.0 psf bottom chord live load nonconcurrent with any other live loads.
6) Provide mechanical connection (by others) of truss to bearing plate capable of withstanding 334 lb uplift at joint 1 and 430 lb uplift at joint 3.
7) All truss to truss connection by TCI are on the Truss Placement plan.
8) ARMANDO R. PEREZ PE. # 28026 Ph: (305) 882-8826

LOAD CASE(S) Standard

Job	Truss	Truss Type	Qty	Ply	12715 ROLLING ROAD DR, PINECREST, FL.
12715	V6A	Valley	1	1	Job Reference (optional)

Trusscorp Int., 9590 NW 89 AVE, Medley, FL 8.820 s Dec 4 2024 MiTek Industries, Inc. Thu Jun 5 12:45:16 2025 Page 1
ID:_GLN6EJBZ1GCD23RDL_tAxzKvJz-75ZSt5iR_OaCcpLllid8gfEnJTc1rWQ6cUFpBIz9LLX

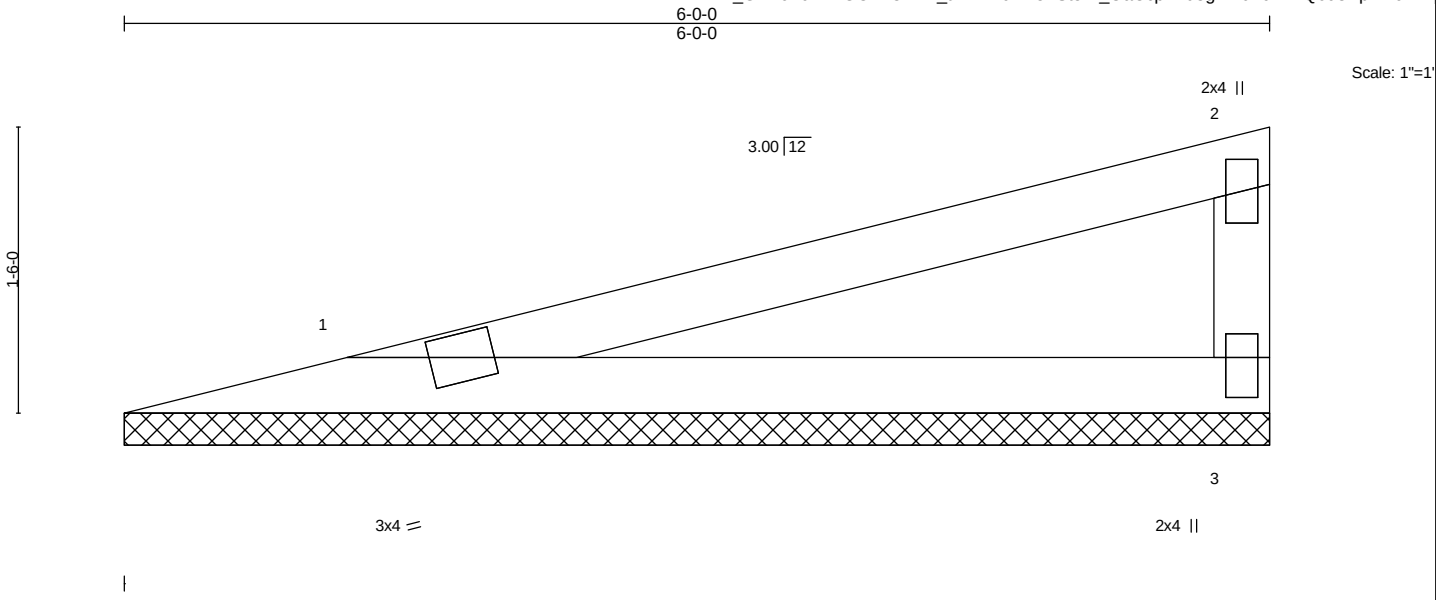

Plate Offsets (X,Y)-- [3:0-2-8,0-1-0]

LOADING (psf)		**SPACING-** 2-0-0		**CSI.**		**DEFL.**	in	(loc)	l/defl	L/d	**PLATES**	**GRIP**
TCLL	30.0	Plate Grip DOL	1.33	TC	0.89	Vert(LL)	n/a	-	n/a	999	MT20	244/190
TCDL	15.0	Lumber DOL	1.33	BC	0.27	Vert(CT)	n/a	-	n/a	999		
BCLL	0.0	Rep Stress Incr	YES	WB	0.00	Horz(CT)	0.00		n/a	n/a		
BCDL	10.0	Code FBC2020/TPI2014		Matrix-P							Weight: 18 lb	FT = 0%

LUMBER-
TOP CHORD 2x4 SP No.2
BOT CHORD 2x4 SP No.2
WEBS 2x4 SP No.3

BRACING-
TOP CHORD Structural wood sheathing directly applied or 2-2-0 oc purlins, except end verticals.
BOT CHORD Rigid ceiling directly applied or 10-0-0 oc bracing.

MiTek recommends that Stabilizers and required cross bracing be installed during truss erection, in accordance with Stabilizer Installation guide.

REACTIONS. (lb/size) 1=257/6-0-0 (min. 0-1-8), 3=257/6-0-0 (min. 0-1-8)
Max Horz 1=203(LC 4)
Max Uplift1=-335(LC 4), 3=-386(LC 4)
Max Grav 1=260(LC 5), 3=280(LC 5)

FORCES. (lb) - Max. Comp./Max. Ten. - All forces 250 (lb) or less except when shown.
TOP CHORD 2-3=-233/409

NOTES- (7-8)
1) Unbalanced roof live loads have been considered for this design.
2) Wind: ASCE 7-16; Vult=175mph (3-second gust) Vasd=136mph; HVHZ; TCDL=5.0psf; BCDL=5.0psf; h=28ft; Cat. II; Exp C; Encl., GCpi=0.18; C-C Exterior(2E); Lumber DOL=1.60 plate grip DOL=1.60
3) Building Designer / Project engineer responsible for verifying applied roof live load shown covers rain loading requirements specific to the use of this truss component.
4) Gable requires continuous bottom chord bearing.
5) This truss has been designed for a 10.0 psf bottom chord live load nonconcurrent with any other live loads.
6) Provide mechanical connection (by others) of truss to bearing plate capable of withstanding 335 lb uplift at joint 1 and 386 lb uplift at joint 3.
7) All truss to truss connection by TCI are on the Truss Placement plan.
8) ARMANDO R. PEREZ PE. # 28026 Ph: (305) 882-8826

LOAD CASE(S) Standard

Job	Truss	Truss Type	Qty	Ply	12715 ROLLING ROAD DR, PINECREST, FL.
12715	V7	Valley	1	1	Job Reference (optional)

Trusscorp Int., 9590 NW 89 AVE, Medley, FL

8.820 s Dec 4 2024 MiTek Industries, Inc. Thu Jun 5 12:45:17 2025 Page 1
ID:_GLN6EJBZ1GCD23RDL_tAxzKvJz-cH7r5Rj3lii3DzvxJQ8NDtm5Dt?3awgGr8?Mjkz9LLW

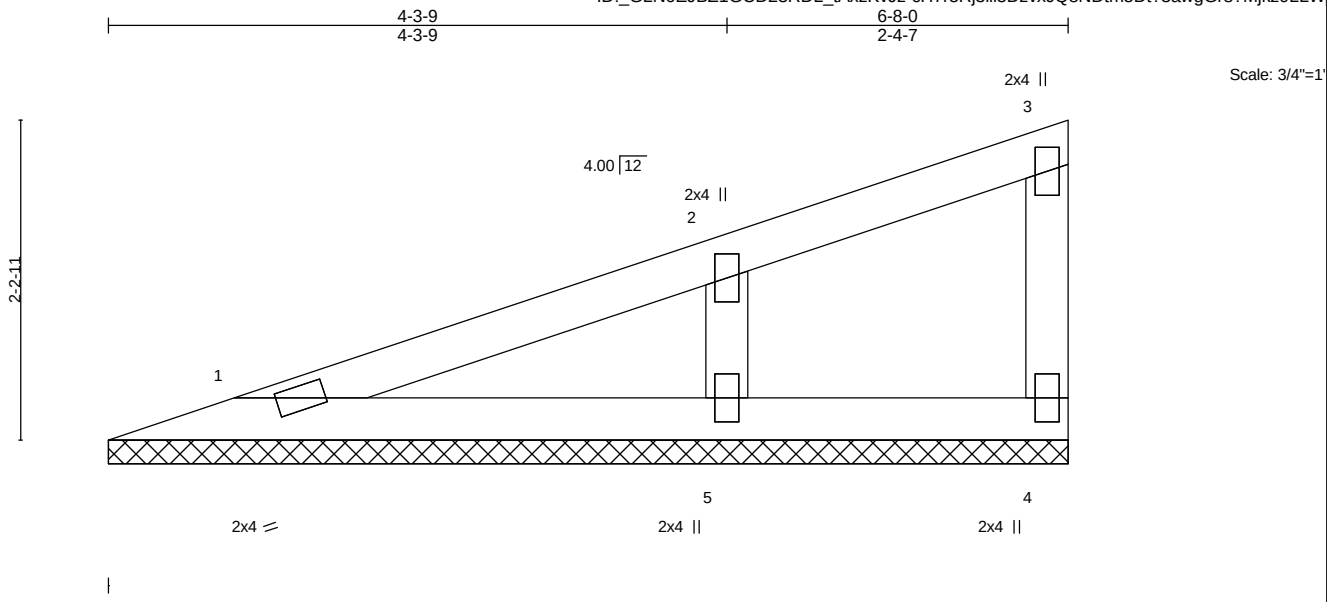

LOADING (psf)		SPACING-	2-0-0	CSI.		DEFL.	in	(loc)	l/defl	L/d	PLATES	GRIP
TCLL	30.0	Plate Grip DOL	1.33	TC	0.30	Vert(LL)	n/a	-	n/a	999	MT20	244/190
TCDL	15.0	Lumber DOL	1.33	BC	0.09	Vert(CT)	n/a	-	n/a	999		
BCLL	0.0	Rep Stress Incr	YES	WB	0.19	Horz(CT)	0.00		n/a	n/a		
BCDL	10.0	Code FBC2020/TPI2014		Matrix-P							Weight: 23 lb	FT = 0%

LUMBER-
TOP CHORD 2x4 SP No.2
BOT CHORD 2x4 SP No.2
WEBS 2x4 SP No.3

BRACING-
TOP CHORD Structural wood sheathing directly applied or 6-0-0 oc purlins, except end verticals.
BOT CHORD Rigid ceiling directly applied or 10-0-0 oc bracing.

MiTek recommends that Stabilizers and required cross bracing be installed during truss erection, in accordance with Stabilizer Installation guide.

REACTIONS. (lb/size) 1=151/6-8-0 (min. 0-1-8), 4=67/6-8-0 (min. 0-1-8), 5=400/6-8-0 (min. 0-1-8)
Max Horz 1=317(LC 4)
Max Uplift1=-125(LC 4), 4=-103(LC 4), 5=-611(LC 4)
Max Grav 1=151(LC 1), 4=73(LC 5), 5=436(LC 5)

FORCES. (lb) - Max. Comp./Max. Ten. - All forces 250 (lb) or less except when shown.
TOP CHORD 1-2=-256/113
WEBS 2-5=-363/647

NOTES- (7-8)
1) Unbalanced roof live loads have been considered for this design.
2) Wind: ASCE 7-16; Vult=175mph (3-second gust) Vasd=136mph; HVHZ; TCDL=5.0psf; BCDL=5.0psf; h=28ft; Cat. II; Exp C; Encl., GCpi=0.18; C-C Exterior(2E); Lumber DOL=1.60 plate grip DOL=1.60
3) Building Designer / Project engineer responsible for verifying applied roof live load shown covers rain loading requirements specific to the use of this truss component.
4) Gable requires continuous bottom chord bearing.
5) This truss has been designed for a 10.0 psf bottom chord live load nonconcurrent with any other live loads.
6) Provide mechanical connection (by others) of truss to bearing plate capable of withstanding 125 lb uplift at joint 1, 103 lb uplift at joint 4 and 611 lb uplift at joint 5.
7) All truss to truss connection by TCI are on the Truss Placement plan.
8) ARMANDO R. PEREZ PE. # 28026 Ph: (305) 882-8826

LOAD CASE(S) Standard

Job	Truss	Truss Type	Qty	Ply	12715 ROLLING ROAD DR, PINECREST, FL.
12715	V8	Valley	2	1	Job Reference (optional)

Trusscorp Int., 9590 NW 89 AVE, Medley, FL

8.820 s Dec 4 2024 MiTek Industries, Inc. Thu Jun 5 12:45:19 2025 Page 1
ID:_GLN6EJBZ1GCD23RDL_tAxzKvJz-YgFbW7kJHJynTH3KRqArIIsPqgc52tAZISUTodz9LLU

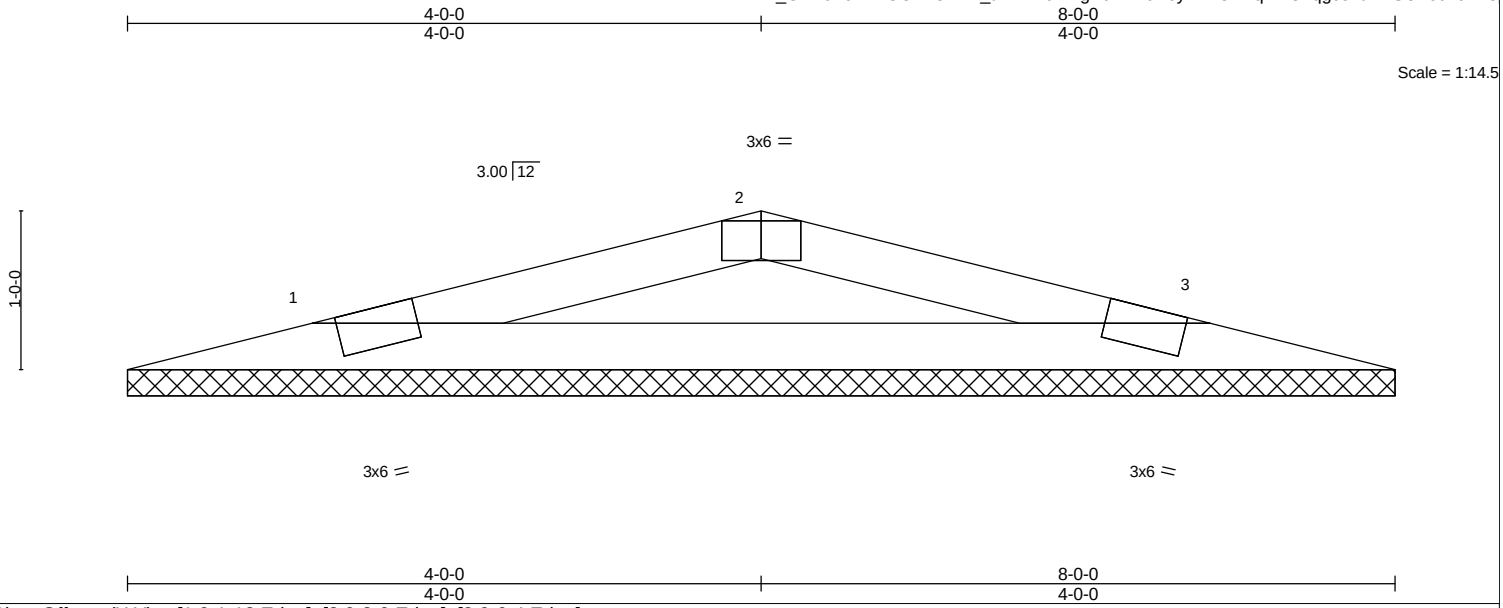

Plate Offsets (X,Y)-- [1:0-1-12,Edge], [2:0-3-0,Edge], [3:0-6-4,Edge]

LOADING (psf)		**SPACING-** 2-0-0		**CSI.**		**DEFL.**	in	(loc)	l/defl	L/d	**PLATES**	**GRIP**
TCLL	30.0	Plate Grip DOL	1.33	TC	0.42	Vert(LL)	n/a	-	n/a	999	MT20	244/190
TCDL	15.0	Lumber DOL	1.33	BC	0.44	Vert(CT)	n/a	-	n/a	999		
BCLL	0.0	Rep Stress Incr	YES	WB	0.00	Horz(CT)	-0.01	3	n/a	n/a		
BCDL	10.0	Code FBC2020/TPI2014		Matrix-P							Weight: 21 lb	FT = 0%

LUMBER-
TOP CHORD 2x4 SP No.2
BOT CHORD 2x4 SP No.2

BRACING-
TOP CHORD Structural wood sheathing directly applied or 6-0-0 oc purlins.
BOT CHORD Rigid ceiling directly applied or 6-5-13 oc bracing.

MiTek recommends that Stabilizers and required cross bracing be installed during truss erection, in accordance with Stabilizer Installation guide.

REACTIONS. (lb/size) 1=310/8-0-0 (min. 0-1-8), 3=310/8-0-0 (min. 0-1-8)
Max Uplift1=-406(LC 4), 3=-406(LC 4)

FORCES. (lb) - Max. Comp./Max. Ten. - All forces 250 (lb) or less except when shown.
TOP CHORD 1-2=-547/897, 2-3=-547/897
BOT CHORD 1-3=-810/507

NOTES- (7-8)
1) Unbalanced roof live loads have been considered for this design.
2) Wind: ASCE 7-16; Vult=175mph (3-second gust) Vasd=136mph; HVHZ; TCDL=5.0psf; BCDL=5.0psf; h=28ft; Cat. II; Exp C; Encl., GCpi=0.18; C-C Exterior(2E); Lumber DOL=1.60 plate grip DOL=1.60
3) Building Designer / Project engineer responsible for verifying applied roof live load shown covers rain loading requirements specific to the use of this truss component.
4) Gable requires continuous bottom chord bearing.
5) This truss has been designed for a 10.0 psf bottom chord live load nonconcurrent with any other live loads.
6) Provide mechanical connection (by others) of truss to bearing plate capable of withstanding 406 lb uplift at joint 1 and 406 lb uplift at joint 3.
7) All truss to truss connection by TCI are on the Truss Placement plan.
8) ARMANDO R. PEREZ PE. # 28026 Ph: (305) 882-8826

LOAD CASE(S) Standard

Job	Truss	Truss Type	Qty	Ply	12715 ROLLING ROAD DR, PINECREST, FL.
12715	V8A	Valley	1	1	Job Reference (optional)

Trusscorp Int., 9590 NW 89 AVE, Medley, FL

8.820 s Dec 4 2024 MiTek Industries, Inc. Thu Jun 5 12:45:20 2025 Page 1
ID:_GLN6EJBZ1GCD23RDL_tAxzKvJz-0spzjSlx2d4d4ReW_Yi4rVObo41NnHHiX6D0K3z9LLT

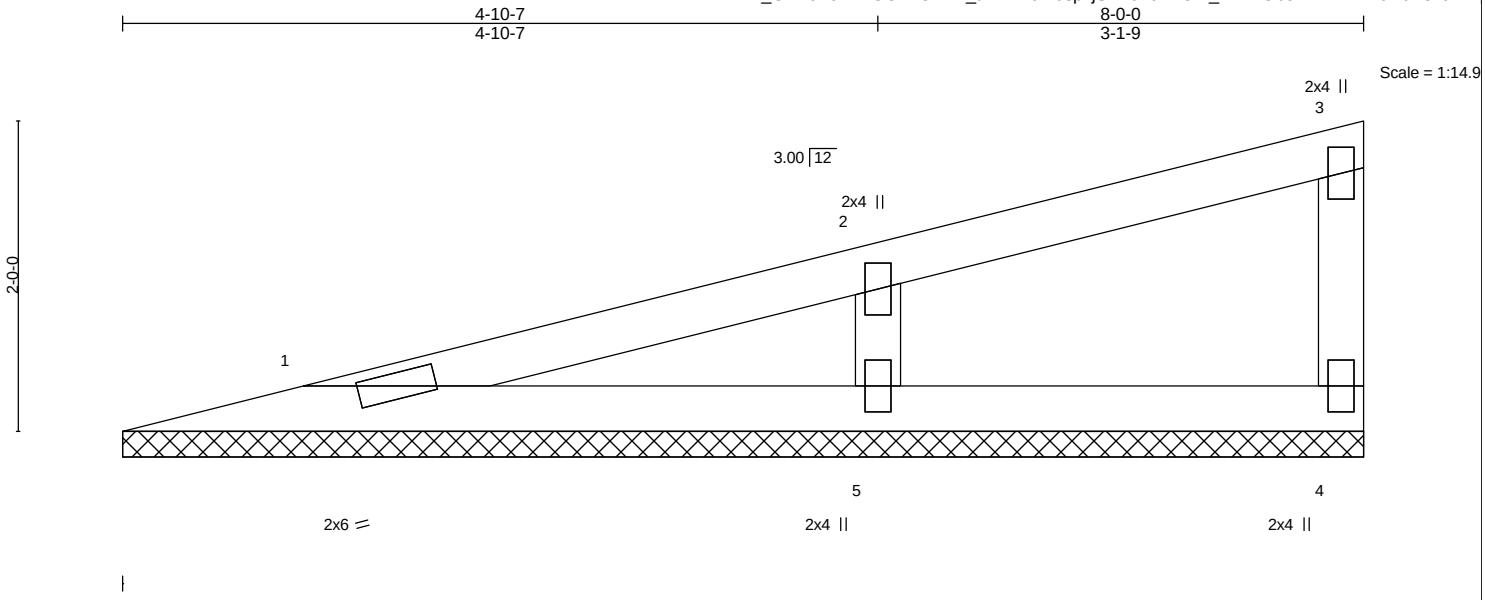

LOADING (psf)		**SPACING-**	2-0-0	**CSI.**		**DEFL.**	in	(loc)	l/defl	L/d	**PLATES**	**GRIP**
TCLL	30.0	Plate Grip DOL	1.33	TC	0.34	Vert(LL)	n/a	-	n/a	999	MT20	244/190
TCDL	15.0	Lumber DOL	1.33	BC	0.11	Vert(CT)	n/a	-	n/a	999		
BCLL	0.0	Rep Stress Incr	YES	WB	0.20	Horz(CT)	0.00		n/a	n/a		
BCDL	10.0	Code FBC2020/TPI2014		Matrix-P							Weight: 25 lb	FT = 0%

LUMBER-
TOP CHORD 2x4 SP No.2
BOT CHORD 2x4 SP No.2
WEBS 2x4 SP No.3

BRACING-
TOP CHORD Structural wood sheathing directly applied or 6-0-0 oc purlins, except end verticals.
BOT CHORD Rigid ceiling directly applied or 10-0-0 oc bracing.

MiTek recommends that Stabilizers and required cross bracing be installed during truss erection, in accordance with Stabilizer Installation guide.

REACTIONS. (lb/size) 1=160/8-0-0 (min. 0-1-8), 4=111/8-0-0 (min. 0-1-8), 5=462/8-0-0 (min. 0-1-8)
Max Horz 1=268(LC 4)
Max Uplift1=-152(LC 4), 4=-153(LC 4), 5=-634(LC 4)
Max Grav 1=160(LC 1), 4=113(LC 5), 5=469(LC 5)

FORCES. (lb) - Max. Comp./Max. Ten. - All forces 250 (lb) or less except when shown.
WEBS 2-5=-385/676

NOTES- (7-8)
1) Unbalanced roof live loads have been considered for this design.
2) Wind: ASCE 7-16; Vult=175mph (3-second gust) Vasd=136mph; HVHZ; TCDL=5.0psf; BCDL=5.0psf; h=28ft; Cat. II; Exp C; Encl., GCpi=0.18; C-C Exterior(2E); Lumber DOL=1.60 plate grip DOL=1.60
3) Building Designer / Project engineer responsible for verifying applied roof live load shown covers rain loading requirements specific to the use of this truss component.
4) Gable requires continuous bottom chord bearing.
5) This truss has been designed for a 10.0 psf bottom chord live load nonconcurrent with any other live loads.
6) Provide mechanical connection (by others) of truss to bearing plate capable of withstanding 152 lb uplift at joint 1, 153 lb uplift at joint 4 and 634 lb uplift at joint 5.
7) All truss to truss connection by TCI are on the Truss Placement plan.
8) ARMANDO R. PEREZ PE. # 28026 Ph: (305) 882-8826

LOAD CASE(S) Standard

Job	Truss	Truss Type	Qty	Ply	12715 ROLLING ROAD DR, PINECREST, FL.
12715	V8B	Valley	1	1	Job Reference (optional)

Trusscorp Int., 9590 NW 89 AVE, Medley, FL

8.820 s Dec 4 2024 MiTek Industries, Inc. Thu Jun 5 12:45:22 2025 Page 1
ID:_GLN6EJBZ1GCD23RDL_tAxzKvJz-yFwk88nCZEKLKkov6zkYwwUy3uiDFBs?_Qi7Pyz9LLR

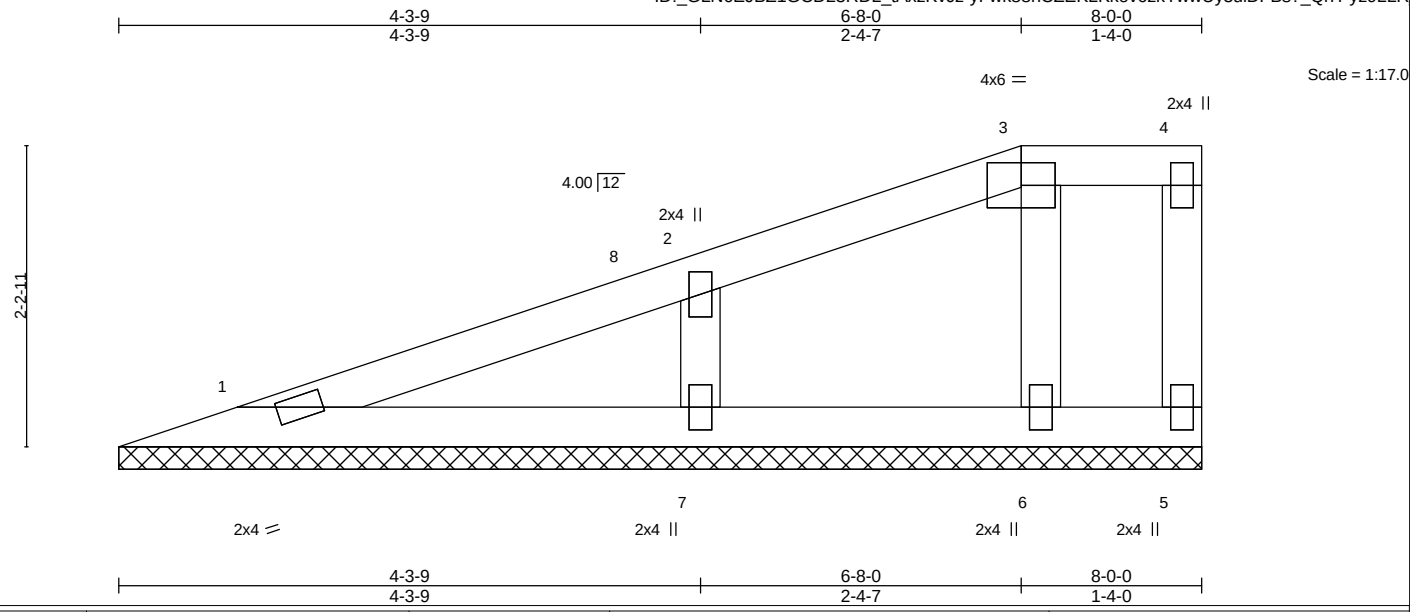

LOADING (psf)		**SPACING-**	2-0-0	**CSI.**		**DEFL.**	in	(loc)	l/defl	L/d	**PLATES**	**GRIP**
TCLL	30.0	Plate Grip DOL	1.33	TC	0.29	Vert(LL)	n/a	-	n/a	999	MT20	244/190
TCDL	15.0	Lumber DOL	1.33	BC	0.09	Vert(CT)	n/a	-	n/a	999		
BCLL	0.0	Rep Stress Incr	YES	WB	0.20	Horz(CT)	-0.00	5	n/a	n/a		
BCDL	10.0	Code FBC2020/TPI2014		Matrix-P							Weight: 29 lb	FT = 0%

LUMBER-
TOP CHORD 2x4 SP No.2
BOT CHORD 2x4 SP No.2
WEBS 2x4 SP No.3

BRACING-
TOP CHORD Structural wood sheathing directly applied or 6-0-0 oc purlins, except end verticals.
BOT CHORD Rigid ceiling directly applied or 10-0-0 oc bracing.

MiTek recommends that Stabilizers and required cross bracing be installed during truss erection, in accordance with Stabilizer Installation guide.

REACTIONS. All bearings 8-0-0.
(lb) - Max Horz 1=327(LC 4)
Max Uplift All uplift 100 lb or less at joint(s) 5 except 1=-112(LC 4), 6=-208(LC 4), 7=-621(LC 4)
Max Grav All reactions 250 lb or less at joint(s) 1, 5, 6 except 7=422(LC 5)

FORCES. (lb) - Max. Comp./Max. Ten. - All forces 250 (lb) or less except when shown.
TOP CHORD 1-8=-253/81
WEBS 2-7=-349/658

NOTES- (8-9)
1) Unbalanced roof live loads have been considered for this design.
2) Wind: ASCE 7-16; Vult=175mph (3-second gust) Vasd=136mph; HVHZ; TCDL=5.0psf; BCDL=5.0psf; h=28ft; Cat. II; Exp C; Encl., GCpi=0.18; C-C Exterior(2E) 0-10-13 to 3-10-13, Exterior(2R) 3-10-13 to 6-8-0, Exterior(2E) 6-8-0 to 7-10-4; Lumber DOL=1.60 plate grip DOL=1.60
3) Building Designer / Project engineer responsible for verifying applied roof live load shown covers rain loading requirements specific to the use of this truss component.
4) Provide adequate drainage to prevent water ponding.
5) Gable requires continuous bottom chord bearing.
6) This truss has been designed for a 10.0 psf bottom chord live load nonconcurrent with any other live loads.
7) Provide mechanical connection (by others) of truss to bearing plate capable of withstanding 100 lb uplift at joint(s) 5 except (jt=lb) 1=112, 6=208, 7=621.
8) All truss to truss connection by TCI are on the Truss Placement plan.
9) ARMANDO R. PEREZ PE. # 28026 Ph: (305) 882-8826

LOAD CASE(S) Standard

Job	Truss	Truss Type	Qty	Ply	12715 ROLLING ROAD DR, PINECREST, FL.
12715	V8C	Valley	1	1	Job Reference (optional)

Trusscorp Int., 9590 NW 89 AVE, Medley, FL

8.820 s Dec 4 2024 MiTek Industries, Inc. Thu Jun 5 12:45:23 2025 Page 1
ID:_GLN6EJBZ1GCD23RDL_tAxzKvJz-QRU6LUnqKYSCxuN5ggFnS805oHzz_h98D4SgxOz9LLQ

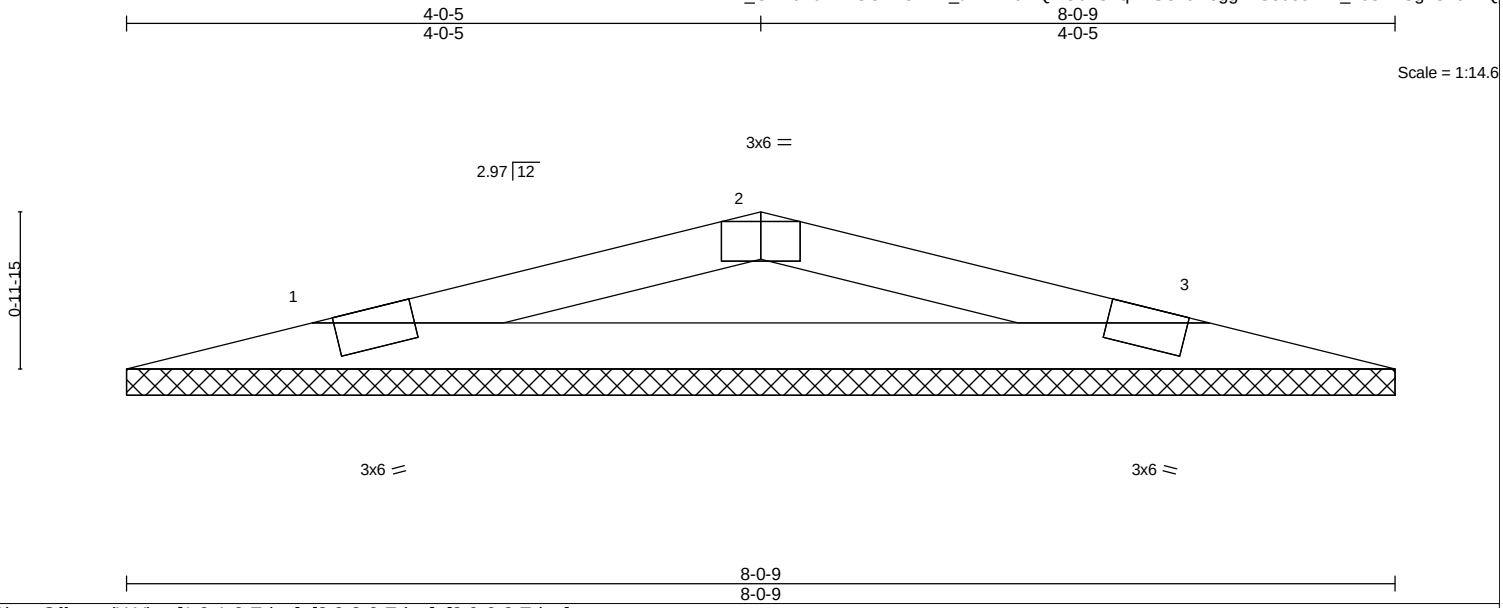

Plate Offsets (X,Y)-- [1:0-1-9,Edge], [2:0-3-0,Edge], [3:0-6-9,Edge]

LOADING (psf)		**SPACING-**	2-0-0	**CSI.**		**DEFL.**	in	(loc)	l/defl	L/d	**PLATES**	**GRIP**
TCLL	30.0	Plate Grip DOL	1.33	TC	0.42	Vert(LL)	n/a	-	n/a	999	MT20	244/190
TCDL	15.0	Lumber DOL	1.33	BC	0.44	Vert(CT)	n/a	-	n/a	999		
BCLL	0.0	Rep Stress Incr	YES	WB	0.00	Horz(CT)	-0.01	3	n/a	n/a		
BCDL	10.0	Code FBC2020/TPI2014		Matrix-P							Weight: 21 lb	FT = 0%

LUMBER-
TOP CHORD 2x4 SP No.2
BOT CHORD 2x4 SP No.2

BRACING-
TOP CHORD Structural wood sheathing directly applied or 6-0-0 oc purlins.
BOT CHORD Rigid ceiling directly applied or 6-5-6 oc bracing.

MiTek recommends that Stabilizers and required cross bracing be installed during truss erection, in accordance with Stabilizer Installation guide.

REACTIONS. (lb/size) 1=311/8-0-9 (min. 0-1-8), 3=311/8-0-9 (min. 0-1-8)
Max Uplift1=-405(LC 4), 3=-405(LC 4)

FORCES. (lb) - Max. Comp./Max. Ten. - All forces 250 (lb) or less except when shown.
TOP CHORD 1-2=-554/904, 2-3=-554/904
BOT CHORD 1-3=-818/514

NOTES- (7-8)
1) Unbalanced roof live loads have been considered for this design.
2) Wind: ASCE 7-16; Vult=175mph (3-second gust) Vasd=136mph; HVHZ; TCDL=5.0psf; BCDL=5.0psf; h=28ft; Cat. II; Exp C; Encl., GCpi=0.18; C-C Exterior(2E); Lumber DOL=1.60 plate grip DOL=1.60
3) Building Designer / Project engineer responsible for verifying applied roof live load shown covers rain loading requirements specific to the use of this truss component.
4) Gable requires continuous bottom chord bearing.
5) This truss has been designed for a 10.0 psf bottom chord live load nonconcurrent with any other live loads.
6) Provide mechanical connection (by others) of truss to bearing plate capable of withstanding 100 lb uplift at joint(s) except (jt=lb) 1=405, 3=405.
7) All truss to truss connection by TCI are on the Truss Placement plan.
8) ARMANDO R. PEREZ PE. # 28026 Ph: (305) 882-8826

LOAD CASE(S) Standard

Job	Truss	Truss Type	Qty	Ply	12715 ROLLING ROAD DR, PINECREST, FL.
12715	V10	Valley	1	1	Job Reference (optional)

Trusscorp Int., 9590 NW 89 AVE, Medley, FL

8.820 s Dec 4 2024 MiTek Industries, Inc. Thu Jun 5 12:45:25 2025 Page 1
ID:_GLN6EJBZ1GCD23RDL_tAxzKvJz-NqcsmAp4s9iwBCXUn5HFYZ6Rd5jxSYDRhOxn?Hz9LLO

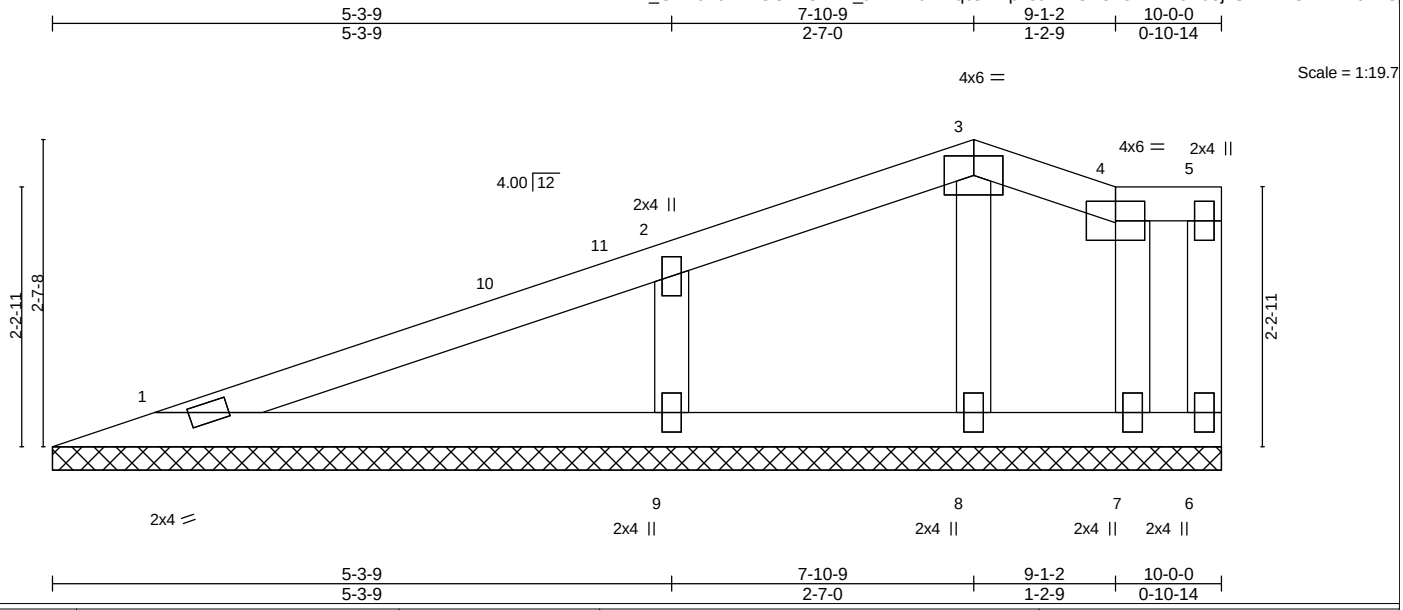

LOADING (psf)		**SPACING-**	2-0-0	**CSI.**		**DEFL.**	in	(loc)	l/defl	L/d	**PLATES**	**GRIP**
TCLL	30.0	Plate Grip DOL	1.33	TC	0.40	Vert(LL)	n/a	-	n/a	999	MT20	244/190
TCDL	15.0	Lumber DOL	1.33	BC	0.15	Vert(CT)	n/a	-	n/a	999		
BCLL	0.0	Rep Stress Incr	YES	WB	0.22	Horz(CT)	-0.00	6	n/a	n/a		
BCDL	10.0	Code FBC2020/TPI2014		Matrix-S							Weight: 39 lb	FT = 0%

LUMBER-
TOP CHORD 2x4 SP No.2
BOT CHORD 2x4 SP No.2
WEBS 2x4 SP No.3

BRACING-
TOP CHORD Structural wood sheathing directly applied or 6-0-0 oc purlins, except end verticals.
BOT CHORD Rigid ceiling directly applied or 10-0-0 oc bracing.

MiTek recommends that Stabilizers and required cross bracing be installed during truss erection, in accordance with Stabilizer Installation guide.

REACTIONS. All bearings 10-0-0.
(lb) - Max Horz 1=322(LC 4)
Max Uplift All uplift 100 lb or less at joint(s) 6 except 1=-156(LC 4), 8=-180(LC 4), 7=-146(LC 4), 9=-733(LC 4)
Max Grav All reactions 250 lb or less at joint(s) 1, 6, 8, 7 except 9=509(LC 9)

FORCES. (lb) - Max. Comp./Max. Ten. - All forces 250 (lb) or less except when shown.
WEBS 2-9=-400/742

NOTES- (8-9)
1) Unbalanced roof live loads have been considered for this design.
2) Wind: ASCE 7-16; Vult=175mph (3-second gust) Vasd=136mph; HVHZ; TCDL=5.0psf; BCDL=5.0psf; h=28ft; Cat. II; Exp C; Encl., GCpi=0.18; C-C Exterior(2E) 0-10-13 to 3-10-13, Interior(1) 3-10-13 to 4-10-9, Exterior(2R) 4-10-9 to 7-10-9, Exterior(2E) 7-10-9 to 9-10-4; Lumber DOL=1.60 plate grip DOL=1.60
3) Building Designer / Project engineer responsible for verifying applied roof live load shown covers rain loading requirements specific to the use of this truss component.
4) Provide adequate drainage to prevent water ponding.
5) Gable requires continuous bottom chord bearing.
6) This truss has been designed for a 10.0 psf bottom chord live load nonconcurrent with any other live loads.
7) Provide mechanical connection (by others) of truss to bearing plate capable of withstanding 100 lb uplift at joint(s) 6 except (jt=lb) 1=156, 8=180, 7=146, 9=733.
8) All truss to truss connection by TCI are on the Truss Placement plan.
9) ARMANDO R. PEREZ PE. # 28026 Ph: (305) 882-8826

LOAD CASE(S) Standard

Job	Truss	Truss Type	Qty	Ply	12715 ROLLING ROAD DR, PINECREST, FL.
12715	V10A	Valley	1	1	Job Reference (optional)

Trusscorp Int., 9590 NW 89 AVE, Medley, FL

8.820 s Dec 4 2024 MiTek Industries, Inc. Thu Jun 5 12:45:27 2025 Page 1
ID:_GLN6EJBZ1GCD23RDL_tAxzKvJz-JCkdBsrKOmyeQVgsvWKjd_BlwvPwwSfk8iQu49z9LLM

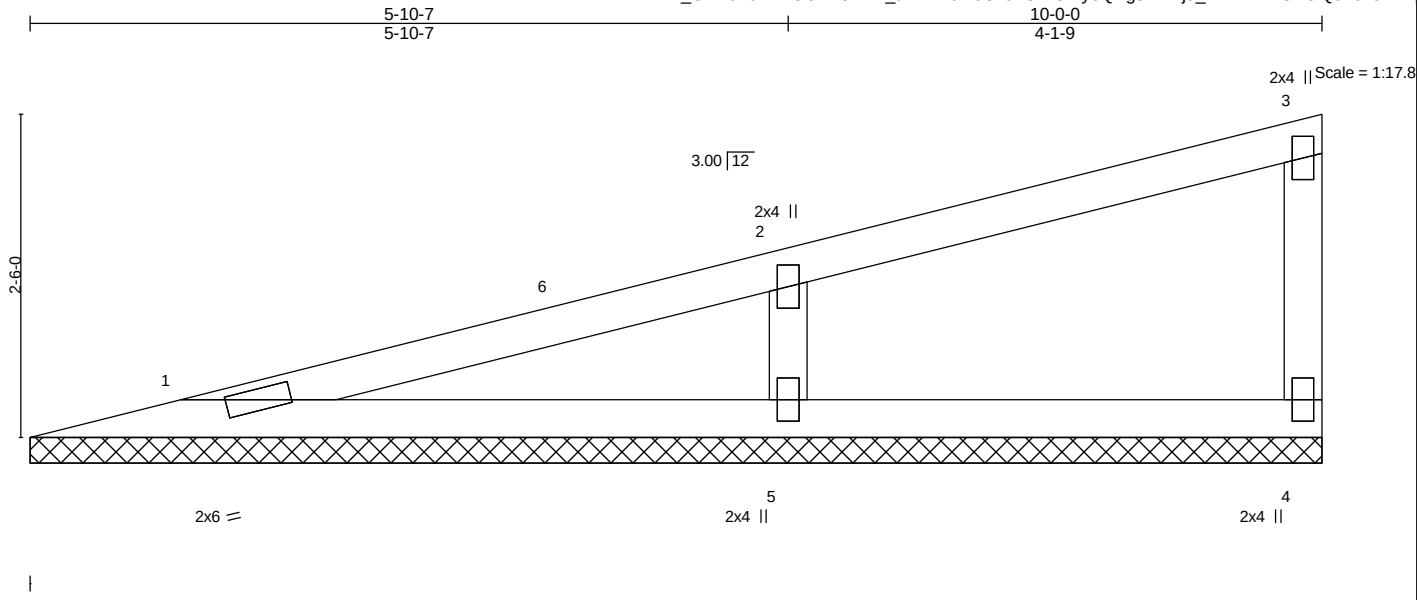

LOADING (psf)		**SPACING-**	2-0-0	**CSI.**		**DEFL.**	in	(loc)	l/defl	L/d	**PLATES**	**GRIP**
TCLL	30.0	Plate Grip DOL	1.33	TC	0.48	Vert(LL)	n/a	-	n/a	999	MT20	244/190
TCDL	15.0	Lumber DOL	1.33	BC	0.18	Vert(CT)	n/a	-	n/a	999		
BCLL	0.0	Rep Stress Incr	YES	WB	0.22	Horz(CT)	-0.00	4	n/a	n/a		
BCDL	10.0	Code FBC2020/TPI2014		Matrix-S							Weight: 33 lb	FT = 0%

LUMBER-
TOP CHORD 2x4 SP No.2
BOT CHORD 2x4 SP No.2
WEBS 2x4 SP No.3

BRACING-
TOP CHORD Structural wood sheathing directly applied or 6-0-0 oc purlins, except end verticals.
BOT CHORD Rigid ceiling directly applied or 10-0-0 oc bracing.

MiTek recommends that Stabilizers and required cross bracing be installed during truss erection, in accordance with Stabilizer Installation guide.

REACTIONS. (lb/size) 1=208/10-0-0 (min. 0-1-8), 4=160/10-0-0 (min. 0-1-8), 5=586/10-0-0 (min. 0-1-8)
Max Horz 1=327(LC 4)
Max Uplift1=-175(LC 4), 4=-240(LC 4), 5=-721(LC 4)

FORCES. (lb) - Max. Comp./Max. Ten. - All forces 250 (lb) or less except when shown.
TOP CHORD 3-4=-133/258
WEBS 2-5=-467/751

NOTES- (7-8)
1) Unbalanced roof live loads have been considered for this design.
2) Wind: ASCE 7-16; Vult=175mph (3-second gust) Vasd=136mph; HVHZ; TCDL=5.0psf; BCDL=5.0psf; h=28ft; Cat. II; Exp C; Encl., GCpi=0.18; C-C Exterior(2E) 1-2-3 to 4-2-3, Interior(1) 4-2-3 to 5-7-5, Exterior(2R) 5-7-5 to 9-10-4; Lumber DOL=1.60 plate grip DOL=1.60
3) Building Designer / Project engineer responsible for verifying applied roof live load shown covers rain loading requirements specific to the use of this truss component.
4) Gable requires continuous bottom chord bearing.
5) This truss has been designed for a 10.0 psf bottom chord live load nonconcurrent with any other live loads.
6) Provide mechanical connection (by others) of truss to bearing plate capable of withstanding 100 lb uplift at joint(s) except (jt=lb) 1=175, 4=240, 5=721.
7) All truss to truss connection by TCI are on the Truss Placement plan.
8) ARMANDO R. PEREZ PE. # 28026 Ph: (305) 882-8826

LOAD CASE(S) Standard

Job	Truss	Truss Type	Qty	Ply	12715 ROLLING ROAD DR, PINECREST, FL.
12715	V12	Valley	1	1	Job Reference (optional)

Trusscorp Int., 9590 NW 89 AVE, Medley, FL

8.820 s Dec 4 2024 MiTek Industries, Inc. Thu Jun 5 12:45:28 2025 Page 1
ID:_GLN6EJBZ1GCD23RDL_tAxzKvJz-nPI?PCrz944V2fF2SDry9Bjv6IkNfv_tNM9Rccz9LLL

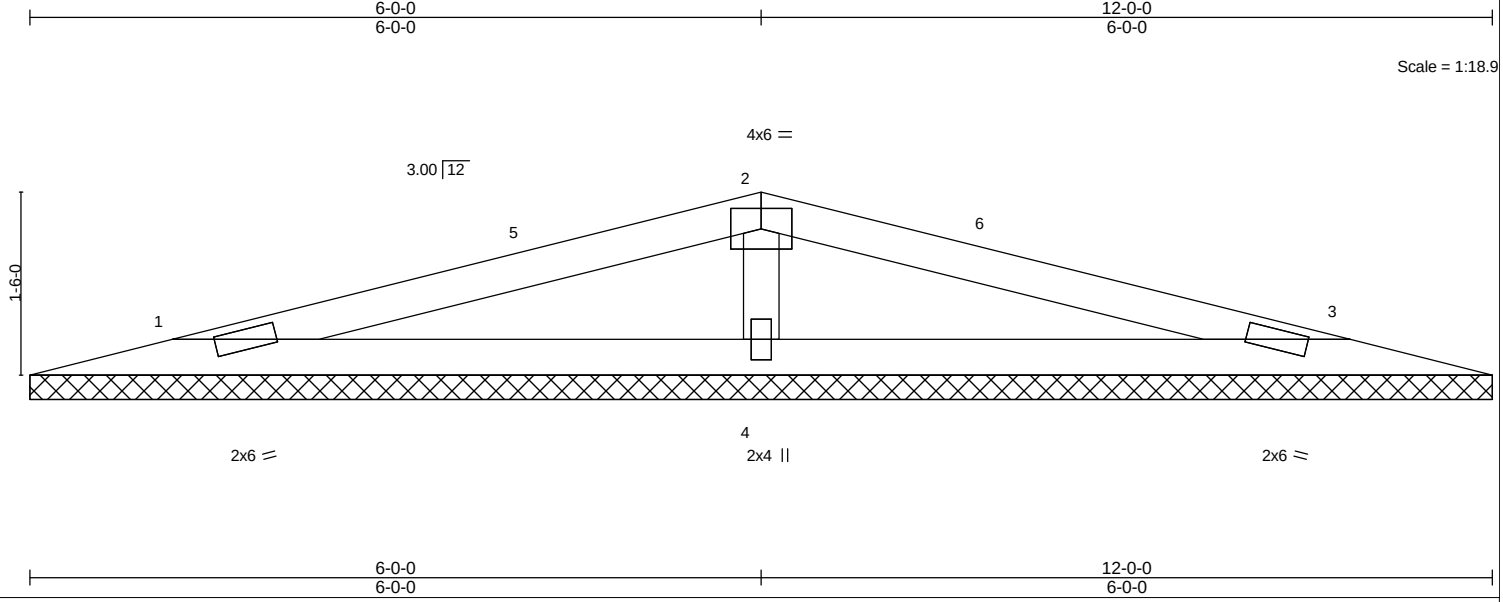

LOADING (psf)		**SPACING-**	2-0-0	**CSI.**		**DEFL.**	in	(loc)	l/defl	L/d	**PLATES**	**GRIP**
TCLL	30.0	Plate Grip DOL	1.33	TC	0.51	Vert(LL)	n/a	-	n/a	999	MT20	244/190
TCDL	15.0	Lumber DOL	1.33	BC	0.23	Vert(CT)	n/a	-	n/a	999		
BCLL	0.0	Rep Stress Incr	YES	WB	0.22	Horz(CT)	0.00	3	n/a	n/a		
BCDL	10.0	Code FBC2020/TPI2014		Matrix-S							Weight: 34 lb	FT = 0%

LUMBER-
TOP CHORD 2x4 SP No.2
BOT CHORD 2x4 SP No.2
WEBS 2x4 SP No.3

BRACING-
TOP CHORD Structural wood sheathing directly applied or 6-0-0 oc purlins.
BOT CHORD Rigid ceiling directly applied or 10-0-0 oc bracing.

MiTek recommends that Stabilizers and required cross bracing be installed during truss erection, in accordance with Stabilizer Installation guide.

REACTIONS. (lb/size) 1=224/12-0-0 (min. 0-1-8), 3=224/12-0-0 (min. 0-1-8), 4=612/12-0-0 (min. 0-1-8)
Max Uplift1=-270(LC 4), 3=-270(LC 4), 4=-739(LC 4)
Max Grav 1=234(LC 9), 3=234(LC 10), 4=612(LC 1)

FORCES. (lb) - Max. Comp./Max. Ten. - All forces 250 (lb) or less except when shown.
WEBS 2-4=-459/734

NOTES- (7-8)
1) Unbalanced roof live loads have been considered for this design.
2) Wind: ASCE 7-16; Vult=175mph (3-second gust) Vasd=136mph; HVHZ; TCDL=5.0psf; BCDL=5.0psf; h=28ft; Cat. II; Exp C; Encl., GCpi=0.18; C-C Exterior(2E) 1-2-3 to 4-2-3, Exterior(2R) 4-2-3 to 7-9-13, Exterior(2E) 7-9-13 to 10-9-13; Lumber DOL=1.60 plate grip DOL=1.60
3) Building Designer / Project engineer responsible for verifying applied roof live load shown covers rain loading requirements specific to the use of this truss component.
4) Gable requires continuous bottom chord bearing.
5) This truss has been designed for a 10.0 psf bottom chord live load nonconcurrent with any other live loads.
6) Provide mechanical connection (by others) of truss to bearing plate capable of withstanding 100 lb uplift at joint(s) except (jt=lb) 1=270, 3=270, 4=739.
7) All truss to truss connection by TCI are on the Truss Placement plan.
8) ARMANDO R. PEREZ PE. # 28026 Ph: (305) 882-8826

LOAD CASE(S) Standard

Job	Truss	Truss Type	Qty	Ply	12715 ROLLING ROAD DR, PINECREST, FL.
12715	V12C	VALLEY	1	1	Job Reference (optional)

Trusscorp Int., 9590 NW 89 AVE, Medley, FL

8.820 s Dec 4 2024 MiTek Industries, Inc. Thu Jun 5 12:45:30 2025 Page 1
ID:_GLN6EJBZ1GCD23RDL_tAxzKvJz-jnPlpttDhhLDHzPRaetQFcpGg6Ps7pUAqgeYhUz9LLJ

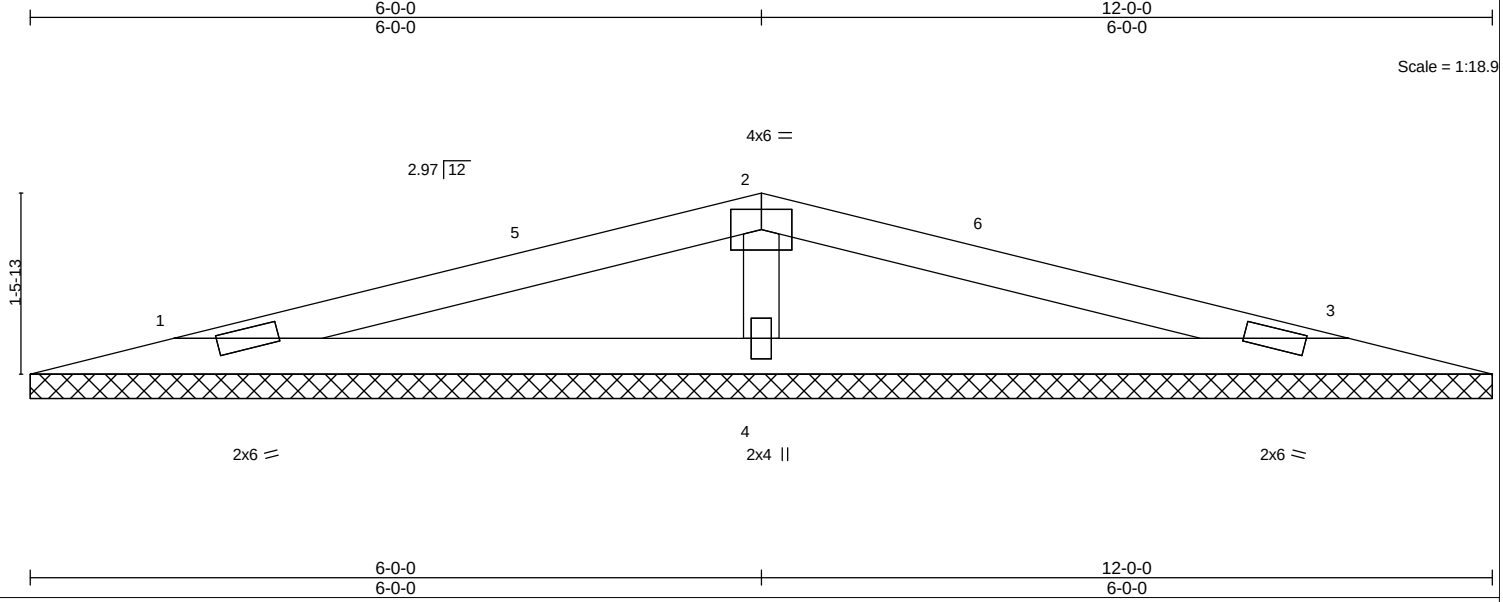

LOADING (psf)		**SPACING-**	2-0-0	**CSI.**		**DEFL.**	in	(loc)	l/defl	L/d	**PLATES**	**GRIP**
TCLL	30.0	Plate Grip DOL	1.33	TC	0.51	Vert(LL)	n/a	-	n/a	999	MT20	244/190
TCDL	15.0	Lumber DOL	1.33	BC	0.23	Vert(CT)	n/a	-	n/a	999		
BCLL	0.0	Rep Stress Incr	YES	WB	0.22	Horz(CT)	0.00	3	n/a	n/a		
BCDL	10.0	Code FBC2020/TPI2014		Matrix-S							Weight: 34 lb	FT = 0%

LUMBER-
TOP CHORD 2x4 SP No.2
BOT CHORD 2x4 SP No.2
WEBS 2x4 SP No.3

BRACING-
TOP CHORD Structural wood sheathing directly applied or 6-0-0 oc purlins.
BOT CHORD Rigid ceiling directly applied or 10-0-0 oc bracing.

MiTek recommends that Stabilizers and required cross bracing be installed during truss erection, in accordance with Stabilizer Installation guide.

REACTIONS. (lb/size) 1=223/12-0-0 (min. 0-1-8), 3=223/12-0-0 (min. 0-1-8), 4=611/12-0-0 (min. 0-1-8)
Max Uplift1=-269(LC 4), 3=-269(LC 4), 4=-738(LC 4)
Max Grav 1=233(LC 9), 3=233(LC 10), 4=611(LC 1)

FORCES. (lb) - Max. Comp./Max. Ten. - All forces 250 (lb) or less except when shown.
WEBS 2-4=-458/733

NOTES- (7-8)
1) Unbalanced roof live loads have been considered for this design.
2) Wind: ASCE 7-16; Vult=175mph (3-second gust) Vasd=136mph; HVHZ; TCDL=5.0psf; BCDL=5.0psf; h=28ft; Cat. II; Exp C; Encl., GCpi=0.18; C-C Exterior(2E) 1-2-6 to 4-2-6, Exterior(2R) 4-2-6 to 7-9-10, Exterior(2E) 7-9-10 to 10-9-10; Lumber DOL=1.60 plate grip DOL=1.60
3) Building Designer / Project engineer responsible for verifying applied roof live load shown covers rain loading requirements specific to the use of this truss component.
4) Gable requires continuous bottom chord bearing.
5) This truss has been designed for a 10.0 psf bottom chord live load nonconcurrent with any other live loads.
6) Provide mechanical connection (by others) of truss to bearing plate capable of withstanding 100 lb uplift at joint(s) except (jt=lb) 1=269, 3=269, 4=738.
7) All truss to truss connection by TCI are on the Truss Placement plan.
8) ARMANDO R. PEREZ PE. # 28026 Ph: (305) 882-8826

LOAD CASE(S) Standard

Job	Truss	Truss Type	Qty	Ply	12715 ROLLING ROAD DR, PINECREST, FL.
12715	V16	Valley	1	1	Job Reference (optional)

Trusscorp Int., 9590 NW 89 AVE, Medley, FL

8.820 s Dec 4 2024 MiTek Industries, Inc. Thu Jun 5 12:45:31 2025 Page 1
ID:_GLN6EJBZ1GCD23RDL_tAxzKvJz-B_z71DurS?T4v7_d8MOfnqLKLWhQsE7K3JO6Dwz9LLI

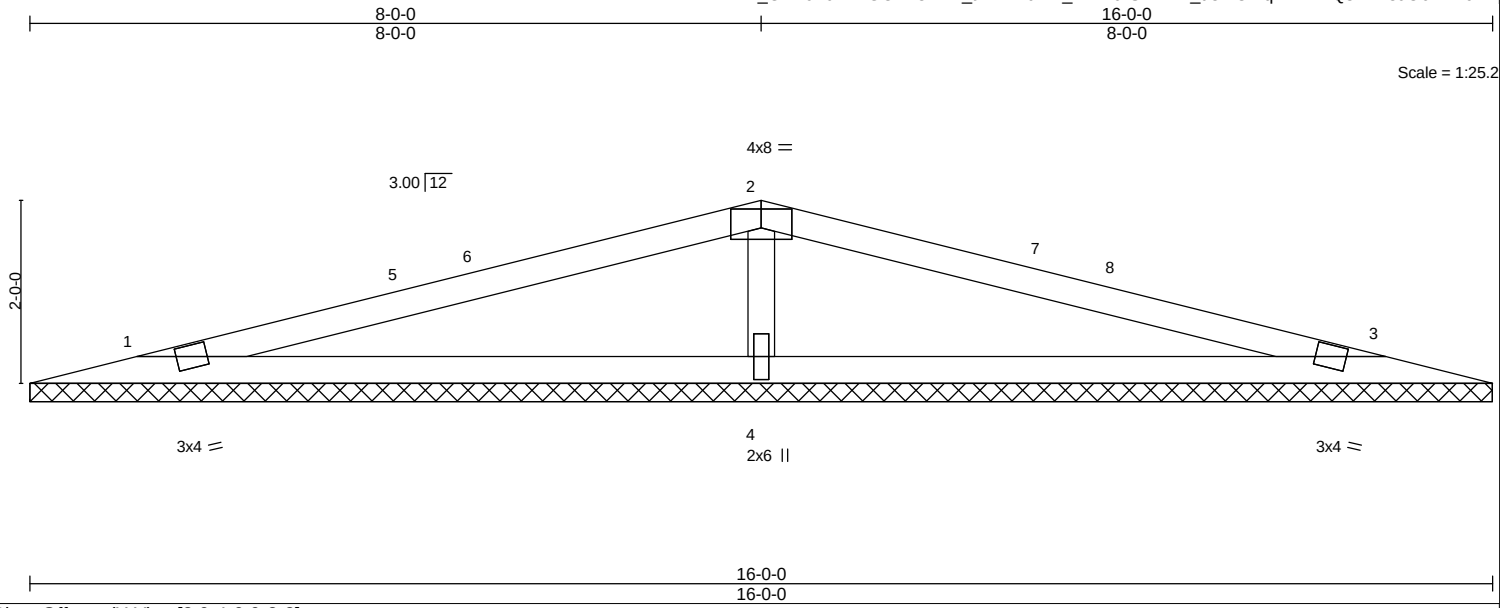

Plate Offsets (X,Y)-- [2:0-4-0,0-2-8]

LOADING (psf)		SPACING-	2-0-0	CSI.		DEFL.	in	(loc)	l/defl	L/d	PLATES	GRIP
TCLL	30.0	Plate Grip DOL	1.33	TC	0.90	Vert(LL)	n/a	-	n/a	999	MT20	244/190
TCDL	15.0	Lumber DOL	1.33	BC	0.47	Vert(CT)	n/a	-	n/a	999		
BCLL	0.0	Rep Stress Incr	YES	WB	0.26	Horz(CT)	0.00	3	n/a	n/a		
BCDL	10.0	Code FBC2020/TPI2014		Matrix-S							Weight: 47 lb	FT = 0%

LUMBER-
TOP CHORD 2x4 SP No.2
BOT CHORD 2x4 SP No.2
OTHERS 2x4 SP No.3

BRACING-
TOP CHORD Structural wood sheathing directly applied or 2-2-0 oc purlins.
BOT CHORD Rigid ceiling directly applied or 10-0-0 oc bracing.

MiTek recommends that Stabilizers and required cross bracing be installed during truss erection, in accordance with Stabilizer Installation guide.

REACTIONS. (lb/size) 1=317/16-0-0 (min. 0-1-12), 3=317/16-0-0 (min. 0-1-12), 4=866/16-0-0 (min. 0-1-12)
Max Uplift1=-327(LC 4), 3=-327(LC 4), 4=-857(LC 4)
Max Grav 1=331(LC 9), 3=331(LC 10), 4=866(LC 1)

FORCES. (lb) - Max. Comp./Max. Ten. - All forces 250 (lb) or less except when shown.
WEBS 2-4=-650/864

NOTES- (7-8)
1) Unbalanced roof live loads have been considered for this design.
2) Wind: ASCE 7-16; Vult=175mph (3-second gust) Vasd=136mph; HVHZ; TCDL=5.0psf; BCDL=5.0psf; h=28ft; Cat. II; Exp C; Encl., GCpi=0.18; C-C Exterior(2E) 1-2-3 to 4-2-3, Interior(1) 4-2-3 to 5-0-0, Exterior(2R) 5-0-0 to 11-0-0, Interior(1) 11-0-0 to 11-9-13, Exterior(2E) 11-9-13 to 14-9-13; Lumber DOL=1.60 plate grip DOL=1.60
3) Building Designer / Project engineer responsible for verifying applied roof live load shown covers rain loading requirements specific to the use of this truss component.
4) Gable requires continuous bottom chord bearing.
5) This truss has been designed for a 10.0 psf bottom chord live load nonconcurrent with any other live loads.
6) Provide mechanical connection (by others) of truss to bearing plate capable of withstanding 100 lb uplift at joint(s) except (jt=lb) 1=327, 3=327, 4=857.
7) All truss to truss connection by TCI are on the Truss Placement plan.
8) ARMANDO R. PEREZ PE. # 28026 Ph: (305) 882-8826

LOAD CASE(S) Standard

Job	Truss	Truss Type	Qty	Ply	12715 ROLLING ROAD DR, PINECREST, FL.
12715	V16C	VALLEY	1	1	Job Reference (optional)

Trusscorp Int., 9590 NW 89 AVE, Medley, FL

8.820 s Dec 4 2024 MiTek Industries, Inc. Thu Jun 5 12:45:33 2025 Page 1
ID:_GLN6EJBZ1GCD23RDL_tAxzKvJz-8M5uSvv5_cjn8Q80FnR7sFRhuJNwK8edWdtCIpz9LLG

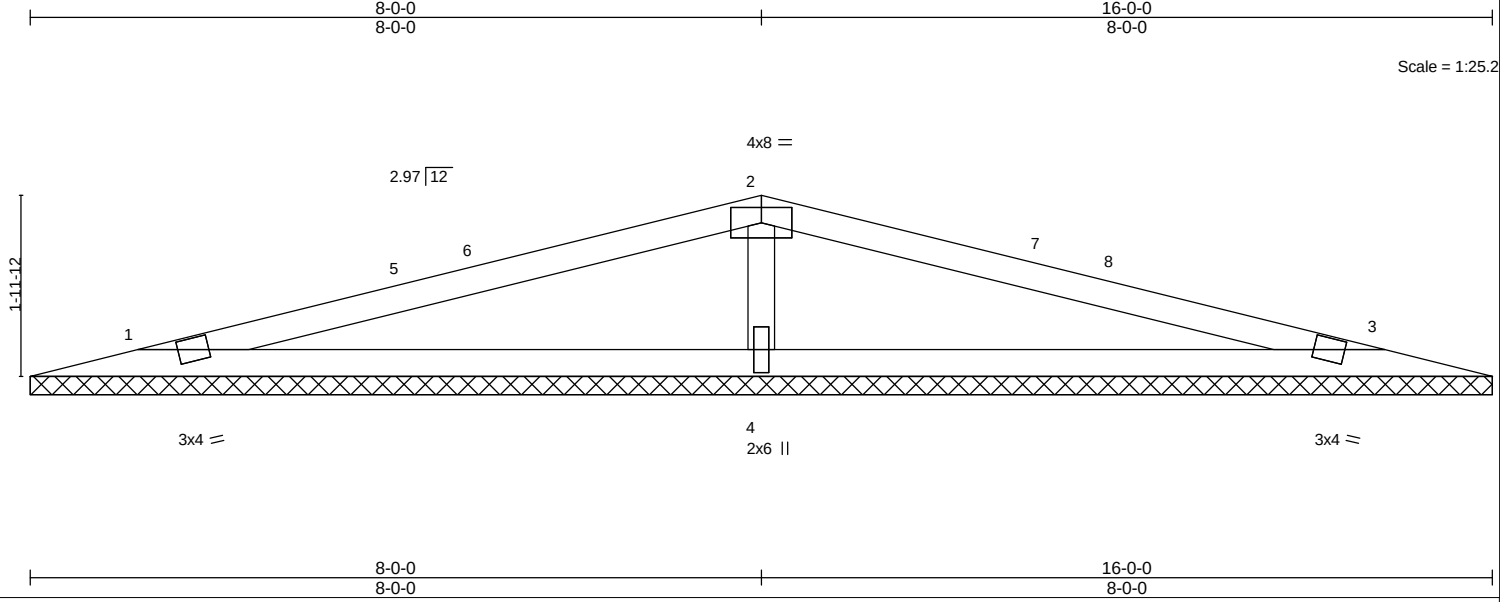

LOADING (psf)		**SPACING-**	2-0-0	**CSI.**		**DEFL.**	in	(loc)	l/defl	L/d	**PLATES**	**GRIP**
TCLL	30.0	Plate Grip DOL	1.33	TC	0.89	Vert(LL)	n/a	-	n/a	999	MT20	244/190
TCDL	15.0	Lumber DOL	1.33	BC	0.47	Vert(CT)	n/a	-	n/a	999		
BCLL	0.0	Rep Stress Incr	YES	WB	0.26	Horz(CT)	0.00	3	n/a	n/a		
BCDL	10.0	Code FBC2020/TPI2014		Matrix-S							Weight: 47 lb	FT = 0%

LUMBER-
TOP CHORD 2x4 SP No.2
BOT CHORD 2x4 SP No.2
WEBS 2x4 SP No.3

BRACING-
TOP CHORD Structural wood sheathing directly applied or 2-2-0 oc purlins.
BOT CHORD Rigid ceiling directly applied or 10-0-0 oc bracing.

MiTek recommends that Stabilizers and required cross bracing be installed during truss erection, in accordance with Stabilizer Installation guide.

REACTIONS. (lb/size) 1=316/16-0-0 (min. 0-1-12), 3=316/16-0-0 (min. 0-1-12), 4=865/16-0-0 (min. 0-1-12)
Max Uplift1=-326(LC 4), 3=-326(LC 4), 4=-857(LC 4)
Max Grav 1=330(LC 9), 3=330(LC 10), 4=865(LC 1)

FORCES. (lb) - Max. Comp./Max. Ten. - All forces 250 (lb) or less except when shown.
WEBS 2-4=-649/863

NOTES- (7-8)
1) Unbalanced roof live loads have been considered for this design.
2) Wind: ASCE 7-16; Vult=175mph (3-second gust) Vasd=136mph; HVHZ; TCDL=5.0psf; BCDL=5.0psf; h=28ft; Cat. II; Exp C; Encl., GCpi=0.18; C-C Exterior(2E) 1-2-6 to 4-2-6, Interior(1) 4-2-6 to 5-0-0, Exterior(2R) 5-0-0 to 11-0-0, Interior(1) 11-0-0 to 11-9-10, Exterior(2E) 11-9-10 to 14-9-10; Lumber DOL=1.60 plate grip DOL=1.60
3) Building Designer / Project engineer responsible for verifying applied roof live load shown covers rain loading requirements specific to the use of this truss component.
4) Gable requires continuous bottom chord bearing.
5) This truss has been designed for a 10.0 psf bottom chord live load nonconcurrent with any other live loads.
6) Provide mechanical connection (by others) of truss to bearing plate capable of withstanding 100 lb uplift at joint(s) except (jt=lb) 1=326, 3=326, 4=857.
7) All truss to truss connection by TCI are on the Truss Placement plan.
8) ARMANDO R. PEREZ PE. # 28026 Ph: (305) 882-8826

LOAD CASE(S) Standard

Job	Truss	Truss Type	Qty	Ply	12715 ROLLING ROAD DR, PINECREST, FL.
12715	V20	Valley	1	1	Job Reference (optional)

Trusscorp Int., 9590 NW 89 AVE, Medley, FL

8.820 s Dec 4 2024 MiTek Industries, Inc. Thu Jun 5 12:45:34 2025 Page 1
ID:_GLN6EJBZ1GCD23RDL_tAxzKvJz-cZfGfFwjlwremajCpUyMPSz_mjoh3dRmlHcmqFz9LLF

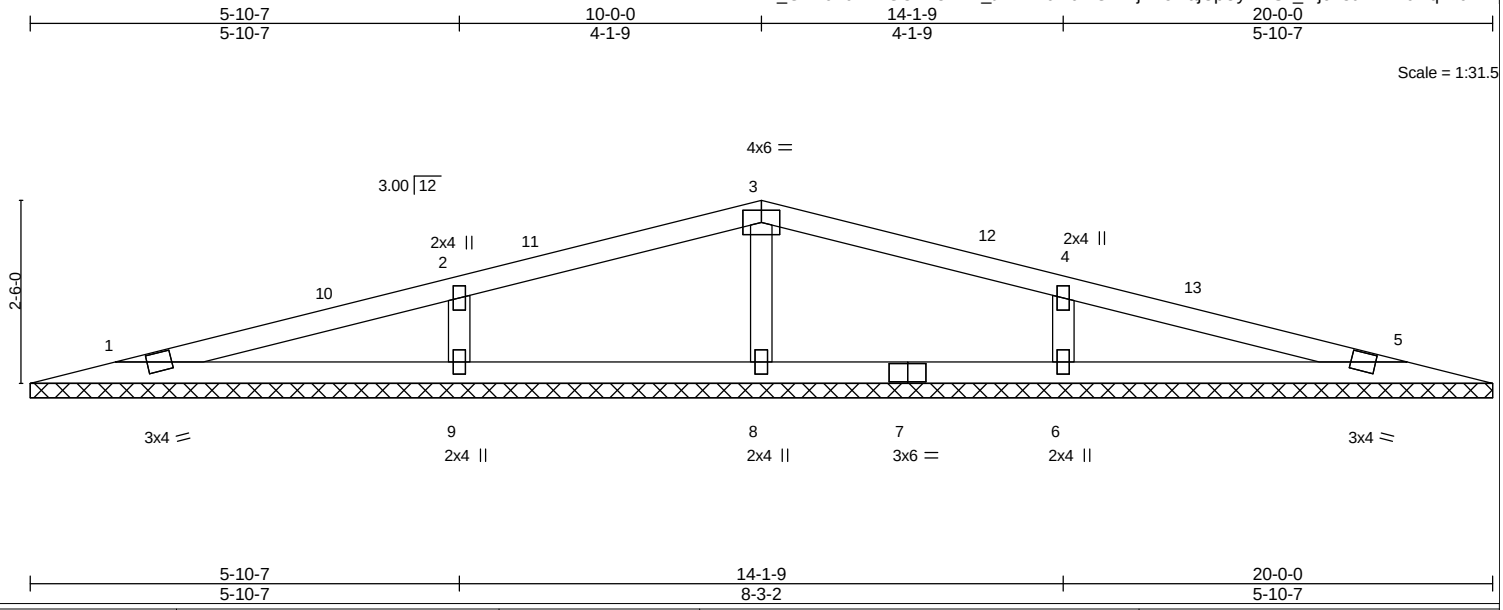

LOADING (psf)		SPACING-	2-0-0	CSI.		DEFL.	in	(loc)	l/defl	L/d	PLATES	GRIP
TCLL	30.0	Plate Grip DOL	1.33	TC	0.37	Vert(LL)	n/a	-	n/a	999	MT20	244/190
TCDL	15.0	Lumber DOL	1.33	BC	0.18	Vert(CT)	n/a	-	n/a	999		
BCLL	0.0	Rep Stress Incr	YES	WB	0.16	Horz(CT)	0.00	5	n/a	n/a		
BCDL	10.0	Code FBC2020/TPI2014		Matrix-S							Weight: 62 lb	FT = 0%

LUMBER-
TOP CHORD 2x4 SP No.2
BOT CHORD 2x4 SP No.2
WEBS 2x4 SP No.3
OTHERS 2x4 SP No.3

BRACING-
TOP CHORD Structural wood sheathing directly applied or 6-0-0 oc purlins.
BOT CHORD Rigid ceiling directly applied or 10-0-0 oc bracing.

MiTek recommends that Stabilizers and required cross bracing be installed during truss erection, in accordance with Stabilizer Installation guide.

REACTIONS. All bearings 20-0-0.
(lb) - Max Uplift All uplift 100 lb or less at joint(s) except 1=-176(LC 4), 5=-176(LC 4), 8=-278(LC 4), 9=-498(LC 4), 6=-498(LC 4)
Max Grav All reactions 250 lb or less at joint(s) 1, 5 except 8=359(LC 1), 9=590(LC 9), 6=590(LC 10)

FORCES. (lb) - Max. Comp./Max. Ten. - All forces 250 (lb) or less except when shown.
WEBS 3-8=-296/327, 2-9=-474/527, 4-6=-474/527

NOTES- (7-8)
1) Unbalanced roof live loads have been considered for this design.
2) Wind: ASCE 7-16; Vult=175mph (3-second gust) Vasd=136mph; HVHZ; TCDL=5.0psf; BCDL=5.0psf; h=28ft; Cat. II; Exp C; Encl., GCpi=0.18; C-C Exterior(2E) 1-2-3 to 4-2-3, Interior(1) 4-2-3 to 7-0-0, Exterior(2R) 7-0-0 to 13-0-0, Interior(1) 13-0-0 to 15-9-13, Exterior(2E) 15-9-13 to 18-9-13; Lumber DOL=1.60 plate grip DOL=1.60
3) Building Designer / Project engineer responsible for verifying applied roof live load shown covers rain loading requirements specific to the use of this truss component.
4) Gable requires continuous bottom chord bearing.
5) This truss has been designed for a 10.0 psf bottom chord live load nonconcurrent with any other live loads.
6) Provide mechanical connection (by others) of truss to bearing plate capable of withstanding 176 lb uplift at joint 1, 176 lb uplift at joint 5, 278 lb uplift at joint 8, 498 lb uplift at joint 9 and 498 lb uplift at joint 6.
7) All truss to truss connection by TCI are on the Truss Placement plan.
8) ARMANDO R. PEREZ PE. # 28026 Ph: (305) 882-8826

LOAD CASE(S) Standard

Job	Truss	Truss Type	Qty	Ply	12715 ROLLING ROAD DR, PINECREST, FL.
12715	V20C	VALLEY	1	1	Job Reference (optional)

Trusscorp Int., 9590 NW 89 AVE, Medley, FL

8.820 s Dec 4 2024 MiTek Industries, Inc. Thu Jun 5 12:45:36 2025 Page 1
ID:_GLN6EJBZ1GCD23RDL_tAxzKvJz-Yxn04xy_GX5M?usbwv_qUt3KHXT9XXx3Cb5su8z9LLD

5-10-7 | 10-0-0 | 14-1-9 | 20-0-0
5-10-7 | 4-1-9 | 4-1-9 | 5-10-7

Scale = 1:31.5

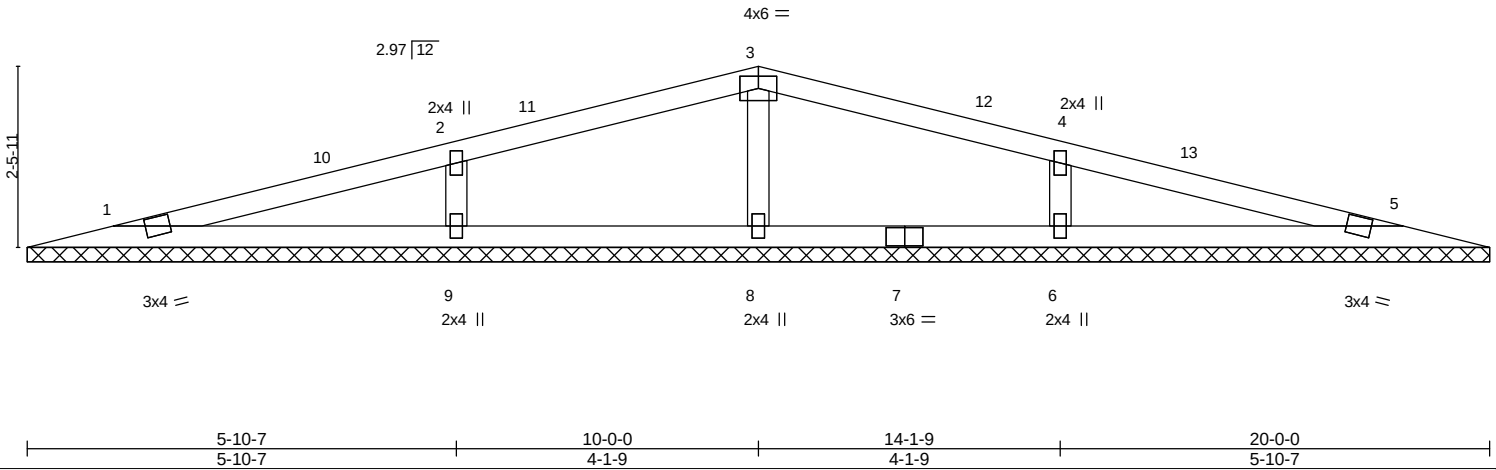

5-10-7 | 10-0-0 | 14-1-9 | 20-0-0
5-10-7 | 4-1-9 | 4-1-9 | 5-10-7

Plate Offsets (X,Y)-- [4:0-0-0,0-0-0]

LOADING (psf)		**SPACING-**	2-0-0	**CSI.**		**DEFL.**	in	(loc)	l/defl	L/d	**PLATES**	**GRIP**
TCLL	30.0	Plate Grip DOL	1.33	TC	0.37	Vert(LL)	n/a	-	n/a	999	MT20	244/190
TCDL	15.0	Lumber DOL	1.33	BC	0.18	Vert(CT)	n/a	-	n/a	999		
BCLL	0.0	Rep Stress Incr	YES	WB	0.16	Horz(CT)	0.00	5	n/a	n/a		
BCDL	10.0	Code FBC2020/TPI2014		Matrix-S							Weight: 62 lb	FT = 0%

LUMBER-
TOP CHORD 2x4 SP No.2
BOT CHORD 2x4 SP No.2
WEBS 2x4 SP No.3

BRACING-
TOP CHORD Structural wood sheathing directly applied or 6-0-0 oc purlins.
BOT CHORD Rigid ceiling directly applied or 10-0-0 oc bracing.

MiTek recommends that Stabilizers and required cross bracing be installed during truss erection, in accordance with Stabilizer Installation guide.

REACTIONS. All bearings 20-0-0.
(lb) - Max Uplift All uplift 100 lb or less at joint(s) except 1=-175(LC 4), 5=-175(LC 4), 9=-497(LC 4), 8=-280(LC 4), 6=-497(LC 4)
Max Grav All reactions 250 lb or less at joint(s) 1, 5 except 9=589(LC 9), 8=360(LC 1), 6=589(LC 10)

FORCES. (lb) - Max. Comp./Max. Ten. - All forces 250 (lb) or less except when shown.
WEBS 2-9=-473/526, 3-8=-296/329, 4-6=-473/526

NOTES- (7-8)
1) Unbalanced roof live loads have been considered for this design.
2) Wind: ASCE 7-16; Vult=175mph (3-second gust) Vasd=136mph; HVHZ; TCDL=5.0psf; BCDL=5.0psf; h=28ft; Cat. II; Exp C; Encl., GCpi=0.18; C-C Exterior(2E) 1-2-6 to 4-2-6, Interior(1) 4-2-6 to 7-0-0, Exterior(2R) 7-0-0 to 13-0-0, Interior(1) 13-0-0 to 15-9-10, Exterior(2E) 15-9-10 to 18-9-10; Lumber DOL=1.60 plate grip DOL=1.60
3) Building Designer / Project engineer responsible for verifying applied roof live load shown covers rain loading requirements specific to the use of this truss component.
4) Gable requires continuous bottom chord bearing.
5) This truss has been designed for a 10.0 psf bottom chord live load nonconcurrent with any other live loads.
6) Provide mechanical connection (by others) of truss to bearing plate capable of withstanding 175 lb uplift at joint 1, 175 lb uplift at joint 5, 497 lb uplift at joint 9, 280 lb uplift at joint 8 and 497 lb uplift at joint 6.
7) All truss to truss connection by TCI are on the Truss Placement plan.
8) ARMANDO R. PEREZ PE. # 28026 Ph: (305) 882-8826

LOAD CASE(S) Standard

Certificate of Competency

Manufacturer or Fabricator
of Construction Materials,
Products or Assemblies

Miami-Dade County, Florida
Department of Regulatory and
Economic Resources
11805 S.W. 26 Street, Room 208
Miami, Florida 33175-2474
Tel (786) 315-2590 Fax (786) 315-2599

Certification No. 24-0903.06

The Department of Regulatory and Economic Resources hereby certifies that ***Trusscorp International, Inc.*** located at ***9590 NW 89th Avenue, Miami, FL 33178*** complies with the requirements of Article IV, Chapter 8 of the Code of Miami-Dade County as a manufacturer and/or fabricator of **Wood Trusses.**

Certification Date: *10/1/2024*
Certification Expires: *9/30/2025*

Americo Segura, M.S., C.G.C.
Quality Assurance Unit Supervisor
Product Control Section

THIS CERTIFICATE DOES NOT ENTITLE HOLDER TO CONTRACT FOR ERECTION OR INSTALATION. WHERE SEVERAL PLANTS ARE OWNED BY THE SAME COMPANY A SEPARATE CERTIFICATE OF COMPLIANCE SHALL BE REQUIRED FOR EACH PLANT. THIS CERTIFICATE SHALL BE REVOKED IF THE HOLDER FAILS TO MEET THE CODE OF POLICY REQUIREMENTS COVERING THIS PRODUCT.

A&D

Product Approval
USER: Public User

FL #	FL17232-R11
Application Type	Revision
Code Version	2023
Application Status	Approved
	*Approved by DBPR. Approvals by DBPR shall be reviewed and ratified by the POC and/or the Commission if necessary.
Comments	
Archived	☐
Product Manufacturer	MiTek Inc.
Address/Phone/Email	16023 Swingley Ridge Road Chesterfield, MO 63017 (800) 328-5934 bpr@mii.com
Authorized Signature	Erin Walden bpr@mii.com
Technical Representative	Erin M. Walden
Address/Phone/Email	16023 Swingley Ridge Road Chesterfield, MO 63017 (952) 898-8635 ewalden@mii.com
Quality Assurance Representative	Erin M. Walden
Address/Phone/Email	16023 Swingley Ridge Road Chesterfield, MO 63017 (952) 898-8635 ewalden@mii.com
Category	Structural Components
Subcategory	Wood Connectors
Compliance Method	Evaluation Report from a Product Evaluation Entity
Evaluation Entity	ICC Evaluation Service, LLC
Quality Assurance Entity	ICC-ES Evaluation Service, LLC
Quality Assurance Contract Expiration Date	10/31/2026
Validated By	ICC Evaluation Service, LLC.
Certificate of Independence	FL17232_R11_COI_ICC-ES Certification of Independence for Evaluation 2024 (1).pdf

Referenced Standard and Year (of Standard)

Standard	Year
ANSI/AWC NDS	2018
ASTM D7147	2011

Equivalence of Product Standards Certified By

Sections from the Code

Product Approval Method	Method 1 Option C
Date Submitted	01/15/2025
Date Validated	01/17/2025
Date Pending FBC Approval	
Date Approved	01/20/2025

Summary of Products

Go to Page GO!

FL #	Model, Number or Name	Description
17232.1	CLPBF	Butterfly Hanger
Limits of Use **Approved for use in HVHZ:** No **Approved for use outside HVHZ:** Yes **Impact Resistant:** N/A **Design Pressure:** N/A **Other:**		**Installation Instructions** FL17232_R11_II_ESR-3445 rev Dec24.pdf Verified By: ICC Evaluation Service, LLC Created by Independent Third Party: **Evaluation Reports** FL17232_R11_AE_ESR-3445 rev Dec24.pdf
17232.2	HD26, HD24-2, HD34, HD44	Face Mount Hanger
Limits of Use **Approved for use in HVHZ:** No **Approved for use outside HVHZ:** Yes **Impact Resistant:** N/A **Design Pressure:** N/A **Other:**		**Installation Instructions** FL17232_R11_II_ESR-3445 rev Dec24.pdf Verified By: ICC Evaluation Service, LLC Created by Independent Third Party: **Evaluation Reports** FL17232_R11_AE_ESR-3445 rev Dec24.pdf
17232.3	HD28, HD210, HD212, HD214, HD216, HD26-2, HD28-2, HD210-2, HD212-2, HD214-2, HD216-2, HD26-3, HD28-3, HD210-3, HD212-3, HD214-3, HD216-3, HD28-4, HD210-4, HD36, HD38, HD310, HD312, HD314, HD316, HD38-2, HD310-2, HD312-2, HD46, HD48	Face Mount Hanger
Limits of Use **Approved for use in HVHZ:** Yes **Approved for use outside HVHZ:** Yes **Impact Resistant:** N/A **Design Pressure:** N/A **Other:**		**Installation Instructions** FL17232_R11_II_ESR-3445 rev Dec24.pdf Verified By: ICC Evaluation Service, LLC Created by Independent Third Party: **Evaluation Reports** FL17232_R11_AE_ESR-3445 rev Dec24.pdf
17232.4	HD410, HD412, HD414, HD416, HD418, HD66, HD68, HD610, HD612, HD614, HD616, HD86, HD88, HD810, HD812, HD814, HD816, HD1770, HD17925, HD17112, HD1714, HD27925, HD27112, HD2714, HD32105, HD3212, HD5112, HD51135	Face Mount Hanger
Limits of Use **Approved for use in HVHZ:** Yes **Approved for use outside HVHZ:** Yes **Impact Resistant:** N/A **Design Pressure:** N/A **Other:**		**Installation Instructions** FL17232_R11_II_ESR-3445 rev Dec24.pdf Verified By: ICC Evaluation Service, LLC Created by Independent Third Party: **Evaluation Reports** FL17232_R11_AE_ESR-3445 rev Dec24.pdf
17232.5	HD5210, HD5212, HD5214, HD5216, HD62117, Hd71117, HD7100, HD7120, HD7140, HD7160, HD7180, HD77117, HD83117, HD95117	Face Mount Hanger
Limits of Use **Approved for use in HVHZ:** Yes **Approved for use outside HVHZ:** Yes **Impact Resistant:** N/A **Design Pressure:** N/A **Other:**		**Installation Instructions** FL17232_R11_II_ESR-3445 rev Dec24.pdf Verified By: ICC Evaluation Service, LLC Created by Independent Third Party: **Evaluation Reports** FL17232_R11_AE_ESR-3445 rev Dec24.pdf

17232.6	HDQ179IF, HDQ17112IF, HDQ1714IF, HD310IF, HDQ210-2IF, HDQ410IF, HDQ412IF, HDQ210-3IF, HDQ5210IF, HDQ5212IF, HDQ610IF, HDQ612IF	Inverted Flange Face Mount Hanger
Limits of Use **Approved for use in HVHZ:** Yes **Approved for use outside HVHZ:** Yes **Impact Resistant:** N/A **Design Pressure:** N/A **Other:**		**Installation Instructions** FL17232_R11_II_ESR-3445 rev Dec24.pdf Verified By: ICC Evaluation Service, LLC Created by Independent Third Party: **Evaluation Reports** FL17232_R11_AE_ESR-3445 rev Dec24.pdf
17232.7 *	HUS26, HUS28, HUS210, HUS175, HUS177, HUS179, HUS24-2, HUS26-2, HUS28-2, HUS210-2, HUS212-2, HUS46, HUS48, HUS410, HUS412	Slant Nail Joist Hanger
Limits of Use **Approved for use in HVHZ:** Yes **Approved for use outside HVHZ:** Yes **Impact Resistant:** N/A **Design Pressure:** N/A **Other:**		**Installation Instructions** FL17232_R11_II_ESR-3445 rev Dec24.pdf Verified By: ICC Evaluation Service, LLC Created by Independent Third Party: **Evaluation Reports** FL17232_R11_AE_ESR-3445 rev Dec24.pdf
17232.8	IHF15925, IHF15112, IHF1514, IHF16925, IHF16112, IHF1614, IHF17925, IHF17112, IHF1714, IHF1716, IHF20925, IHF20112, IHF2014, IHF23925, IHF23112, IHF2314, IHF2316, IHF2318, IHF25925, IHF25112, IHF2514, IHF2516, IHF26925, IHF26112, IHF2614, IHF2616	Joist Hanger
Limits of Use **Approved for use in HVHZ:** No **Approved for use outside HVHZ:** Yes **Impact Resistant:** N/A **Design Pressure:** N/A **Other:**		**Installation Instructions** FL17232_R11_II_ESR-3445 rev Dec24.pdf Verified By: ICC Evaluation Service, LLC Created by Independent Third Party: **Evaluation Reports** FL17232_R11_AE_ESR-3445 rev Dec24.pdf
17232.9	IHF15925-2, IHF15112-2, IHF16925-2, IHF16112-2, IHF35925, IHF35112, IHF3514, IHF3516, IHF3518, IHF20925-2, IHF20112-2, IHF2014-2, IHF23925-2, IHF25925-2, IHF25112-2	Joist Hanger
Limits of Use **Approved for use in HVHZ:** No **Approved for use outside HVHZ:** Yes **Impact Resistant:** N/A **Design Pressure:** N/A **Other:**		**Installation Instructions** FL17232_R11_II_ESR-3445 rev Dec24.pdf Verified By: ICC Evaluation Service, LLC Created by Independent Third Party: **Evaluation Reports** FL17232_R11_AE_ESR-3445 rev Dec24.pdf
17232.10	IHFL15925, IHFL15112, IHFL17925, IHFL17112, IHFL1714, IHFL1716, IHFL20925, IHFL20112, IHFL2014, IHFL2016, IHFL23925, IHFL23112, IHFL2314, IHFL2316, IHFL25925, IHFL25112, IHFL2514, IHFL2516, IHFL35925, IHFL35112, IHFL3514, IHFL3516	Joist Hanger
Limits of Use **Approved for use in HVHZ:** No **Approved for use outside HVHZ:** Yes **Impact Resistant:** N/A **Design Pressure:** N/A **Other:**		**Installation Instructions** FL17232_R11_II_ESR-3445 rev Dec24.pdf Verified By: ICC Evaluation Service, LLC Created by Independent Third Party: **Evaluation Reports** FL17232_R11_AE_ESR-3445 rev Dec24.pdf
17232.11	JL24, JL26	Standard Joist Hangers
Limits of Use **Approved for use in HVHZ:** No **Approved for use outside HVHZ:** Yes **Impact Resistant:** N/A **Design Pressure:** N/A **Other:**		**Installation Instructions** FL17232_R11_II_ESR-3445 rev Dec24.pdf Verified By: ICC Evaluation Service, LLC Created by Independent Third Party: **Evaluation Reports** FL17232_R11_AE_ESR-3445 rev Dec24.pdf

17232.12	JL24-IF	Inverted Flange Joist Hanger
Limits of Use **Approved for use in HVHZ:** No **Approved for use outside HVHZ:** Yes **Impact Resistant:** N/A **Design Pressure:** N/A **Other:**		**Installation Instructions** FL17232_R11_II_ESR-3445 rev Dec24.pdf Verified By: ICC Evaluation Service, LLC Created by Independent Third Party: **Evaluation Reports** FL17232_R11_AE_ESR-3445 rev Dec24.pdf
17232.13	JL26-IF, JL28-IF, JL210-IF	Inverted Flange Joist Hanger
Limits of Use **Approved for use in HVHZ:** Yes **Approved for use outside HVHZ:** Yes **Impact Resistant:** N/A **Design Pressure:** N/A **Other:**		**Installation Instructions** FL17232_R11_II_ESR-3445 rev Dec24.pdf Verified By: ICC Evaluation Service, LLC Created by Independent Third Party: **Evaluation Reports** FL17232_R11_AE_ESR-3445 rev Dec24.pdf
17232.14	JL28, JL210	Standard Joist Hangers
Limits of Use **Approved for use in HVHZ:** Yes **Approved for use outside HVHZ:** Yes **Impact Resistant:** N/A **Design Pressure:** N/A **Other:**		**Installation Instructions** FL17232_R11_II_ESR-3445 rev Dec24.pdf Verified By: ICC Evaluation Service, LLC Created by Independent Third Party: **Evaluation Reports** FL17232_R11_AE_ESR-3445 rev Dec24.pdf
17232.15	JN26-2, JN28-2, JN26E, JN28E, JN210E	Power Nail Hangers
Limits of Use **Approved for use in HVHZ:** No **Approved for use outside HVHZ:** Yes **Impact Resistant:** N/A **Design Pressure:** N/A **Other:**		**Installation Instructions** FL17232_R11_II_ESR-3445 rev Dec24.pdf Verified By: ICC Evaluation Service, LLC Created by Independent Third Party: **Evaluation Reports** FL17232_R11_AE_ESR-3445 rev Dec24.pdf
17232.16	JUS24, JUS24-2, JUS24-3, JUS44	Slant Nail Joist Hanger
Limits of Use **Approved for use in HVHZ:** No **Approved for use outside HVHZ:** Yes **Impact Resistant:** N/A **Design Pressure:** N/A **Other:**		**Installation Instructions** FL17232_R11_II_ESR-3445 rev Dec24.pdf Verified By: ICC Evaluation Service, LLC Created by Independent Third Party: **Evaluation Reports** FL17232_R11_AE_ESR-3445 rev Dec24.pdf
17232.17 *	JUS26, JUS28, JUS210, JUS36, JUS38, JUS310, JUS26-2, JUS28-2, JUS210-2, JUS214-2, JUS46, JUS48, JUS410, JUS412, JUS414, JUS26-3, JUS28-3, JUS210-3, JUS212-3, JUS214-3	Slant Nail Joist Hanger
Limits of Use **Approved for use in HVHZ:** Yes **Approved for use outside HVHZ:** Yes **Impact Resistant:** N/A **Design Pressure:** N/A **Other:**		**Installation Instructions** FL17232_R11_II_ESR-3445 rev Dec24.pdf Verified By: ICC Evaluation Service, LLC Created by Independent Third Party: **Evaluation Reports** FL17232_R11_AE_ESR-3445 rev Dec24.pdf
17232.18	LGU325, LGU363, LGU525, MGU363, MGU525, MGU550, MGU562, MGU700, HGU363, HGU525, HGU550, HGU562, HGU700, HGU725, HGU900	Girder Hanger
Limits of Use **Approved for use in HVHZ:** Yes **Approved for use outside HVHZ:** Yes **Impact Resistant:** N/A **Design Pressure:** N/A **Other:**		**Installation Instructions** FL17232_R11_II_ESR-3445 rev Dec24.pdf Verified By: ICC Evaluation Service, LLC Created by Independent Third Party: **Evaluation Reports** FL17232_R11_AE_ESR-3445 rev Dec24.pdf
17232.19	MUS26, MUS28	Slant Nail Joist Hanger
Limits of Use **Approved for use in HVHZ:** Yes **Approved for use outside HVHZ:** Yes **Impact Resistant:** N/A **Design Pressure:** N/A **Other:**		**Installation Instructions** FL17232_R11_II_ESR-3445 rev Dec24.pdf Verified By: ICC Evaluation Service, LLC Created by Independent Third Party: **Evaluation Reports** FL17232_R11_AE_ESR-3445 rev Dec24.pdf

Product Approval Method	Method 1 Option C
Date Submitted	01/15/2025
Date Validated	01/17/2025
Date Pending FBC Approval	
Date Approved	01/20/2025

Summary of Products

Go to Page GO!

FL #	Model, Number or Name	Description
17232.21	SUH26, SUH28, SUH210, SUH214, SUH1710, SUH1714, SUH26R, SUR28R, SUH210R, SUH214R,SUH2310, SUH2314, SUH36, SUH310, SUH314, SUH2610, SUH2614, SUH26-2, SUH28-2,SUH210-2,SUH214-2	Joist Hanger
Limits of Use **Approved for use in HVHZ:** Yes **Approved for use outside HVHZ:** Yes **Impact Resistant:** N/A **Design Pressure:** N/A **Other:**		**Installation Instructions** FL17232_R11_II_ESR-3445 rev Dec24.pdf Verified By: ICC Evaluation Service, LLC Created by Independent Third Party: **Evaluation Reports** FL17232_R11_AE_ESR-3445 rev Dec24.pdf
17232.22	SUH46, SUH48, SUH410, SUH414, SUH46R, SUH410R, SUH28-3, SUH210-3, SUH2310-2, SUH2314-2, SUH310-2, SUH66, SUH610, SUH66R, SUH610R	Joist Hanger
Limits of Use **Approved for use in HVHZ:** Yes **Approved for use outside HVHZ:** Yes **Impact Resistant:** N/A **Design Pressure:** N/A **Other:**		**Installation Instructions** FL17232_R11_II_ESR-3445 rev Dec24.pdf Verified By: ICC Evaluation Service, LLC Created by Independent Third Party: **Evaluation Reports** FL17232_R11_AE_ESR-3445 rev Dec24.pdf
17232.23	THD26, THD28, THD210, THD175, THD177, THD179, THD26-2, THD28-2, THD210-2, THD210-3, THD210-4, THD46, THD48, THD410, THD412, THD414, THD610, THD612, THD614, THD7210	Face Mount Hanger
Limits of Use **Approved for use in HVHZ:** Yes **Approved for use outside HVHZ:** Yes **Impact Resistant:** N/A **Design Pressure:** N/A **Other:**		**Installation Instructions** FL17232_R11_II_ESR-3445 rev Dec24.pdf Verified By: ICC Evaluation Service, LLC Created by Independent Third Party: **Evaluation Reports** FL17232_R11_AE_ESR-3445 rev Dec24.pdf
17232.24 *	THDH26, THDH28, THDH210, THDH27925,THDH27112,THDH2714, THDH26-2, THDH28-2, THDH210-2, THDH212-2, THDH214-2, THDH3210, THDH3212, THDH46, THDH48, THDH410, THDH412, THDH414	Face Mount Hanger
Limits of Use **Approved for use in HVHZ:** Yes **Approved for use outside HVHZ:** Yes **Impact Resistant:** N/A **Design Pressure:** N/A **Other:**		**Installation Instructions** FL17232_R11_II_ESR-3445 rev Dec24.pdf Verified By: ICC Evaluation Service, LLC Created by Independent Third Party: **Evaluation Reports** FL17232_R11_AE_ESR-3445 rev Dec24.pdf
17232.25	THDH26-3,THDH28-3, THDH210-3, THDH212-3,THDH214-3, THDH5210, THDH5212, THDH5214, THDH610, THDH612, THDH614, THDH26-4, THDH28-4, THDH6710, THDH6712,	Face Mount Hanger

	THDH6714, THDH7210, THDH7212, THDH7214	
Limits of Use **Approved for use in HVHZ:** Yes **Approved for use outside HVHZ:** Yes **Impact Resistant:** N/A **Design Pressure:** N/A **Other:**		**Installation Instructions** FL17232_R11_II_ESR-3445 rev Dec24.pdf Verified By: ICC Evaluation Service, LLC Created by Independent Third Party: **Evaluation Reports** FL17232_R11_AE_ESR-3445 rev Dec24.pdf
17232.26	THDHQ26-2, THDHQ26-3, THDHQ26-4, THDHQ28-2, THDHQ28-3, THDHQ28-4, THDHQ210-2, THDHQ210-3, THDHQ210-4, THDHQ46, THDHQ48, THDHQ410	Girder Truss Hanger
Limits of Use **Approved for use in HVHZ:** Yes **Approved for use outside HVHZ:** Yes **Impact Resistant:** N/A **Design Pressure:** N/A **Other:**		**Installation Instructions** FL17232_R11_II_ESR-3445 rev Dec24.pdf Verified By: ICC Evaluation Service, LLC Created by Independent Third Party: **Evaluation Reports** FL17232_R11_AE_ESR-3445 rev Dec24.pdf
17232.27	THF15925, THF15112, THF15140, THF16925,THF16112, THF16140, THF17925, THF17112, THF17140, THF20925, THF20112, THF20140, THF17157, THF20157,THF23925, THF23100, THF23118, THF23140, THF23160, THF25925, THF25112, THF25120, THF25130, THF25140, THF25160	Face Mount Hanger
Limits of Use **Approved for use in HVHZ:** No **Approved for use outside HVHZ:** Yes **Impact Resistant:** N/A **Design Pressure:** N/A **Other:**		**Installation Instructions** FL17232_R11_II_ESR-3445 rev Dec24.pdf Verified By: ICC Evaluation Service, LLC Created by Independent Third Party: **Evaluation Reports** FL17232_R11_AE_ESR-3445 rev Dec24.pdf
17232.28	THF15925-2, THF15112-2, THF15140-2, THF16925-2, THF16112-2, THF16140-2,THF17157-2, THF20925-2, THF20112-2, THF20140-2,THF23180, THF23925-2, THF23118-2, THF23140-2, THF23160-2, THF25925-2, THF25112-2, THF25140-2, THF25160-2,THF35165	Face Mount Hanger
Limits of Use **Approved for use in HVHZ:** Yes **Approved for use outside HVHZ:** Yes **Impact Resistant:** N/A **Design Pressure:** N/A **Other:**		**Installation Instructions** FL17232_R11_II_ESR-3445 rev Dec24.pdf Verified By: ICC Evaluation Service, LLC Created by Independent Third Party: **Evaluation Reports** FL17232_R11_AE_ESR-3445 rev Dec24.pdf
17232.29	THF26925, THF26112, THF26140, THF26160, THF35925, THF35112, THF35140, THF35157	Face Mount Hanger
Limits of Use **Approved for use in HVHZ:** No **Approved for use outside HVHZ:** Yes **Impact Resistant:** N/A **Design Pressure:** N/A **Other:**		**Installation Instructions** FL17232_R11_II_ESR-3445 rev Dec24.pdf Verified By: ICC Evaluation Service, LLC Created by Independent Third Party: **Evaluation Reports** FL17232_R11_AE_ESR-3445 rev Dec24.pdf
17232.30	THFI1795, THFI17118, THFI1714, THFI1716, THFI2095, THFI20118, THFI2014, THFI2016, THFI2395, THFI23118, THFI2314, THFI2316, THFI25925, THFI2595, THFI25118, THFI2514, THFI2516, THFI3595, THFI35118, THFI3514, THFI3516	Fact Mount Hanger
Limits of Use **Approved for use in HVHZ:** No **Approved for use outside HVHZ:** Yes **Impact Resistant:** N/A		**Installation Instructions** FL17232_R11_II_ESR-3445 rev Dec24.pdf Verified By: ICC Evaluation Service, LLC Created by Independent Third Party:

ICC-ES Evaluation Report

ESR-3445

Reissued October 2024

Revised December 2024

Subject to renewal October 2026

This report also contains:

- City of LA Supplement
- FL Supplement w/ HVHZ

ICC-ES Evaluation Reports are not to be construed as representing aesthetics or any other attributes not specifically addressed, nor are they to be construed as an endorsement of the subject of the report or a recommendation for its use. There is no warranty by ICC Evaluation Service, LLC, express or implied, as to any finding or other matter in this report, or as to any product covered by the report.

Copyright © 2024 ICC Evaluation Service, LLC. All rights reserved.

DIVISION: 06 00 00—WOOD, PLASTICS AND COMPOSITES Section: 06 05 23—Wood, Plastic, and Composite Fastenings	REPORT HOLDER: MITEK INC.	EVALUATION SUBJECT: MITEK® FACE MOUNT HANGERS FOR WOOD FRAMED CONSTRUCTION	

1.0 EVALUATION SCOPE

Compliance with the following codes:

- 2024, 2021, 2018, 2015 and 2012 *International Building Code®* (IBC)
- 2024, 2021, 2018, 2015 and 2012 *International Residential Code®* (IRC)

Property evaluated:

Structural

2.0 USES

The MiTek Face Mount Hangers for Wood Framed Construction described in this report (see Table 19 for complete listing) are used for connecting wood framing members in accordance with Section 2304.10.4 of the 2024 and 2021 IBC, Section 2304.10.3 of the 2018 and 2015 IBC and Section 2304.9.3 of the 2012 IBC). The connectors may also be used in structures regulated under the IRC when an engineered design is submitted to, and approved by, the code official, in accordance with Section R301.1.3 of the IRC.

3.0 DESCRIPTION

3.1 CLPBF Butterfly Hanger:

The CLPBF Butterfly Hanger is a face-mount hanger with triangular header flanges having prepunched nail holes for joist-to-header or truss-to-truss connections. The CLPBF Butterfly Hanger is cold-formed from No. 18 gage steel and is prepunched for 10d common nails into the header and 10d-by-$1^1/_2$-inch nails into the joist. See Table 1 and Figure 1 for product dimensions, fastener schedule, allowable loads, and a typical installation detail.

3.2 HD Face Mount Hanger:

The HD Face Mount Hanger is designed to support headers, joists and trusses. The HD Face Mount Hanger is cold-formed from No. 14 gage steel; and is prepunched for 16d common nails into the supporting member, and either 16d common, 10d common or 10d-by-$1^1/_2$-inch nails into the supported member. See Table 2 and Figure 2 for product dimensions, fastener schedule, allowable loads, and typical installation details. The HD, THD, THF and THFI offer increased allowable download and/or uplift values by installing additional nails into the diamond holes. Minimum ('min') load values require the installation of the specified nails into all round

holes of the hanger to support the corresponding allowable loads. Maximum ('max') load values require the installation of the specified nails into all round and all diamond holes of the hanger to support the increased loads. Interpolation is not allowed between the min-max allowable load values and nail count.

3.3 HUS Slant Nail Joist Hanger:

The HUS Slant Nail Joist Hanger is designed to provide double shear nailing for joist/truss-to-beam connections. The HUS Slant Nail Joist Hanger is cold-formed from No. 14 gage or No. 16 gage steel and is prepunched for 16d common nails into both the joist and the header. See Table 3 and Figure 3 for product dimensions, fastener schedule, allowable loads, and typical installation details.

3.4 JL Standard Joist Hangers:

The JL Standard Joist Hangers are designed as face mount hangers for connecting nominal dimension lumber to headers, beams or girders. The JL hangers are cold-formed from No. 20 gage steel. The hangers are prepunched for 16d common or 10d common nails into the header, and 10d-by-$1^1/_2$-inch nails into the joist. See Table 4 and Figure 4 for product dimensions, fastener schedule, allowable loads, and a typical installation detail.

3.5 JN and JNE Power Nail Hangers:

JN and JNE Joist Hangers are designed to support one- and two-ply nominally 2-by-6 and 2-by-8 dimension lumber joists. The JN joist hangers are cold-formed from No.18 gage steel and have a seat depth of $1^5/_8$ inches (41 mm). The JNE joist hangers are cold-formed from No. 20 gage steel and have a seat depth of 2 inches (51 mm). JN and JNE joist hangers are not prepunched for nails. See Table 5 and Figure 5 for product dimensions, required fastener schedule, allowable loads, and a typical installation detail.

3.6 JUS Slant Nail Joist Hanger:

The JUS Slant Nail Joist Hanger is designed for face-mount applications to provide double shear nailing for joist/truss-to-beam connections. The JUS Slant Nail Joist Hanger is cold-formed from No. 18 gage steel and is prepunched for either 10d common or 16d common nails into both the joist and the header. See Table 6 and Figure 6 for product dimensions, fastener schedule, allowable loads, and a typical installation detail.

3.7 SUH Joist Hanger:

The SUH Joist Hanger is designed as a face-mount hanger to support nominal dimension lumber joists. The SUH Joist Hanger is cold-formed from No. 16 gage steel. The SUH Joist Hanger has prongs in the header flanges to temporarily position the hanger on the header. The hanger is prepunched for 10d common or 16d common nails into the header and 10d-by-$1^1/_2$, 10d common, or 16d common nails into the joist. See Table 7 and Figure 7 for product dimensions, fastener schedule, allowable loads, and a typical installation detail.

3.8 THD Face Mount Hanger:

The THD Face Mount Hanger is designed to support metal-plate-connected wood trusses and can also support LVL, LSL and PSL members. The THD Face Mount Hanger is cold-formed from either No. 12 gage, No. 14 gage, or No. 16 gage steel; and is prepunched for 16d common nails into the header, and either 10d common or 10d-by-$1^1/_2$-inch nails into the joist. See Table 8 and Figure 8 for product dimensions, required fastener schedule, allowable loads, and a typical installation detail.

3.9 THDH Face Mount Hanger:

The THDH Face Mount Hanger is designed as a hanger for metal-plate-connected wood trusses and can also support LVL, LSL and PSL members. The THDH Face Mount Hanger is cold-formed from No. 12 gage steel and is prepunched for 16d common nails. See Table 9 and Figure 9 for product dimensions, fastener schedule, allowable loads, and a typical installation detail.

3.10 THF Face Mount Hanger:

The THF Face Mount Hanger is designed to provide lateral top chord support for I-joist-to-header applications. The supporting header may be wood I-joists, LVL, LSL, PSL, or solid sawn lumber. The THF Face Mount Hanger is cold-formed from either No. 18 gage, No. 16 gage, or No. 12 gage steel; and is prepunched for 10d common nails into the header, and either 10d common or 10d-by-$1^1/_2$-inch nails into the joist. See Table 10 and Figure 10 for product dimensions, fastener schedule, allowable loads, and a typical installation detail.

3.11 THFI Face Mount Hanger:

The THFI Face Mount Hanger is designed to provide lateral top chord support for I-joist-to-header applications with the added benefit of having six locking prongs in the hanger seat. The supporting header may be wood I-joists, LVL, LSL, PSL, or solid sawn lumber. The locking prongs provide a consistent uplift capacity for I-joists of all bottom flange thicknesses without the need of hanger-to-joist nails. The THFI also has a patented self-supporting top tab that securely grips to the header and holds the hanger in place without needing manual

assistance while fasteners are installed. The THFI Face Mount Hanger is cold formed from No. 18 gage steel and is prepunched for 10d common nails into the header. See Table 11 and Figure 11 for product dimensions, fastener schedule, allowable loads and a typical installation detail.

3.12 LGU/MGU/HGU Girder Hanger:

The LGU/MGU/HGU Girder Hangers are designed as face mount hangers for attaching glulam beams to glulam headers. Header fasteners are located high on the side flanges to allow a deeper supported member to be attached top flush to a shallower supporting member. The LGU/MGU/HGU Girder Hangers are cold formed from either No. 10 gage or No. 7 gage steel and are prepunched for $^1/_4$-inch-diameter MiTek WS Series WS3 (3-inch-length) wood screws. The MiTek WS Series wood screws are proprietary screws described in ESR-2761 and are shipped with the hangers. The LGU/MGU/HGU Girder Hangers can also be used to attach LVL, LSL and PSL beams and headers together. See Table 12 and Figure 12 for product dimensions, fastener schedule, allowable loads and a typical installation detail.

3.13 THDHQ Girder Truss Hanger:

The THDHQ Girder Truss Hangers are designed as face mount hangers for attaching multi-ply metal plated wooded girder trusses together. The THDHQ hangers are cold formed from No. 12 gage steel and are prepunched for $^1/_4$-inch-diameter MiTek WS Series WS3 (3-inch-length), WS45 ($4^1/_2$-inch-length) or WS6 (6-inch-length) wood screws. The MiTek WS Series wood screws are proprietary screws described in ESR-2761 and are shipped with the THDHQ hangers. The THDHQ hangers can also be used to connect LVL, LSL and PSL beams and headers together. See Table 13 and Figure 13 for product dimensions, fastener schedule, allowable loads and a typical installation detail.

3.14 IHF Face Mount Hanger:

The IHF Face Mount Hanger is designed to resist the gravity and uplift loads from wood I-joists. Sized specifically for wood I-joists, the sides of the IHF Face Mount Hanger provide lateral support to the I-joist top flange. The IHF Face Mount hanger is intended to support wood I-joists with flanges manufactured from structural composite lumber (SCL). Design values for the IHF Face Mount Hanger and I-joist flange property requirements are provided in Table 14. The supporting header may be wood I-joist, LVL, LSL, PSL, or solid sawn lumber. The IHF Face Mount Hanger is cold-formed from No. 16 gage steel, and is prepunched for either 10d common or 16d common nails installed into the header and 10d-by-$1^1/_2$-inch nails installed into the joist flanges. Diamond holes in the hanger flanges for hanger-to-header nailing provide for customizable (MIN/MAX) fastening to match the allowable download capacity needed as indicated in Table 14. The IHF Face Mount Hanger dimensions and typical installations are shown in Figure 14.

3.15 IHFL Face Mount Hanger:

The IHFL Face Mount Hanger is designed to resist the gravity and uplift loads from wood I-joists. Sized specifically for wood I-joists, the sides of the IHFL Face Mount Hanger provide lateral support to the I-joist top flange. The IHFL Face Mount Hanger is intended to support wood I-joists with flanges manufactured from sawn lumber or structural composite lumber (SCL). Design values for the IHFL Face Mount Hanger and I-joist flange property requirements are provided in Table 15. The supporting header may be wood I-joist, LVL, LSL, PSL, or solid sawn lumber. The IHFL Face Mount Hanger is cold-formed from No. 18 gage steel, and is prepunched for 10d common nails installed into the header. Uplift resistance is provided by six Seat Cleat® prongs that lock the bottom flange of the I-joist to the hanger, providing a consistent uplift capacity for I-joist of all bottom flange thicknesses without the installation of hanger-to-joist nails. Additional uplift capacity is provided when two joist nails are installed into the joist bottom flange (see Table 15 Footnote 6). Diamond holes in the hanger flanges for hanger-to-header nailing provide for customizable (MIN/MAX) fastening to match the allowable download capacity needed as indicated in Table 15. The IHFL Face Mount Hanger dimensions and typical installation are shown in Figure 15.

3.16 HDQIF Inverted Flange Face Mount Hangers:

The HDQIF Face Mount Inverted Flange Hanger is designed to support headers, joists, and trusses. The HDQIF Face Mount Hanger is cold-formed from No. 14 gage steel; and is prepunched for $^1/_4$-inch-by-3-inch WS3 wood screws into supporting member, and either $^1/_4$-inch-by-$1^1/_2$-inch WS15 wood screws or $^1/_4$-inch-by-3-inch MiTek WS3 wood screws into the supported member. WS Series wood screws are proprietary screws described in ESR-2761 and are shipped with the hangers. See Table 16 and Figure 16 for product dimensions, fastener schedule, allowable loads and a typical installation detail.

3.17 JLIF-TZ Inverted Flange Face Mount Hangers:

The JLIF-TZ Inverted Flange Joist Hanger is designed as a face-mount hanger to support joists of nominal lumber dimensions. The JLIF-TZ is cold-formed from No. 18 gage steel; and is prepunched for 10d or 16d common nails into the header and 10d-by-$1^1/_2$-inch nails into the joist. See Table 17 and Figure 17 for product dimensions, fastener schedule, allowable loads and a typical installation detail.

3.18 MUS Slant Nail Face Mount Joist Hangers:

The MUS Slant Nail Joist Hanger is designed for face-mount applications to provide double shear nailing for joist/truss-to-beam connections. The MUS Slant Nail Joist Hanger is cold-formed from No. 18 gage steel and is prepunched for 10d common nails into both the header and the joist. See Table 18 and Figure 18 for product dimensions, fastener schedule, allowable loads and a typical installation detail.

3.19 Materials:

3.19.1 Steel: The specific types of steel and corrosion protection for each product are described in Table 19 of this report. Minimum steel base-steel thicknesses for the different gages are shown in the following table:

GAGE NO.	MINIMUM BASE-STEEL THICKNESS (inch)
20	0.033
18	0.044
16	0.055
14	0.070
12	0.099

For **SI:** 1 inch = 25.4 mm.

3.19.2 Wood: Wood members must be sawn lumber or structural glued laminated timber with a minimum specific gravity of 0.50, or approved structural engineered lumber (structural composite lumber, alternative strand lumber, or prefabricated wood I-joists) with a minimum equivalent specific gravity of 0.50, unless otherwise noted in the applicable table within this report. Wood members must have a moisture content not exceeding 19 percent (16 percent for structural glued laminated timber and structural engineered lumber products, except as noted in Section 4.1). For connectors installed with nails, the thickness of each wood member must be sufficient such that the specified fasteners do not protrude through the opposite side of the member, unless otherwise permitted in the applicable table within this report. Wood members that are structural engineered lumber must be recognized in, and used in accordance with, a current evaluation report. Refer to Section 3.19.4 for issues related to treated wood.

3.19.3 Fasteners: Required fastener types and sizes for use with the connectors described in this report are specified in this section and Tables 1 through 18. Nails used for connectors described in this report must be bright or hot-dipped galvanized carbon steel nails complying with material requirements, physical properties, tolerances, workmanship, protective coating and finishes, and packaging and package marking requirements specified in ASTM F1667; and must have lengths, diameters and bending yield strengths as shown in the following table:

FASTENER DESIGNATION	FASTENER LENGTH (inches)	SHANK DIAMETER (inch)	MINIMUM REQUIRED F_{yb} (psi)
P-nail[1]	1.375	0.105	100,000
10d x $1^1/_2$	1.5	0.148	90,000
10d Common	3.0	0.148	90,000
16d Common	3.5	0.162	90,000

For **SI:** 1 inch = 25.4 mm, 1 psi = 6.895 kPa.

[1]The fastener designation "P-nail" refers to power-driven nails described in ESR-1539. The fastener must have a minimum diameter, length, and bending yield strength as specified in this table.

Alternatively, nails of other materials or finishes may be used when they are recognized in an ICC-ES evaluation report as having bending yield strength and withdrawal capacity equal to or better than those of a bright carbon steel of the same nominal diameter.

MiTek WS Series screws used for LGU/MGU/HGU and THDHQ hangers are described in ESR-2761.

3.19.4 Use in Treated Wood: Connectors used in contact with preservative-treated or fire-retardant-treated wood must comply with Section 2304.10.6 of the 2024 and 2021 IBC (Section 2304.10.5 of the 2018 and 2015 IBC, and Section 2304.9.5 of the 2012 IBC) and Section R304.3 of the 2024 IRC (Section R317.3 of the 2021, 2018, 2015 and 2012 IRC. The lumber treater or the report holder (MiTek), or both, should be contacted for recommendations on the appropriate level of corrosion resistance to specify for the connectors. Fasteners used in contact with preservative-treated or fire-retardant-treated wood must be hot-dipped galvanized carbon steel nails. Alternatively, nails of other materials and finishes may be used when they are recognized in an ICC-ES evaluation report for use in the applicable treated lumber and have equivalent or greater capacities as those required in this report.

4.0 DESIGN AND INSTALLATION

4.1 Design:

The allowable load capacities in Tables 1 through 18 are based on allowable stress design. The use of the allowable load values for the products listed in Table 19 of this report must comply with all applicable requirements and conditions specified in this report. Tabulated allowable loads are for normal load duration and/or short load duration, based on load duration factors, C_D, in accordance with Section 11.3.2 of the *National Design Specification® for Wood Construction* (NDS) for the 2024, 2021, 2018 and 2015 IBC and IRC (Section 10.3.2 of the NDS for the 2012 IBC and IRC), as indicated in Tables 1 through 18 of this report. No further increases are permitted for load durations other than those specified. Tabulated allowable loads are for connections in wood seasoned to a maximum moisture content of 19 percent (16 percent for structural glued laminated timber and structural engineered lumber products) or less, used under continuously dry conditions and where sustained temperatures are limited to 100°F (37.8°C) or less. When connectors are installed in wood having a moisture content greater than 19 percent (16 percent for engineered wood products), or where the in-service moisture content is expected to exceed this value, the applicable wet service factor, C_M, must be applied. Unless otherwise noted in the tables of this report, the applicable wet service factor, C_M, is as specified in the NDS for lateral loading of dowel-type fasteners. When connectors are installed in wood that will experience sustained exposure to temperatures exceeding 100°F (37.8°C), the allowable loads in this evaluation report must be adjusted by the temperature factor, C_t, specified in Section 11.3.4 of the NDS for the 2024, 2021, 2018 and 2015 IBC and IRC (Section 10.3.4 of the NDS for the 2012 IBC and IRC). Connected wood members must be checked for load-carrying capacity at the connection in accordance with NDS Section 11.1.2 for the 2024, 2021, 2018 and 2015 IBC and IRC (Section 10.1.2 of the NDS for the 2012 IBC and IRC).

4.2 Installation:

Installation of the connectors must be in accordance with this evaluation report and the manufacturer's published installation instructions.

4.3 Special Inspection:

4.3.1 Main Wind Force-Resisting Systems under the IBC: Periodic special inspection must be conducted for components within the main windforce-resisting system, where required in accordance with Sections 1704.2 and 1705.12 of the 2024 and 2021 IBC (Sections 1704.2 and 1705.11 of the 2018 and 2015 IBC and Section 1705.10 of the 2012 IBC).

4.3.2 Seismic Force-Resisting Systems under the IBC: Periodic special inspection must be conducted for components within the seismic force-resisting system, where required in accordance with Sections 1704.2 and 1705.13 of the 2024 and 2021 IBC (Sections 1704.2 and 1705.12 of the 2018 and 2015 IBC and Section 1705.11 of the 2012 IBC).

4.3.3 Installations under the IRC: Special inspections are normally not required for connectors used in structures regulated under the IRC. However, for components and systems requiring an engineered design in accordance with IRC Section R301, periodic special inspection requirements and exemptions must be in accordance with Sections 4.3.1 and 4.3.2 of this report.

5.0 CONDITIONS OF USE:

The MiTek Face Mount Hangers described in this report comply with, or are suitable alternatives to what is specified in, those codes listed in Section 1.0 of this report, subject to the following conditions:

5.1 The connectors must be manufactured, identified and installed in accordance with this report and the manufacturer's published installation instructions. A copy of the manufacturer's published installation instructions must be available at the jobsite at all times during installation. In the event of a conflict between this report and the manufacturer's published installation instructions, this report governs.

5.2 Calculations showing compliance with this report must be submitted to the code official. The calculations must be prepared by a registered design professional where required by the statutes of the jurisdiction in which the project is to be constructed.

5.3 Connected wood members and fasteners must comply with Sections 3.19.2 and 3.19.3, respectively.

5.4 Adjustment factors, noted in Section 4.1 of this report and the applicable codes, must be considered where applicable.

5.5 Use of connectors and fasteners with preservative-treated or fire-retardant-treated lumber must be in accordance with Section 3.19.4.

5.6 The connectors are manufactured under an approved quality control program with inspections by ICC-ES.

6.0 EVIDENCE SUBMITTED

Data in accordance with the ICC-ES Acceptance Criteria for Joist Hangers and Similar Devices (AC13), approved October 2018 (editorially revised February 2024).

7.0 IDENTIFICATION

7.1 The connectors described in this report are identified by the product model (stock) number, the number of the ICC-ES index evaluation report for MiTek (ESR-2685), and by one or more of the following designations: MiTek, USP or USP Structural Connectors.

7.2 The report holder's contact information is the following:

MITEK INC.
16023 SWINGLEY RIDGE ROAD
CHESTERFIELD, MISSOURI 63017
(800) 328-5934
www.mitek-us.com

TABLE 1—CLPBF BUTTERFLY HANGER ALLOWABLE LOADS[1,2,3,4]

STOCK NO.	JOIST WIDTH (in.)	STEEL GA.	DIMENSIONS			FASTENER SCHEDULE				ALLOWABLE LOADS (lbs)			
						Header		Joist		Download			Uplift
			W	H	D	Qty	Type	Qty	Type	C_D=1.0	C_D=1.15	C_D=1.25	C_D=1.60
CLPBF	$1^1/_2$	18	$1^9/_{16}$	$2^1/_2$	$2^1/_2$	12	10d Common	6	10d x $1^1/_2$	1,340	1,340	1,340	195

For **SI:** 1 inch = 25.4 mm, 1 lb. = 4.45 N.

[1]Allowable loads have been adjusted for load duration factors, C_D, as shown, in accordance with the NDS. The allowable loads do not apply to loads of other durations, and are not permitted to be adjusted for other load durations. See Sections 4.1 and 4.2 for additional design and installation requirements.
[2]See Section 3.19.3 for required fastener dimensions and mechanical properties.
[3]Allowable loads shown are for installations in wood members complying with Section 3.19.2. Wood members must also have a minimum reference compression perpendicular to grain design value, $F_{c\text{-}perp}$, of 625 psi (4.31 MPa).
[4]CLPBF hangers provide torsional resistance, up to a maximum joist depth of 3.5 inches (88.9 mm), where torsional resistance is defined as a moment not less than 75 pounds (334 N) times the depth of the joist, at which the lateral movement of the top or bottom of the joist with respect to the vertical position of the joist is 0.125 inch (3.2 mm).

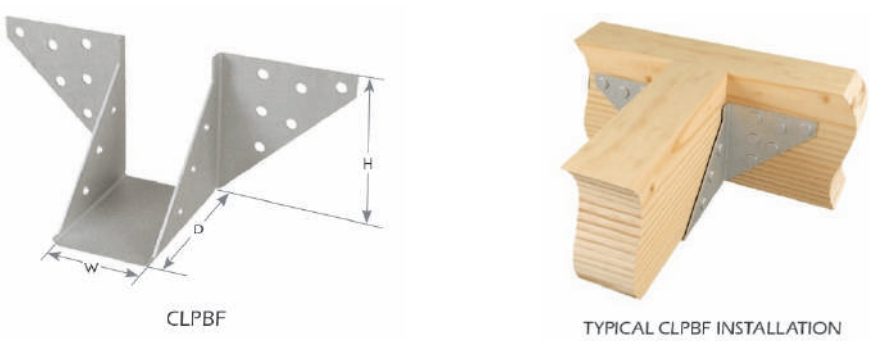

FIGURE 1—CLPBF BUTTERFLY HANGER

TABLE 3—HUS SLANT NAIL JOIST HANGER ALLOWABLE LOADS[1,2,3,4,6]

STOCKNO.	STEEL GAGE	DIMENSIONS (in.)				FASTENER SCHEDULE				ALLOWABLE DESIGN LOADS (lbs)			
		W	H	D	A	Header		Joist[5]		Download			Uplift
						Qty	Type	Qty	Type	C_D = 1.0	C_D = 1.15	C_D = 1.25	C_D = 1.6
HUS26	16	$1^5/_8$	$5^7/_{16}$	3	2	14	16d Common	6	16d Common	2,760	3,140	3,400	2,045
HUS28	16	$1^5/_8$	$7^3/_{16}$	3	2	22	16d Common	8	16d Common	4,170	4,745	5,125	2,990
HUS210	16	$1^5/_8$	$9^3/_{16}$	3	2	30	16d Common	10	16d Common	5,455	5,825	6,060	4,110
HUS175	16	$1^{13}/_{16}$	$5^3/_8$	3	2	14	16d Common	6	16d Common	2,760	3,140	3,400	2,045
HUS177	16	$1^{13}/_{16}$	$7^1/_8$	3	2	22	16d Common	8	16d Common	4,170	4,745	5,125	2,990
HUS179	16	$1^{13}/_{16}$	$9^1/_8$	3	2	30	16d Common	10	16d Common	5,580	6,060	6,060	4,110
HUS24-2	14	$3^1/_8$	$3^7/_{16}$	2	1	4	16d Common	2	16d Common	850	965	1,040	765
HUS26-2	14	$3^1/_8$	$5^1/_4$	2	1	4	16d Common	4	16d Common	1,085	1,235	1,330	1,170
HUS28-2	14	$3^1/_8$	$7^1/_8$	2	1	6	16d Common	6	16d Common	1,625	1,850	1,880	2,420
HUS210-2	14	$3^1/_8$	$9^1/_8$	2	1	8	16d Common	8	16d Common	2,170	2,465	2,660	2,420
HUS212-2	14	$3^1/_8$	$11^1/_8$	2	1	10	16d Common	10	16d Common	2,710	3,080	3,325	3,615
HUS46	14	$3^5/_8$	5	2	1	4	16d Common	4	16d Common	1,085	1,235	1,330	1,170
HUS48	14	$3^5/_8$	7	2	1	6	16d Common	6	16d Common	1,625	1,850	1,880	2,420
HUS410	14	$3^5/_8$	$8^7/_8$	2	1	8	16d Common	8	16d Common	2,170	2,465	2,660	2,420
HUS412	14	$3^5/_8$	$10^7/_8$	2	1	10	16d Common	10	16d Common	2,710	3,080	3,325	3,615

For **SI:** 1 inch = 25.4 mm, 1 lbf = 4.45 N.

[1]Allowable loads have been adjusted for load duration factors, C_D, as shown, in accordance with the NDS. The allowable loads do not apply to loads of other durations, and are not permitted to be adjusted for other load durations. See Sections 4.1 and 4.2 for additional design and installation requirements.

[2]Allowable loads shown are for installations in wood members complying with Section 3.19.2. Wood members must also have a minimum reference compression perpendicular to grain design value, $F_{c\text{-}perp}$, of 625 psi (4.31 MPa).

[3]See Section 3.19.3 for required fastener dimensions and mechanical properties.

[4]HUS hangers provide torsional resistance, where torsional resistance is defined as a moment not less than 75 pounds (334 N) times the depth of the joist, at which the lateral movement of the top or bottom of the joist with respect to the vertical position of the joist is 0.125 inch (3.2 mm).

[5]Joist nails must be driven horizontally into the joist at an angle of 30- to 45-degrees from normal, such that they penetrate through the joist and into the header.

[6]HUS-IF inverted flange hangers are available in widths of $2^1/_4$ inches or greater at the same design loads as corresponding HUS models.

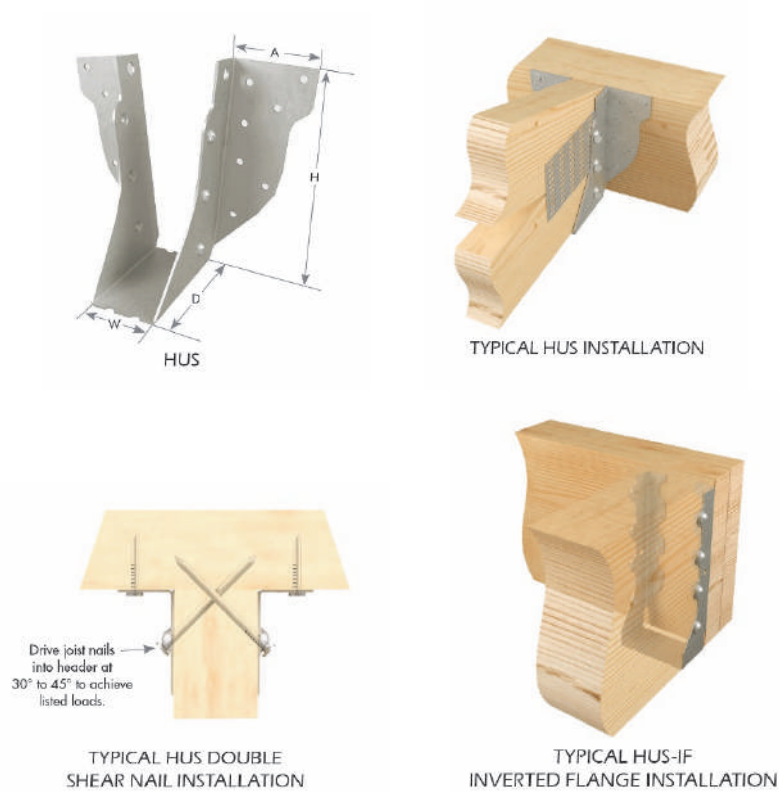

FIGURE 3—HUS SLANT NAIL JOIST HANGER

TABLE 6—JUS SLANT NAIL JOIST HANGER ALLOWABLE LOADS[1,2,3,4]

STOCK NO.	STEEL GAGE	DIMENSIONS (in.)				FASTENER SCHEDULE				ALLOWABLE DESIGN LOADS (lbs)			
		W	H	D	A	Header		Joist		Download			Uplift
						Qty	Type	Qty	Type	C_D = 1.0	C_D = 1.15	C_D = 1.25	C_D = 1.6
JUS24	18	$1^9/_{16}$	$3^1/_8$	$1^3/_4$	1	4	10d Common	2	10d Common	675	775	835	660
JUS26	18	$1^9/_{16}$	$4^{13}/_{16}$	$1^3/_4$	1	4	10d Common	4	10d Common	870	1,000	1,080	1,050
JUS28	18	$1^9/_{16}$	$6^5/_8$	$1^3/_4$	1	6	10d Common	4	10d Common	1,110	1,270	1,375	1,050
JUS210	18	$1^9/_{16}$	$7^3/_4$	$1^3/_4$	1	8	10d Common	4	10d Common	1,350	1,545	1,670	1,050
JUS36	18	$2^9/_{16}$	$5^1/_4$	2	1	4	16d Common	4	16d Common	1,040	1,185	1,290	1,270
JUS38	18	$2^9/_{16}$	$6^3/_4$	2	1	6	16d Common	4	16d Common	1,325	1,510	1,645	1,270
JUS310	18	$2^9/_{16}$	$9^1/_8$	2	1	8	16d Common	6	16d Common	1,845	2,105	2,290	2,345
JUS24-2	18	$3^1/_8$	$3^7/_{16}$	2	1	4	16d Common	2	16d Common	805	900	900	660
JUS26-2	18	$3^1/_8$	$5^1/_4$	2	1	4	16d Common	4	16d Common	1,040	1,185	1,290	1,270
JUS28-2	18	$3^1/_8$	$7^1/_8$	2	1	6	16d Common	4	16d Common	1,325	1,510	1,645	1,270
JUS210-2	18	$3^1/_8$	$9^1/_8$	2	1	8	16d Common	6	16d Common	1,845	2,105	2,290	2,345
JUS214-2	18	$3^1/_8$	$13^1/_8$	2	1	12	16d Common	6	16d Common	2,420	2,755	2,830	2,345
JUS44	18	$3^5/_8$	$3^1/_4$	2	1	4	16d Common	2	16d Common	780	780	780	660
JUS46	18	$3^5/_8$	5	2	1	4	16d Common	4	16d Common	1,040	1,185	1,290	1,270
JUS48	18	$3^5/_8$	$6^7/_8$	2	1	6	16d Common	4	16d Common	1,325	1,510	1,645	1,270
JUS410	18	$3^5/_8$	$8^7/_8$	2	1	8	16d Common	6	16d Common	1,845	2,105	2,290	2,345
JUS412	18	$3^5/_8$	$10^7/_8$	2	1	10	16d Common	6	16d Common	2,130	2,405	2,405	2,345
JUS414	18	$3^5/_8$	$12^7/_8$	2	1	12	16d Common	6	16d Common	2,405	2,405	2,405	2,345
JUS24-3	18	$4^5/_8$	$2^3/_4$	2	1	4	16d Common	2	16d Common	805	900	900	660
JUS26-3	18	$4^5/_8$	$4^1/_2$	2	1	4	16d Common	4	16d Common	1,040	1,185	1,290	1,270
JUS28-3	18	$4^5/_8$	$6^3/_8$	2	1	6	16d Common	4	16d Common	1,325	1,510	1,645	1,270
JUS210-3	18	$4^5/_8$	$8^3/_8$	2	1	8	16d Common	6	16d Common	1,845	2,105	2,290	2,345
JUS212-3	18	$4^5/_8$	$10^3/_8$	2	1	10	16d Common	6	16d Common	2,130	2,405	2,405	2,345
JUS214-3	18	$4^5/_8$	$12^3/_8$	2	1	12	16d Common	6	16d Common	2,405	2,405	2,405	2,345

For **SI:** 1 inch = 25.4 mm, 1 lbf = 4.45 N.

[1]Allowable loads have been adjusted for load duration factors, C_D, as shown, in accordance with the NDS. The allowable loads do not apply to loads of other durations, and are not permitted to be adjusted for other load durations. See Sections 4.1 and 4.2 for additional design and installation requirements.
[2]Allowable loads shown are for installations in wood members complying with Section 3.19.2. Wood members must also have a minimum reference compression perpendicular to grain design value, $F_{c\text{-}perp}$, of 625 psi (4.31 MPa).
[3]See Section 3.19.3 for required fastener dimensions and mechanical properties.
[4]JUS hangers provide torsional resistance, up to a maximum joist depth of H + 1.0 inch (H + 25.4 mm) where torsional resistance is defined as a moment not less than 75 pounds (334 N) times the depth of the joist, at which the lateral movement of the top or bottom of the joist with respect to the vertical position of the joist is 0.125 inch (3.2 mm).
[5]Joist nails must be driven horizontally into the joist at an angle of 30- to 45-degrees from normal, such that they penetrate through the joist and into the header.

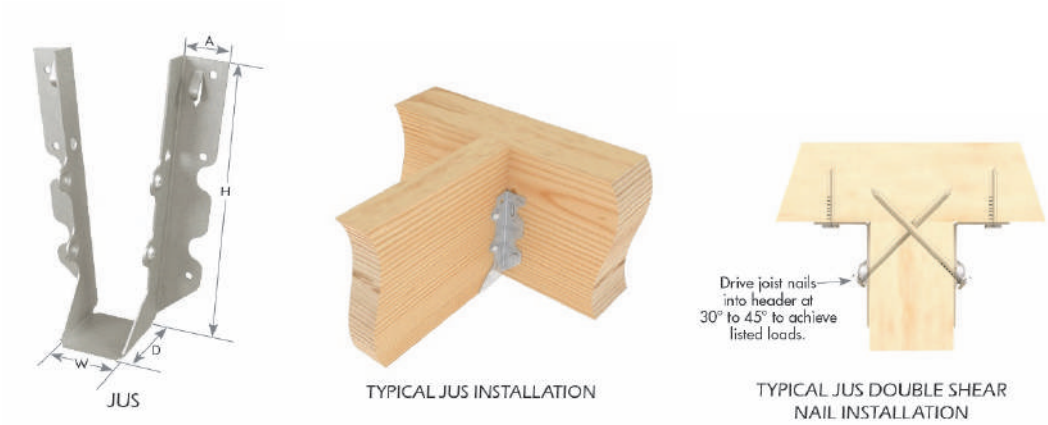

FIGURE 6—JUS SLANT NAIL JOIST HANGER

TABLE 9—THDH FACE MOUNT HANGER ALLOWABLE LOADS[1,2,3,4]

STOCK NO.	STEEL GAGE	DIMENSIONS (in.)			FASTENER SCHEDULE				ALLOWABLE LOADS (lbs)			
					Header		Joist		Download			Uplift
		W	H	D	Qty	Type	Qty	Type	C_D = 1.0	C_D = 1.15	C_D = 1.25	C_D = 1.6
THDH26	12	1 5/8	5 7/16	5	20	16d Common	8	16d Common	4,375	4,895	5,180	2,805
THDH28	12	1 5/8	7 3/16	5	36	16d Common	12	16d Common	7,595	8,175	8,175	4,345
THDH210	12	1 5/8	9 3/16	5	46	16d Common	16	16d Common	9,310	9,710	9,710	5,290
THDH27925	12	2 3/4	9 1/8	4	46	16d Common	12	16d Common	9,020	9,020	9,020	4,345
THDH27112	12	2 3/4	10 7/8	4	56	16d Common	14	16d Common	9,710	9,710	9,710	4,345
THDH2714	12	2 3/4	12 1/4	4	66	16d Common	16	16d Common	11,185	11,325	11,325	5,290
THDH26-2	12	3 7/16	5 3/8	4	20	16d Common	8	16d Common	4,375	4,895	5,180	2,805
THDH28-2	12	3 7/16	7 1/8	4	36	16d Common	10	16d Common	7,360	8,175	8,175	3,000
THDH210-2	12	3 7/16	9 1/8	4	46	16d Common	12	16d Common	9,020	9,020	9,020	4,345
THDH212-2	12	3 3/8	10 1/2	4	56	16d Common	14	16d Common	9,710	9,710	9,710	4,345
THDH214-2	12	3 3/8	12 1/4	4	66	16d Common	16	16d Common	11,325	11,325	11,325	5,290
THDH3210	12	3 3/16	9 3/8	4	46	16d Common	12	16d Common	9,020	9,020	9,020	4,345
THDH3212	12	3 3/16	10 5/8	4	56	16d Common	14	16d Common	9,710	9,710	9,710	5,290
THDH46	12	3 9/16	5 3/8	4	20	16d Common	8	16d Common	4,375	4,895	5,180	2,805
THDH48	12	3 9/16	7 1/8	4	36	16d Common	10	16d Common	7,360	8,175	8,175	3,000
THDH410	12	3 9/16	9 1/8	4	46	16d Common	12	16d Common	9,020	9,020	9,020	4,345
THDH412	12	3 9/16	10 1/2	4	56	16d Common	14	16d Common	9,710	9,710	9,710	5,290
THDH414	12	3 9/16	13 1/16	4	66	16d Common	16	16d Common	11,325	11,325	11,325	5,305
THDH26-3	12	5 1/8	5 7/16	4	20	16d Common	8	16d Common	4,375	4,895	5,180	2,805
THDH28-3	12	5 1/8	7 3/16	4	36	16d Common	12	16d Common	7,595	8,175	8,175	4,345
THDH210-3	12	5 1/8	9 3/16	4	46	16d Common	16	16d Common	9,710	9,710	9,710	5,290
THDH212-3	12	5 1/8	11 3/16	4	56	16d Common	20	16d Common	9,530	9,530	9,530	5,290
THDH214-3	12	5 1/8	13 3/16	4	66	16d Common	22	16d Common	11,325	11,325	11,325	5,305
THDH5210	12	5 3/8	9 1/8	4	46	16d Common	16	16d Common	9,710	9,710	9,710	5,290
THDH5212	12	5 3/8	11 1/8	4	56	16d Common	20	16d Common	9,530	9,530	9,530	5,290
THDH5214	12	5 3/8	13 1/8	4	66	16d Common	22	16d Common	11,325	11,325	11,325	5,305
THDH610	12	5 1/2	9	4	46	16d Common	16	16d Common	9,020	9,020	9,020	5,290
THDH612	12	5 1/2	11	4	56	16d Common	20	16d Common	9,530	9,530	9,530	5,290
THDH614	12	5 1/2	13	4	66	16d Common	22	16d Common	11,325	11,325	11,325	5,305
THDH26-4	12	6 9/16	5 7/16	4	20	16d Common	8	16d Common	4,375	4,895	5,180	2,805
THDH28-4	12	6 7/16	7 9/16	4	36	16d Common	12	16d Common	7,595	8,175	8,175	4,345
THDH6710	12	6 7/8	8 13/16	4	46	16d Common	12	16d Common	9,020	9,020	9,020	4,345
THDH6712	12	6 7/8	10 13/16	4	56	16d Common	14	16d Common	9,020	9,020	9,020	5,290
THDH6714	12	6 7/8	12 13/16	4	66	16d Common	16	16d Common	11,325	11,325	11,325	5,305
THDH7210	12	7 1/4	9	4	46	16d Common	12	16d Common	9,020	9,020	9,020	4,345
THDH7212	12	7 1/4	10 1/2	4	56	16d Common	14	16d Common	9,020	9,020	9,020	5,290
THDH7214	12	7 1/4	12 1/4	4	66	16d Common	16	16d Common	11,325	11,325	11,325	5,305

For **SI:** 1 inch = 25.4 mm, 1 lbf = 4.45 N.

[1]Allowable loads have been adjusted for load duration factors, C_D, as shown, in accordance with the NDS. The allowable loads do not apply to loads of other durations, and are not permitted to be adjusted for other load durations. See Sections 4.1 and 4.2 for additional design and installation requirements.

[2]Allowable loads shown are for installations in wood members complying with Section 3.19.2. Wood members must also have a minimum reference compression perpendicular to grain design value, $F_{c\text{-}perp}$, of 625 psi (4.31 MPa).

[3]See Section 3.19.3 for required fastener dimensions and mechanical properties.

[4]THDH hangers provide torsional resistance, up to a maximum joist depth of H + 1.0 inch (H + 25.4 mm) where torsional resistance is defined as a moment not less than 75 pounds (334 N) times the depth of the joist, at which the lateral movement of the top or bottom of the joist with respect to the vertical position of the joist is 0.125 inch (3.2 mm).

[5]Joist nails must be driven horizontally into the joist at an angle of 30- to 45-degrees from normal, such that they penetrate through the joist, and into the header.

FIGURE 9—THDH FACE MOUNT HANGER

TABLE 19—STEEL TYPE, STRENGTH AND CORROSION RESISTANCE

Product	Steel	Coating[1]
CLPBF Butterfly Hanger	ASTM A653, SS designation, Grade 40	G90
HD Face Mount Hanger	ASTM A653, SS designation, Grade 40	G90
HUS Slant Nail Joist Hanger	ASTM A653, SS designation, Grade 40	G90, G185
JL Standard Joist Hanger	ASTM A653, SS designation, Grade 40	G90
JN Power Nail Hanger	ASTM A653, SS designation, Grade 40	G90
JNE Power Nail Hanger	ASTM A653, SS designation, Grade 40	G90
JUS Slant Nail Joist Hanger	ASTM A653, SS designation, Grade 40	G90, G185
SUH Joist Hanger	ASTM A653, SS designation, Grade 40	G90
THD Face Mount Hanger	ASTM A653, SS designation, Grade 40	G90, G185
THDH Face Mount Hanger	ASTM A653, SS designation, Grade 40	G90, G185
THF Face Mount Hanger	ASTM A653, SS designation, Grade 40	G90
THFI Face Mount Hanger	ASTM A653, SS designation, Grade 40	G90
LGU/MGU/HGU Girder Hanger	ASTM A653, SS designation, Grade 40	G90
THDHQ Girder Truss Hanger	ASTM A653, SS designation, Grade 40	G90
IHF Face Mount Hanger	ASTM A653, SS designation, Grade 40	G90
IHFL Face Mount Hanger	ASTM A653, SS designation, Grade 40	G90
HDQIF Inverted Flange Face Mount Hangers	ASTM A653, SS designation, Grade 40	G90
JLIF-TZ Inverted Flange Face Mount Hangers	ASTM A653, SS designation, Grade 40	G185
MUS Slant Nail Face Mount Joist Hangers	ASTM A653, SS designation, Grade 40	G90

[1]Corrosion protection is a zinc coating in accordance with ASTM A653.

DIVISION: 06 00 00—WOOD, PLASTICS AND COMPOSITES
Section: 06 05 23—Wood, Plastic, and Composite Fastenings

REPORT HOLDER:

MITEK® INC.

EVALUATION SUBJECT:

MITEK® FACE MOUNT HANGERS FOR WOOD FRAMED CONSTRUCTION

1.0 REPORT PURPOSE AND SCOPE

Purpose:

The purpose of this evaluation report supplement is to indicate that MiTek face mount hangers for wood framed construction, described in ICC-ES evaluation report ESR-3445, have also been evaluated for compliance with the codes noted below as adopted by the Los Angeles Department of Building and Safety (LADBS).

Applicable code editions:

- 2023 *City of Los Angeles Building Code* (LABC)
- 2023 *City of Los Angeles Residential Code* (LARC)

2.0 CONCLUSIONS

The MiTek face mount hangers for wood framed construction, described in Sections 2.0 through 7.0 of the evaluation report ESR-3445, comply with the LABC Chapter 23, and the LARC, and are subject to the conditions of use described in this supplement.

3.0 CONDITIONS OF USE

The MiTek face mount hangers for wood framed construction, described in this evaluation report supplement must comply with all of the following conditions:

- All applicable sections in the evaluation report ESR-3445.
- The design, installation, conditions of use and identification are in accordance with the 2021 *International Building Code®* (IBC) provisions noted in the evaluation report ESR-3445.
- The design, installation and inspection are in accordance with additional requirements of LABC Chapters 16 and 17, as applicable.
- The supported end of joist or beam must be within $^{1}/_{4}$-inch from the supporting member.
- Solid blocking must be required for all joist hangers supporting roof joists having one end twisted more than one-half degree per foot of length relative to the other end, except as specifically noted in the evaluation report.
- Under the LARC, an engineered design in accordance with LARC Section R301.1.3 must be submitted.

This evaluation report supplement expires concurrently with the evaluation report ESR-3445, reissued October 2024 and revised December 2024.

ICC-ES Evaluation Reports are not to be construed as representing aesthetics or any other attributes not specifically addressed, nor are they to be construed as an endorsement of the subject of the report or a recommendation for its use. There is no warranty by ICC Evaluation Service, LLC, express or implied, as to any finding or other matter in this report, or as to any product covered by the report.

Copyright © 2024 ICC Evaluation Service, LLC. All rights reserved.

DIVISION: 06 00 00—WOOD, PLASTICS AND COMPOSITES
Section: 06 05 23—Wood, Plastic, and Composite Fastenings

REPORT HOLDER:

MITEK®, INC.

EVALUATION SUBJECT:

MITEK® FACE MOUNT HANGERS FOR WOOD FRAMED CONSTRUCTION

1.0 REPORT PURPOSE AND SCOPE

Purpose:

The purpose of this evaluation report supplement is to indicate that MiTek face mount hangers for wood framed construction, described in ICC-ES evaluation report ESR-3445, have also been evaluated for compliance with the codes noted below.

Applicable code editions:

- 2023 *Florida Building Code—Building*
- 2023 *Florida Building Code—Residential*

2.0 CONCLUSIONS

The MiTek face mount hangers for wood wood framed construction, described in Sections 2.0 through 7.0 of the evaluation report ESR-3445, comply with the *Florida Building Code—Building* and the *Florida Building Code—Residential*. The design requirements must be determined in accordance with the *Florida Building Code—Building* or the *Florida Building Code—Residential*, as applicable. The installation requirements noted in the evaluation report ESR-3445 for the 2021 *International Building Code®* meet the requirements of the *Florida Building Code—Building* or the *Florida Building Code—Residential*, as applicable.

Use of the MiTek face mount hangers for wood framed construction has also been found to be in compliance with the High-Velocity Hurricane Zone (HVHZ) provisions of the *Florida Building Code—Building* and the *Florida Building Code—Residential* with the following condition:

a) For connections subject to uplift, the connection must be designed for no less than 700 pounds (3114 N).

For products falling under Florida Rule 61G20-3, verification that the report holder's quality assurance program is audited by a quality assurance entity approved by the Florida Building Commission for the type of inspections being conducted is the responsibility of an approved validation entity (or the code official, when the report holder does not possess an approval by the Commission).

This evaluation report supplement expires concurrently with the evaluation report ESR-3445, reissued October 2024 and revised December 2024.

ICC-ES Evaluation Reports are not to be construed as representing aesthetics or any other attributes not specifically addressed, nor are they to be construed as an endorsement of the subject of the report or a recommendation for its use. There is no warranty by ICC Evaluation Service, LLC, express or implied, as to any finding or other matter in this report, or as to any product covered by the report.

Copyright © 2024 ICC Evaluation Service, LLC. All rights reserved.

FL #	FL17236-R10
Application Type	Revision
Code Version	2023
Application Status	Approved
	*Approved by DBPR. Approvals by DBPR shall be reviewed and ratified by the POC and/or the Commission if necessary.
Comments	
Archived	☐
Product Manufacturer	MiTek Inc.
Address/Phone/Email	16023 Swingley Ridge Road Chesterfield, MO 63017 (800) 328-5934 bpr@mii.com
Authorized Signature	Erin Walden bpr@mii.com
Technical Representative	Erin M. Walden
Address/Phone/Email	16023 Swingley Ridge Road Chesterfield, MO 63017 (952) 898-8635 ewalden@mii.com
Quality Assurance Representative	Erin M. Walden
Address/Phone/Email	16023 Swingley Ridge Road Chesterfield, MO 63017 (952) 898-8635 ewalden@mii.com
Category	Structural Components
Subcategory	Wood Connectors
Compliance Method	Evaluation Report from a Product Evaluation Entity
Evaluation Entity	ICC Evaluation Service, LLC
Quality Assurance Entity	ICC-ES Evaluation Service, LLC
Quality Assurance Contract Expiration Date	10/31/2026
Validated By	ICC Evaluation Service, LLC.
Certificate of Independence	FL17236_R10_COI_ICC-ES Certification of Independence for Evaluation 2024 (1).pdf

Referenced Standard and Year (of Standard)

Standard	Year
ANSI/AWC NDS	2018
ASTM D7147	2011

Equivalence of Product Standards Certified By

Sections from the Code

Product Approval Method	Method 1 Option C
Date Submitted	10/24/2024
Date Validated	10/24/2024
Date Pending FBC Approval	
Date Approved	10/26/2024

Summary of Products

FL #	Model, Number or Name	Description
17236.1	BN264, BN284	BN Breakfast Nook Hanger
Limits of Use **Approved for use in HVHZ:** No **Approved for use outside HVHZ:** Yes **Impact Resistant:** N/A **Design Pressure:** N/A **Other:**		**Installation Instructions** FL17236_R10_II_ESR-3448 Oct 2024.pdf Verified By: ICC Evaluation Service, LLC Created by Independent Third Party: **Evaluation Reports** FL17236_R10_AE_ESR-3448 Oct 2024.pdf
17236.2	DSC4L/R, LDSC4L/R	DSC/LDSC Drag Strut Connector
Limits of Use **Approved for use in HVHZ:** Yes **Approved for use outside HVHZ:** Yes **Impact Resistant:** N/A **Design Pressure:** N/A **Other:**		**Installation Instructions** FL17236_R10_II_ESR-3448 Oct 2024.pdf Verified By: ICC Evaluation Service, LLC Created by Independent Third Party: **Evaluation Reports** FL17236_R10_AE_ESR-3448 Oct 2024.pdf
17236.3	FTC1, FTC1F, FTC2, FTC2F	FTC Floor Truss Clip
Limits of Use **Approved for use in HVHZ:** Yes **Approved for use outside HVHZ:** Yes **Impact Resistant:** N/A **Design Pressure:** N/A **Other:**		**Installation Instructions** FL17236_R10_II_ESR-3448 Oct 2024.pdf Verified By: ICC Evaluation Service, LLC Created by Independent Third Party: **Evaluation Reports** FL17236_R10_AE_ESR-3448 Oct 2024.pdf
17236.4	FTC32	FTC Floor Truss Clip
Limits of Use **Approved for use in HVHZ:** No **Approved for use outside HVHZ:** Yes **Impact Resistant:** N/A **Design Pressure:** N/A **Other:**		**Installation Instructions** FL17236_R10_II_ESR-3448 Oct 2024.pdf Verified By: ICC Evaluation Service, LLC Created by Independent Third Party: **Evaluation Reports** FL17236_R10_AE_ESR-3448 Oct 2024.pdf
17236.5	GT2T2B, GT2T2BH, GT2T3B, GT2T4B, GT2T6B, GT2T6BH, GT2T8B, GT3T3B, GT3T3BH, GT3T4B, GT3T4BH, GT3T6B, GT3T6BH, GT3T8B, GT3T8BH, GT4T4B, GT4T4BH, GT4T6B, GT4T6BH, GT4T8B, GT5T8BH	GT Girder Truss Hanger
Limits of Use **Approved for use in HVHZ:** Yes **Approved for use outside HVHZ:** Yes **Impact Resistant:** N/A **Design Pressure:** N/A **Other:**		**Installation Instructions** FL17236_R10_II_ESR-3448 Oct 2024.pdf Verified By: ICC Evaluation Service, LLC Created by Independent Third Party: **Evaluation Reports** FL17236_R10_AE_ESR-3448 Oct 2024.pdf
17236.6	HCPRS	HCPRS Hurricane/Seismic Anchor
Limits of Use **Approved for use in HVHZ:** No **Approved for use outside HVHZ:** Yes **Impact Resistant:** N/A **Design Pressure:** N/A **Other:**		**Installation Instructions** FL17236_R10_II_ESR-3448 Oct 2024.pdf Verified By: ICC Evaluation Service, LLC Created by Independent Third Party: **Evaluation Reports** FL17236_R10_AE_ESR-3448 Oct 2024.pdf
17236.7	HGA10	HGA Hurricane Gusset Angle
Limits of Use **Approved for use in HVHZ:** Yes **Approved for use outside HVHZ:** Yes		**Installation Instructions** FL17236_R10_II_ESR-3448 Oct 2024.pdf Verified By: ICC Evaluation Service, LLC

Impact Resistant: N/A **Design Pressure:** N/A **Other:**		Created by Independent Third Party: **Evaluation Reports** FL17236_R10_AE_ESR-3448 Oct 2024.pdf
17236.8	HHCP2	HHCP Hurricane/Seismic Anchor
Limits of Use **Approved for use in HVHZ:** No **Approved for use outside HVHZ:** Yes **Impact Resistant:** N/A **Design Pressure:** N/A **Other:**		**Installation Instructions** FL17236_R10_II_ESR-3448 Oct 2024.pdf Verified By: ICC Evaluation Service, LLC Created by Independent Third Party: **Evaluation Reports** FL17236_R10_AE_ESR-3448 Oct 2024.pdf
17236.9	HHCP4	HHCP Hurricane/Seismic Anchor
Limits of Use **Approved for use in HVHZ:** Yes **Approved for use outside HVHZ:** Yes **Impact Resistant:** N/A **Design Pressure:** N/A **Other:**		**Installation Instructions** FL17236_R10_II_ESR-3448 Oct 2024.pdf Verified By: ICC Evaluation Service, LLC Created by Independent Third Party: **Evaluation Reports** FL17236_R10_AE_ESR-3448 Oct 2024.pdf
* 17236.10	HJC26, HJC28	HJC Hip/Jack Connector
Limits of Use **Approved for use in HVHZ:** Yes **Approved for use outside HVHZ:** Yes **Impact Resistant:** N/A **Design Pressure:** N/A **Other:**		**Installation Instructions** FL17236_R10_II_ESR-3448 Oct 2024.pdf Verified By: ICC Evaluation Service, LLC Created by Independent Third Party: **Evaluation Reports** FL17236_R10_AE_ESR-3448 Oct 2024.pdf
17236.11	RT3A, RT4, RT5, RT6, RT7, RT7A,RT7AT, RT10, RT15	RT Hurricane Tie
Limits of Use **Approved for use in HVHZ:** No **Approved for use outside HVHZ:** Yes **Impact Resistant:** N/A **Design Pressure:** N/A **Other:**		**Installation Instructions** FL17236_R10_II_ESR-3448 Oct 2024.pdf Verified By: ICC Evaluation Service, LLC Created by Independent Third Party: **Evaluation Reports** FL17236_R10_AE_ESR-3448 Oct 2024.pdf
17236.12	RT8A, RT16-2, RT16A, RT16AR, RT20	RT Hurricane Tie
Limits of Use **Approved for use in HVHZ:** Yes **Approved for use outside HVHZ:** Yes **Impact Resistant:** N/A **Design Pressure:** N/A **Other:**		**Installation Instructions** FL17236_R10_II_ESR-3448 Oct 2024.pdf Verified By: ICC Evaluation Service, LLC Created by Independent Third Party: **Evaluation Reports** FL17236_R10_AE_ESR-3448 Oct 2024.pdf
17236.13	SBP4, SBP6	SBP Supplementary Bearing Plate
Limits of Use **Approved for use in HVHZ:** Yes **Approved for use outside HVHZ:** Yes **Impact Resistant:** N/A **Design Pressure:** N/A **Other:**		**Installation Instructions** FL17236_R10_II_ESR-3448 Oct 2024.pdf Verified By: ICC Evaluation Service, LLC Created by Independent Third Party: **Evaluation Reports** FL17236_R10_AE_ESR-3448 Oct 2024.pdf
17236.14	STC24, STC26, STC28	STC Scissor Truss Clip
Limits of Use **Approved for use in HVHZ:** No **Approved for use outside HVHZ:** Yes **Impact Resistant:** N/A **Design Pressure:** N/A **Other:**		**Installation Instructions** FL17236_R10_II_ESR-3448 Oct 2024.pdf Verified By: ICC Evaluation Service, LLC Created by Independent Third Party: **Evaluation Reports** FL17236_R10_AE_ESR-3448 Oct 2024.pdf
17236.15	TSP	TSP Stud Plate Tie
Limits of Use **Approved for use in HVHZ:** Yes **Approved for use outside HVHZ:** Yes **Impact Resistant:** N/A **Design Pressure:** N/A **Other:**		**Installation Instructions** FL17236_R10_II_ESR-3448 Oct 2024.pdf Verified By: ICC Evaluation Service, LLC Created by Independent Third Party: **Evaluation Reports** FL17236_R10_AE_ESR-3448 Oct 2024.pdf

ICC-ES Evaluation Report

ESR-3448

Reissued October 2024

Subject to renewal October 2026

This report also contains:

- City of LA Supplement
- FL Supplement w/ HVHZ

ICC-ES Evaluation Reports are not to be construed as representing aesthetics or any other attributes not specifically addressed, nor are they to be construed as an endorsement of the subject of the report or a recommendation for its use. There is no warranty by ICC Evaluation Service, LLC, express or implied, as to any finding or other matter in this report, or as to any product covered by the report.

Copyright © 2024 ICC Evaluation Service, LLC. All rights reserved.

DIVISION: 06 00 00—WOOD, PLASTICS AND COMPOSITES **Section: 06 05 23—Wood, Plastic, and Composite Fastenings**	**REPORT HOLDER:** **MITEK® INC.** **ADDITIONAL LISTEE:** **THE HOME DEPOT**	**EVALUATION SUBJECT:** **MITEK TRUSS CONNECTORS FOR WOOD-FRAMED CONSTRUCTION**	

1.0 EVALUATION SCOPE

Compliance with the following codes:

- 2024, 2021, 2018, 2015 and 2012 *International Building Code®* (IBC)
- 2024, 2021, 2018, 2015 and 2012 *International Residential Code®* (IRC)

Property evaluated:

Structural

2.0 USES

The MiTek structural connectors described in this report (see Table 14 for a complete listing) are used to connect wood framing members in accordance with Section 2304.10.4 of the 2024 and 2021 IBC (Section 2304.10.3 of the 2018 and 2015 IBC and Section 2304.9.3 of the 2012 IBC). The connectors may also be used in structures regulated under the IRC when an engineered design is submitted to, and approved by, the code official, in accordance with Section R301.1.3 of the IRC.

3.0 DESCRIPTION

3.1 BN Breakfast Nook Hanger:

The BN Breakfast Nook Hanger is designed to connect four sets of mono-trusses or other wood-framing members in the traditional "breakfast nook" configuration. The hanger is cold-formed from No. 14 gage steel, and is prepunched for installation with 10d common nails into the header and 10d by $1^1/_2$-inch-long nails into the joist. The hanger joints are factory-welded with $^1/_8$-inch (3.2 mm) fillet welds. See Table 1 and Figure 1 for product dimensions, fastener schedule, allowable loads, and typical installation details.

3.2 LDSC4 and DSC4 Drag Strut Connectors:

The LDSC4 and DSC4 Drag Strut Connectors are designed to tie wooden truss chord members to the top plates in a wall system. The connectors are fabricated from No. 14 gage or No. 3 gage hot-rolled steel. The DSC4 is prepunched with holes for installation with MiTek Pro Series WS3 wood screws, which are provided with the device. The LDSC4 Drag Strut is prepunched for installation with 10d by $1^1/_2$-inch-long nails. See Table 2 and Figure 2 for product dimensions, fastener schedule, allowable loads, and a typical installation detail.

3.3 FTC Floor Truss Clip:

The FTC Floor Truss Clip is designed to transfer vertical loads between two floor trusses having single-ply chords or double-ply chords to allow the two trusses to act as a single floor girder truss. The clip is cold-formed from 18 gage steel, and is prepunched for 10d common or 10d by $1^1/_2$-inch-long nails. See Table 3 and Figure 3 for product dimensions, fastener schedule, allowable loads, and typical installation details.

3.4 GT Girder Truss Hanger:

The GT girder truss hanger is designed to hang girder trusses off of other girder trusses or other wood supporting members. The U-shaped portion of the hanger is fabricated from No. 7 gage hot-rolled steel plate, and is factory welded to the back plate, which is fabricated from No. 3 gage hot-rolled steel plate. The U-shaped portion of the hanger is prepunched for installation with 16d common nails, and the back plate of the hanger is provided with holes allowing the installation of either $^3/_4$-inch- or 1-inch-diameter (19.1 or 25.4 mm) bolts. See Tables 4A and 4B for product dimensions and required fasteners, Table 4B for allowable loads, and Figure 4 for a typical installation detail.

3.5 HCPRS Hurricane/Seismic Anchor:

The HCPRS Hurricane/Seismic Anchor is designed to tie trusses and rafters to top plates for the purpose of resisting uplift, lateral and transverse loads. The anchor is cold-formed from No. 18 gage steel, and is prepunched for installation with 8d common or 8d by $1^1/_2$-inch-long nails. See Table 5 and Figure 5 for product dimensions, fastener schedule, allowable loads, and a typical installation detail.

3.6 HGA10 Hurricane Gusset Angle:

The HGA10 Hurricane Gusset Angle is a connector designed to connect trusses, joists, or rafters to top plates. The connector is cold-formed from No. 14 gage steel, and is prepunched for installation with MiTek Pro Series WS3 or WS15 wood screws, which are supplied with the device. See Table 6 and Figure 6 for product dimensions, fastener schedule, allowable loads, and typical installation details.

3.7 HHCP Hurricane/Seismic Anchor:

The HHCP Hurricane/Seismic Anchors are designed to connect hip rafters or trusses to wall top plates, such that the rafter or truss bisects the 90-degree angle between the two intersecting wall planes. The HHCP2 anchor is cold-formed from No. 18 gage steel, and is prepunched for installation with 10d by $1^1/_2$-inch-long nails. The HHCP4 anchor is cold-formed from No. 16 gage steel and is prepunched for installation with 10d common nails. See Table 7 and Figure 7 for product dimensions, fastener schedule, allowable loads, and a typical installation detail.

3.8 HJC Hip/Jack Connectors:

The HJC Hip/Jack Connectors are designed to support single-ply hip and jack trusses from double-ply girder trusses. The hip truss is installed at 45 degrees with respect to the jack truss. The HJC series connectors are cold-formed from No. 12 gage steel, and are prepunched for installation with 16d common nails to be installed into the supporting truss or girder bottom chord and 10d common nails for nailing into the hip and jack members. See Table 8 and Figure 8 for product dimensions, fastener schedule, allowable loads, and typical installation details.

3.9 RT Hurricane Tie:

The RT Hurricane Ties are designed to connect roof rafters and trusses to their supporting construction. All RT series connectors, except the RT10 and the RT20, connect roof rafters or trusses to the top plate. The RT10 and RT20 connect the rafter or truss to both the top plate and the vertical wall stud below. RT connectors are fabricated from No. 18 or No. 16 gage steel, and are prepunched for installation with 8d common, 8d by $1^1/_2$-inch-long, 10d common or 10d by $1^1/_2$-inch-long nails. See Table 9 and Figure 9 for product dimensions, fastener schedule, allowable loads, and typical installation details.

3.10 SBP Supplementary Bearing Plate:

The SBP supplementary bearing plate is used to connect rafters and trusses to the top plate, to resist uplift loads, as well as in-plane horizontal loads parallel and perpendicular to the top plate. The SBP supplementary bearing plate is provided as a two-piece installation (one on each side of the member being supported). The SBP plate is cold-formed from No. 16 gage steel, and is prepunched for installation with 10d common nails into the plate and either 10d common nails or 10d by $1^1/_2$-inch-long nails into the truss. See Table 10 and Figure 10 for product dimensions, fastener schedules, allowable loads, and a typical installation detail.

3.11 STC Scissor Truss Clip:

The STC Scissor Truss Clip is designed to connect a single-ply scissor truss to nominally 2-by-4, 2-by-6 or 2-by-8 wall top plates. The connector is cold-formed from No. 12 gage steel, and has prepunched horizontal nail slots for horizontal adjustment of the scissor truss, and prepunched flanges for installation with 10d by

$1^1/_2$-inch-long nails into wall top plates. See Table 11 and Figure 11 for product dimensions, fastener schedule, allowable loads, and a typical installation detail.

3.12 TSP Stud Plate Tie:

The TSP Stud Plate Tie is designed to connect a single or double top plate or sill plate to a wall stud, and can also be used for connecting a roof rafter or truss to the top plate of a supporting wall. Optional diamond nail holes allow for various uplift capacities for single or double plate installation conditions. Single top plate or sill plate applications require the installation of the specified nails into all round holes of the connector. Double top plate to stud connections and truss/rafter to double top plate connections (rafter tie application) require the installation of the specified nails into all round and all diamond holes of the connector to support the increased loads. TSP connectors are fabricated from No. 16 gage steel and are prepunched for installation with 10d by $1^1/_2$-inch-long or 10d common nails. See Tables 12A, 12B and Figure 12 for product dimensions, fastener schedules, allowable loads, and typical installation details.

3.13 Materials:

3.13.1 Steel: The specific types of steel and corrosion protection for each product are described in Table 13 of this evaluation report. Minimum base-steel thicknesses for the different gages are shown in the following table:

GAGE NO.	MINIMUM BASE-STEEL THICKNESS (inch)
18	0.044
16	0.055
14	0.070
12	0.099
7	0.171
3	0.240

For **SI:** 1 inch = 25.4 mm.

3.13.2 Wood: Wood members must be sawn lumber or structural glued laminated timber (glulam) with a minimum specific gravity of 0.50, or approved structural composite lumber (SCL) with a minimum equivalent specific gravity of 0.50, unless otherwise noted in the applicable table within this report. Wood members must have a moisture content not exceeding 19 percent (16 percent for glulam and SCL), except as noted in Section 4.1. For connectors installed with nails in compliance with Section 3.13.3.2, or MiTek Pro Series WS wood screws, in compliance with Section 3.13.3.3, the thickness of each wood member must be sufficient such that the specified fasteners do not protrude through the opposite side of the member, unless otherwise permitted in the applicable table within this report. Refer to Section 3.13.4 for issues related to treated wood.

3.13.3 Fasteners: Required fastener types and sizes for use with the MiTek connectors described in this evaluation report are specified in Sections 3.13.3.1 through 3.13.3.3 and in Tables 1 through 12.

3.13.3.1 Bolts: At a minimum, bolts must comply with ASTM A36 or ASTM A307, and must have a minimum bending yield strength of 45,000 psi (310 MPa). Bolt diameters must be as specified in the applicable tables of this evaluation report.

3.13.3.2 Nails: Nails used for connectors described in this report must be bright or hot-dipped galvanized carbon steel nails complying with material requirements, physical properties, tolerances, workmanship, protective coating and finishes, and packaging and package marking requirements specified in ASTM F1667; and must have lengths, diameters and bending yield strengths, F_{yb}, as shown in the following table:

FASTENER DESIGNATION	FASTENER LENGTH (inches)	SHANK DIAMETER (inch)	MINIMUM REQUIRED F_{yb} (psi)
8d - $1^1/_2$	1.5	0.131	100,000
8d common	2.5	0.131	100,000
10d common	3.0	0.148	90,000
10d - $1^1/_2$	1.5	0.148	90,000
16d common	3.5	0.162	90,000

For **SI:** 1 inch = 25.4 mm, 1 psi = 6,895 Pa.

Alternatively, nails of other materials or finishes may be used when they are recognized in an ICC-ES evaluation report as having bending yield strength and withdrawal capacity equal to or better than those of a bright carbon steel of the same nominal diameter.

3.13.3.3 MiTek Pro Series Wood Screws: The WS wood screws used with the HGA and DSC connectors must be MiTek Pro Series WS3 and WS15 wood screws, as described in ESR-2761. The appropriate size of WS series wood screw must be used, as indicated in the applicable tables of this evaluation report.

3.13.4 Use in Treated Wood: Connectors used in contact with preservative-treated or fire-retardant-treated wood must comply with Section 2304.10.6 of the 2024 and 2021 IBC (Section 2304.10.5 of the 2018 and 2015 IBC and Section 2304.9.5 of the 2012 IBC) and Section R304.3 of the 2024 IRC (Section R317.3 of the 2021, 2018, 2015 and 2012 IRC. The lumber treater or the holder of this report (MiTek USA, Inc.), or both, should be contacted for recommendations on the appropriate level of corrosion resistance for the connectors and fasteners as well as the connection capacities of the fasteners used with the specific proprietary preservative-treated or fire-retardant-treated lumber. Nails must be hot-dipped galvanized carbon steel nails. Alternatively, nails of other materials and finishes may be used when they are recognized in an ICC-ES evaluation report for use in the applicable treated lumber and have equivalent or greater capacities as those required in this report.

4.0 DESIGN AND INSTALLATION

4.1 Design:

The allowable loads given in Tables 1 through 12 are based on allowable stress design. The use of the allowable loads for the products listed in Table 13 must comply with all applicable requirements and conditions specified in this evaluation report. The tabulated allowable loads are for normal load duration and/or short load duration, based on load duration factors, C_D, in accordance with Section 11.3.2 of the 2024, 2018 and 2015 *National Design* Specification® *for Wood Construction* (NDS), as indicated in Tables 1 through 12 of this evaluation report (Section 10.3.2 of the 2012 NDS for the 2012 IBC and IRC). No further increases are permitted for load durations other than those specified. The tabulated allowable loads are for connections in wood used under continuously dry conditions where the maximum moisture content in wood is 19 percent (16 percent for SCL) or less, and sustained temperatures are limited to 100°F (37.8°C) or less. When connectors are installed in wood having a moisture content greater than 19 percent (16 percent for SCL), or where the in-service moisture content in wood is expected to exceed this value, the applicable wet service factor, C_M, for dowel-type fasteners must be applied, unless otherwise noted in the tables of this report. When connectors are installed in wood that will experience sustained exposure to temperatures exceeding 100°F (37.8°C), the allowable loads in this evaluation report must be adjusted by the temperature factor, C_t, specified in the NDS. The group action factor, C_g, in the NDS, has been accounted for, in the tabulated allowable loads, where applicable. For connectors installed with bolts, minimum edge distances and end distances within the wood members must be met, such that the geometry factor, C_Δ, is 1.0, in accordance with 2024, 2018 and 2015 NDS Section 12.5.1 (2012 NDS Section 11.5.1 for the 2012 IBC and IRC). Connected wood members must be checked for load-carrying capacity at the connection in accordance with 2024, 2018 and 2015 NDS Section 11.1.2 (2012 NDS Section 10.1.2 for the 2012 IBC and IRC).

4.2 Installation:

Installation of the MiTek connectors must be in accordance with this evaluation report and the manufacturer's published installation instructions. Bolts must be installed in accordance with 2024, 2018 and 2015 NDS Section 12.1.3 (2012 NDS Section 11.1.3 for the 2012 IBC and IRC. MiTek Pro Series wood screws must be installed in accordance with ESR-2761.

4.3 Special Inspection:

4.3.1 Main Wind-Force-Resisting System under the IBC: Periodic special inspection must be conducted for components within the main wind-force-resisting system, where required in accordance with Sections 1704.2 and 1705.12 of the 2024 and 2021 IBC (Sections 1704.2 and 1705.11 of the 2018 and 2015 IBC, or Sections 1704.2 and 1705.10 of the 2012 IBC) as applicable.

4.3.2 Seismic-Force-Resisting System under the IBC: Periodic special inspection must be conducted for components within the seismic-force-resisting system, where required, in accordance with Sections 1704.2 and 1705.13 of the 2024 and 2021 IBC (Sections 1704.2 and 1705.12 of the 2018 and 2015 IBC, or Sections 1704.2 and 1705.11 of the 2012 IBC) as applicable.

4.3.3 Installation under the IRC: Special inspections are normally not required for connectors used in structures regulated under the IRC. However, for components and systems requiring an engineered design in accordance with IRC Section R301, periodic special inspection requirements and exemptions must be in accordance with Sections 4.3.1 and 4.3.2 of this report.

5.0 CONDITIONS OF USE:

The MiTek connectors described in this report comply with, or are suitable alternatives to what is specified in, those codes listed in Section 1.0 of this report, subject to the following conditions:

5.1 The connectors must be manufactured, identified, designed, and installed in accordance with this report and the manufacturer's published installation instructions. A copy of the manufacturer's published installation instructions must be available at the jobsite at all times during installation. In the event of a conflict between this report and the manufacturer's published installation instructions, this report governs.

5.2 Calculations showing compliance with this report must be submitted to the code official. The calculations must be prepared by a registered design professional where required by the statutes of the jurisdiction in which the project is to be constructed.

5.3 Connected wood members and fasteners must comply with Sections 3.13.2 and 3.13.3, respectively.

5.4 Adjustment factors, noted in Section 4.1 of this report and the applicable codes, must be considered where applicable.

5.5 Use of connectors and fasteners with preservative-treated or fire-retardant-treated lumber must be in accordance with Section 3.13.4.

5.6 Factory-welded connectors identified in Table 14 are manufactured at the designated facilities under an approved quality control program with inspections by ICC-ES.

6.0 EVIDENCE SUBMITTED

Data in accordance with the ICC-ES Acceptance Criteria for Joist Hangers and Similar Devices (AC13), dated October 2018 (editorially revised February 2024).

7.0 IDENTIFICATION

7.1 The connectors described in this report are identified by the product model (stock) number, the number of the ICC-ES index evaluation report for MiTek (ESR-2685), and by one or more of the following designations: MiTek, USP, or Structural Connectors.

7.2 The report holder's contact information is the following:

MITEK® INC.
16023 SWINGLEY RIDGE ROAD
CHESTERFIELD, MISSOURI 63017
(800) 328-5934
www.mitek-us.com
uspcustomerservice@mii.com

7.3 The Additional Listee's contact information is the following:

THE HOME DEPOT
2455 PACES FERRY ROAD SE
ATLANTA, GEORGIA 30339
(678) 216-8204
www.homedepot.com

TABLE 8—HJC HIP/JACK CONNECTOR ALLOWABLE LOADS[1,2,3]

STOCK NO.	STEEL GAGE	DIMENSIONS (in.)			FASTENER SCHEDULE					ALLOWABLE LOADS (lbs)			
		W	H	D	Carrying Truss		Carried Trusses			Download [4]			Uplift [5]
					Qty.	Type	Qty.		Type				
							Jack	Hip		C_D=1.0	C_D=1.15	C_D=1.25	C_D=1.6
HJC26	12	6	$5^3/_8$	$3^1/_4$	16	16d common	7	5	10d common	2,750	3,055	3,265	2,345
HJC28	12	6	$7^1/_8$	$3^1/_4$	20	16d common	8	6	10d common	3,385	3,385	3,385	2,345

For **SI:** 1 inch = 25.4 mm, 1 lb = 4.45 N, 1 psi = 6,895 Pa.

[1]Allowable loads have been adjusted for load duration factors, C_D, as shown, in accordance with the NDS. The allowable loads do not apply to loads of other durations, and are not permitted to be adjusted for other load durations. See Sections 4.1 and 4.2 for additional design and installation requirements.
[2]Allowable loads are for installations in wood members complying with Section 3.13.2. Wood members must also have a minimum reference compression perpendicular to grain design value, $F_{c\text{-}perp}$, of 625 psi (4.31 MPa).
[3]See Section 3.13.3 for required fastener dimensions and mechanical properties.
[4]Allowable downloads are the total allowable download for the hip and jack trusses combined, and assume that 75% of the total load is distributed to the hip truss and 25% is distributed to the jack truss.
[5]Allowable uplift loads on the HJC26 and HJC28 are the total allowable uplift loads for the hip and jack trusses combined, and assume that 75% of the total load is distributed to the hip truss and 25% is distributed to the jack truss.

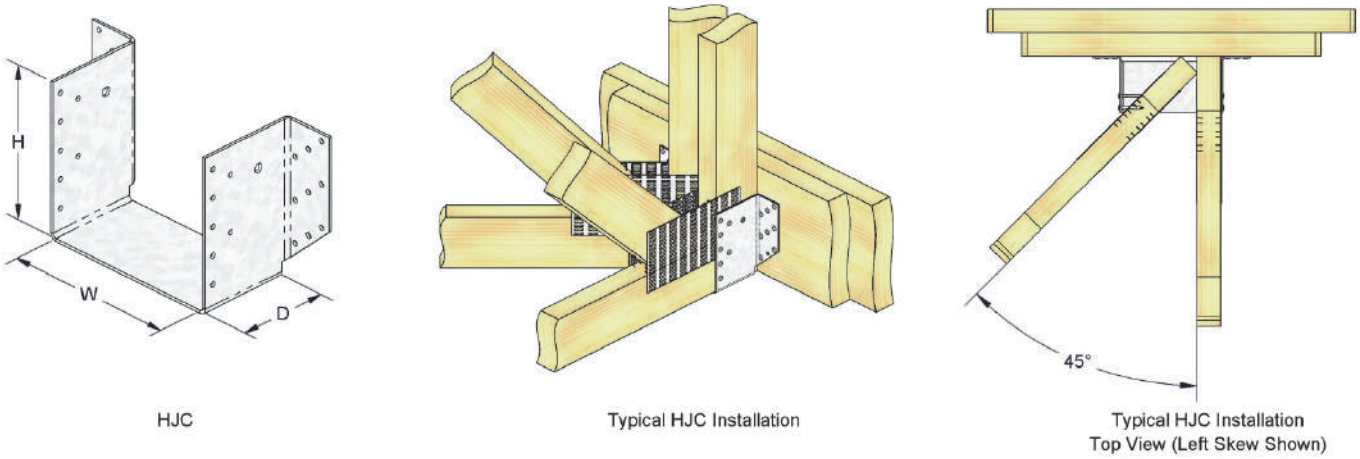

FIGURE 8—HJC AND HTHJ HIP JACK CONNECTOR

DIVISION: 06 00 00—WOOD, PLASTICS AND COMPOSITES
Section: 06 05 23—Wood, Plastic, and Composite Fastenings

REPORT HOLDER:

MITEK® INC.

EVALUATION SUBJECT:

MITEK TRUSS CONNECTORS FOR WOOD-FRAMED CONSTRUCTION

1.0 REPORT PURPOSE AND SCOPE

Purpose:

The purpose of this evaluation report supplement is to indicate that MiTek truss connectors for wood-framed construction, described in ICC-ES evaluation report ESR-3448, have also been evaluated for compliance with the codes noted below as adopted by the Los Angeles Department of Building and Safety (LADBS).

Applicable code editions:

- 2023 *City of Los Angeles Building Code* (LABC)
- 2023 *City of Los Angeles Residential Code* (LARC)

2.0 CONCLUSIONS

The MiTek truss connectors for wood-framed construction, described in Sections 2.0 through 7.0 of the evaluation report ESR-3448, comply with the LABC Chapter 23, and the LARC, and are subjected to the conditions of use described in this supplement.

3.0 CONDITIONS OF USE

MiTek truss connectors for wood-framed construction, described in this evaluation report supplement must comply with all of the following conditions:

- All applicable sections in the evaluation report ESR-3448.
- The design, installation, conditions of use and identification are in accordance with the 2021 *International Building Code®* (IBC) provisions noted in the evaluation report ESR-3448.
- The design, installation and inspection are in accordance with additional requirements of LABC Chapters 16 and 17, as applicable.
- Allowable loads in tables are for the wood fastening devices and their fasteners. The connected member shall be checked for capacity (which may govern).
- The supported end of joist or beam must be within $^{1}/_{4}$-inch from the supporting member.
- Solid blocking must be required for all joist hangers supporting roof joists having one end twisted more than one-half degree per foot of length relative to the other end, except as specifically noted in the evaluation report ESR-3448.
- Under the LARC, an engineered design in accordance with LARC Section R301.1.3 must be submitted.

This supplement expires concurrently with the evaluation report ESR-3448, reissued October 2024.

ICC-ES Evaluation Reports are not to be construed as representing aesthetics or any other attributes not specifically addressed, nor are they to be construed as an endorsement of the subject of the report or a recommendation for its use. There is no warranty by ICC Evaluation Service, LLC, express or implied, as to any finding or other matter in this report, or as to any product covered by the report.

Copyright © 2024 ICC Evaluation Service, LLC. All rights reserved.

DIVISION: 06 00 00—WOOD, PLASTICS AND COMPOSITES
Section: 06 05 23—Wood, Plastic, and Composite Fastenings

REPORT HOLDER:

MITEK® INC.

EVALUATION SUBJECT:

MITEK TRUSS CONNECTORS FOR WOOD-FRAMED CONSTRUCTION

1.0 REPORT PURPOSE AND SCOPE

Purpose:

The purpose of this evaluation report supplement is to indicate that the MiTek Truss Connectors for Wood-Framed Construction, described in ICC-ES evaluation report ESR-3448, have also been evaluated for compliance with the codes noted below.

Applicable code editions:

- 2023 and 2020 *Florida Building Code—Building*
- 2023 and 2020 *Florida Building Code—Residential*

2.0 CONCLUSIONS

The MiTek Truss Connectors for Wood-Framed Construction, described in Sections 2.0 through 7.0 of the evaluation report ESR-3448, comply with the *Florida Building Code—Building*, and the *Florida Building Code—Residential.* The design requirements shall be determined in accordance with the *Florida Building Code—Building* or the *Florida Building Code—Residential*, as applicable. The installation requirements noted in ICC-ES evaluation report ESR-3448 for the 2021 and 2018 *International Building Code®* meet the requirements of the *Florida Building Code—Building* or the *Florida Building Code—Residential*, as applicable.

Use of the MiTek truss connectors for wood-framed construction has also been found to be in compliance with the High-Velocity Hurricane Zone provisions of the *Florida Building Code—Building*, and the *Florida Building Code—Residential* with the following condition:

a) For connections subject to uplift, the connection must be designed for no less than 700 pounds (3114 N).

For products falling under Florida Rule 61G20-3, verification that the report holder's quality assurance program is audited by a quality assurance entity approved by the Florida Building Commission for the type of inspections being conducted is the responsibility of an approved validation entity (or the code official when the report holder does not possess an approval by the Commission).

This supplement expires concurrently with the evaluation report, reissued October 2024.

ICC-ES Evaluation Reports are not to be construed as representing aesthetics or any other attributes not specifically addressed, nor are they to be construed as an endorsement of the subject of the report or a recommendation for its use. There is no warranty by ICC Evaluation Service, LLC, express or implied, as to any finding or other matter in this report, or as to any product covered by the report.

Copyright © 2024 ICC Evaluation Service, LLC. All rights reserved.

MIAMI-DADE COUNTY
PRODUCT CONTROL SECTION
11805 SW 26 Street, Room 208
Miami, Florida 33175-2474
T (786) 315-2590 F (786) 315-2599
www.miamidade.gov/economy

DEPARTMENT OF REGULATORY AND ECONOMIC RESOURCES (RER)
BOARD AND CODE ADMINISTRATION DIVISION

NOTICE OF ACCEPTANCE (NOA)

Nu-Vue Industries, Inc.
1055 East 29th Street
Hialeah, Florida 33013

SCOPE: This NOA is being issued under the applicable rules and regulations governing the use of construction materials. The documentation submitted has been reviewed and accepted by Miami-Dade County RER-Product Control Section to be used in Miami Dade County and other areas where allowed by the Authority Having Jurisdiction (AHJ).

This NOA shall not be valid after the expiration date stated below. The Miami-Dade County Product Control Section (In Miami Dade County) and/or the AHJ (in areas other than Miami Dade County) reserve the right to have this product or material tested for quality assurance purposes. If this product or material fails to perform in the accepted manner, the manufacturer will incur the expense of such testing and the AHJ may immediately revoke, modify, or suspend the use of such product or material within their jurisdiction. RER reserves the right to revoke this acceptance if it is determined by Miami-Dade County Product Control Section that this product or material fails to meet the requirements of the applicable building code.

This product is approved as described herein and has been designed to comply with the Florida Building Code, including the High Velocity Hurricane Zone.

DESCRIPTION: Series NVSNP, NV/NVTH, NVTHS, NVHC, NVSTA and NVHTA Steel Wood Connectors

APPROVAL DOCUMENT: Drawing No. **JA-1958.1-22**, titled "NOA No. 20-0526.05 Revision", sheets 1 through 5 of 5, dated 01/18/2023, prepared by Javad Ahmad PE, Inc., signed and sealed by Javad Ahmad, P.E. on 04/11/2023, bearing the Miami-Dade County Product Control revision stamp with the Notice of Acceptance number and expiration date by the Miami-Dade County Product Control Section.

MISSILE IMPACT RATING: None

LABELING: A permanent mark with the manufacturer's name, acronym or logo is to be located on each unit. A permanent label with the manufacturer's name or logo, city, state, model/series, and the statement reading 'Miami-Dade County Product Control Approved' is to be located on each packaging carton.

RENEWAL of this NOA shall be considered after a renewal application has been filed and there has been no change in the applicable building code negatively affecting the performance of this product.

TERMINATION of this NOA will occur after the expiration date or if there has been a revision or change in the materials, use, and/or manufacture of the product or process. Misuse of this NOA as an endorsement of any product, for sales, advertising or any other purposes shall automatically terminate this NOA. Failure to comply with any section of this NOA shall be cause for termination and removal of NOA.

ADVERTISEMENT: The NOA number preceded by the words Miami-Dade County, Florida, and followed by the expiration date may be displayed in advertising literature. If any portion of the NOA is displayed, then it shall be done in its entirety.

INSPECTION: A copy of this entire NOA shall be provided to the user by the manufacturer or its distributors and shall be available for inspection at the job site at the request of the Building Official.

This NOA **revises NOA # 20-0526.05** and consists of this page 1 and evidence pages E-1, E-2, E-3 and E-4, as well as approval document mentioned above.

The submitted documentation was reviewed by **Ca** **P.E.**

MIAMI-DADE COUNTY APPROVED

NOA No. 23-0210.01
Expiration Date: July 30, 2025
Approval Date: May 11, 2023

NOTICE OF ACCEPTANCE: EVIDENCE SUBMITTED

1. EVIDENCE SUBMITTED UNDER PREVIOUS NOAs

A. DRAWINGS *"Submitted under NOA #15-0507.03"*

1. Drawing No. **NU-5**, titled "Skewed Nail Plate, NV358 & NV458 with Double NVTH Straps, NVTH/NVTHS Anchors & NVHC Hurricane Clips and NVSTA & NVHTA Heavy Duty Anchors with Seat", sheets 1 through 4 of 4, dated 04/15/2015, prepared by Nu-Vue Industries, Inc., signed and sealed by Vipin N. Tolat, P.E.

B. TESTS *"Submitted under NOA # 04-0510.03"*

Test reports on wood connectors per ASTM D1761 by Product Testing, Inc., signed and sealed by C. R. Caudel, P.E.

	Report No.	Wood Connector	Direction	Date
1.	PT # 03-4482	NVSNP3	Downward	09/15/03
2.	PT # 03-4625	NVHCL/R	Up& Sideways	01/21/04
3.	PT # 04-4641	NVSTA-24H	Up& Sideways	03/17/04
4.	PT # 04-4698	NVTH24	Up& Sideways	04/15/04
5.	PT # 03-4590	NVTH26/NV458	Sideways	12/31/03
6.	PT # 04-4642	NVHTA-24H	Up& Sideways	03/22/04
7.	PT # 03-4543	NVTH20/NV358	Up& Sideways	12/19/03

C. CALCULATIONS *"Submitted under NOA # 09-0721.05"*

1. Report of Design Capacities, dated 06/30/2009, sheets 1 through 12 of 12, prepared, signed and sealed by Vipin N. Tolat, P.E.

"Submitted under NOA # 04-0510.03"

2. Report of Design Capacities dated 04/27/2004, sheet 1 through 12, prepared, signed and sealed by Vipin N. Tolat, P.E.

D. QUALITY ASSURANCE

1. Miami-Dade Department of Regulatory and Economic Resources (RER)

E. MATERIAL CERTIFICATIONS

1. None.

F. STATEMENT *"Submitted under NOA #15-0507.03"*

1. Statement letter of code conformance to 2010 and 5th (2014) edition of the FBC, issued by Vipin N. Tolat, P.E., dated 04/29/2015, signed and sealed by Vipin N. Tolat, P.E.

"Submitted under NOA # 09-0721.05"

2. Statement letter of code conformance, no financial interest and no change of product, issued, signed and sealed by Vipin N. Tolat, P.E.

Car
Product
N
Expiration Date: July 30, 2023
Approval Date: May 11, 2023

NOTICE OF ACCEPTANCE: EVIDENCE SUBMITTED

2. EVIDENCE SUBMITTED UNDER NOA # 17-0802.07

A. DRAWINGS

1. Drawing No. **NU-5**, titled "Skewed Nail Plate, NV358 & NV458 with Double NVTH Straps, NVTH/NVTHS Anchors & NVHC Hurricane Clips and NVSTA & NVHTA Heavy Duty Anchors with Seat", sheets 1 through 4 of 4, dated 07/17/2017, prepared by Nu-Vue Industries, Inc., signed and sealed by Vipin N. Tolat, P.E.

B. TESTS

1. None.

C. CALCULATIONS

1. None.

D. QUALITY ASSURANCE

1. Miami-Dade Department of Regulatory and Economic Resources (RER)

E. MATERIAL CERTIFICATIONS

1. None.

F. STATEMENT

1. Statement letter of code conformance to the 5th Edition (2014) and 6th Edition (2017) FBC, issued by Vipin N. Tolat, P.E., dated 07/25/2017, signed and sealed by Vipin N. Tolat, P.E.

Pro

Expira

Approval Date: May 11, 2023

NOTICE OF ACCEPTANCE: EVIDENCE SUBMITTED

3. EVIDENCE SUBMITTED UNDER NOA # 20-0526.05

A. DRAWINGS

1. Drawing No. **NU-5**, titled "Skewed Nail Plate, NV358 & NV458 with Double NVTH Straps, NVTH/NVTHS Anchors & NVHC Hurricane Clips and NVSTA & NVHTA Heavy Duty Anchors with Seat", sheets 1 through 4 of 4, dated 06/25/2020, prepared by Nu-Vue Industries, Inc., signed and sealed by Vipin N. Tolat, P.E.

B. TESTS

1. Verification calculations for compliance with the ASTM D7147-05 and ASTM D7147-11, prepared by Vipin N. Tolat, P.E. dated 05/18/2020, signed and sealed by Vipin N. Tolat, P.E.

C. CALCULATIONS

1. None.

D. QUALITY ASSURANCE

1. Miami-Dade Department of Regulatory and Economic Resources (RER)

E. MATERIAL CERTIFICATIONS

1. None.

F. STATEMENT

1. Statement letter of code conformance to the 6th Edition (2017) and the 7th Edition (2020) FBC and of no financial interest, issued by Vipin N. Tolat, P.E., dated 06/25/2020, signed and sealed by Vipin N. Tolat, P.E.

Pr

Expira
Appr

NOTICE OF ACCEPTANCE: EVIDENCE SUBMITTED

4. NEW EVIDENCE SUBMITTED

A. DRAWINGS

1. Drawing No. **JA-1958.1-22**, titled "NOA No. 20-0526.05 Revision", sheets 1 through 5 of 5, dated 01/18/2023, prepared by Javad Ahmad PE, Inc., signed and sealed by Javad Ahmad, P.E. on 04/11/2023.

B. TESTS

1. None.

C. CALCULATIONS

1. Allowable loads calculations, prepared by Javad Ahmad PE, Inc., dated 04/11/2023, signed and sealed by Javad Ahmad, P.E.

D. QUALITY ASSURANCE

1. Miami-Dade Department of Regulatory and Economic Resources (RER).

E. MATERIAL CERTIFICATIONS

1. None.

F. STATEMENT

1. Statement letter of code conformance to the 7th Edition (2020) of the FBC and of no financial interest, issued by Javad Ahmad PE, Inc., dated 02/03/2023, signed and sealed by Javad Ahmad, P.E.

Pro

Expira
Appr

NU-VUE INDUSTRIES, INC.

1055 EAST 29TH HIALEAH, FL 33013, TEL. 305-694-0397

NVSNP 3 SKEWED NAIL PLATE

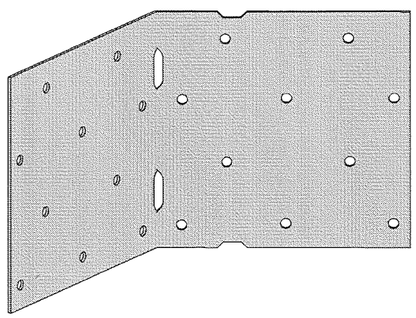

NV358 & NV458 18G SEATS WITH 14G NVTH STRAPS

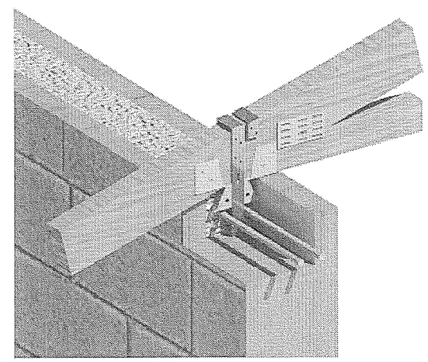

NVHCR / NVHCL

HURRICANE CLIPS

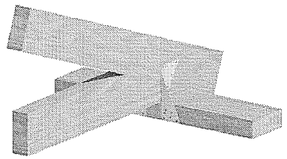

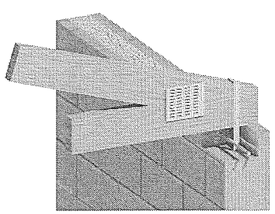

NVTH / NVTHS

TRUSS ANCHORS AND
RIVETED TRUSS ANCHORS

NVSTA & NVHTA HEAVY DUTY ANCHORS WITH 14G DOUBLE NVTH STRAPS

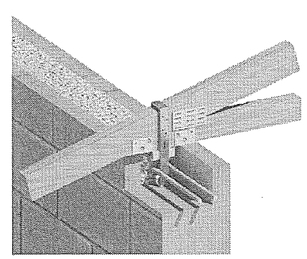

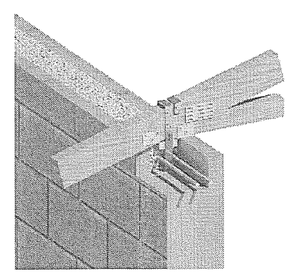

GENERAL NOTES:

1. ALLOWABLE LOADS AND ALL FASTENERS ARE BASED ON NATIONAL DESIGN SPECIFICATIONS (NDS) FOR WOOD CONSTRUCTION 2018.
2. DESIGN LOADS ARE BASED ON SOUTHERN YELLOW PINE WOOD SPECIES WITH A SPECIFIC GRAVITY OF 0.55. ALLOWABLE LOADS FOR OTHER SPECIES OR CONDITIONS MUST BE ADJUSTED ACCORDING TO NDS 2018.
3. THIS CATALOG REFLECTS DESIGN CHANGES AND DESIGN ADJUSTMENTS TO SOME NU-VUE PRODUCTS. THE TABLES AND NOTES IN THIS CATALOG SUPERCEDE ALL PREVIOUS DOCUMENTS. NU-VUE RESERVES THE RIGHT TO CHANGE DESIGN SPECIFICATIONS WITHOUT NOTICE AND IS NOT LIABLE FOR SUCH CHANGES.
4. DESIGN LOADS DO NOT INCLUDE 33% INCREASE FOR STEEL AND CONCRETE.
5. ALLOWABLE UPLIFT LOADS HAVE BEEN ADJUSTED FOR LOAD DURATION FACTOR CD OF 1.6. APPLICABLE TO WIND AND EARTHQUAKE LOAD PER NDS 2018.
6. DESIGN CONFORMS TO 2020 EDITION OF FLORIDA BUILDING CODE.
7. COMBINED LOAD OF UPLIFT, LI AND L2 SHALL SATISFY THE FOLLOWING EQUATION.

$$\frac{\text{ACTUAL UPLIFT}}{\text{ALLOWABLE UPLIFT}} + \frac{\text{ACTUAL L1}}{\text{ALLOWABLE L1}} + \frac{\text{ACTUAL L2}}{\text{ALLOWABLE L2}} <= 1.0$$

8. ALL TESTS HAVE BEEN CONDUCTED IN ACCORDANCE WITH ASTM D-1761.
9. THE DESIGN LOADS LISTED ARE BASED ON THE LEAST VALUE OF THE FOLLOWING:
   1. THE LOWEST ULTIMATE LOAD DIVIDED BY THREE.
   2. THE LOWEST LOAD PRODUCING 1/8 " DEFLECTION.
   3. CALCULATIONS BASED ON NDS,AISI AND OTHER APPLICABLE CODES.

REFERENCES:

1. AISC 360-16
2. AISI S100-16
3. FBC 2020
4. ACI 318-19

MATERIAL

1. *WOOD*
   WOOD MEMBERS MUST BE S.P. NO. 1, SPECIFIC GRAVITY 0.55 OR AN APPROVED MEMBER WITH AN EQUIVALENT GRADE. DESIGN LOADS FOR OTHER SPECIES SHALL BE ADJUSTED PER NDS 2018. WOOD MEMBERS SHALL HAVE A MOISTURE CONTENT NOT EXCEEDING 19 PERCENT (16 PERCENT FOR STRUCTURAL ENGINEERED LUMBER). WOOD MEMBERS MUST BE USED UNDER CONTINUOUSLY DRY CONDITIONS AND WHERE SUSTAINED TEMPERATURES ARE LIMITED TO 100° F.
2. *PRESERVATIVE AND FIRE RETARDANT WOOD*
   CONNECTORS OR FASTENERS USED IN CONTACT WITH PRESERVATIVE-TREATED AND FIRE-RETARDANT-TREATED WOOD SHALL BE IN ACCORDANCE WITH SECTION 2304.10.5.
3. *NAIL*
   NAILS SHALL MEET THE REQUIREMENTS IN TABLE AND THE REQUIREMENTS SPECIFIED IN ASTM F 1667.
4. *GFCMU MASONRY*
   MATERIAL AND QUALITY OF MASONRY CONSTRUCTION MUST COMPLY WITH THE APPLICABLE SECTIONS OF FBC 2020. MINIMUM CONCRETE OR GROUT COMPRESSIVE STRENGTH SHALL BE 1500 PSI. CONCRETE MASONRY SHALL COMPLY WITH ASTM C90
5. *CONCRETE*
   MINIMUM CONCRETE COMPRESSIVE STRENGTH SHALL BE 2500 PSI.
6. *STEEL*
   CONNECTOR STEEL SHALL CONFORM TO ASTM A653 SS GRADE 33, MIN, YIELD 33 KSI, MIN. TENSILE STRENGTH 45 KSI AND MIN. GALVANIZED COATING OF G 60 PER ASTM A653.

PRODUCT REVISED
as complying with the Florida Building Code
NOA-No. 23-0210.01
Expir e 07/30/2025
By __
Miam **oduct Control**

JAVAD AHMAD PE, inc
8800 NW 23rd St, Miami FL
33172
Ph: (305) 424-8001
support@ja-pe.com
CONSULTING • STRUCTURAL DESIGN • FACADES • BUILDING ENVELOPE • SYSTEM DESIGN • PRODUCT APPROVALS

CLIENT : NU-VUE INDUSTRIES, INC

PROJECT : NOA NO. 20-0526.05 REVISION

REVISION			
No.	DATE	BY	DESCRIPTION

Date:	18/01/2023
Scale:	AS INDICATED
Drawn by:	BVS
Chk by:	BS
DRAWING NO.	JA-1958.1-22

NVSNP3

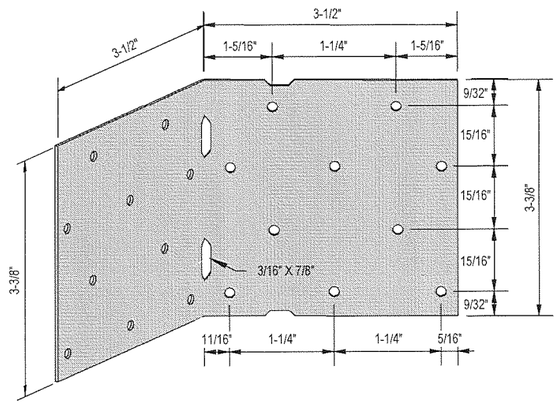

HOLES DIA. 3/16"

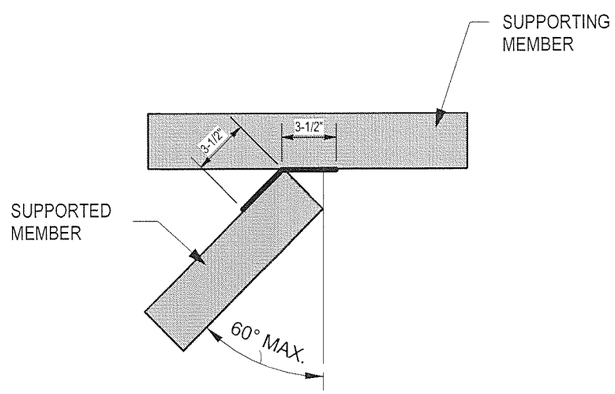

NVSNP3
INSTALLATION

TABLE 1
SKEWED NAIL PLATE

PRODUCT CODE	STEEL GAUGE	FASTENERS	ALLOWABLE LOADS (lbs.)	
		EACH END	GRAVITY	UPLIFT
NVSNP3	16	(6) 8d X 1-1/2"	570	570

NOTES:

1. SEE GENERAL NOTES, SHEET 1.
2. USE 6 NAIL HOLES IN EACH FLANGE.
3. DO NOT BEND NAIL PLATE MORE THAN ONCE.
4. SUPPORTING MEMBER SHALL BE IN THE ACUTE ANGLE SIDE WITH OTHER FLANGE BEHIND THE END OF SUPPORTED MEMBER (SEE SKETCH).

PRODUCT REVISED
as complying with the Florida Building Code
NOA-No. 23-0210.01
Expir e 07/30/2025
By Miam oduct Control

JAVAD AHMAD PE, inc
8800 NW 23rd St, Miami FL
33172
Ph: (305) 424-8001
support@ja-pe.com
CONSULTING • STRUCTURAL DESIGN • FACADES • BUILDING ENVELOPE • SYSTEM DESIGN • PRODUCT APPROVALS

CLIENT : NU-VUE INDUSTRIES, INC

PROJECT : NOA NO. 20-0526.05 REVISION

REVISION			
No.	DATE	BY	DESCRIPTION

Date: 18/01/2023
Scale: AS INDICATED
Drawn by: BVS
Checked by: BS
DRAWING NO. 1958.1-22

NV358 & NV458

TABLE 2
NV358 - 14G DOUBLE NVTH STRAPS WITH 2 PLY 18G SEAT

ASSEMBLY PRODUCT CODE	14G STRAP PRODUCT CODE	DIMENSION H (in.)	TOTAL NO. OF FASTENERS IN 2 STRAPS 10d X 3"	TOTAL NO. OF FASTENERS IN SEAT 10d X 3"	ALLOWABLE LOADS (lbs.)		
					UPLIFT	L1	L2
NV358-12	NVTH16	12	8	8	2245	1961	1839
NV358-14	NVTH18	14	10	8	2525	2206	2068
NV358-16	NVTH20	16	12	8	2806	2452	2298
NV358-20	NVTH24	20	14	8	3086	2697	2528
NV358-22	NVTH26	22	16	8	3367	2942	2758
NV358-24	NVTH28	24					
NV358-26	NVTH30	26					
NV358-32	NVTH36	32					
NV358-44	NVTH48	44					

TABLE 3
NV458 - 14G DOUBLE NVTH STRAPS WITH 3 PLY 18G SEAT

ASSEMBLY PRODUCT CODE	14G STRAP PRODUCT CODE	DIMENSION H (in.)	TOTAL NO. OF FASTENERS IN 2 STRAPS 10d X 3"	TOTAL NO. OF FASTENERS IN SEAT 10d X 3"	ALLOWABLE LOADS (lbs.)		
					UPLIFT	L1	L2
NV458-12	NVTH16	12	8	8	2245	2783	2078
NV458-14	NVTH18	14	10	8	2525	3131	2338
NV458-16	NVTH20	16	12	8	2806	3479	2597
NV458-20	NVTH24	20	14	8	3086	3827	2857
NV458-22	NVTH26	22	16	8	3367	4175	3117
NV458-24	NVTH28	24					
NV458-26	NVTH30	26					
NV458-32	NVTH36	32					
NV458-44	NVTH48	44					

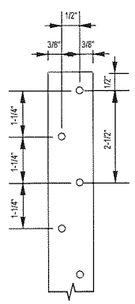

14G NVTH

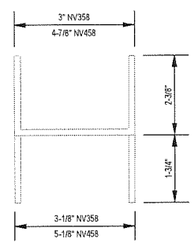

SIDE VIEW

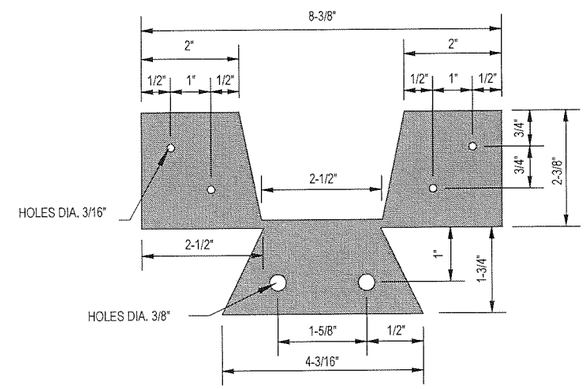

NV358 & NV458
18G SEAT DETAIL

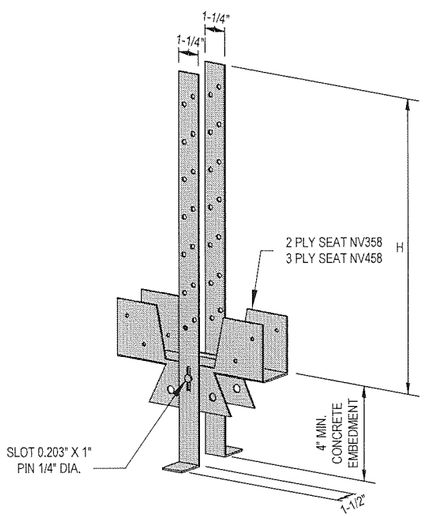

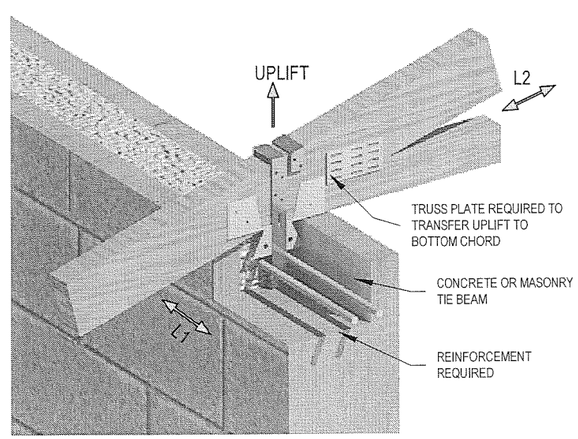

NOTES:

1. MINIMUM 4" EMBEDMENT INTO CONCRETE.
2. NAILS ARE NECESSARY IN STRAPS AND SEAT TO ACHIEVE DESIGN LOADS.
3. NAILS THROUGH CHORDS SHALL NOT FORCE THE TRUSS PLATE ON THE OPPOSITE SIDE.
4. FOR GENERAL NOTES, SEE SHEET 1.

PRODUCT REVISED
as complying with the Florida Building Code
NOA-No. 23-0210.01
Expir e 07/30/2025
By Miam oduct Control

JAVAD AHMAD PE, inc
8800 NW 23rd St, Miami FL
33172
Ph: (305) 424-8001
support@ja-pe.com
CONSULTING • STRUCTURAL DESIGN • FACADES • BUILDING ENVELOPE • SYSTEM DESIGN • PRODUCT APPROVALS

CLIENT: NU-VUE INDUSTRIES, INC
PROJECT: NOA NO. 20-0526.05 REVISION

REVISION

No.	DATE	BY	DESCRIPTION

date: 18/01/2023
scale: AS INDICATED
drawn by: BVS
checked by: BS
DRAWING NO. JA-1958.1-22

NVHCR/L & NVTH / NVTHS

TABLE 4
HURRICANE CLIPS

PRODUCT CODE	DESCRIPTION	GAUGE	FASTNERS 10d X 1-1/2"		ALLOWABLE LOADS (lbs)		
			HEADER	JOIST	UPLIFT	L1	L2
NVHCR	HURRICANE CLIP - RIGHT	18	6	6	525	253	333
NVHCL	HURRICANE CLIP - LEFT	18	6	6	525	253	333

TABLE 5
TRUSS ANCHORS NVTH & RIVETED TRUSS ANCHORS WITH SEAT NVTHS

PRODUCT CODE		H	GAUGE	
		LENGTH(IN)	SEAT	STRAP
NVTH-16	NVTHS-212	12	18	14
NVTH-18	NVTHS-214	14	18	14
NVTH-20	NVTHS-216	16	18	14
NVTH-22	NVTHS-218	18	18	14
NVTH-24	NVTHS-220	20	18	14
NVTH-26	NVTHS-222	22	18	14
NVTH-28	NVTHS-224	24	18	14
NVTH-30	NVTHS-226	26	18	14
NVTH-36	NVTHS-232	32	18	14
NVTH-48	NVTHS-244	44	18	14

NO. OF FASTNERS IN EACH STRAP 10d x1-1/2"	MAXIMUM UPLIFT LOADS (lbs)		
	UPLIFT	L1	L2
5	1032	560	525
6	1222	671	630
7	1275	783	735
8	1329	783	735
9	1383	783	735
10	1437	783	735
11	1490	783	735
12	1544	783	735
13	1598	783	735

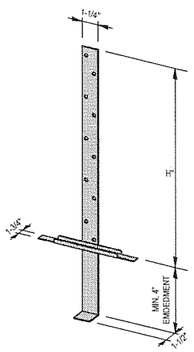

NVTHS

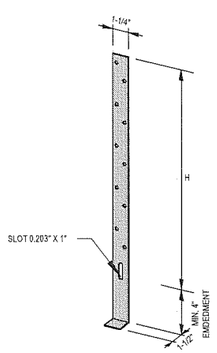

NVTH

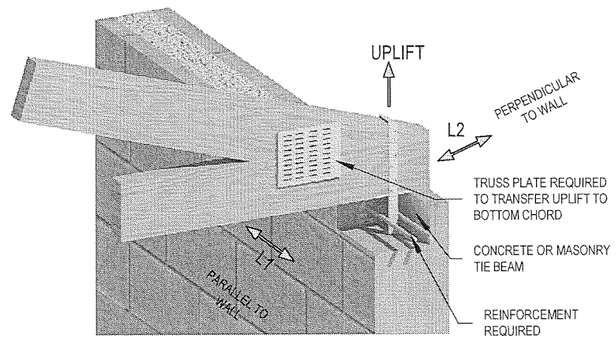

TYPICAL NVTH/NVTHS INSTALLATION

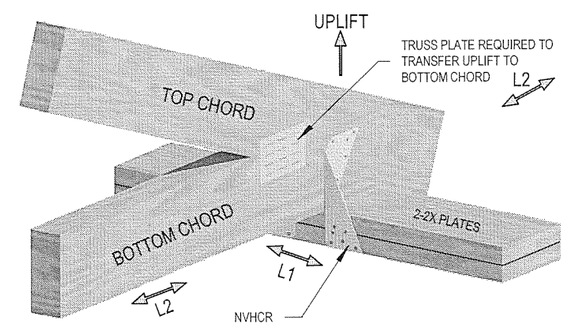

TYPICAL NVHCR/L INSTALLATION

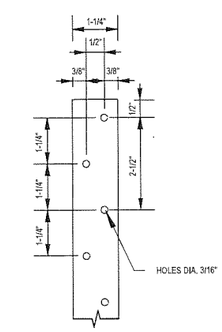

NVTH, NVTHS FRONT VIEW

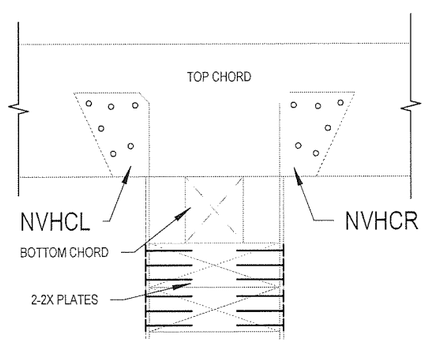

CROSS-SECTION

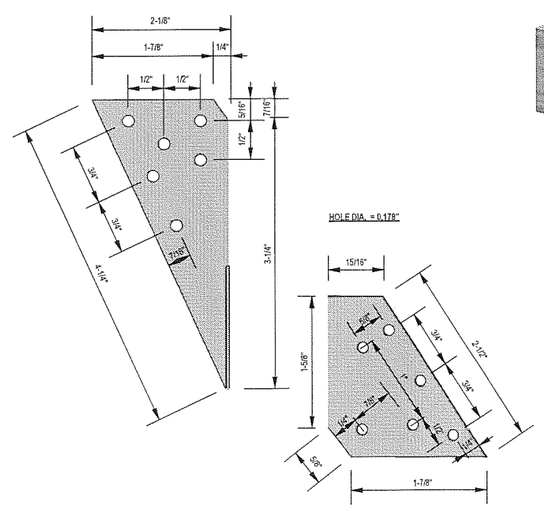

NOTES:

1. SEE GENERAL NOTES, SHEET 1.
2. FOR UPLIFT, USE TWO CLIPS, ONE ON EACH SIDE TO COMPLY WITH SECTION 2321.7 OF THE FBC

PRODUCT REVISED
as complying with the Florida Building Code
NOA-No. 23-0210.01
Expir 07/30/2025
By **Miam** **oduct Control**

JAVAD AHMAD PE, inc
8800 NW 23rd St, Miami FL
33172
Ph: (305) 424-8001
support@ja-pe.com
CONSULTING • STRUCTURAL DESIGN • FACADES • BUILDING ENVELOPE • SYSTEM DESIGN • PRODUCT APPROVALS

CLIENT : NU-VUE INDUSTRIES, INC

PROJECT : NOA NO. 20-0526.05 REVISION

REVISION			
No.	DATE	BY	DESCRIPTION

date: 18/01/2023
scale: AS INDICATED
drawn by: BVS
checked by: BS
DRAWING NO. JA-1958.1-22

NVSTA & NVHTA

TABLE 6
NVSTA - HEAVY DUTY ANCHORS WITH 14G NVTH STRAPS AND 1 PLY 20G SEAT

ASSEMBLY PRODUCT CODE	14G STRAP PRODUCT CODE	DIMENSION H (in.)	TOTAL NO. OF FASTENERS IN STRAP 10d X 1-1/2"	TOTAL NO. OF FASTENERS IN 20 GA. SEAT 10d X 1-1/2"	ALLOWABLE LOADS (lbs.)		
					UPLIFT*	L1*	L2*
NVSTA-12H	NVTH16	12	5	6	1308	700	1049
NVSTA-14H	NVTH18	14	6	6	1426	760	1144
NVSTA-16H	NVTH20	16	7	6	1545	823	1239
NVSTA-20H	NVTH24	20	8	6	1664	887	1335
NVSTA-22H	NVTH26	22	9	6	1783	950	1430
NVSTA-24H	NVTH28	24					
NVSTA-26H	NVTH30	26					
NVSTA-32H	NVTH36	32					
NVSTA-44H	NVTH48	44					

TABLE 7
NVHTA - HEAVY DUTY ANCHORS WITH 14G DOUBLE NVTH STRAPS AND 1 PLY 20G SEAT

ASSEMBLY PRODUCT CODE	14G STRAP PRODUCT CODE	DIMENSION H (in.)	TOTAL NO. OF FASTENERS IN STRAP 10d X 1-1/2"	TOTAL NO. OF FASTENERS IN 20 GA. SEAT 10d X 1-1/2"	ALLOWABLE LOADS (lbs.)			
					UPLIFT*	UPLIFT**	L1*	L2*
NVHTA-12H	NVTH16	12	10	6	1772	2078	1050	1450
NVHTA-14H	NVTH18	14	12	6	1994	2338	1181	1631
NVHTA-16H	NVTH20	16	14	6	2215	2598	1312	1812
NVHTA-20H	NVTH24	20	16	6	2437	2858	1444	1994
NVHTA-22H	NVTH26	22	18	6	2658	3117	1575	2175
NVHTA-24H	NVTH28	24						
NVHTA-26H	NVTH30	26						
NVHTA-32H	NVTH36	32						
NVHTA-44H	NVTH48	44						

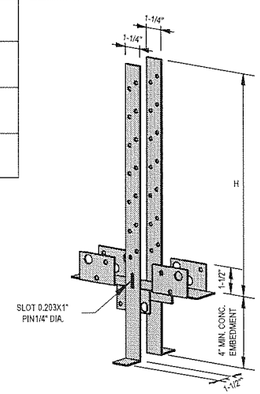

NVHTA WITH 14G DOUBLE NVTH STRAP

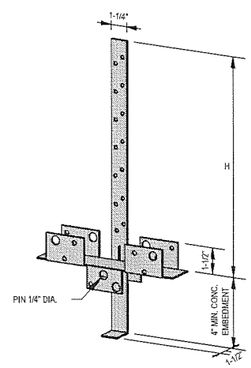

NVSTA WITH 14G SINGLE NVTH STRAP

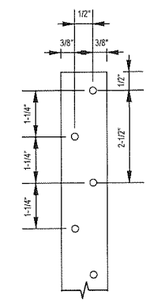

14G NVTH
FRONT VIEW

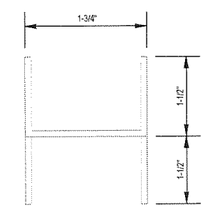

SIDE VIEW
20 GA. SEAT

NOTES:

1. SEE GENERAL NOTES, SHEET 1.
2. NAILS ARE NECESSARY IN STRAPS AND SEAT TO ACHIEVE DESIGN LOADS.
3. NAILS THROUGH CHORDS SHALL NOT FORCE THE TRUSS PLATE.
4. **FOR HIGHER UPLIFT LOADS, CONCRETE SHALL BE 3000PSI.
5. *BASED ON MINIMUM 2500 PSI CONCRETE.

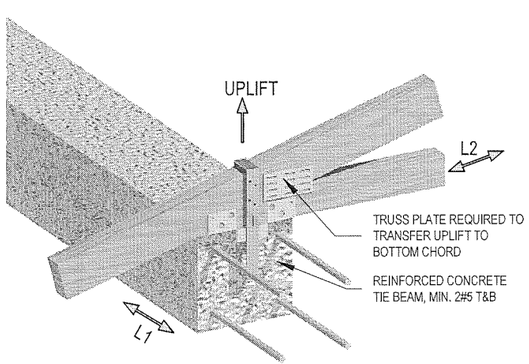

NVSTA
12H TO 44H INSTALLATION

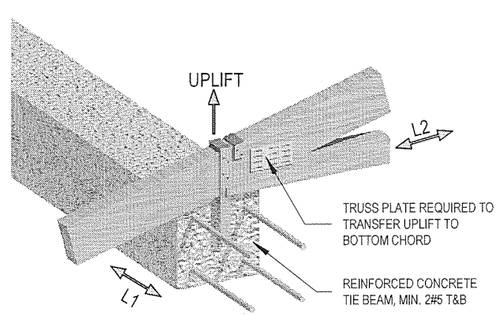

NVHTA
12H TO 44H INSTALLATION

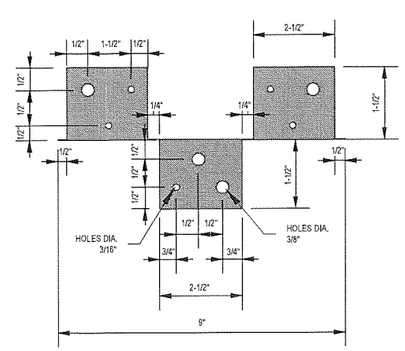

20 GA. SEAT

PRODUCT REVISED
as complying with the Florida Building Code
NOA-No. 23-0210.01
Expir e 07/30/2025
By Miam oduct Control

JAVAD AHMAD PE, inc
8800 NW 23rd St, Miami FL
33172
Ph: (305) 424-8001
support@ja-pe.com
CONSULTING • STRUCTURAL DESIGN • FACADES • BUILDING ENVELOPE • SYSTEM DESIGN • PRODUCT APPROVALS

CLIENT : NU-VUE INDUSTRIES, INC

PROJECT : NOA NO. 20-0526.05 REVISION

REVISION			
No.	DATE	BY	DESCRIPTION

Date: 18/01/2023
Scale: AS INDICATED
Drawn by: BVS
Checked by: BS
DRAWING NO. JA-1958.1-22

WEB BRACING RECOMMENDATIONS

BRACE BAY SIZE*	MAXIMUM TRUSS WEB FORCE (lbs.) (See note 7)									
	24" O.C.				48" O.C.				72" O.C.	
	BRACING MATERIAL TYPE				BRACING MATERIAL TYPE				BRACING MATERIAL TYPE	
	A	B	C	D	A	B	C	D	C	D
10'-0"	1610	1886	1886	2829						
12'-0"	1342	1572	1572	2358		3143	3143	4715	4715	7074
14'-0"	1150	1347	1347	2021						
16'-0"	1006	1179	1179	1768		2358	2358	3536		
18'-0"	894	1048	1048	1572					3143	4715
20'-0"	805	943	943	1414		1886	1886	2829		

*Bay size shall be measured in between the centers of pairs of diagonals.

TYPE	BRACING MATERIALS
A	1 X 4 IND. 45 SP -OR- 1 X 4 #2 SRB (DF, HF, SPF)
B	2 X 3 #3, STD, CONST (SPF, DF, HF, OR SP)
C	2 X 4 #3, STD, CONST (SPF, DF, HF, OR SP)
D	2 X 6 #3 OR BETTER (SPF, DF, HF, OR SP)

GENERAL NOTES

1. DIAGONAL BRACING IS REQUIRED TO TRANSFER THE CUMULATIVE LATERAL BRACE FORCE INTO THE ROOF AND/OR CEILING DIAPHRAGM. THE DIAPHRAGM IS TO BE DESIGNED BY A QUALIFIED PROFESSIONAL.
2. THESE CALCULATIONS ARE BASED ON LATERAL BRACE CAPACITY OF 2% OF THE WEB FORCE.
3. DIAGONAL BRACING MATERIAL MUST BE SAME SIZE AND GRADE OR BETTER, AS THE LATERAL BRACE MATERIAL, AND SHALL BE INSTALLED IN SUCH A MANNER THAT IT INTERSECTS WEB MEMBERS AT APPROX. 45 DEGREES AND SHALL BE NAILED AT EACH END AND EACH INTERMEDIATE TRUSS WITH 2-8d (0.131"x2.5") FOR 1x4 BRACES, 2-10d (0.131"x3") FOR 2x3 and 2x4 BRACES, AND 3-10d (0.131"x3") FOR 2x6 BRACES.
4. CONNECT LATERAL BRACE TO EACH TRUSS WITH 2-8d (0.131"x2.5") NAILS FOR 1x4 LATERAL BRACES, 2-10d (0.131"x3") NAILS FOR 2x3 and 2x4 LATERAL BRACES, AND 3-10d (0.131"x3") FOR 2x6 LATERAL BRACES.
5. LATERAL BRACE SHOULD BE CONTINUOUS AND SHOULD OVERLAP AT LEAST ONE TRUSS SPACE FOR CONTINUITY.
6. FOR ADDITIONAL GUIDANCE REGARDING DESIGN AND INSTALLATION OF BRACING, CONSULT DSB-89 TEMPORARY BRACING OF METAL PLATE CONNECTED WOOD TRUSSES AND BCSI 1 GUIDE TO GOOD PRACTICE FOR HANDLING, INSTALLING & BRACING OF METAL PLATE CONNECTED WOOD TRUSSES, JOINTLY PRODUCED BY WOOD TRUSS COUNCIL OF AMERICA and TRUSS PLATE INSTITUTE. www.sbcindustry.com and www.tpinst.org
7. REFER TO SPECIFIC TRUSS DESIGN DRAWING FOR WEB MEMBER FORCE.
8. TABULATED VALUES ARE BASED ON A DOL = 1.15

FOR STABILIZERS:

FOR A SPACING OF 24" O.C. ONLY, MITEK "STABILIZER" TRUSS BRACING SYSTEMS CAN BE SUBSTITUTED FOR TYPE A, B, C AND D BRACING MATERIAL. DIAGONAL BRACING FOR STABILIZERS ARE TO BE PROVIDED AT BAY SIZE INDICATED ABOVE. WHERE DIAPHRAGM BRACING IS REQUIRED AT PITCH BREAKS, STABILIZERS MAY BE REPLACED WITH WOOD BLOCKING. SEE "STABILIZER" TRUSS BRACING INSTALLATION GUIDE AND PRODUCT SPECIFICATION.

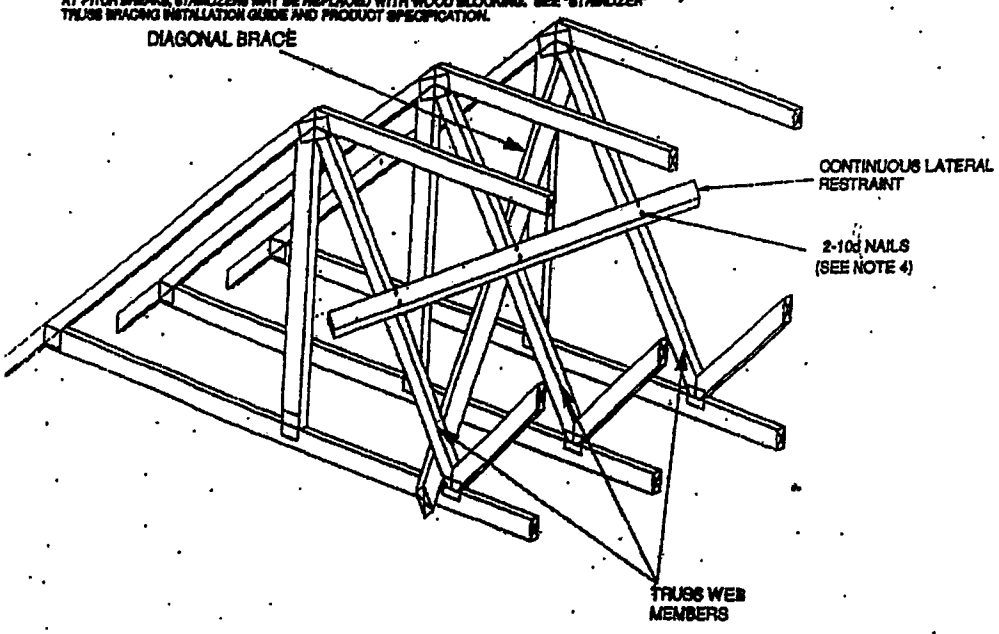

s information is provided as a recommendation to assist in the uirement for permanent bracing of the individual truss web nbers. Additional bracing may still be required for the stability he overall roof system. The method shown here is just one hod that can be used to provide stability against web buckling.

ARMANDO R. PEREZ
PE. # 28026
1811 SW 33 CT
MIAMI, FL. 33145
(305) 213 7443

DATE 9/19/16

9/19/16

L-BRACE DETAIL

Nailing Pattern		
L-Brace size	Nail Size	Nail Spacing
1x4 or 6	10d	8" o.c.
2x4, 6, or 8	16d	8" o.c.

Note: Nail along entire length of L-Brace (On Two-Ply's Nail to Both Plies)

Note: L-Bracing to be used when continuous lateral bracing is impractical. L-brace must cover 90% of web length.

	L-Brace Size for One-Ply Truss	
	Specified Continuous Rows of Lateral Bracing	
Web Size	1	2
2x3 or 2x4	1x4	***
2x6	1x6	***
2x8	2x8	***

*** DIRECT SUBSTITUTION NOT APLICABLE

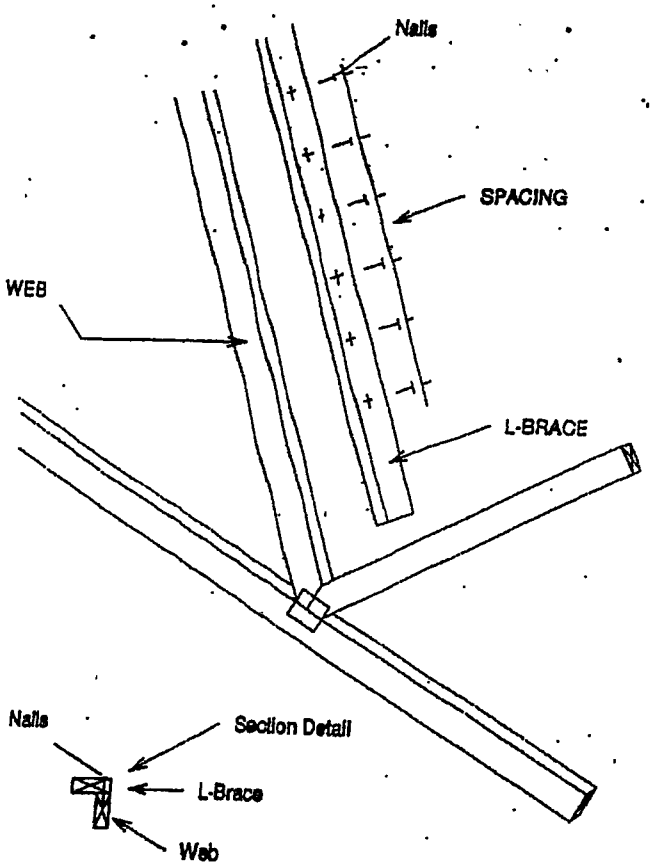

	L-Brace Size for Two-Ply Truss	
	Specified Continuous Rows of Lateral Bracing	
Web Size	1	2
2x3 or 2x4	2x4	***
2x6	2x6	***
2x8	2x8	***

*** DIRECT SUBSTITUTION NOT APLICABLE

ARMANDO R. PEREZ
PE. # 28026
1811 SW 33 CT
MIAMI, FL. 33145
(305) 213-7443

9/19/16

DATE 9/19/16

L-Brace must be same species grade (or better) as web member.

TRUSSED VALLEY SET DETAIL

ARMANDO PEREZ PE 28026

(TYPICAL)

GABLE END, COMMON TRUSS OR GIRDER TRUSS

NOTE: VALLEY STUD SPACING NOT TO EXCEED 48" O.C. SPACING

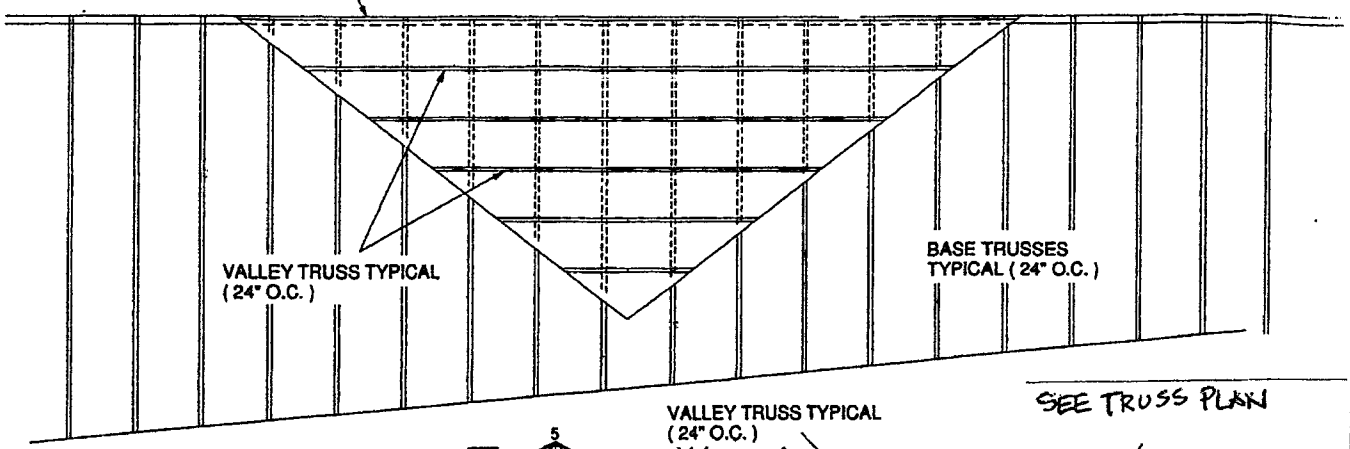

1. INSTALL BASE TRUSSES.
2. APPLY SHEATHING TO TOP CHORD OF SUPPORTING TRUSSES. VALLEY TRUSSES MAY PROVIDE BRACING IF SHEATHING IS NOT APPLIED. BASE TRUSSES MUST BE DESIGNED FOR PURLIN SPACING EQUIVALENT TO VALLEY TRUSS SPACING (NOT TO EXCEED 24" O.C.).
3. INSTALL VALLEY TRUSSES (24" O.C. MAXIMUM) AND SECURE TO BASE TRUSSES AS PER DETAIL A, B, OR C BELOW.
4. BRACE VALLEY WEBS IN ACCORDANCE WITH THE INDIVIDUAL DESIGN DRAWINGS.

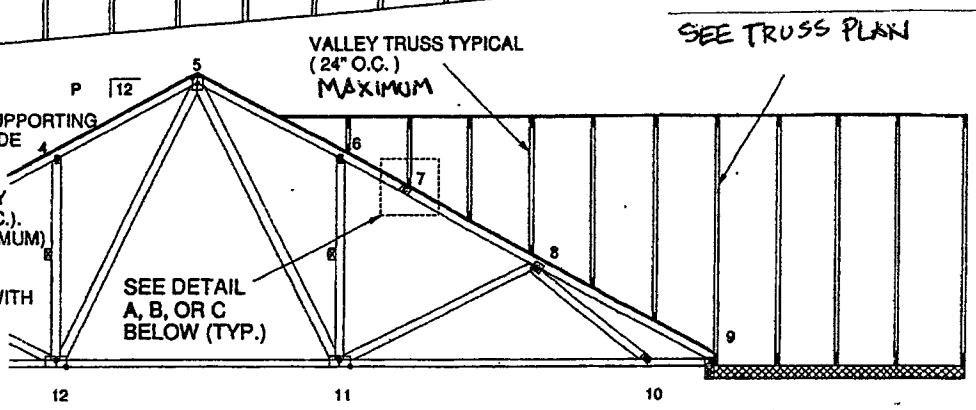

TOE - NAIL VALLEY TO BASE TRUSS W/ (2) 16d TOE NAILS

ATTACH 2x4 CONTINOUS NO.2 SPF TO THE FACE OF THE ROOF W/ TWO 16d (.131" x 3.5") NAILS INTO EACH TRUSS BELOW

SEE TRUSS PLAN FOR LOADS

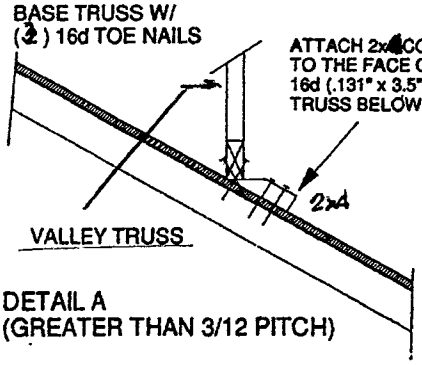

DETAIL A
(GREATER THAN 3/12 PITCH)

ATTACH 2x4 CONTINOUS NO.2 SPF BLOCK TO THE FACE OF THE ROOF W/ (3) 16d (.131" x 3.5") NAILS INTO EACH TRUSS BELOW. EACH TRUSS BELOW MUST HAVE A BLOCK ATTACHED TO IT.

TOE - NAIL VALLEY TO BASE TRUSS W/ (2) 16d TOE NAILS

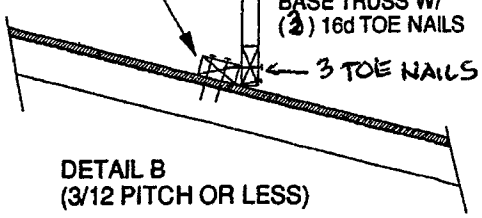

DETAIL B
(3/12 PITCH OR LESS)

ATTACH BEVELED 2x4 CONTINOUS NO.2 SPF TO THE FACE OF THE ROOF W/ TWO 16d (.131" x 3.5") NAILS INTO EACH TRUSS BELOW

ATTACH VALLEY TO BEVELED 2x4 W/ (2) 16d TOE NAILS

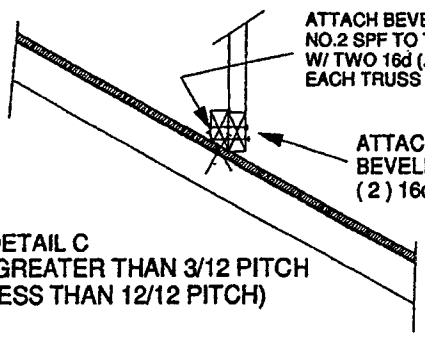

DETAIL C
(GREATER THAN 3/12 PITCH LESS THAN 12/12 PITCH)

TOE - NAIL VALLEY TO BASE TRUSS W/ (2) 16d TOE NAILS

ARMANDO R. PEREZ PE28026

786-255-4344 DATE 9/13/2013

1811 S W33 COURT HEMPFIL 33145