Dylan & Jamie Roy
Interior Remodeling & Addition

Architectural Index of Drawings	
Sheet Number	Sheet Name
A100	Existing Site Plan
A105	Proposed Site Plan
A108	Zoning Diagrams & Calculations
A130	Legends, Symbols, & Keynotes
A200	Existing Residence Floor Plan
A205	Existing Residence Roof Plan
A208	Proposed Demolition Floor Plan
A210	Proposed Addition& Remodeling Floor Plan
A215	Proposed Addition& Remodeling Roof Plan
A300	Proposed, Partial Master Suite RCP Plan
A400	Existing Elevations
A405	Existing Elevations
A410	Proposed Elevations
A500	Building Sections
A700	Sections & Details
A710	Details & Specifications
A900	Perspective Views

Structural Index of Drawings	
Sheet Number	Sheet Name
S-1	Partial Foundation / Ground Floor Plan
S-2	Partial Roof Framing Plan & Sections / Details
S-3	Sections & Typical Details
S-4	Notes & Schedules
S-5	Window Pressures / Elevations

M/E/P Index of Drawings	
Sheet Number	Sheet Name
E100	Electrical Site Plan
E200	Electrical Floor Plan
E300	Electrical Riser & Schedules
M100	Mechanical Notes & Details
M200	Mechanical Floor Plan
P100	Plumbing Site Plan
P200	Sanitary Plumbing Floor Plan
P300	Water Plumbing Floor PLan
P400	Gas Plumbing Floor Plan

INTERIOR REMODELING & ADDITION
PERMIT SET
12-20-2024

NOVUS Archetype
architecture / interior / planning
NOVUS Archetype, LLC
12721 SW 30th ST. MIAMI, FL 33175
PH: (305) 505-6910
email: julio@novusarchetype.com
AA26001460
Qualifier: Julio Pulido, AIA
License #: AR93904
Qualifier : Salvador Ben Mitrani, NCARB
License # : AR99606

STATE OF FLORIDA
JULIO PULIDO
AR93904
REGISTERED ARCHITECT

Julio Pulido
Digitally signed by Julio Pulido
Date: 2024.12.20 12:19:08 -05'00'

Dylan & Jamie Roy

Interior Remodeling & Addition

6783 SW 104th St Pincrest, Fl 33156

No.	Description	Date

Project number	24-011
Date	07-10-24
Drawn by	JP
Checked by	JP

SHEET TITLE

Cover Page

SHEET No.

A000

Miami Dade County Department of Regulatory and Economic Resources - Job Copy
20250085506 - 5/19/2025 11:05:46 AM
A000.pdf

Location Map_0 Referenced from Google Maps
NO TO SCALE

PROPERTY INFORMATION:
ADDRESS: 6783 SW 104th ST PINECREST, FL 33156
FOLIO No. 20-5002-000-1100
LEGAL DESCRIPTION: THE SW 1/4 OF THE SE 1/4 OF THE SE 1/4 OF SECTION 2, TOWNSHIP 55 SOUTH. RANGE 40 EAST LESS THE SOUTH 40 FEET. LESS THE EAST 125.00 FEET AND
LESS THE WEST 23.33 FEET OF THE EAST 148.33 FEET OF THE NORTH 67.60 FEET THEREOF, LYING AND BEING IN MIAMI-DADE COUNTY, FLORIDA.

LOT INFORMATION:
LOT SIZE = 60,333 SF

FLOOD INFORMATION:

COMMUNITY NUMBER:
PANEL NUMBER:
SUFFIX: L
DATE OF FIRM INDEX: 09/11/2009
FIRM ZONE: ZONE X
BASE FLOOD ELEVATION: N/A

NOTE:
REFER TO SURVEY FOR OTHER EXISTING SITE FEATURES, INCLUDING TREES, UTILITIES, ETC.

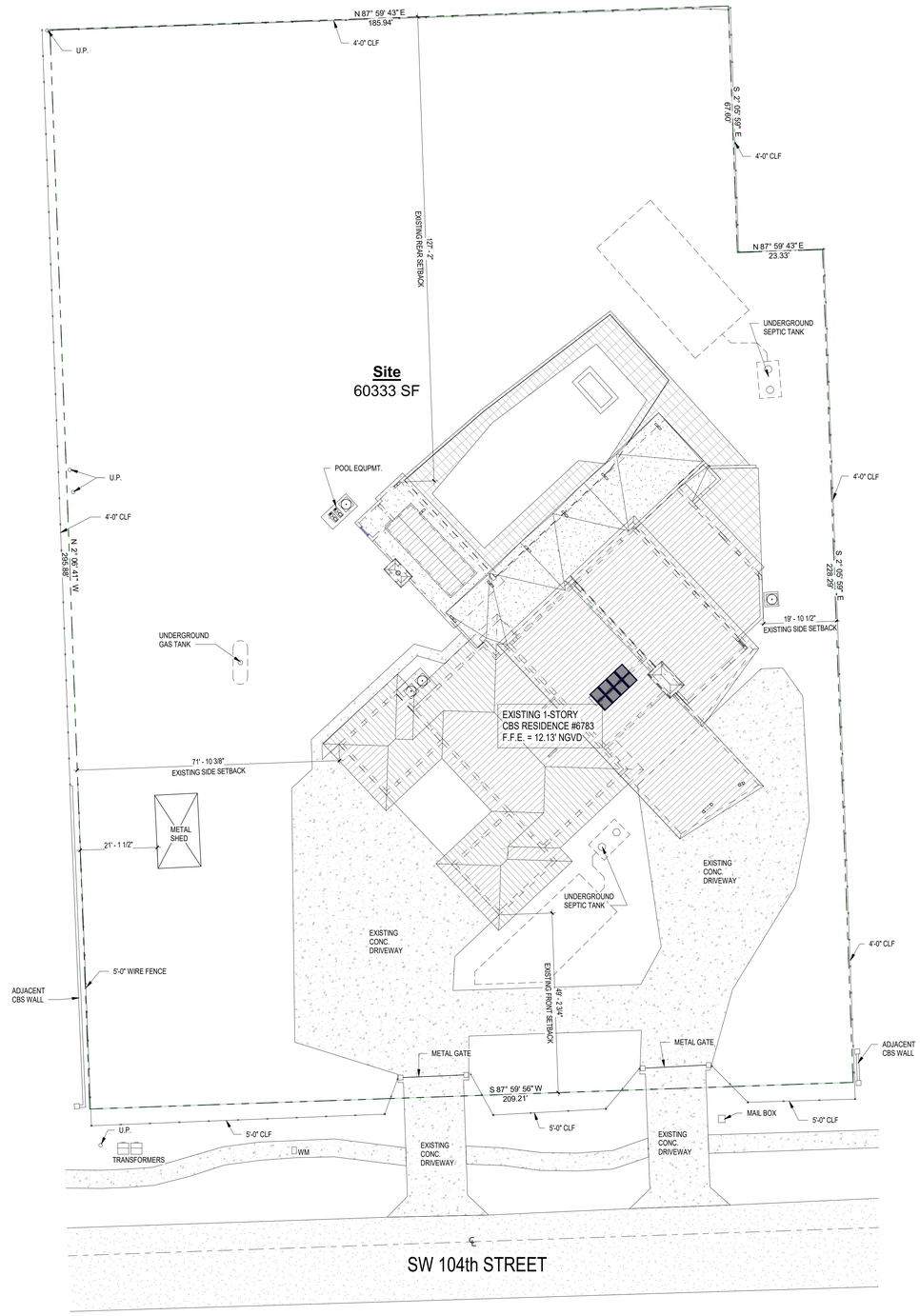

Existing Site Plan
1/16" = 1'-0"

NOVUS Archetype
architecture / interior / planning

NOVUS Archetype, LLC
12721 SW 30th ST. MIAMI, FL 33175
PH: (305) 505-6910
email: julio@novusarchetype.com
AA26001460
Qualifier: Julio Pulido, AIA
License #: AR93904
Qualifier : Salvador Ben Mitrani, NCARB
License # : AR99606

STATE OF FLORIDA
JULIO PULIDO
AR93904
REGISTERED ARCHITECT

Julio Pulido
Digitally signed by Julio Pulido
Date: 2024.12.20 12:20:03 -05'00'

Dylan & Jamie Roy

Interior Remodeling & Addition

6783 SW 104th St Pincrest, Fl 33156

No.	Description	Date

Project number	24-011
Date	07-10-24
Drawn by	JP
Checked by	JP

SHEET TITLE

Existing Site Plan

SHEET No.

A100

Miami Dade County Department of Regulatory and Economic Resources - Job Copy
2025008506 - 5/19/2025 11:05:46 AM
A100.pdf
Examiner Date Time Stamp Trade Stamp Name
TOLEDO, GABRIEL 4/14/2025 9:38:51 AM HRS Approved

Location Map_1 Referenced from Google Maps
NOT TO SCALE

SCOPE OF WORK DESCRIPTION:

THE SCOPE OF THE WORK UNDER THIS SUBMITTAL SHALL ENCOMPASS THE FOLLOWING:

-NEW ADDITION OF APPROXIMATELY 112 SF TO INCREASE THE CLOSET SPACE OF THE MASTER BEDROOM SUITE.
-NEW MASTER BEDROOM EXTERIOR GLASS DOORS.
-NEW MASTER BEDROOM EXTERIOR, HIGH, FIXED GLASS WINDOWS.
-NEW EXTERIOR TILE FINISH FOR MASTERBEDROOM OPEN PATIO.
-INTERIOR REMODELING OF MASTER BATHROOM WITH: NEW FIXTURES, LAYOUT, ACCESSORIES, FINISHES, LIGHTING, ETC.
-INTERIOR REMODELING OF MASTER BEDROOM SUITE WITH: NEW FINISHES, CEILINGS, LIGHTING, PAINTING, ETC.
-RELOCATION OF MASTER SUITE AHU AND CONDENSING UNIT.
-RELOCATION OF MASTER BEDROOM SUITE INTERIOR DOOR.
-CONVERTION OF UNUSED SAUNA SPACE INTO A CLOSET.
-NEW, BIGGER KITCHEN WINDOW.
-ROTATION OF AHU IN LIVING SPACE & RELOCATION OF A/C CLOSET DOOR.
-NEW CABINETRY AND STORAGE IN KITCHEN AREA.
-REPLACE ELECTRIC RANGE WITH GAS RANGE.
-REPLACE KITCHEN HOOD.
-REPLACE ISLAND CABINETRY AND COUNTER TOPS.
-REMOVE SHOWER AND TUB IN BATH 2 TO CREATE NEW CLOSETS AND STORAGE.
-NEW CABINETRY AND STORAGE IN PANTRY ROOM.
-NEW CABINETRY AND STORAGE IN OFFICE ROOM.
-REMOVE EXTERIOR DOOR IN HALLWAY ADJACENT TO LAUNDRY ROOM, AND PROVIDE A NEW CLASEMENT WINDOW.
-NEW CABINET AND LAUNDRY SINK.
-NEW GLASS DOOR FOR GYM ROOM.
-NEW CABINETRY AND STORAGE IN GYM ROOM.
-NEW CLOSETS IN GUEST BEDROOM.
-NEW CLOSET & CABINETRY IN REX'S BEDROOM.
-NEW CLOSET IN HALL.
-NEW CLOSETS AND CABINETRY IN TRY'S BEDROOM.
-NEW CABINETRY AND CLOSETS IN DEVIN'S BEDROOM.

NOTE:
-PERIMETER FENCES AND GATES ARE TO REMAIN AND NOT ALTERED UNDER THIS SUBMITTAL.
-POOL BARRIER FENCE TO REMAIN AND NOT ALTERED UNDER THIS SUBMITTAL.

CODES IN EFFECT:
FBC 8th EDITION RESIDENTIAL 2023
FBC 8th EDITION MECHANICAL 2023
FBC 8th EDITION ENERGY CONSERVATION 2023
FBC 8th EDITION TEST PROTOCOLS FOR HVHZ 2023
VILLAGE OF PINECREST ZONING CODE, LATEST EDITION

CONSTRUCTION LEGEND & INFORMATION:
OCCUPANCY CLASSIFICATION: R-3 (SINGLE FAMILY RESIDENTIAL)
CLASSIFICATION OF WORK: NEW CONSTRUCTION TYPE:
TYPE V-B: NS (NO - SPRINKLERS).
1-STORY, LESS THAN 40 '-0" HEIGHT

UNDER A SEPARATE PERMIT:
-ANY WORK ON THE RIGHT OF WAY
-EXTERIOR WINDOWS AND DOORS
-SWIMMING POOL & POOL EQUIPMENT / LIGHTING
-MECHANICAL, ELECTRICAL & PLUMBING TRADES
-GENERATOR AND GAS TANK
-DRIVEWAYS APPROACH
-ROOFING SYSTEM
-LANDSCAPE IRRIGATION SYSTEM

DEFERRED SUBMITTALS:
-SEPTIC SYSTEM (APPLICATION BY SEPTIC TANK CONTRACTOR)
-SWIMMING POOL, POOL DECK, POOL EQUIPMENT, (BY POOL CONTRACTOR)
-FLOOR & ROOF TRUSSES (ENGINEERED SHOP DRAWINGS SUBMITTAL)
-RAILING (ENGINEERED SHOP DRAWINGS SUBMITTAL)
-EXTERIOR WINDOWS & DOORS (SHOP DRAWINGS SUBMITTAL WITH NOAs, PRODUCT APPROVALS, ETC.)
-ROOFING SYSTEM (SHOP DRAWINGS SUBMITTAL WITH PRODUCT APPROVAL, SPECS, SYSTEM DETAILS, ETC.)

NOTE:
REFER TO SURVEY FOR OTHER EXISTING SITE FEATURES, INCLUDING TREES, UTILITIES, ETC.

ALSO REFER TO TREE REMOVAL / RELOCATION PERMIT FOR PALMS TO BE RELOCATED / REMOVED.

ZONING INFORMATION:
ZONING DISTRICT: EU-1 (SINGLE FAMILY RESIDENTIAL ESTATES)
USE: PROPOSED USE = RESIDENTIAL (SINGLE FAMILY)

REFER TO ZONING DIAGRAMS (SHEETS A108) FOR ZONING CALCULATIONS

SETBACKS:
MAIN HOUSE:

	REQUIRED	EXISTING	PROPOSED ADD.
FRONT:	50'-0"	49'-2 3/4"	N/A
SIDE INTERIOR:	20'-0"	19'-10 1/2"	20'-1"
REAR:	25'-0"	127'-2"	N/A

BUILDING HEIGHT:
MAXIMUM ALLOWED: 2-STORIES OR 35'-0"
FLAT ROOF STRUCTURES: 28'-0" TO TOP OF ROOF OR 29'-6" TO THE TOP OF THE PARAPET WALL CONCEALING THE ROOF

EXISTING HEIGHT: 25'-10" FROM THE BASE ELEVATION LINE (COR + 8") TO THE TOP OF THE FIREPLACE. ALSO SEE ELEVATIONS FOR DIMENSIONAL SPECS.

NEW ADDITION: 10'-9" FROM THE BASE ELEVATION LINE (COR + 8") TO THE TOP OF THE PARAPET. ALSO SEE ELEVATIONS FOR DIMENSIONAL SPECS.

Area Schedule (Living Area (A/C)	
Name	Area
Living-A/C Area: Existing House	5119 SF
Living-A/C Area: New Addition	112 SF
Living-A/C Area: New Closet	69 SF
Grand total: 3	5299 SF

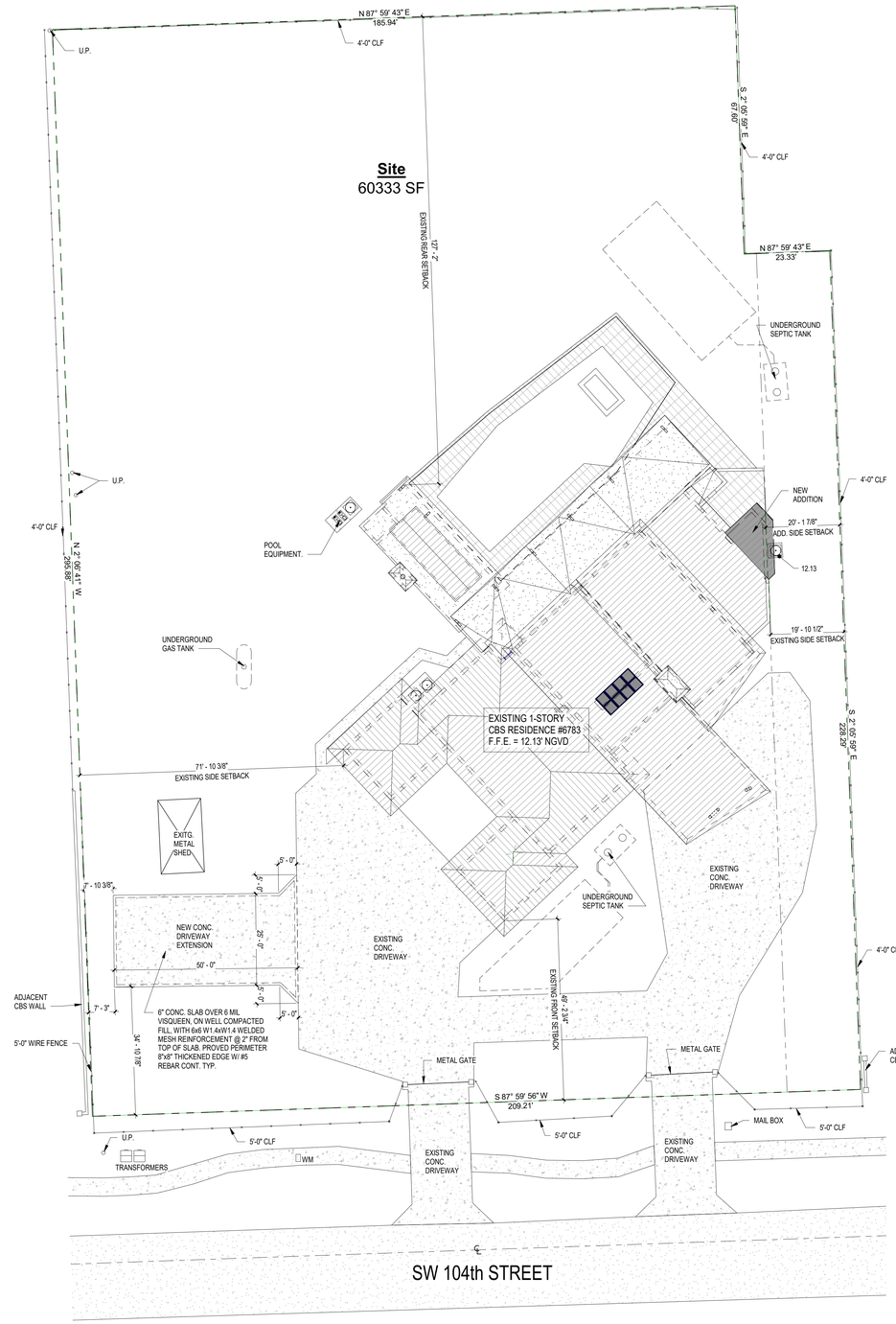

Proposed Site Plan
1/16" = 1'-0"

NOVUS Archetype
architecture / interior / planning
NOVUS Archetype, LLC
12721 SW 30th ST. MIAMI, FL 33175
PH: (305) 505-6910
email: julio@novusarchetype.com
AA26001460
Qualifier: Julio Pulido, AIA
License #: AR93904
Qualifier : Salvador Ben Mitrani, NCARB
License # : AR99606

STATE OF FLORIDA
JULIO PULIDO
AR93904
REGISTERED ARCHITECT

Julio Pulido
Digitally signed by Julio Pulido
Date: 2024.12.20 12:20:58 -05'00'

Dylan & Jamie Roy

Interior Remodeling & Addition

6783 SW 104th St Pincrest, Fl 33156

No.	Description	Date

Project number	24-011
Date	07-10-24
Drawn by	JP
Checked by	JP

SHEET TITLE
Proposed Site Plan

SHEET No.
A105

Miami Dade County Department of Regulatory and Economic Resources - Job Copy
2025008506 - 5/19/2025 11:05:46 AM
A105.pdf
Examiner Date Time Stamp Trade Stamp Name
SARDINA, YALENYS 2/4/2025 8:06:31 AM DERM Approved

Lot Coverage & F.A.R. Areas

- Lot Coverage / F.A.R.: Existing House
- Lot Coverage / F.A.R.: Existing Shed
- Lot Coverage / F.A.R.: New Addition

1 Lot Coverage & F.A.R. Areas Plan
1/16" = 1'-0"

Area Schedule (Lot Coverage & F.A.R.)		
Name	Area	% of Lot
Lot Coverage / F.A.R.: Existing House	8196 SF	13.585268
Lot Coverage / F.A.R.: Existing Shed	236 SF	0.391181
Lot Coverage / F.A.R.: New Addition	112 SF	0.185429
Grand total: 3	8544 SF	14.161877

LOT COVERAGE & F.A.R. CALCULATIONS:

1-STORY STRUCTURE:
LOT SIZE = 60,333 SF
MAX ALLOWED FOR RESIDENCE 20% x 60,333 = 12,066.6 sf
PROPOSED LOT COVERAGE & F.A.R. = 8,544 sf OR 14.16%
(EVERYTHING UNDER ROOF)

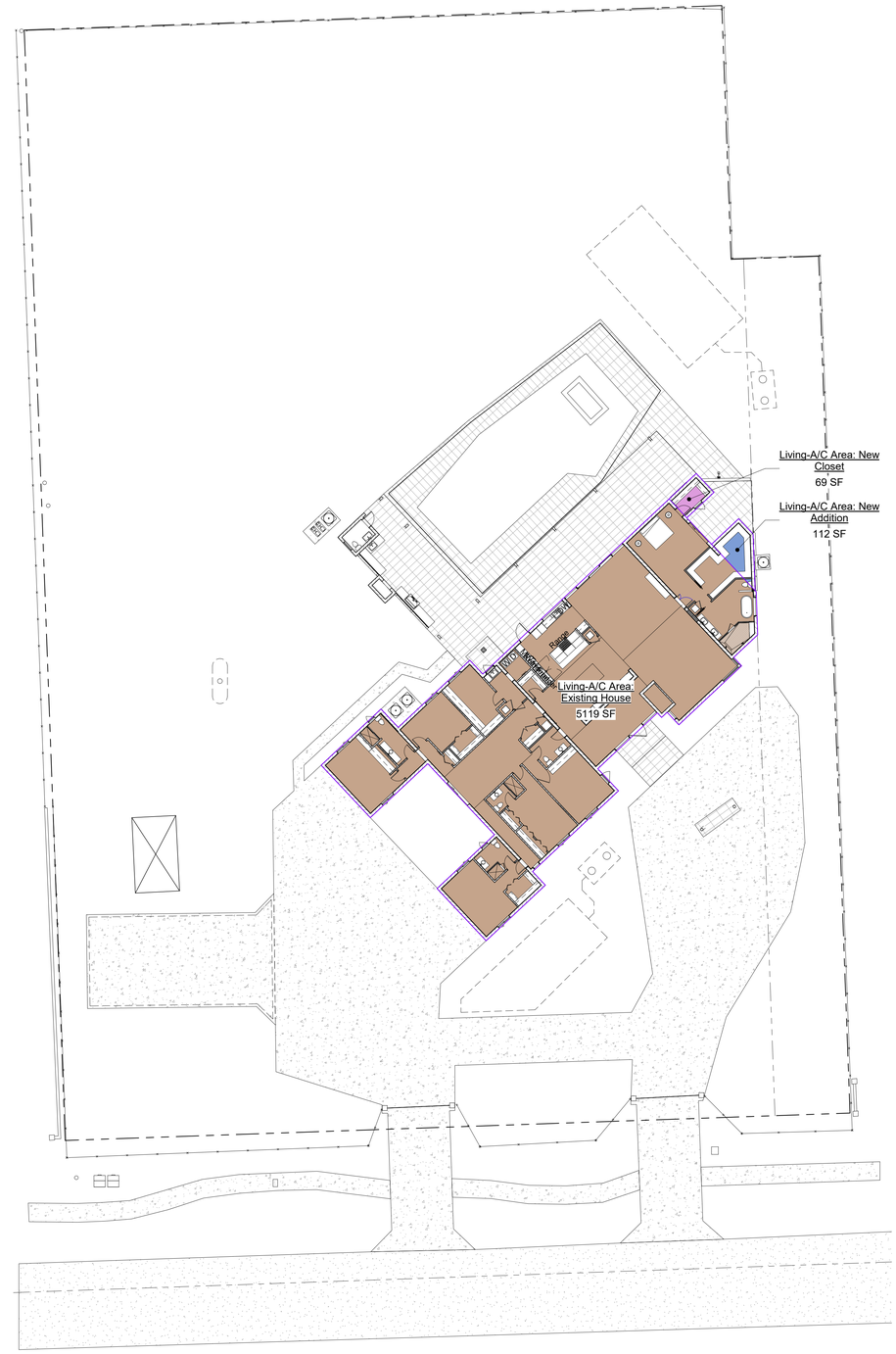

Living-A/C Areas

- Living-A/C Area: Existing House
- Living-A/C Area: New Addition
- Living-A/C Area: New Closet

2 Living-A/C Areas Plan
1/16" = 1'-0"

Area Schedule (Living Area (A/C)	
Name	Area
Living-A/C Area: Existing House	5119 SF
Living-A/C Area: New Addition	112 SF
Living-A/C Area: New Closet	69 SF
Grand total: 3	5299 SF

NOVUS Archetype
architecture / interior / planning

NOVUS Archetype, LLC
12721 SW 30th ST. MIAMI, FL 33175
PH: (305) 505-6910
email: julio@novusarchetype.com
AA26001460
Qualifier: Julio Pulido, AIA
License #: AR93904
Qualifier : Salvador Ben Mitrani, NCARB
License # : AR99606

STATE OF FLORIDA
JULIO PULIDO
AR93904
REGISTERED ARCHITECT

Julio Pulido
Digitally signed by Julio Pulido
Date: 2024.12.20 12:22:16 -05'00'

Dylan & Jamie Roy

Interior Remodeling & Addition

6783 SW 104th St Pincrest, Fl 33156

No.	Description	Date

Project number	24-011
Date	07-10-24
Drawn by	JP
Checked by	JP

SHEET TITLE

Zoning Diagrams & Calculations

SHEET No.

A108

Miami Dade County Department of Regulatory and Economic Resources - Job Copy
2025008506 - 5/19/2025 11:05:46 AM
A108.pdf

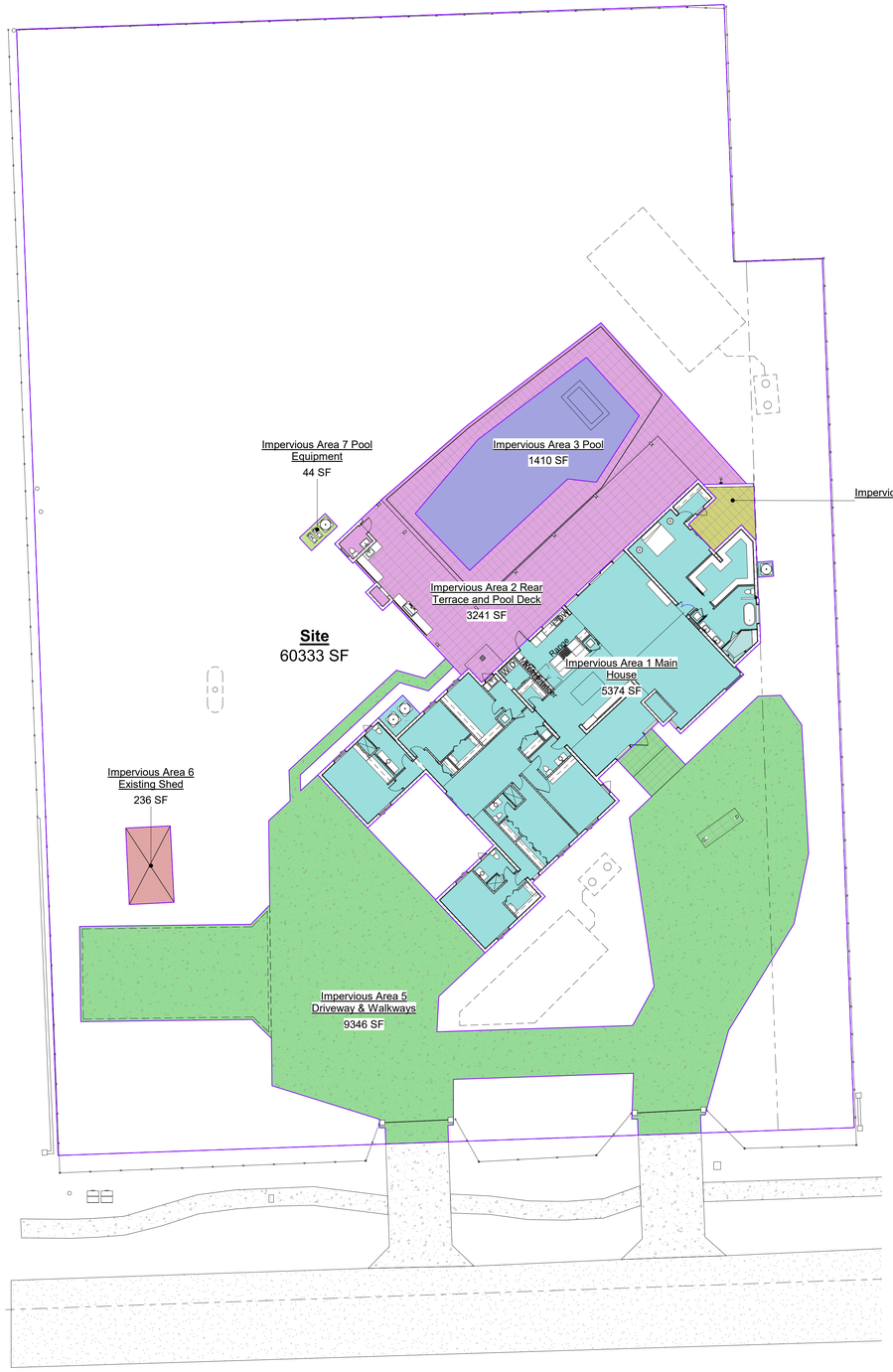

Area Schedule (Impervious Area)		
Name	Area	% of Lot
Impervious Area 5 Driveway & Walkways	9346 SF	15.490797
Impervious Area 1 Main House	5374 SF	8.907508
Impervious Area 6 Existing Shed	236 SF	0.391181
Impervious Area 7 Pool Equipment	44 SF	0.072192
Impervious Area 2 Rear Terrace and Pool Deck	3241 SF	5.372335
Impervious Area 3 Pool	1410 SF	2.336644
Impervious Area 4 Patio	195 SF	0.323369
Grand total	19846 SF	32.894026

IMPERVIOUS AREA CALCULATIONS:

LOT SIZE = 60,333 SF
MAX ALLOWED IMPERVIOUS AREA 45% x 60,333 = 27,149.85 sf
PROPOSED IMPERVIOUS AREA = 19,846 sf OR 32.89%

Impervious Areas

- Impervious Area 1 Main House
- Impervious Area 2 Rear Terrace and Pool Deck
- Impervious Area 3 Pool
- Impervious Area 4 Patio
- Impervious Area 5 Driveway & Walkways
- Impervious Area 6 Existing Shed
- Impervious Area 7 Pool Equipment

1 Impervious Areas Plan
1/16" = 1'-0"

Area Schedule (Green Area)		
Name	Area	% of Lot
Green-Pervious Area 1	36961 SF	61.26238
Green-Pervious Area 3	2029 SF	3.363723
Green-Pervious Area 2	780 SF	1.292867
Green-Pervious Area 4	542 SF	0.898236
Green-Pervious Area 5	175 SF	0.289451
Grand total: 5	40487 SF	67.106658

GREEN AREA CALCULATIONS:

LOT SIZE = 60,333 SF
MINIMUM REQUIRED GREEN AREA 55% x 60,333 = 33,183.15 sf
PROPOSED GREEN AREA = 40,487 sf OR 67.11%

Green Area

- Green-Pervious Area 1
- Green-Pervious Area 2
- Green-Pervious Area 3
- Green-Pervious Area 4
- Green-Pervious Area 5

2 Green-Pervious Areas Plan
1/16" = 1'-0"

NOVUS Archetype
architecture / interior / planning

NOVUS Archetype, LLC
12721 SW 30th ST. MIAMI, FL 33175
PH: (305) 505-6910
email: julio@novusarchetype.com
AA26001460
Qualifier: Julio Pulido, AIA
License #: AR93904
Qualifier : Salvador Ben Mitrani, NCARB
License # : AR99606

STATE OF FLORIDA
JULIO PULIDO
AR93904
REGISTERED ARCHITECT

Julio Pulido
Digitally signed by Julio Pulido
Date: 2024.12.20 12:23:15 -05'00'

Dylan & Jamie Roy

Interior Remodeling & Addition

6783 SW 104th St Pincrest, Fl 33156

No.	Description	Date

Project number	24-011
Date	07-10-24
Drawn by	JP
Checked by	JP

SHEET TITLE

Zoning Diagrams & Calculations

SHEET No.

A110

Miami Dade County Department of Regulatory and Economic Resources - Job Copy
2025008506 - 5/19/2025 11:05:46 AM
A110.pdf

Symbol	Description
Room name 150 SF	AREA TAG WITH NAME & AREA
1 A101 SIM	DETAIL CALLOUT HEAD
1i 1'-0" A.F.F.	CEILING TAG WITH MATERIAL & ELEVATION
℄	CENTER LINE
?	KEY NOTE MARK
101	DOOR TAG
1 Ref / 1 Ref / A101 / 1 Ref / 1 Ref	INTERIOR ELEVATIONS SYMBOL TAG
Ref 1 / Ref 1 A101 1 Ref / 1 Ref	EXTERIOR ELEVATIONS SYMBOL TAG
0	GRID HEAD TAG
	NORTH ARROW SYMBOL
1	REVISION TAG
1 A101 SIM	SECTION HEAD SYMBOL
	ELEVATION SYMBOL
1 View Name 1/8" = 1'-0"	VIEW REFERENCE SYMBOL
1i	WALL TYPE TAG
1t	WINDOW TAG

Symbols
1/4" = 1'-0"

Keynote Legend & General Notes

Key Value	Keynote Text
01-000	GENERAL NOTES
01-001	ALL WORK SHALL BE IN ACCORDANCE WITH APPLICABLE NATIONAL AND LOCAL CODES AND CONVENTIONAL GUIDELINES, IN EFFECT AT THE TIME OF SUBMITTAL OF THIS PROJECT.
01-002	ALL WORK SHALL BE PERFORMED IN THE BEST AND MOST PROFESSIONAL MANNER BY CRAFTSMEN SKILLED, LICENSED AND INSURED IN THEIR RESPECTIVE TRADES.
01-003	THESE PLANS MAY BE USED ONLY UNDER SUCH CONDITIONS IN WHICH ALL APPLICABLE SAFETY LAWS, RULES, AND REGULATIONS ARE BEING OBSERVED. COMPLIANCE WITH SUCH SAFETY LAWS, RULES, AND REGULATIONS IS THE SOLE RESPONSIBILITY OF THE GENERAL CONTRACTOR.
01-004	THE ARCHITECT SHALL BE PROVIDED WITH SHOP DRAWINGS AND/OR SAMPLES OF CUSTOM FABRICATED ITEMS PRIOR TO CONSTRUCTION. THE ARCHITECT SHALL BE CONSULTED FOR THE ITEMS NOT SHOWN IN THE DRAWINGS. SUBSTITUTIONS SHALL BE PERMITTED ONLY UPON WRITTEN CONSENT OF THE ARCHITECT.
01-005	WRITTEN DIMENSIONS TAKE PRECEDENCE OVER SCALED DIMENSIONS. LARGER SCALE DETAILS TAKE PRECEDENCE OVER SMALLER SCALE DETAILS.
01-006	THE CONTRACTOR SHALL VERIFY AND BE RESPONSIBLE FOR VERIFYING ALL QUANTITIES ON THE DRAWINGS, DIMENSIONS AND CONDITIONS ON THE SITE ETC. THE ARCHITECT SHALL BE NOTIFIED OF ANY AND ALL DISCREPANCIES.
01-007	THE CONTRACTOR SHALL BE RESPONSIBLE FOR ALL PERMITS, FEES, APPROVALS, INSURANCE, AND TAXES NECESSARY TO THE CONSTRUCTION OF THIS PROJECT.
01-008	CONTRACTOR SHALL PROVIDE AND BE RESPONSIBLE FOR ALL SEPARATE PERMITS AS REQUIRED BY THE MUNICIPALITY ISSUING THE GENERAL BUILDING PERMIT.
01-009	GENERAL CONTRACTOR SHALL FURNISH A COMPLETE SET OF DRAWINGS AND ADDENDUM'S TO ALL SUBCONTRACTORS ON THE JOB (ELECTRICAL, MECHANICAL, PLUMBING, INTERIOR PARTITIONS ETC.) AND COORDINATE THEIR WORK. ANY DISCREPANCIES AND/OR CONFLICTS IN THE DRAWINGS SHALL BE NOTIFIED TO THE ARCHITECT BEFORE PROCEEDING WITH ANY INSTALLATION. FAILURE TO DO SO WILL BE THE ENTIRE RESPONSIBILITY OF THE GENERAL CONTRACTOR. ANY COSTS ARISING TO CORRECT THE DISCREPANCY AND/OR CONFLICT SHALL BE BORNE BY THE RESPONSIBLE PARTY.
01-010	CONTRACTOR SHALL BE RESPONSIBLE FOR ALL MEANS OF CONSTRUCTION AND FOR ALL MEANS OF SAFETY DURING CONSTRUCTION. CONTRACTOR SHALL COMPLY WITH ALL APPLICABLE SAFETY PRECAUTIONS AS PER OSHA.
01-011	DELIVERY OF MATERIALS, SUPPLIES, TOOLS, ETC. SHALL BE COORDINATED WITH THE OWNER AND CONDOMINIUM ASSOCIATION. WORK HOURS AND THE MANNER IN WHICH THE WORK WILL BE PERFORMED INSIDE THE CONDOMINIUM ASSOCIATION SHALL BE COORDINATED WITH THE OWNER / CONDOMINIUM ASSOCIATION.
01-012	FOR STANDARD CONSTRUCTION DETAILS NOT SHOWN ON THE DRAWINGS, GENERAL CONTRACTOR SHALL CONSULT THE ARCHITECT AND/OR PROCEED IN ACCORDANCE WITH THE APPLICABLE CODES AND ESTABLISHED GOOD STANDARD BUILDING PRACTICES.
01-013	THIS SET OF PLANS HAS BEEN PREPARED TO COMPLY WITH THE APPLICABLE MINIMUM BUILDING CODES.
01-014	CONSTRUCTION SHALL PROCEED IN ACCORDANCE WITH THE OFFICIAL DRAWINGS APPROVED BY THE BUILDING OFFICIAL HAVING JURISDICTION. IT IS THE GENERAL CONTRACTOR'S RESPONSIBILITY TO FURNISH THE LATEST CORRECT SET OF DRAWINGS TO ALL SUB-CONTRACTORS. NO DEVIATION OF THE APPROVED SET OF DRAWINGS WILL BE MADE IN THE FIELD WITHOUT THE EXPRESSED WRITTEN CONSENT OF THE ARCHITECT AND BUILDING OFFICIAL. IN SUCH CASE THE ARCHITECT SHALL PREPARE A REVISION IN ACCORDANCE WITH THE CHANGE. APPROVAL FROM THE BUILDING OFFICIAL SHALL BE OBTAINED BY THE CONTRACTOR BEFORE PROCEEDING WITH ANY WORK.
01-015	CONTRACTOR SHALL BE RESPONSIBLE FOR EXECUTING THE WORK AS INTENDED IN THESE DRAWINGS. IN SOME INSTANCES, THESE DRAWINGS MAY NOT EXPLICITLY EXPRESS OR DEPICT A PARTICULAR SCOPE OF WORK OR COMPONENT, BUT RATHER EXPRESS AN INTENT OR PERFORMANCE OBJECTIVE. THE GENERAL CONTRACTOR SHALL DETERMINE ALL NECESSARY AND REQUIRED SCOPE OF WORK, COMPONENTS, SYSTEMS, ETC. TO ACHIEVE THE INTENT AND / OR PERFORMANCE STANDARDS. IF ANY QUESTIONS OR DISCREPANCIES CONTRACTOR SHALL VERIFY WITH ARCHITECT / EMGINEER OF RECORD BEFORE EXECUTION OF THE WORK, MANUFACTURING, ORDERING, OR INSTALLATION.
01-100	
02-000	SITE WORK AND DEMOLITION.
02-001	GENERAL CONTRACTOR SHALL VERIFY WITH ALL UTILITY COMPANIES THE LOCATION OF ALL EXISTING ABOVE AND BELOW GROUND UTILITIES (GAS, ELECTRIC, PHONE, WATER, SEWER, ETC.) AND STAKE OUT IN THE FIELD ALL UTILITIES KNOWN AND ENCOUNTERED PRIOR TO PROCEEDING WITH ANY DEMOLITION / EXCAVATION WORK. OWNER SHALL NOT AUTHORIZE ANY IMPROVEMENTS AND/OR DEMOLITION WORK UNTIL PERMIT IS SECURED FROM AGENCIES HAVING JURISDICTION.
02-002	REFER TO STRUCTURAL DWGS. AND / OR GEOTECHNICAL REPORTS AND STUDIES FOR SOIL REMOVAL, FILL, COMPACTION SPECIFICATIONS, AND ALL OTHER INFORMATION REGARDING SITE PREPARATION, CUT/FILL, ETC.
02-009	EXISTING COLUMN TO BE REMOVED.
02-012	EXISTING CONCRETE SLAB TO BE REMOVED.
02-013	EXISTING TILE FLOOR FINISH TO BE REMOVED IN THIS AREAS, TYP.
02-019	PORTIONS OF EXISTING WALLS TO BE REMOVED.
02-036	EXISTING DOOR / WINDOW TO BE REMOVED.
02-045	EXISTING FIXTURES, CABINETS, MILLWORK, COUNTER TOPS, ACCESSORIES, ETC. TO BE REMOVED, TYP.
02-046	EXISTING PLUMBING FIXTURES, CONTROLS, ACCESSORIES, FAUCETS, ETC. TO BE REMOVED AND REPLACED WITH NEW ONES IN THE SAME LOCATION, TYP.
02-047	EXISTING APPLIANCES AND EQUIPMENT TO BE REMOVED. COORDINATE WITH OWNER / OWNER REPRESENTATIVE FOR DISPOSAL, REUSE, AND / OR STORAGE.
02-048	EXISTING EQUIPMENT / COMPONET TO BE REMOVER OR RELOCATED.
02-050	THE DEMOLITION SCOPE OF WORK HAS BEEN GENERALLY INDICATED ON THE DRAWINGS FOR CONTRACTOR'S REFERENCE. IT SHALL BE THE CONTRACTOR'S RESPONSIBILITY TO DETERMINE THE FULL SCOPE OF WORK, EXTENT, NATURE AND MANNER OF DEMOLITION REQUIRED.
02-051	ONLY WORKMEN SKILLED AND KNOWLEDGEABLE IN THEIR RESPECTIVE TRADES SHALL BE EMPLOYED IN THE DEMOLITION WORK.
02-052	CONTRACTOR SHALL TAKE SPECIAL CARE TO DEMOLISH ONLY THAT WORK WHICH IS REQUIRED TO BE DEMOLISHED AND NOT TO DISTURB ANY WORK OR ELEMENTS THAT ARE TO REMAIN. IF IN THE COURSE OF DEMOLITION, CONTRACTOR DESTROYS OR DISTURBS ANY WORK THAT IS TO REMAIN,THEN THE CONTRACTOR, AT ITS OWN EXPENSE, SHALL REPAIR OR REPLACE SUCH WORK AS NECESSARY.
02-053	ANY CUTS, AND PENETRATIONS IN EXISTING WORK REQUIRED TO ACCOMPLISH NEW WORK SHALL BE KEPT TO A MINIMUM.
02-054	ALL DEMOLITION WORK TO BE DONE DURING THOSE HOURS DESIGNATED BY OWNER.
02-055	REMOVE AND DISCARD ALL DEMOLISHED MATERIALS IN A MANNER FULLY APPROVED BY MIAMI DADE COUNTY AND ANY OTHER GOVERNMENT AGENCY HAVING JURISDICTION.
02-056	DO NOT SCALE DRAWINGS.
02-057	CONTRACTOR SHALL VERIFY ALL DIMENSIONS AND JOB CONDITIONS PRIOR TO SUBMITTING BIDS AND SHALL REPORT TO THE OWNER'S REPRESENTATIVE ANY DISCREPANCIES OR OMISSIONS WHICH WOULD INTERFERE WITH THE SATISFACTORY COMPLETION OF THE WORK. ALL BUILDING DEPARTMENT PERMITS SHALL BE OBTAIN BEFORE COMMENCING ANY WORK.
02-058	IN ALL CASES THE CONTRACTOR SHALL PATCH ALL DISTURBED EXISTING STRUCTURE OR ELEMENTS THAT ARE TO REMAIN TO MATCH ADJACENT CONDITION AND PREPARE FOR THE RECEPTION OF NEW FINISHES.
02-059	CONTRACTOR SHALL PROTECT, PATCH AND REPAIR ALL EXISTING WORK ADJACENT TO ITS WORK.
02-060	CONTRACTOR SHALL BE RESPONSIBLE FOR ALL CUT AND PATCHING MADE NECESSARY BY THE WORK OF ALL TRADES INVOLVED IN THE REMODELING.
02-061	ANY ELECTRICAL, PLUMBING AND MECHANICAL DEMOLITION TO BE DONE BY QUALIFIED CONTRACTORS IN EACH SPECIFIC TRADE. COORDINATE WITH MECHANICAL, ELECTRICAL, AND PLUMBING DRAWINGS.
02-062	BUILDING WILL NOT BE OCCUPIED DURING DEMOLITION AND/OR NEW CONSTRUCTION.
02-063	IT SHALL BE THE RESPONSIBILITY OF THE GENERAL CONTRACTOR TO KEEP ALL STRUCTURAL ELEMENTS IN A SAFE AND SOUND CONDITION DURING ALL STAGES OF DEMOLITION AND CONSTRUCTION, SO AS TO PREVENT ANY UNNECESSARILY DAMAGE OR ADDITIONAL WORK OR REPAIRS.
02-100	
03-000	CONCRETE
03-001	REFER TO STRUCT. DWGS. FOR ADDITIONAL INFORMATION REGARDING CONCRETE ELEMENTS, ETC.
03-011	CONCRETE SLAB, REFER TO STRUCT. DWGS. FOR SPECS, DETAILS, ETC.
03-012	CONCRETE FOOTING REFER TO STRUCT. DWGS. FOR SPECS, DETAIUL, ETC.
03-013	CONCRETE SALB THICKENED EDGE, REFER TO STRUCT. DWGS. FOR SPECS.
03-020	CONCRETE BEAM, REFER TO STRUCT. DWGS. FOR SPECS.
03-022	CONCRETE SILL BEAM, REFER TO STRUCT. DWGS. FOR SPECS.
03-050	EXISTING CONCRETE SLAB, TO REMAIN. REFER TO STRUCT. DWGS. FOR ADDITIONAL INFORMATION, SPECS, DETAILS, ETC.
03-055	EXISTING CONCRETE FOUNDATION, TO REMAIN. REFER TO STRUCT. DWGS. FOR ADDITIONAL INFORMATION, SPECS, DETAILS, ETC.
03-060	EXISTING CONCRETE BEAM / TIE BEAM, TO REMAIN. REFER TO STRUCT. DWGS. FOR ADDITIONAL INFORMATION, SPECS, DETAILS, ETC.
03-061	EXISTING SILL BEAM, TO REMAIN. REFER TO STRUCT. DWGS. FOR ADDITIONAL INFORMATION, SPECS, DETAILS, ETC.
03-062	EXISTING CONCRETE COLUMN TO REMAIN. REFER TO STRUCT. DWGS. FOR ADDITIONAL INFORMATION, SPECS, DETAILS, ETC.
03-100	
04-000	MASONRY
04-001	REFER TO STRUCT. DWGS. FOR CMU SPECIFICATIONS, REQUIREMENTS, DETAILS, REINFORCEMENT, ETC.
04-010	CMU WALL REFER TO STRUCT. DWGS. FOR SPECS.
04-020	EXISTING CMU WALL, TO REMAIN. REFER TO DEMOLITION DRAWINGS FOR AREAS OR PORTIONS OF WALL TO BE REMOVED (DASHED LINES INDICATE THE PORTION OF EXISTING CMU WALL TO BE REMOVED TO CREATE NEW OPENINGS), IF ANY. ALSO REFER TO STRUCT. DWGS. FOR ADDITIONAL INFORMATION AND SPECS.
04-100	
05-000	METALS AND STRUCTURAL STEEL
05-001	GENERAL CONTRACTOR SHALL COORDINATE THICKNESS OF PARTITIONS TO ACCOMMODATE MECHANICAL, PLUMBING, AND ELECTRICAL WORK. DIMENSIONS SHOWN ON PLANS ARE NOMINAL.
05-020	STRUCTURAL STEEL: COLUMNS, BEAMS, CHANNELS, JOISTS, FLANGES, ANGLES, ETC. REFER TO STRUCTURAL DWGS. FOR SPECIFICATIONS AND ADDITIONAL INFORMATION.
05-065	METAL STUD FRAMING FOR CEILING @ 16" c/c MAX. SPACING. PROVIDE VERTICAL SUPPORT CONNECTED TO OVERHEAD JOISTS OR DECK @ 4'-0" MAX. SPACING, TYP.
05-080	METAL STRAPS & CONNECTORS, REFER TO STRUCT. DWGS. FOR SPECS.
05-100	
06-000	WOOD AND PLASTICS
06-001	REFER TO STRUCTTURAL DWGS. FOR ADDITIONAL INFORMATION AND SPECIFICATIONS REGARDING WOOD ELEMENTS AND MATERIAL.
06-002	ALL WOOD MEMBERS, PLYWOOD SHEATHING, ETC. IN CONTACT WITH CONCRETE OR STEEL SHALL BE P.T. / CDX WOOD / SHEATHING.
06-011	1x4 P.T. WOOD HORIZONTAL FIRE STOPPING CONT. @ 8'-0" c/c MAX. SPACING AND SHALL ALSO BE PROVIDED AROUND ALL OPENINGS.
06-012	P.T. WOOD LEDGER, REFER TO STRUCT. DWGS. FOR SPECS.
06-029	WOOD FASCIA & NAILER, REFER TO DETAILS AND STRUCT. DWGS. FOR NAILING, SPECS, ETC.
06-040	WOOD FRAMING, REFER TO STRUCTURAL DWGS. FOR ADDITIONAL SPECIFICATION, SPACING, CONNECTIONS, ETC.
06-070	PLYWOOD SHEATHING DECK / WALLS / SOFFITS, REFFER TO STRUCT. DWGS. FOR SPEC. NAILING, ETC.
06-075	EXISTING PLYWOOD SHEATHING ROOF DECK, TO REMAIN. REFER TO STRUCT. DWGS. FOR ADDITIONAL INFORMATION, SPECS, DETAILS, ETC.
06-091	EXISTING WOOD STRUCTURAL FRAMING TO REMAIN AND NOT ALTERED, TYP.
06-100	
07-000	THERMAL AND MOISTURE PROTECTION
07-004	BUILDING ENVELOPE: THE INTENT AND PERFORMANCE OBJECTIVE OF THESE DRAWINGS IS TO PROVIDE A BUILDING ENVELOPE THAT PREVENTS WATER / MOISTURE INTRUSION INTO THE BUILDING. ALL WORK PERFORMED SHALL BE DONE IN A MANNER TO ACHIEVE THESE PERFORMANCE STANDARD TO THE MINIMUM PRESCRIBED BUILDING CODE REQUIREMENTS AND INDUSTRY STANDARDS. ALL PENETRATIONS THRU THE BUILDING ENVELOPE SHALL BE SEALED, FLASHED, PROTECTED, ETC. AS TO PREVENT WATER / MOISTURE INTRUSION INTO THE BUILDING. GENERAL CONTRACTOR SHALL PROVIDE THE OWNER WITH ALL WARRANTIES, CERTIFICATIONS, ETC. FOR THE BUILDING ENVELOPE COMPONENTS & SYSTEMS.
07-010	ROOFING SYSTEM, (STANDING SEAM METAL ROOF) ON ROOF DECK (REFER TO STRUCT. DWGS.) ROOFING SYSTEM SHALL BE UNDER A SEPARATE PERMIT. CONTRACTOR SHALL SUBMIT SHOP DRAWINGS, SPECS, DETAILS, NOAs, ETC. AND SUBMIT TO THE ARCH/ENG OF RECORD FOR APPROVAL.
07-035	GALVANIZED STEEL DRIP EDGE, CONT. TYP. ANCHORED TO DECK @ 6" c/c.
07-040	6 MIL MIN. VAPOR BARRIER.
07-050	IN-FURRING CAVITY INSULATION. R-5 MIN. RIGID BOARD OR ALUMINUM FOIL.
07-051	AIR-IMPERMIABLE SPRAY FOAM INSULATION. APPLY TO THE UNDERSIADE OF ROOF DECK AND SIDE OF WALLS ABOVE CEILING. R-19 MIN. VALUE. INSULATION APPLICATION SHALL COMPLY WITH FBC 2020 7th EDITION RESIDENTIAL SECTION R806.5 AND SECTION R316. ALL INSULATION MATERIAL TO HAVE A FLAME SPREAD INDEX OF NOT MORE THAN 25 AND A SMOKE-DEVELOPED INDEX OF NOT MORE THAN 450, AS PER FBC 2020 BUILDING SECTION 720.2.
07-052	PROVIDE R-30 ATTIC INSULATION IN ATTIC SPACE, TYP.
07-060	4" CONT. VENTILATION STRIP. SHALL BE PROVIDED WITH NON-CORROSIVE INSECT SCREEN WITH 1/6" MIN. & 1/4" MAX. SCREEN SIZE.
07-100	
08-000	DOORS, WINDOWS AND STORE FRONTS
08-001	GENERAL CONTRACTOR SHALL PROVIDE CONTINUOUS CAULK AND SEALANT AROUND ALL EXTERIOR OPENINGS TO PREVENT WATER PENETRATION AND AIR LEAKAGE IN ACCORDANCE WITH THE FLORIDA BUILDING CODE (LATEST APPLICABLE EDITION).
08-002	ALL DOORS AND WINDOWS SHALL BE APPROVED BY THE OWNER / ARCH / ENG THRU A PROCESS OF SHOP DRAWINGS SUBMITTAL BEFORE ANY MANUFACTURING CAN TAKE PLACE.
08-003	GENERAL CONTRACTOR SHALL COORDINATE THE ROUGH OPENING SIZES WITH THE DOOR / WINDOW MANUFACTURER. CONTRACTOR SHALL VERIFY ALL DIMENSIONS AND ROUGH OPENINGS ON THE FIELD PRIOR TO ORDERING AND MANUFACTURING.
08-004	ALL INTERIOR DOORS SHALL BE STAIN-READY FINISHED OR PRIMED.
08-005	ALL GLAZING FOR EXTERIOR DOORS AND WINDOWS SHALL BE IMPACT RESISTANT, OR STORM SHUTTERS SHALL BE PROVIDED FOR ALL FENESTRATION THAT IS NOT IMPACT RESISTANT. STORM SHUTTERS SHALL BE UNDER A SEPARATE PERMIT. CONTRACTOR SHALL SUBMIT SHOP DRAWINGS, DETAILS, SPECS, NOAs, PRODUCT APPROVALS, ETC. AND SUBMIT FOR APPROVAL.
08-006	EXTERIOR DOORS AND WINDOWS SHALL BE UNDER A SEPARATE PERMIT. GC SHALL PROVIDE SHOP DRAWINGS, SPECS, DETAILS, CALCULATIONS, NOAs, ETC. AND SUBMIT TO ARCHITECT / ENGINEER OF RECORD FOR APPROVAL.
08-007	DETAILS SHOWN ON THIS SET ARE TYPICAL. APPROVED WINDOW AND DOORS SYSTEM MAY REQUIRE DIFFERENT AND/OR ADDITIONAL DETAILS TO DESCRIBE SYSTEM CONDITIONS. CONTRACTOR SHALL PROVIDE ALL NECESSARY DETAILS, SPECS, ETC. FOR THE SELECTED WINDOWS AND DOORS. THIS INFORMATION SHALL BE SUBMITTED TO THE ARCHITECT/ENGINEER FOR APPROVAL.
08-008	ALL EXTERIOR DOORS SHALL BE PROVIDED WITH THRESHOLDS AND WEATHER STRIPPING TYP.

Keynote Legend & General Notes

Key Value	Keynote Text
08-009	ALL EXTERIOR DOORS, STORE FRONTS, AND WINDOWS SHALL BE TESTED (AS PER MANUFACTURER SPECIFICATIONS AND / OR INDUSTRY STANDARDS) FOR WATER INTRUSION. ALL EXTERIOR FENESTRATION SHALL BE WATER, HUMIDITY TIGHT TYP.
08-010	ALL INTERIOR DOORS SHALL BE STAIN-READY FINISHED OR PRE-PAINTED AND PROVIDED WITH DOOR STOP HARDWARE, AS REQUIRED.
08-100	
09-000	FINISHES
09-001	GENERAL BATHROOM FINISH SCHEDULE:1-)FLOOR: -BATHROOM:IMPERVIOUS TILE & MORTAR. -SHOWER: IMPERVIOUS, SLIP RESISTANT TILE & GROUT, OR NON-ABSORBENT SURFACE. 2)WALLS:-BATHROOM: MOISTURE / MILDEW RESISTANT PAINT ON MOISTURE RESISTANT DRYWALL (GREEN BOARD) AND/OR IMPERVIOUS TILE & GROUT ON CEMENT BOARD BACKER. -SHOWER/TUB: IMPERVIOUS TILE & GROUT, OR NON-ABSORBENT SURFACE FROM FLOOR TO CEILING OR TO A MIN. OF 72" ABOVE DRAIN, ON CEMENT BACKER. 3-)CEILING: MOISTURE / MILDEW RESISTANT PAINT ON MOISTURE RESISTANT DRYWALL (GREEN BOARD). NOTE: FIBER CEMENT, FIBER-MAT REINFORCED CEMENT, GLASS MAT GYPSUM BACKERS ANDFIBER-REINFORCED CEMENT BACKERS SHALL BE USED AS BACKERS FOR WALL TILE IN TUB AND SHOWER AREAS AND WALL PANELS IN SHOWER AREAS.
09-019	THIN NATURAL STONE VENEER / PORCELAIN TILE DECORATIVE WALL CLADDING, ON FULL BED SETTING / BONDING MIX, ON CMU / CONCRETE WALLS. PROVIDE FULL COVERAGE WITH BONDING AGENT TO ALL AREAS OF WALLS AND CONCRETE ELEMENTS TO RECEIVE STONE / TILE CLADDING. BEFORE STONE VENEER / TILE APPLICATION, APPLY BONDING AGENT TO ALL EXPOSED CONCRETE AREAS. TYP.
09-020	CERAMIC TILE FLOOR FINISH TO BE SELECTED BY OWNER, AT UPPER FLOORS ABOVE LIVING SPACES, PROVIDE UNDER TILE SOUND INSULATION MEMBRANE. ALL TILE INSTALLATION SHALL BE ON CONCRETE SLAB OR 1/2" MIN. CEMENT BACKER, TYP.
09-021	CERAMIC TILE FLOOR FINISH FOR OUTSIDE TERRACE. SHALL BE SLIP RESISTANT. TO BE SELECTED BY OWNER, TYP.
09-023	EXPOSED CONCRETE FINISH (STEEL TROWEL FINISH) W/ EPOXY PAINT FINISH. COLOR TO BE SELECTED BY OWNER, TYP.
09-030	5/8" MIN. THICK SMOOTH STUCCO FINISH, PAINTED. 3-COAT APPLICATION. PROVIDE CONTROL AND EXPANSION JOINTS AS NECESSARY TO AVOID CRACKING, AND AS PER INDUSTRY STANDARDS AND MINIMUM CODE REQUIREMENTS. PROVIDE BONDING AGENT TO ALL EXPOSED CONCRETE TO RECEIVE STUCCO FINISH.
09-040	1/2" GYPSUM WALL BOARD FINISH, PAINTED, ON FURRING STRIP / FRAMING STUDS.
09-044	PROVIDE IMPERVIOUS TILE & GROUT WALL FINISH AT SHOWERS FROM FLOOR TO CEILING OR TO A MINIMUM OF 72" ABOVE SHOWER FLOOR. PROVIDE 1/2" CEMENT BOARD SUBSTRATE FOR ALL WALL TILE INSTALLATION, TYP. FOR OPTIONAL POOL BATHROOM, PROVIDE TILE APPLICATION ON ALL WALLS, AND FROM FLOOR TO CEILING.
09-050	5/8" MIN. GYPSUM WALL BOARD CEILING FINISH, PAINTED, ON FURRING STRIPS, ON ROOF TRUSSES / FRAMING.
09-100	
10-000	SPECIALTY CONSTRUCTION
10-005	KITCHEN CABINETS AND COUNTER TOPS. TO BE SELECTED AND APPROVED BY OWNER / ID. MANUFACTURER SHALL PROVIDE SHOP DRAWINGS, DESIGN, SPECS, DETAILS, ETC. AND PROVIDE TO OWNER / ARCH. FOR APPROVAL PRIOR TO ORDERING, FABRICATION, OR INSTALLATION.
10-010	BATHROOM CABINETS, VANITIES, & COUNTER TOPS. TO BE SELECTED AND APPROVED BY OWNER. MANUFACTURER SHALL PROVIDE SHOP DRAWINGS, DESIGN, SPECS, DETAILS, ETC. AND PROVIDE TO OWNER / ARCH. FOR APPROVAL PRIOR TO ORDERING, FABRICATION, OR INSTALLATION.
10-012	CARPENTRY, MILLWORK, CABINETRY, TRIM, ETC. TO BE SELECTED AND APPROVED BY OWNER / ID. MANUFACTURER SHALL PROVIDE SHOP DRAWINGS, DESIGN, SPECS, DETAILS, ETC. AND PROVIDE TO OWNER / ARCH. FOR APPROVAL PRIOR TO ORDERING, FABRICATION, OR INSTALLATION.
10-013	CABINETS AND COUNTER TOPS. TO BE SELECTED AND APPROVED BY OWNER / ID. MANUFACTURER SHALL PROVIDE SHOP DRAWINGS, DESIGN, SPECS, DETAILS, ETC. AND PROVIDE TO OWNER / ARCH. FOR APPROVAL PRIOR TO ORDERING, FABRICATION, OR INSTALLATION.
10-030	CLOSET RACKS, SHELVES, ETC. TO BE SELECTED BY OWNER / ID, TYP.
10-040	GLASS SHOWER ENCLOSURE. PROVIDE CATEGORY II SAFETY GLASS SHOWER ENCLOSURE WITH 22" MINIMUM CLEAR OPENING DOOR.
10-057	EXISTING POOL SAFETY BARRIER FENCE / MESH. SHALL COMPLY WITH FBC RESIDENTIAL SECTION R4501.17.1 AND SECTION R4501.17.1.15.
10-100	
11-000	EQUIPMENT
11-001	REFER TO EACH TRADE FOR SPECIFICATION AND INFORMATION REGARDING EQUIPMENT, APPIANCES, ETC.
11-002	ALL EQUIPMENT, APPLIANCES, ETC. SHALL BE SELECTED AND APPROVED BY OWNER.
11-021	GAS POWERED STOVE & OVEN, TO BE SELECTED BY OWNER. REFER TO E/M/P DWGS. FOR ADDITIONAL INFORMATION.
11-030	EXHAUST HOOD, TO BE SELECTED BY OWNER. REFER TO E/M/P DWGS. FOR ADDITIONAL INFORMATION.
11-100	
12-000	FURNISHINGS
12-001	ALL FURNISHINGS, ETC. SHALL BE SELECTED AND APPROVED BY OWNER / ID.
12-100	
13-000	CONVEYING SYSTEMS
13-100	
14-000	MECHANICAL
14-001	REFER TO MECHANICAL DWGS. FOR ADDITIONAL INFORMATION, SPECS, CALCULATIONS, REGARDING MECHANICAL EQUIPMENT & FIXTURES.
14-002	EXISTING MECHANICAL EQUIPMENT TO REMAIN AND NOT ALTERED, TYP.
14-006	MECHANICAL EQUIPMENT AHU, REFER TO MECH. DWGS. FOR SPECS.
14-100	
15-000	ELECTRICAL
15-001	REFER TO ELECTRICAL DWGS. FOR ADDITIONAL INFORMATION, SPECS, CALCULATIONS, REGARDING ELECTRICAL EQUIPMENT & FIXTURES.
15-002	ALL ELECTRICAL FIXTURES, ACCESSORIES, APPLIANCES, FINISHES, ETC. SHALL BE SELECTED AND APPROVED BY OWNER BEFORE ORDERING, MANUFACTURING, FABRICATION, OR INSTALLATION.
15-100	
16-000	PLUMBING
16-001	REFER TO PLUMBING DWGS. FOR ADDITIONAL INFORMATION, SPECS, CALCULATIONS, REGARDING ELECTRICAL EQUIPMENT & FIXTURES.
16-002	ALL PLUMBING ACCESSORIES, FIXTURES, ETC. TO BE APPROVED BY OWNER / ID BEFORE ORDERING, MANUFACTURING, OR INSTALLATION, TYP.
16-003	PLUMBING EQUIPMENT, FIXTURES, ACCESSORIES, ETC. REFER TO PLUMBING DWGS. FOR ADDITIONAL SPECS, INFORMATION, DETAILS, ETC.
16-005	BATHROOM VANITY SINK, TO BE SELECTED AND APPROVED BY OWNER. ALSO REFER TO PLUMBING DWGS. FOR ADDITIONAL SPECS.
16-010	TOILET, TO BE SELECTED AND APPROVED BY OWNER. ALSO REFER TO PLUMBING DWGS. FOR ADDITIONAL SPECS.
16-015	JACUZZI TUB. TO BE SELECTED AND APPROVED BY OWNER. ALSO REFER TO PLUMBING DWGS. FOR ADDITIONAL SPECS.
16-018	SHOWER DRAIN, TO BE SELECTED AND APPROVED BY OWNER / ID.
16-032	LAUNDRY SINK, COUNTER TOP MOUNTED. REFER TO M/E/P DWGS. FOR ADDITIONAL INFORMATION. TO BE SELECTED AND APPROVED BY OWNER / ID. TYP.
16-100	
17-000	FIRE SAFETY AND PROTECTION
17-100	
18-000	CIVIL
18-003	REFER TO CIVIL DRAWINGS FOR ADDITIONAL INFORMATION REGARDING SITE GRADING, DRAINAGE, PAVING, RETENTION, CALCULATION, RIGHT-OF-WAY IMPROVEMENTS, ETC.
18-100	
19-000	LANDSCAPE AND IRRIGATION
19-001	NON CYPRESS VARIETY MULCH SHALL EXTEND UNDER ALL TREES, SHRUBS AND GROUND COVER BEDS TO THE CLOSEST HARD EDGE OR SOD BORDER, IN A MINIMUM OF 3" DEPTH.
19-002	ALL PLANTS SHALL MEET THE MINIMUM STANDARD OF FANCY AS SPECIFIED IN GRADE AND STANDARDS FOR NURSERY PLANTS AS PUBLISHED BY THE DIVISION OF PLANT INDUSTRY, FLORIDA DEPARTMENT OF AGRICULTURE, LATEST EDITION.
19-003	ALL SHRUBS TO BE PLANTED A MINIMUM OF 24", AND GROUND COVERS A MINIMUM OF 12" FROM THE EDGE OF WALKS, BUILDING WALLS, POND'S EDGE, ETC... IXORA NORA GRANT AND RAPHIOLEPSIS INDICA TO BE PLANTED 30" FROM EDGE OF WALKWAYS.
19-004	ALL TREES AND PALMS OVER 8' IN HEIGHT SHALL BE BRACED TO PREVENT LATERAL MOVEMENT FOR A PERIOD OF SIX MONTHS FROM THE DATE OF PLANTING. EITHER WOOD BRACES AS SHOWN IN THE PLANTING DETAIL, OR THE WIRE AND TURNBUCKLE METHOD SHALL BE USED. NO NAILS, SCREWS, METAL STRAPS OR WIRES ARE TO BE USED DIRECTLY AGAINST THE TREES OR PALMS TRUNKS.
19-005	ALL PALMS EXCEPT FOR SPECIES SUCH AS COCOS, ACOELORRAPHE, RAPHIS, AND OTHER MULTITRUNK PALMS, SHALL HAVE STRAIGHT TRUNKS. ALL PALMS TRUNKS SHALL BE FREE OF SCARS, DECAY OR ANY DAMAGE CAUSED BY DIGGING, TRANSPORT OR PLANTING HANDLING OF THE SAME.
19-006	ALL WORK BY THE LANDSCAPE CONTRACTOR SHALL BE PERFORMED IN A PROFESSIONAL AND SOUND MANNER IN ACCORDANCE WITH ESTABLISHED STANDARDS OF LANDSCAPE INSTALLATION PRACTICES AND WORKMANSHIP.
19-007	LANDSCAPE CONTRACTOR IS RESPONSIBLE FOR VERIFYING PLANT QUANTITIES PRIOR TO BIDDING. QUANTITIES SHOWN IN THE PLANS MAY VARY DUE TO ACTUAL SITE SCALE, JOB CONDITIONS ETC... LANDSCAPE ARCHITECT ASSUMES NO RESPONSIBILITY FOR THE ACTUAL PLANT COUNT NECESSARY FOR THE SUCCESSFUL COMPLETION OF THE WORK.
19-008	LANDSCAPE CONTRACTOR AND HIS SUBCONTRACTORS SHALL BE LICENSED AND INSURED AS REQUIRED BY THE MUNICIPALITY, COUNTY, STATE OR ANY OTHER GOVERNMENTAL AGENCY REQUIRING A LICENSE OR INSURANCE IN ORDER FOR THE LANDSCAPE CONTRACTOR TO PERFORM HIS WORK.
19-009	ALL WORK SHALL CONFORM TO THE CITY OF MIAMI LANDSCAPE ORDINANCE AND ANY OTHER MUNICIPAL LANDSCAPE ORDINANCE IN EFFECT AT THE PROJECT'S LOCATION.
19-010	LANDSCAPE CONTRACTOR IS REQUIRED TO PROCURE AND OBTAIN ANY NECESSARY PERMITS APPLICABLE FOR THE SUCCESSFUL COMPLETION OF THIS PROJECT, IF APPLICABLE.
19-011	LANDSCAPE MATERIAL SHALL NOT BE ALLOWED TO GROW IN SUCH A MANNER AS TO IMPEDE STREET FRONT TRIANGLE OF VISIBILITY TO PROPERTY OWNER OR NEIGHBORS, SO AS TO MATERIALLY IMPEDE VISION BETWEEN A HEIGHT OF 3 FEET AND 8 FEET.
19-012	LANDSCAPE CONTRACTOR SHALL CALL SUNSHINE STATE ONE CALL CENTER OF FLORIDA AT 1-800-432-4770 (TOLL FREE) 48 HOURS BEFORE DIGGING.
19-013	LANDSCAPE CONTRACTOR IS RESPONSIBLE FOR INSPECTING THE SITE AND PHYSICALLY OBSERVING ALL THE SITE CONDITIONS PRIOR TO ENTERING INTO AGREEMENT OR CONTRACT WITH OWNER. LANDSCAPE CONTRACTOR SHALL COORDINATE HIS WORK WITH THE GENERAL CONTRACTOR OR CONSTRUCTION MANAGER IN SUCH A MANNER AS TO ALLOW FOR A SPEEDY AND ORDERLY COMPLETION OF ALL WORK ON THE SITE.
19-014	ANY EXCESS SOIL, LANDSCAPE MATERIALS AND DEBRIS FROM THE LANDSCAPE CONTRACTOR'S WORK SHALL BE REMOVED FROM THE SITE IMMEDIATELY UPON COMPLETION OF HIS WORKS.
19-015	LANDSCAPE IRRIGATION SHALL BE UNDER A SEPARATE PERMIT. CONTRACTOR SHALL SUBMIT SHOP DRAWINGS, CALCULATIONS, SPECS, ETC.
19-100	

Keynote Legend & General Notes

Key Value	Keynote Text

NOVUS Archetype
architecture / interior / planning

NOVUS Archetype, LLC
12721 SW 30th ST. MIAMI, FL 33175
PH: (305) 505-6910
email: julio@novusarchetype.com
AA26001460
Qualifier: Julio Pulido, AIA
License #: AR93904
Qualifier : Salvador Ben Mitrani, NCARB
License # : AR99606

STATE OF FLORIDA
JULIO PULIDO
AR93904
REGISTERED ARCHITECT

Julio Pulido
Digitally signed by Julio Pulido
Date: 2024.12.20 12:23:57 -05'00'

Dylan & Jamie Roy

Interior Remodeling & Addition

6783 SW 104th St Pincrest, Fl 33156

No.	Description	Date

Project number	24-011
Date	07-10-24
Drawn by	JP
Checked by	JP

SHEET TITLE

Legends, Symbols, & Keynotes

SHEET No.

A130

Miami Dade County Department of Regulatory and Economic Resources - Job Copy
2025008506 - 5/19/2025 11:05:46 AM
A130.pdf

Existing Wall Legend
1/2" = 1'-0"

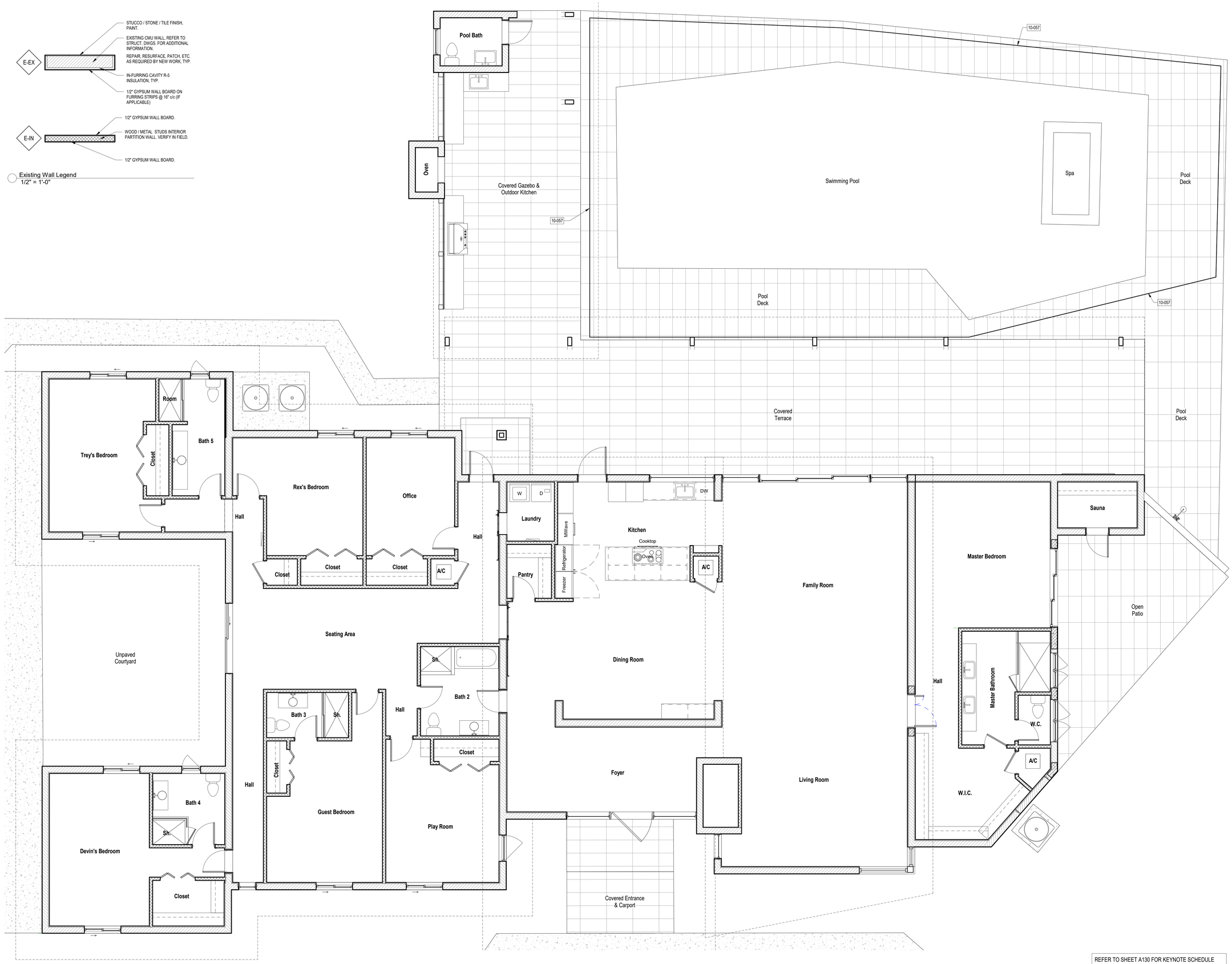

1 Existing House Floor Plan
1/4" = 1'-0"

REFER TO SHEET A130 FOR KEYNOTE SCHEDULE FOR FLOOR PLANS.

NOVUS Archetype
architecture / interior / planning

NOVUS Archetype, LLC
12721 SW 30th ST. MIAMI, FL 33175
PH: (305) 505-6910
email: julio@novusarchetype.com
AA26001460
Qualifier: Julio Pulido, AIA
License #: AR93904
Qualifier : Salvador Ben Mitrani, NCARB
License # : AR99606

STATE OF FLORIDA
JULIO PULIDO
AR93904
REGISTERED ARCHITECT

Julio Pulido
Digitally signed by Julio Pulido
Date: 2024.12.20 12:24:44 -05'00'

Dylan & Jamie Roy

Interior Remodeling & Addition

6783 SW 104th St Pincrest, Fl 33156

No.	Description	Date

Project number	24-011
Date	07-10-24
Drawn by	JP
Checked by	JP

SHEET TITLE

Existing Residence Floor Plan

SHEET No.

A200

Miami Dade County Department of Regulatory and Economic Resources - Job Copy
2025008506 - 5/19/2025 11:05:46 AM
A200.pdf
Examiner Date Time Stamp Trade Stamp Name
TOLEDO, GABRIEL 4/14/2025 9:39:27 AM HRS Approved

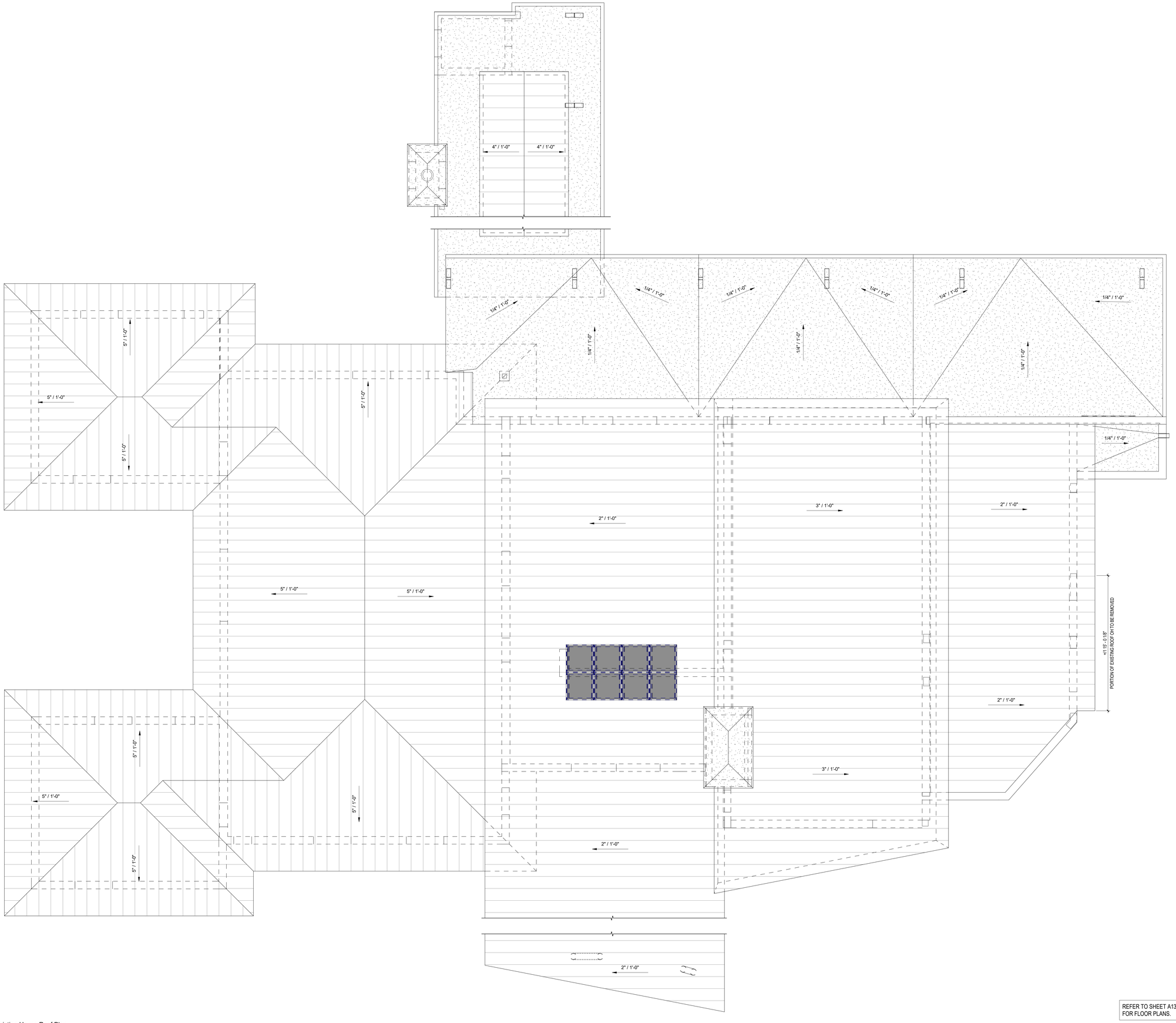

1 Existing House Roof Plan
1/4" = 1'-0"

REFER TO SHEET A130FOR KEYNOTE SCHEDULE FOR FLOOR PLANS.

NOVUS Archetype
architecture / interior / planning

NOVUS Archetype, LLC
12721 SW 30th ST. MIAMI, FL 33175
PH: (305) 505-6910
email: julio@novusarchetype.com
AA26001460
Qualifier: Julio Pulido, AIA
License #: AR93904
Qualifier : Salvador Ben Mitrani, NCARB
License # : AR99606

STATE OF FLORIDA
JULIO PULIDO
AR93904
REGISTERED ARCHITECT

Julio Pulido
Digitally signed by Julio Pulido
Date: 2024.12.20 12:25:25 -05'00'

Dylan & Jamie Roy

Interior Remodeling & Addition

6783 SW 104th St Pincrest, Fl 33156

No.	Description	Date

Project number	24-011
Date	07-10-24
Drawn by	JP
Checked by	JP

SHEET TITLE

Existing Residence Roof Plan

SHEET No.

A205

Miami Dade County Department of Regulatory and Economic Resources - Job Copy
2025008506 - 5/19/2025 11:05:46 AM
A205.pdf

DASHED LINES INDICATES COMPONENTS AND ELEMENTS TO BE DEMOLISHED, REMOVED, OR RELOCATED.

SOLID, LIGHT LINES INDICATE COMPONENTS AND ELEMENTS THAT ARE TO REMAIN.

Demolition Wall Legend
1/2" = 1'-0"

Demolition Keynote Legend (02-000 Series)	
Key Value	Keynote Text
02-000	SITE WORK AND DEMOLITION.
02-001	GENERAL CONTRACTOR SHALL VERIFY WITH ALL UTILITY COMPANIES THE LOCATION OF ALL EXISTING ABOVE AND BELOW GROUND UTILITIES (GAS, ELECTRIC, PHONE, WATER, SEWER, ETC.) AND STAKE OUT IN THE FIELD ALL UTILITIES KNOWN AND ENCOUNTERED PRIOR TO PROCEEDING WITH ANY DEMOLITION / EXCAVATION WORK. OWNER SHALL NOT AUTHORIZE ANY IMPROVEMENTS AND/OR DEMOLITION WORK UNTIL PERMIT IS SECURED FROM AGENCIES HAVING JURISDICTION.
02-002	REFER TO STRUCTURAL DWGS. AND / OR GEOTECHNICAL REPORTS AND STUDIES FOR SOIL REMOVAL, FILL, COMPACTION SPECIFICATIONS, AND ALL OTHER INFORMATION REGARDING SITE PREPARATION, CUTFILL, ETC.
02-009	EXISTING COLUMN TO BE REMOVED.
02-012	EXISTING CONCRETE SLAB TO BE REMOVED.
02-013	EXISTING TILE FLOOR FINISH TO BE REMOVED IN THIS AREAS, TYP.
02-019	PORTIONS OF EXISTING WALLS TO BE REMOVED.
02-036	EXISTING DOOR / WINDOW TO BE REMOVED.
02-045	EXISTING FIXTURES, CABINETS, MILLWORK, COUNTER TOPS, ACCESSORIES, ETC. TO BE REMOVED, TYP.
02-046	EXISTING PLUMBING FIXTURES, CONTROLS, ACCESSORIES, FAUCETS, ETC. TO BE REMOVED AND REPLACED WITH NEW ONES IN THE SAME LOCATION, TYP.
02-047	EXISTING APPLIANCES AND EQUIPMENT TO BE REMOVED. COORDINATE WITH OWNER / OWNER REPRESENTATIVE FOR DISPOSAL, REUSE, AND / OR STORAGE.
02-048	EXISTING EQUIPMENT / COMPONET TO BE REMOVER OR RELOCATED.
02-050	THE DEMOLITION SCOPE OF WORK HAS BEEN GENERALLY INDICATED ON THE DRAWINGS FOR CONTRACTOR'S REFERENCE. IT SHALL BE THE CONTRACTOR'S RESPONSIBILITY TO DETERMINE THE FULL SCOPE OF WORK, EXTENT, NATURE AND MANNER OF DEMOLITION REQUIRED.
02-051	ONLY WORKMEN SKILLED AND KNOWLEDGEABLE IN THEIR RESPECTIVE TRADES SHALL BE EMPLOYED IN THE DEMOLITION WORK.
02-052	CONTRACTOR SHALL TAKE SPECIAL CARE TO DEMOLISH ONLY THAT WORK WHICH IS REQUIRED TO BE DEMOLISHED AND NOT TO DISTURB ANY WORK OR ELEMENTS THAT ARE TO REMAIN. IF IN THE COURSE OF DEMOLITION, CONTRACTOR DESTROYS OR DISTURBS ANY WORK THAT IS TO REMAIN,THEN THE CONTRACTOR, AT ITS OWN EXPENSE, SHALL REPAIR OR REPLACE SUCH WORK AS NECESSARY.
02-053	ANY CUTS, AND PENETRATIONS IN EXISTING WORK REQUIRED TO ACCOMPLISH NEW WORK SHALL BE KEPT TO A MINIMUM.
02-054	ALL DEMOLITION WORK TO BE DONE DURING THOSE HOURS DESIGNATED BY OWNER.
02-055	REMOVE AND DISCARD ALL DEMOLISHED MATERIALS IN A MANNER FULLY APPROVED BY MIAMI DADE COUNTY AND ANY OTHER GOVERNMENT AGENCY HAVING JURISDICTION.
02-056	DO NOT SCALE DRAWINGS.
02-057	CONTRACTOR SHALL VERIFY ALL DIMENSIONS AND JOB CONDITIONS PRIOR TO SUBMITTING BIDS AND SHALL REPORT TO THE OWNER'S REPRESENTATIVE ANY DISCREPANCIES OR OMISSIONS WHICH WOULD INTERFERE WITH THE SATISFACTORY COMPLETION OF THE WORK. ALL BUILDING DEPARTMENT PERMITS SHALL BE OBTAIN BEFORE COMMENCING ANY WORK.
02-058	IN ALL CASES THE CONTRACTOR SHALL PATCH ALL DISTURBED EXISTING STRUCTURE OR ELEMENTS THAT ARE TO REMAIN TO MATCH ADJACENT CONDITION AND PREPARE FOR THE RECEPTION OF NEW FINISHES.
02-059	CONTRACTOR SHALL PROTECT, PATCH AND REPAIR ALL EXISTING WORK ADJACENT TO ITS WORK.
02-060	CONTRACTOR SHALL BE RESPONSIBLE FOR ALL CUT AND PATCHING MADE NECESSARY BY THE WORK OF ALL TRADES INVOLVED IN THE REMODELING.
02-061	ANY ELECTRICAL, PLUMBING AND MECHANICAL DEMOLITION TO BE DONE BY QUALIFIED CONTRACTORS IN EACH SPECIFIC TRADE. COORDINATE WITH MECHANICAL, ELECTRICAL, AND PLUMBING DRAWINGS.
02-062	BUILDING WILL NOT BE OCCUPIED DURING DEMOLITION AND/OR NEW CONSTRUCTION.
02-063	IT SHALL BE THE RESPONSIBILITY OF THE GENERAL CONTRACTOR TO KEEP ALL STRUCTURAL ELEMENTS IN A SAFE AND SOUND CONDITION DURING ALL STAGES OF DEMOLITION AND CONSTRUCTION, SO AS TO PREVENT ANY UNNECESSARILY DAMAGE OR ADDITIONAL WORK OR REPAIRS.
02-100	

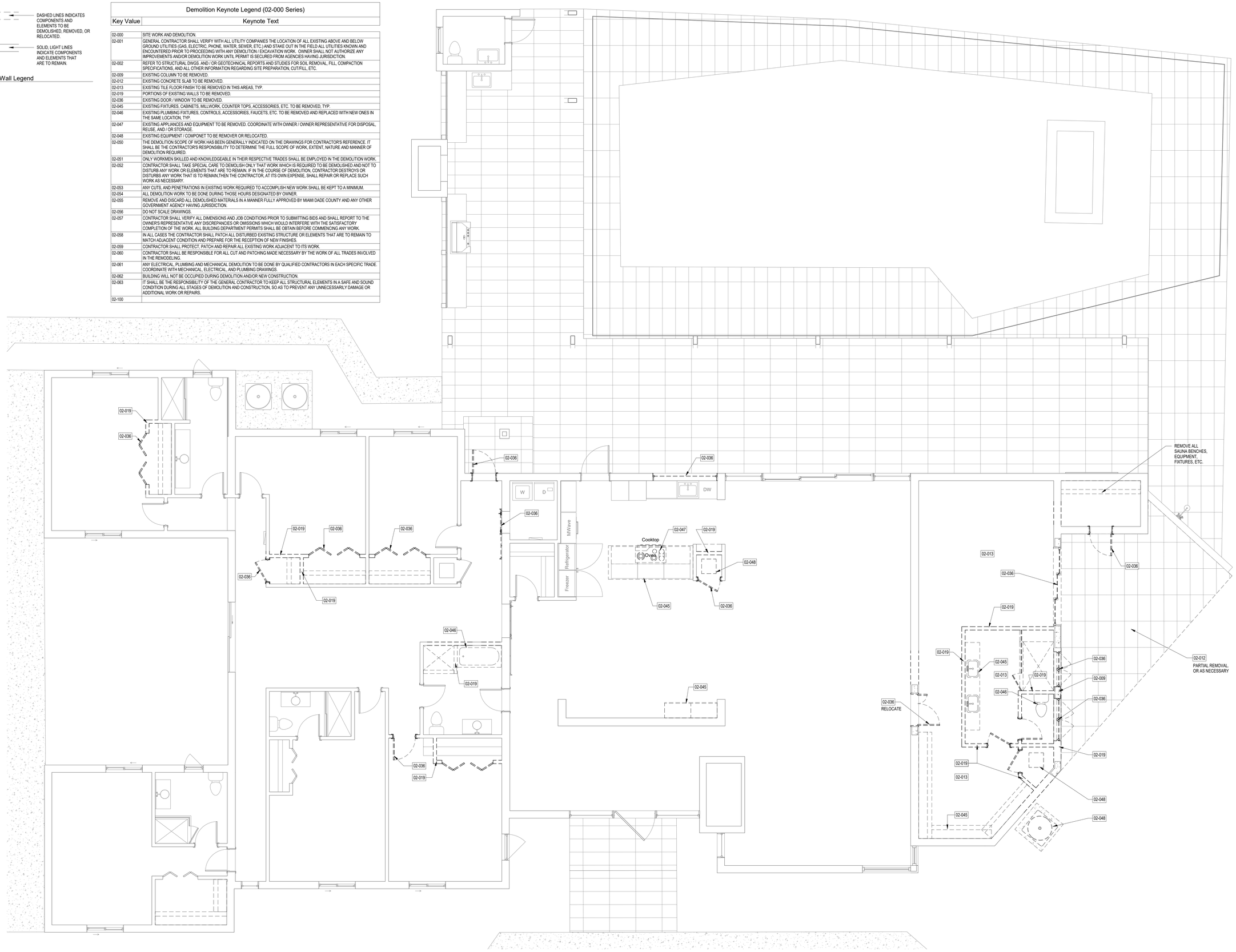

1 Proposed Demolition Floor Plan
1/4" = 1'-0"

NOVUS Archetype
architecture / interior / planning

NOVUS Archetype, LLC
12721 SW 30th ST. MIAMI, FL 33175
PH: (305) 505-6910
email: julio@novusarchetype.com
AA26001460
Qualifier: Julio Pulido, AIA
License #: AR93904
Qualifier : Salvador Ben Mitrani, NCARB
License # : AR99606

STATE OF FLORIDA · JULIO PULIDO · AR93904 · REGISTERED ARCHITECT

Julio Pulido
Digitally signed by Julio Pulido
Date: 2024.12.20 12:26:12 -05'00'

Dylan & Jamie Roy

Interior Remodeling & Addition

6783 SW 104th St Pincrest, Fl 33156

No.	Description	Date

Project number	24-011
Date	07-10-24
Drawn by	JP
Checked by	JP

SHEET TITLE

Proposed Demolition Floor Plan

SHEET No.

A208

Miami Dade County Department of Regulatory and Economic Resources - Job Copy
20250508506 - 5/19/2025 11:05:46 AM
A208.pdf

Existing Wall Legend
1/2" = 1'-0"

GENERAL:
-PROVIDE MOISTURE RESISTANT DRYWALL (GREEN BOARD) AT ALL WET LOCATIONS: BATHROOMS, A/C CLOSETS, LAUNDRY ROOMS, ETC.
-PROVIDE (2) LAYERS OF DRYWALL ON THE INTERIOR SIDES OF ALL A/C CLOSET WALLS. STAGGER JOINTS FOR SOUND ATTENUATION PURPOSES.
-PROVIDE 1/2" CEMENT BOARD AS SUBSTRATE / BACKING FOR ALL WALL / FLOOR TILE INSTALLATION, TYP.
-APPLY REDGUARD LIQUID APPLIED WATERPROOFING AND CRACK PREVENTION MEMBRANE UNDER ALL SHOWER AND BATHROOM WALLS / FLOORS TILE INSTALLATION, TYP.
-PROVIDE R-13 FIBER BATT INSULATION IN WALL STUD CAVITY AT GARAGE-TO-HOUSE SEPARATION WALL.

-LOW VOC STANDARD: SITE APPLIED FINISHES SHALL MEET SPECIFIED VOC EMISSIONS LIMITS IN ACCORDANCE WITH GREEGUARD ENVIRONMENTAL INSTITUTE GGPS.001 STANDARD FOR BUILDING MATERIAL AND FINISHES; OR GREEN SEAL (R) STANDARDS. GC SHALL COLLECT, DOCUMENT AND FILE ALL THE REQUIRED INFORMATION REGARDING FINISHES SPECS AND MATERIALS DATA SHEETS AND PROVIDE AN AFFIDAVIT OF COMPLIANCE WITH THESE REGULATION AT THE TIME OF CO OR TCO.

New Wall Legend
1/2" = 1'-0"

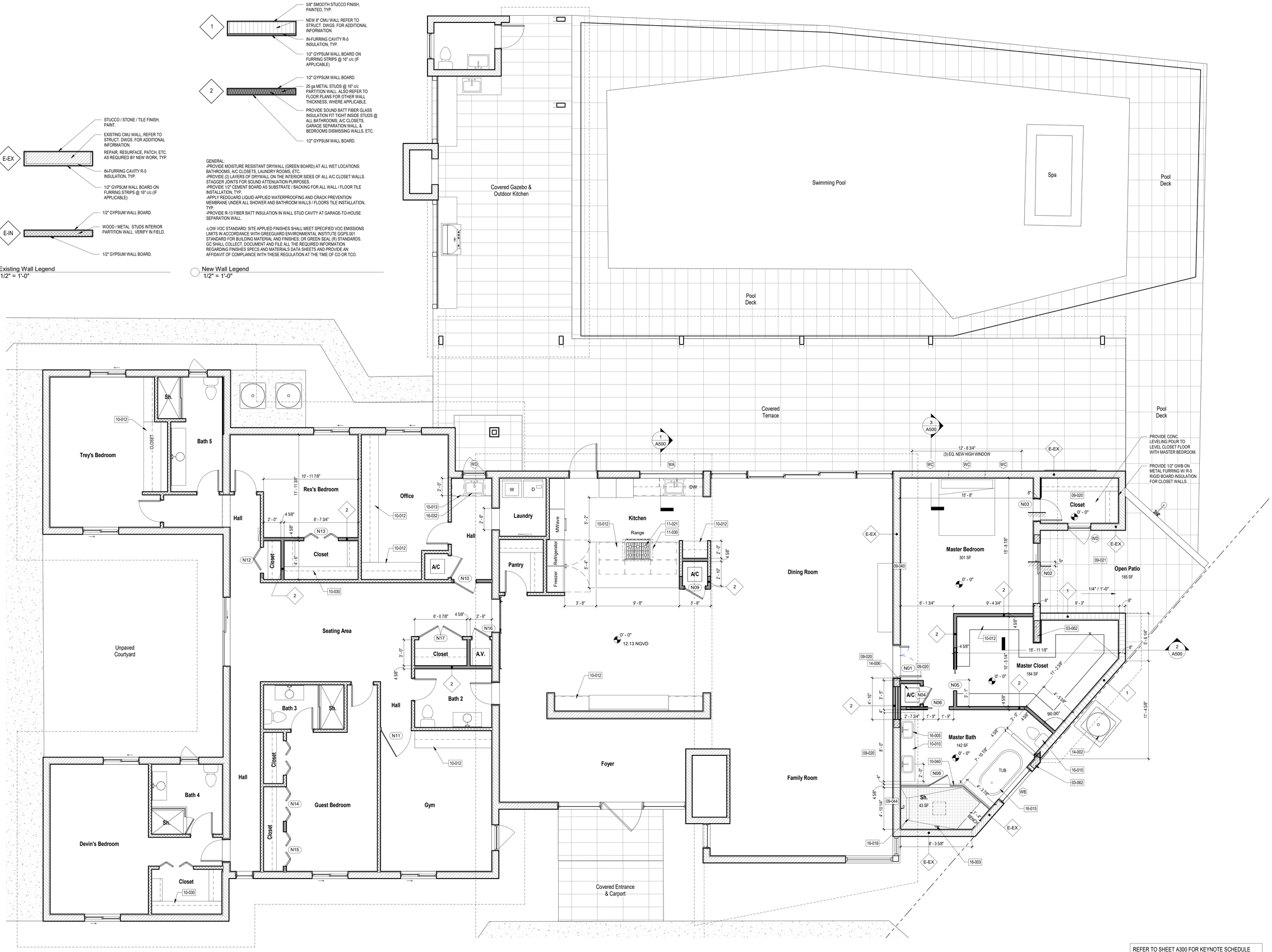

REFER TO SHEET A300 FOR KEYNOTE SCHEDULE FOR FLOOR PLANS & ELEVATIONS.

Proposed Addition & Remodeling Floor Plan
1/4" = 1'-0"

Miami Dade County Department of Regulatory and Economic Resources - Job Copy
2025008506 - 5/19/2025 11:05:46 AM
A210.pdf
Examiner Date Time Stamp Trade Stamp Name
TOLEDO, GABRIEL 4/14/2025 9:40:59 AM HRS Approved

NOVUS Archetype
architecture / interior / planning
NOVUS Archetype, LLC
12721 SW 30th ST. MIAMI, FL 33175
PH: (305) 505-6910
email: julio@novusarchetype.com
AA26001460
Qualifier: Julio Pulido, AIA
License #: AR93904
Qualifier : Salvador Ben Mitrani, NCARB
License # : AR99606

STATE OF FLORIDA
JULIO PULIDO
AR93904
REGISTERED ARCHITECT

Julio Pulido
Digitally signed by Julio Pulido
Date: 2024.12.20 12:27:03 -05'00'

Dylan & Jamie Roy

Interior Remodeling & Addition

6783 SW 104th St Pincrest, Fl 33156

No.	Description	Date

Project number	24-011
Date	07-10-24
Drawn by	JP
Checked by	JP

SHEET TITLE

Proposed Addition& Remodeling Floor Plan

SHEET No.

A210

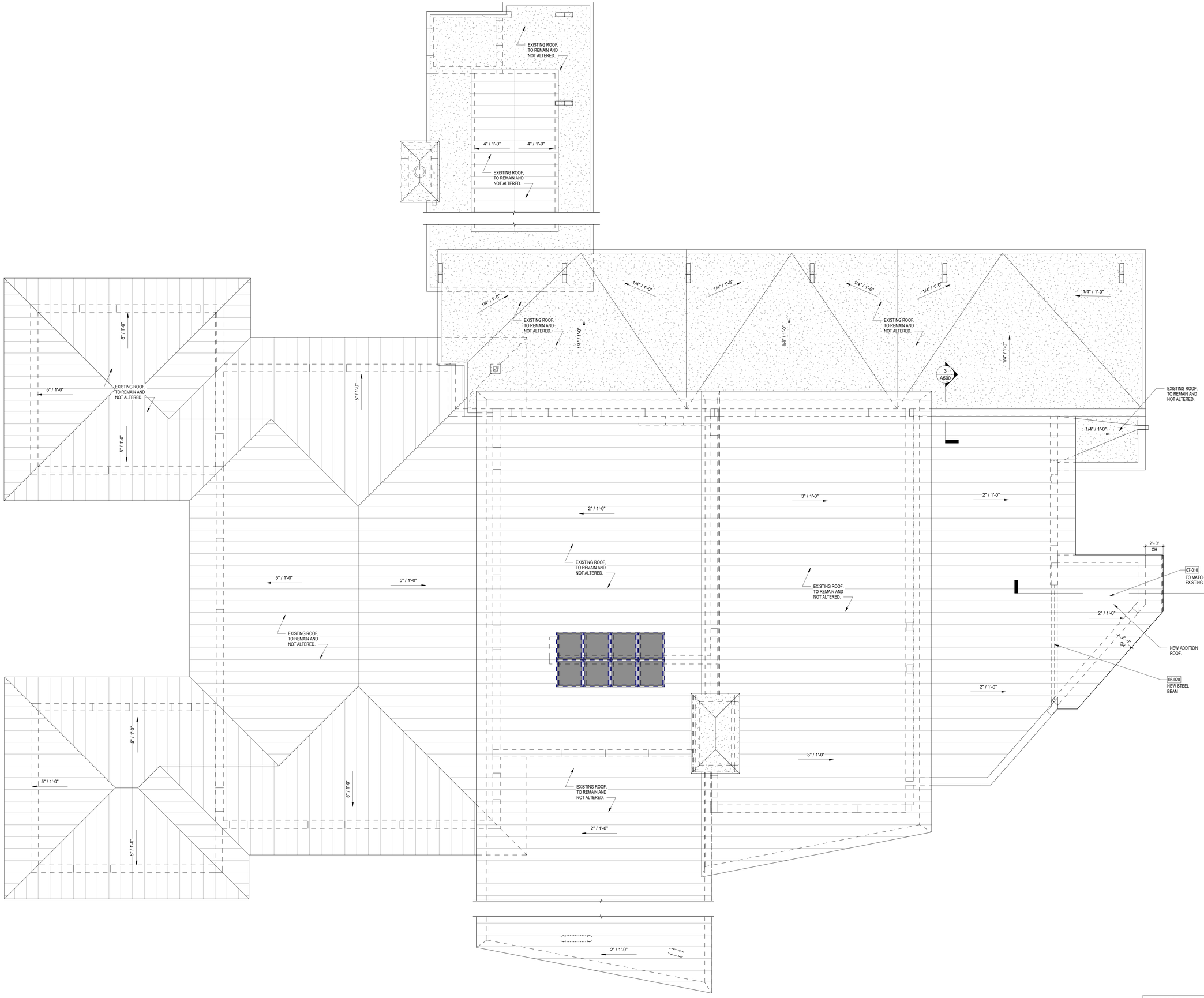

Proposed Addition Roof Plan
1/4" = 1'-0"

REFER TO SHEET A300 FOR KEYNOTE SCHEDULE FOR FLOOR PLANS & ELEVATIONS.

NOVUS Archetype
architecture / interior / planning

NOVUS Archetype, LLC
12721 SW 30th ST. MIAMI, FL 33175
PH: (305) 505-6910
email: julio@novusarchetype.com
AA26001460
Qualifier: Julio Pulido, AIA
License #: AR93904
Qualifier : Salvador Ben Mitrani, NCARB
License # : AR99606

STATE OF FLORIDA
JULIO PULIDO
AR93904
LICENSED ARCHITECT
REGISTERED

Julio Pulido
Digitally signed by Julio Pulido
Date: 2024.12.20 12:27:52 -05'00'

Dylan & Jamie Roy

Interior Remodeling & Addition

6783 SW 104th St Pincrest, Fl 33156

No.	Description	Date

Project number	24-011
Date	07-10-24
Drawn by	JP
Checked by	JP

SHEET TITLE

Proposed Addition& Remodeling Roof Plan

SHEET No.

A215

Miami Dade County Department of Regulatory and Economic Resources - Job Copy
2025008506 - 5/19/2025 11:05:46 AM
A215.pdf

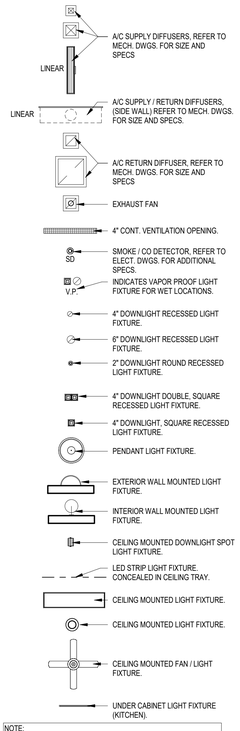

NOTE:
ALL LIGHTING FIXTURES SHALL BE APPROVED BY OWNER BEFORE ORDERING AND / OR INSTALLATION.

RCP Legend & Symbols
1/4" = 1'-0"

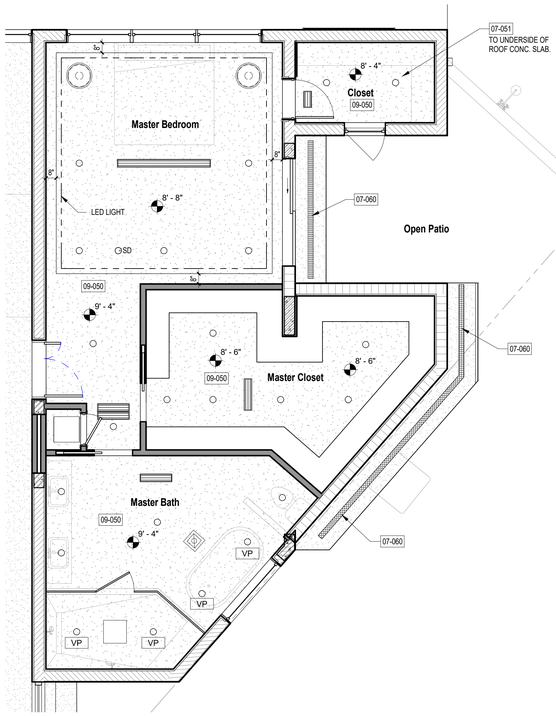

1 Partial, Proposed Master Suite RCP Plan
1/4" = 1'-0"

New Door Schedule										
Mark	Width	Height	Operation	Frame Material	Finish	Fire Rating	Hardware Key	R VALUE	SHGC	Comments
N01	3' - 10"	7' - 10"	SWING	WOOD	WOOD / PAINT	N/A	EXISTING			EXISTING MASTER BEDROOM DOOR TO BE RELOCATED TO THIS LOCATION. RE USE HARDWARE AND ACCESSORIES. REPAIR, REFINISH, ETC. AS REQUIRED / NECESSARY
N02	7' - 0"	8' - 0"	SLIDING	ALUMINUM	ALUM. COLOR TO MATCH EXISTING	N/A	16	1.05	0.5	IMPACT RESISTANT, CAT. II SAFETY GLASS
N03	2' - 6"	8' - 0"	SWING	WOOD	WOOD / PAINT	N/A	2			SOLID CORE, TO MATCH EXISTING DOORS IN DESIGN AND FINISH
N04	2' - 0"	8' - 0"	SWING	WOOD	WOOD / PAINT	N/A	2			FULL LOUVER DOOR, TO MATCH EXISTING IN DESIGN AND FINISH
N05	2' - 6"	8' - 0"	POCKET	WOOD	WOOD / PAINT	N/A	13			SOLID CORE, TO MATCH EXISTING DOORS IN DESIGN AND FINISH
N06	2' - 6"	8' - 0"	POCKET	WOOD	WOOD / PAINT	N/A	13			SOLID CORE, TO MATCH EXISTING DOORS IN DESIGN AND FINISH
N08	2' - 6"	7' - 0"	SWING	FRAMLESS	GLASS	N/A	HANDLE			GLASS SHOWER ENCLOSURE DOOR, CAT. II SAFETY GLASS OUTSWING
N09	2' - 4"	8' - 0"	SWING	WOOD	WOOD / PAINT	N/A	2			FULL LOUVER DOOR, TO MATCH EXISTING IN DESIGN AND FINISH
N10	2' - 6"	6' - 8"	SWING	WOOD	WOOD / PAINT	N/A	2,5			SOLID CORE, TO MATCH EXISTING DOORS IN DESIGN AND FINISH
N11	3' - 6"	8' - 0"	SWING	FRAMLESS	GLASS	N/A	2,5			CAT. II SAFETY GLASS DOOR
N12	3' - 0"	6' - 8"	FOLDING	WOOD	WOOD / PAINT	N/A	9			HOLLOW CORE, TO MATCH EXISTING DOORS IN DESIGN AND FINISH
N13	4' - 0"	6' - 8"	BIFOLDING	WOOD	WOOD / PAINT	N/A	9			HOLLOW CORE, TO MATCH EXISTING DOORS IN DESIGN AND FINISH
N14	4' - 0"	6' - 8"	BIFOLDING	WOOD	WOOD / PAINT	N/A	9			HOLLOW CORE, TO MATCH EXISTING DOORS IN DESIGN AND FINISH
N15	4' - 0"	6' - 8"	BIFOLDING	WOOD	WOOD / PAINT	N/A	9			HOLLOW CORE, TO MATCH EXISTING DOORS IN DESIGN AND FINISH
N16	2' - 0"	6' - 8"	SWING	WOOD	WOOD / PAINT	N/A	2			SOLID CORE, TO MATCH EXISTING DOORS IN DESIGN AND FINISH
N17	5' - 0"	6' - 8"	SWING	WOOD	WOOD / PAINT	N/A	2			SOLID CORE, TO MATCH EXISTING DOORS IN DESIGN AND FINISH

HARDWARE NOTES:
1-) PUSH PANIC BAR IN THE DIRECTION OF EGRESS (SHALL OVERWRITE LOCK MECHANISM).
2-) LEVEL TYPE PASSAGE HARDWARE .
3-) SELF CLOSER
4-) ADA COMPLIANT PULL BAR ON PULL SIDE AND PUSH PLATE ON OTHER SIDE.
5-) SECURITY LOCK OR BOLT
6-) INTERIOR SLIDING DOOR STANDARD HARDWARE BY MFG.
7-) SPRING HINGES FOR SELF CLOSING
8-) PEEP HOLE VIEWER
9-) STANDARD FOLDING DOORS HARDWARE
10-) HOLD-OPEN HARDWARE
11-) BARN DOOR STANDARD HARDWARE (ADA COMPLIANT)
12-) PRIVACY LOCK
13-) STANDARD POCKET DOOR HARDWARE
14-) SELF LATCHING. HARDWARE LOCATED @ 54" A.F.F. FOR POOL BARRIER REQUIREMENTS
15-) STANDARD GARAGE DOOR HARDWARE.
16-) STANDARD SLIDING GLASS DOOR HARDWARE WITH SECURITY LOCK.

New Window Schedule								
Type Mark	Operation	Width	Height	FRAME MATERIAL	FINISH	S.H.G.C.	R-VALUE	Comments
WA	FIXED	7' - 5"	3' - 0"	ALUMINUM	ALUM. COLOR TO MATCH EXISTING	0.5	1.05	IMPACT RESISTANT, CAT. II SAFETY GLASS
WB	FIXED	5' - 0"	5' - 0"	ALUMINUM	ALUM. COLOR TO MATCH EXISTING	0.5	1.05	IMPACT RESISTANT, CAT. II SAFETY GLASS
WC	FIXED	4' - 3"	2' - 0"	ALUMINUM	ALUM. COLOR TO MATCH EXISTING	0.5	1.05	IMPACT RESISTANT, CAT. II SAFETY GLASS
WD	CASEMENT	2' - 8"	3' - 8"	ALUMINUM	ALUM. COLOR TO MATCH EXISTING	0.5	1.05	IMPACT RESISTANT, CAT. II SAFETY GLASS. WIDTH TO FIT IN EXISTING OPENING, V.I.F.

Keynote Legend & General Notes (FLOOR PLANS & ELEVATIONS)	
Key Value	Keynote Text
03-000	CONCRETE
03-001	REFER TO STRUCT. DWGS. FOR ADDITIONAL INFORMATION REGARDING CONCRETE ELEMENTS, ETC.
03-011	CONCRETE SLAB, REFER TO STRUCT. DWGS. FOR SPECS, DETAILS, ETC.
03-012	CONCRETE FOOTING REFER TO STRUCT. DWGS. FOR SPECS, DETAIL, ETC.
03-013	CONCRETE SALB THICKENED EDGE, REFER TO STRUCT. DWGS. FOR SPECS.
03-020	CONCRETE BEAM, REFER TO STRUCT. DWGS. FOR SPECS.
03-022	CONCRETE SILL BEAM, REFER TO STRUCT. DWGS. FOR SPECS.
03-050	EXISTING CONCRETE SLAB, TO REMAIN. REFER TO STRUCT. DWGS. FOR ADDITIONAL INFORMATION, SPECS, DETAILS, ETC.
03-055	EXISTING CONCRETE FOUNDATION, TO REMAIN. REFER TO STRUCT. DWGS. FOR ADDITIONAL INFORMATION, SPECS, DETAILS, ETC.
03-060	EXISTING CONCRETE BEAM / TIE BEAM, TO REMAIN. REFER TO STRUCT. DWGS. FOR ADDITIONAL INFORMATION, SPECS, DETAILS, ETC.
03-061	EXISTING SILL BEAM, TO REMAIN. REFER TO STRUCT. DWGS. FOR ADDITIONAL INFORMATION, SPECS, DETAILS, ETC.
03-062	EXISTING CONCRETE COLUMN TO REMAIN. REFER TO STRUCT. DWGS. FOR ADDITIONAL INFORMATION, SPECS, DETAILS, ETC.
03-100	
04-000	MASONRY
04-001	REFER TO STRUCT. DWGS. FOR CMU SPECIFICATIONS, REQUIREMENTS, DETAILS, REINFORCEMENT, ETC.
04-010	CMU WALL, REFER TO STRUCT. DWGS. FOR SPECS.
04-020	EXISTING CMU WALL, TO REMAIN. REFER TO DEMOLITION DRAWINGS FOR AREAS OR PORTIONS OF WALL TO BE REMOVED (DASHED LINES INDICATE THE PORTION OF EXISTING CMU WALL TO BE REMOVED TO CREATE NEW OPENINGS), IF ANY. ALSO REFER TO STRUCT. DWGS. FOR ADDITIONAL INFORMATION AND SPECS.
04-100	
05-000	METALS AND STRUCTURAL STEEL
05-001	GENERAL CONTRACTOR SHALL COORDINATE THICKNESS OF PARTITIONS TO ACCOMMODATE MECHANICAL, PLUMBING, AND ELECTRICAL WORK. DIMENSIONS SHOWN ON PLANS ARE NOMINAL.
05-020	STRUCTURAL STEEL, COLUMNS, BEAMS, CHANNELS, JOISTS, FLANGES, ANGLES, ETC. REFER TO STRUCTURAL DWGS. FOR SPECIFICATIONS AND ADDITIONAL INFORMATION.
05-065	METAL STUD FRAMING FOR CEILING @ 16" o/c MAX. SPACING. PROVIDE VERTICAL SUPPORT CONNECTED TO OVERHEAD JOISTS OR DECK @ 4'-0" MAX. SPACING, TYP.
05-080	METAL STRAPS & CONNECTORS, REFER TO STRUCT. DWGS. FOR SPECS.
05-100	
06-000	WOOD AND PLASTICS
06-001	REFER TO STRUCTTURAL DWGS. FOR ADDITIONAL INFORMATION AND SPECIFICATIONS REGARDING WOOD ELEMENTS AND MATERIAL
06-002	ALL WOOD MEMBERS, PLYWOOD SHEATHING, ETC. IN CONTACT WITH CONCRETE OR STEEL SHALL BE P.T. / CDX WOOD / SHEATHING.
06-011	1x4 P.T. WOOD HORIZONTAL FIRE STOPPING CONT. @ 8'-0" o/c MAX. SPACING AND SHALL ALSO BE PROVIDED AROUND ALL OPENINGS.
06-012	P.T. WOOD LEDGER, REFER TO STRUCT. DWGS. FOR SPECS.
06-029	WOOD FASCIA & NAILER, REFER TO DETAILS AND STRUCT. DWGS. FOR NAILING, SPECS, ETC.
06-040	WOOD FRAMING, REFER TO STRUCTURAL DWGS. FOR ADDITIONAL SPECIFICATION, SPACING, CONNECTIONS, ETC.
06-070	PLYWOOD SHEATHING DECK / WAILLS / SOFFITS, REFFER TO STRUCT. DWGS. FOR SPEC. NAILING, ETC.
06-075	EXISTING PLYWOOD SHEATHING ROOF DECK, TO REMAIN. REFER TO STRUCT. DWGS. FOR ADDITIONAL INFORMATION, SPECS, DETAILS, ETC.
06-091	EXISTING WOOD STRUCTURAL FRAMING TO REMAIN AND NOT ALTERED, TYP.
06-100	
07-000	THERMAL AND MOISTURE PROTECTION
07-004	BUILDING ENVELOPE: THE INTENT AND PERFORMANCE OBJECTIVE OF THESE DRAWINGS IS TO PROVIDE A BUILDING ENVELOPE THAT PREVENTS WATER / MOISTURE INTRUSION INTO THE BUILDING. ALL WORK PERFORMED SHALL BE DONE IN A MANNER TO ACHIEVE THESE PERFORMANCE STANDARD TO THE MINIMUM PRESCRIBED BUILDING CODE REQUIREMENTS AND INDUSTRY STANDARDS. ALL PENETRATIONS THRU THE BUILDING ENVELOPE SHALL BE SEALED, FLASHED, PROTECTED, ETC. AS TO PREVENT WATER / MOISTURE INTRUSION INTO THE BUILDING. GENERAL CONTRACTOR SHALL PROVIDE THE OWNER WITH ALL WARRANTIES, CERTIFICATIONS, ETC. FOR THE BUILDING ENVELOPE COMPONENTS & SYSTEMS.
07-010	ROOFING SYSTEM, (STANDING SEAM METAL ROOF) ON ROOF DECK (REFER TO STRUCT. DWGS.) ROOFING SYSTEM SHALL BE UNDER A SEPARATE PERMIT. CONTRACTOR SHALL SUBMIT SHOP DRAWINGS, SPECS, DETAILS, NOAs, ETC. AND SUBMIT TO THE ARCHENG OF RECORD FOR APPROVAL.
07-035	GALVANIZED STEEL DRIP EDGE, CONT. TYP. ANCHORED TO DECK @ 6" o/c.
07-040	6 MIL MIN. VAPOR BARRIER.
07-050	IN-FURRING CAVITY INSULATION. R-5 MIN. RIGID BOARD OR ALUMINUM FOIL.
07-051	AIR-IMPERMIABLE SPRAY FOAM INSULATION. APPLY TO THE UNDERSIADE OF ROOF DECK AND SIDE OF WALLS ABOVE CEILING. R-19 MIN. VALUE. INSULATION APPLICATION SHALL COMPLY WITH FBC 2020 7th EDITION RESIDENTIAL SECTION R806.5 AND SECTION R316. ALL INSULATION MATERIAL TO HAVE A FLAME SPREAD INDEX OF NOT MORE THAN 25 AND A SMOKE-DEVELOPED INDEX OF NOT MORE THAN 450, AS PER FBC 2020 BUILDING SECTION 720.2.
07-052	PROVIDE R-30 ATTIC INSULATION IN ATTIC SPACE, TYP.
07-060	4" CONT. VENTILATION STRIP. SHALL BE PROVIDED WITH NON-CORROSIVE INSECT SCREEN WITH 1/6" MIN. & 1/4" MAX. SCREEN SIZE.
07-100	
08-000	DOORS, WINDOWS AND STORE FRONTS
08-001	GENERAL CONTRACTOR SHALL PROVIDE CONTINUOUS CAULK AND SEALANT AROUND ALL EXTERIOR OPENINGS TO PREVENT WATER PENETRATION AND AIR LEAKAGE IN ACCORDANCE WITH THE FLORIDA BUILDING CODE (LATEST APPLICABLE EDITION).
08-002	ALL DOORS AND WINDOWS SHALL BE APPROVED BY THE OWNER / ARCH / ENG THRU A PROCESS OF SHOP DRAWINGS SUBMITTAL BEFORE ANY MANUFACTURING CAN TAKE PLACE.
08-003	GENERAL CONTRACTOR SHALL COORDINATE THE ROUGH OPENING SIZES WITH THE DOOR / WINDOW MANUFACTURER. CONTRACTOR SHALL VERIFY ALL DIMENSIONS AND ROUGH OPENINGS ON THE FIELD PRIOR TO ORDERING AND MANUFACTURING.
08-004	ALL INTERIOR DOORS SHALL BE STAIN-READY FINISHED OR PRIMED.

Keynote Legend & General Notes (FLOOR PLANS & ELEVATIONS)	
Key Value	Keynote Text
08-005	ALL GLAZING FOR EXTERIOR DOORS AND WINDOWS SHALL BE IMPACT RESISTANT, OR STORM SHUTTERS SHALL BE PROVIDED FOR ALL FENESTRATION THAT IS NOT IMPACT RESISTANT. STORM SHUTTERS SHALL BE UNDER A SEPARATE PERMIT. CONTRACTOR SHALL SUBMIT SHOP DRAWINGS, DETAILS, SPECS, NOAs, PRODUCT APPROVALS, ETC. AND SUBMIT FOR APPROVAL.
08-006	EXTERIOR DOORS AND WINDOWS SHALL BE UNDER A SEPARATE PERMIT. GC SHALL PROVIDE SHOP DRAWINGS, SPECS, DETAILS, CALCULATIONS, NOAs, ETC. AND SUBMIT TO ARCHITECT / ENGINEER OF RECORD FOR APPROVAL.
08-007	DETAILS SHOWN ON THIS SET ARE TYPICAL. APPROVED WINDOW AND DOORS SYSTEM MAY REQUIRE DIFFERENT AND/OR ADDITIONAL DETAILS TO DESCRIBE SYSTEM CONDITIONS. CONTRACTOR SHALL PROVIDE ALL NECESSARY DETAILS, SPECS, ETC. FOR THE SELECTED WINDOWS AND DOORS. THIS INFORMATION SHALL BE SUBMITTED TO THE ARCHITECT/ENGINEER FOR APPROVAL.
08-008	ALL EXTERIOR DOORS SHALL BE PROVIDED WITH THRESHOLDS AND WEATHER STRIPPING TYP.
08-009	ALL EXTERIOR DOORS, STORE FRONTS, AND WINDOWS SHALL BE TESTED (AS PER MANUFACTURER SPECIFICATIONS AND / OR INDUSTRY STANDARDS) FOR WATER INTRUSION. ALL EXTERIOR FENESTRATION SHALL BE WATER, HUMIDITY TIGHT TYP.
08-010	ALL INTERIOR DOORS SHALL BE STAIN-READY FINISHED OR PRE-PAINTED AND PROVIDED WITH DOOR STOP HARDWARE, AS REQUIRED.
08-100	
09-000	FINISHES
09-001	GENERAL BATHROOM FINISH SCHEDULE:1-)FLOOR: -BATHROOM:IMPERVIOUS TILE & MORTAR. -SHOWER: IMPERVIOUS, SLIP RESISTANT TILE & GROUT, OR NON-ABSORBENT SURFACE. 2)WALLS:-BATHROOM: MOISTURE / MILDEW RESISTANT PAINT ON MOISTURE RESISTANT DRYWALL (GREEN BOARD) AND/OR IMPERVIOUS TILE & GROUT ON CEMENT BOARD BACKER. -SHOWERTUB: IMPERVIOUS TILE & GROUT, OR NON-ABSORBENT SURFACE FROM FLOOR TO CEILING OR TO A MIN. OF 72" ABOVE DRAIN, ON CEMENT BACKER. 3-)CEILING: MOISTURE / MILDEW RESISTANT PAINT ON MOISTURE RESISTANT DRYWALL (GREEN BOARD). NOTE: FIBER CEMENT, FIBER-MAT REINFORCED CEMENT, GLASS MAT GYPSUM BACKERS AND/FIBER-REINFORCED CEMENT BACKERS SHALL BE USED AS BACKERS FOR WALL TILE IN TUB AND SHOWER AREAS AND WALL PANELS IN SHOWER AREAS.
09-019	THIN NATURAL STONE VENEER / PORCELAIN TILE DECORATIVE WALL CLADDING, ON FULL BED SETTING / BONDING MIX, ON CMU / CONCRETE WALLS. PROVIDE FULL COVERAGE WITH BONDING AGENT TO ALL AREAS OF WALLS AND CONCRETE ELEMENTS TO RECEIVE STONE / TILE CLADDING. BEFORE STONE VENEER / TILE APPLICATION, APPLY BONDING AGENT TO ALL EXPOSED CONCRETE AREAS. TYP.
09-020	CERAMIC TILE FLOOR FINISH TO BE SELECTED BY OWNER, AT UPPER FLOORS ABOVE LIVING SPACES, PROVIDE UNDER TILE SOUND INSULATION MEMBRANE. ALL TILE INSTALLATION SHALL BE ON CONCRETE SLAB OR 1/2" MIN. CEMENT BACKER. TYP
09-021	CERAMIC TILE FLOOR FINISH FOR OUTSIDE TERRACE. SHALL BE SLIP RESISTANT. TO BE SELECTED BY OWNER, TYP.
09-023	EXPOSED CONCRETE FINISH (STEEL TROWEL FINISH) W/ EPOXY PAINT FINISH. COLOR TO BE SELECTED BY OWNER, TYP.
09-030	5/8" MIN. THICK SMOOTH STUCCO FINISH, PAINTED. 3-COAT APPLICATION. PROVIDE CONTROL AND EXPANSION JOINTS AS NECESSARY TO AVOID CRACKING, AND AS PER INDUSTRY STANDARDS AND MINIMUM CODE REQUIREMENTS. PROVIDE BONDING AGENT TO ALL EXPOSED CONCRETE TO RECEIVE STUCCO FINISH.
09-040	1/2" GYPSUM WALL BOARD FINISH, PAINTED, ON FURRING STRIP / FRAMING STUDS.
09-044	PROVIDE IMPERVIOUS TILE & GROUT WALL FINISH AT SHOWERS FROM FLOOR TO CEILING OR TO A MINIMUM OF 72" ABOVE SHOWER FLOOR. PROVIDE 1/2" CEMENT BOARD SUBSTRATE FOR ALL WALL TILE INSTALLATION, TYP. FOR OPTIONAL POOL BATHROOM, PROVIDE TILE APPLICATION ON ALL WALLS, AND FROM FLOOR TO CEILING.
09-050	5/8" MIN. GYPSUM WALL BOARD CEILING FINISH, PAINTED, ON FURRING STRIPS, ON ROOF TRUSSES / FRAMING.
09-100	
10-000	SPECIALTY CONSTRUCTION
10-005	KITCHEN CABINETS AND COUNTER TOPS. TO BE SELECTED AND APPROVED BY OWNER / ID. MANUFACTURER SHALL PROVIDE SHOP DRAWINGS, DESIGN, SPECS, DETAILS, ETC. AND PROVIDE TO OWNER / ARCH. FOR APPROVAL PRIOR TO ORDERING, FABRICATION, OR INSTALLATION.
10-010	BATHROOM CABINETS, VANITIES, & COUNTER TOPS. TO BE SELECTED AND APPROVED BY OWNER. MANUFACTURER SHALL PROVIDE SHOP DRAWINGS, DESIGN, SPECS, DETAILS, ETC. AND PROVIDE TO OWNER / ARCH. FOR APPROVAL PRIOR TO ORDERING, FABRICATION, OR INSTALLATION.
10-012	CARPENTRY, MILLWORK, CABINETRY, TRIM, ETC. TO BE SELECTED AND APPROVED BY OWNER / ID. MANUFACTURER SHALL PROVIDE SHOP DRAWINGS, DESIGN, SPECS, DETAILS, ETC. AND PROVIDE TO OWNER / ARCH. FOR APPROVAL PRIOR TO ORDERING, FABRICATION, OR INSTALLATION.
10-013	CABINETS AND COUNTER TOPS. TO BE SELECTED AND APPROVED BY OWNER / ID. MANUFACTURER SHALL PROVIDE SHOP DRAWINGS, DESIGN, SPECS, DETAILS, ETC. AND PROVIDE TO OWNER / ARCH. FOR APPROVAL PRIOR TO ORDERING, FABRICATION, OR INSTALLATION.
10-030	CLOSET RACKS, SHELVES, ETC. TO BE SELECTED BY OWNER / ID, TYP.
10-040	GLASS SHOWER ENCLOSURE. PROVIDE CATEGORY II SAFETY GLASS SHOWER ENCLOSURE WITH 22" MINIMUM CLEAR OPENING DOOR.
10-057	EXISTING POOL SAFETY BARRIER FENCE / MESH. SHALL COMPLY WITH FBC RESIDENTIAL SECTION R4501.17.1 AND SECTION R4501.17.1.15.
10-100	
11-000	EQUIPMENT
11-001	REFER TO EACH TRADE FOR SPECIFICATION AND INFORMATION REGARDING EQUIPMENT, APPIANCES, ETC.
11-002	ALL EQUIPMENT, APPLIANCES, ETC. SHALL BE SELECTED AND APPROVED BY OWNER.
11-021	GAS POWERED STOVE & OVEN, TO BE SELECTED BY OWNER. REFER TO E/MP DWGS. FOR ADDITIONAL INFORMATION.
11-030	EXHAUST HOOD, TO BE SELECTED BY OWNER. REFER TO E/MP DWGS. FOR ADDITIONAL INFORMATION.
11-100	
13-000	CONVEYING SYSTEMS
13-100	
14-000	MECHANICAL
14-001	REFER TO MECHANICAL DWGS. FOR ADDITIONAL INFORMATION, SPECS, CALCULATIONS, REGARDING MECHANICAL EQUIPMENT & FIXTURES.
14-002	EXISTING MECHANICAL EQUIPMENT TO REMAIN AND NOT ALTERED, TYP.
14-006	MECHANICAL EQUIPMENT AHU, REFER TO MECH. DWGS. FOR SPECS.
14-100	

Keynote Legend & General Notes (FLOOR PLANS & ELEVATIONS)	
Key Value	Keynote Text
15-000	ELECTRICAL
15-001	REFER TO ELECTRICAL DWGS. FOR ADDITIONAL INFORMATION, SPECS, CALCULATIONS, REGARDING ELECTRICAL EQUIPMENT & FIXTURES.
15-002	ALL ELECTRICAL FIXTURES, ACCESSORIES, APPLIANCES, FINISHES, ETC. SHALL BE SELECTED AND APPROVED BY OWNER BEFORE ORDERING, MANUFACTURING, FABRICATION, OR INSTALLATION.
15-100	
16-000	PLUMBING
16-001	REFER TO PLUMBING DWGS. FOR ADDITIONAL INFORMATION, SPECS, CALCULATIONS, REGARDING ELECTRICAL EQUIPMENT & FIXTURES.
16-002	ALL PLUMBING ACCESSORIES, FIXTURES, ETC. TO BE APPROVED BY OWNER / ID BEFORE ORDERING, MANUFACTURING, OR INSTALLATION, TYP.
16-003	PLUMBING EQUIPMENT, FIXTURES, ACCESSORIES, ETC. REFER TO PLUMBING DWGS. FOR ADDITIONAL SPECS, INFORMATION, DETAILS, ETC.
16-005	BATHROOM VANITY SINK, TO BE SELECTED AND APPROVED BY OWNER. ALSO REFER TO PLUMBING DWGS. FOR ADDITIONAL SPECS.
16-010	TOILET, TO BE SELECTED AND APPROVED BY OWNER. ALSO REFER TO PLUMBING DWGS. FOR ADDITIONAL SPECS.
16-015	JACUZZI TUB. TO BE SELECTED AND APPROVED BY OWNER. ALSO REFER TO PLUMBING DWGS. FOR ADDITIONAL SPECS.
16-018	SHOWER DRAIN, TO BE SELECTED AND APPROVED BY OWNER / ID.
16-032	LAUNDRY SINK, COUNTER TOP MOUNTED. REFER TO ME/P DWGS. FOR ADDITIONAL INFORMATION. TO BE SELECTED AND APPROVED BY OWNER / ID. TYP.
16-100	
17-000	FIRE SAFETY AND PROTECTION
17-100	

REFER TO SHEET A300 FOR KEYNOTE SCHEDULE FOR FLOOR PLANS & ELEVATIONS.

NOVUS Archetype
architecture / interior / planning
NOVUS Archetype, LLC
12721 SW 30th ST. MIAMI, FL 33175
PH: (305) 505-6910
email: julio@novusarchetype.com
AA26001460
Qualifier: Julio Pulido, AIA
License #: AR93904
Qualifier : Salvador Ben Mitrani, NCARB
License # : AR99606

STATE OF FLORIDA · JULIO PULIDO · AR93904 · LICENSED ARCHITECT

Julio Pulido
Digitally signed by Julio Pulido
Date: 2024.12.20 12:28:35 -05'00'

Dylan & Jamie Roy

Interior Remodeling & Addition

6783 SW 104th St Pincrest, Fl 33156

No.	Description	Date

Project number	24-011
Date	07-10-24
Drawn by	JP
Checked by	JP

SHEET TITLE

Proposed, Partial Master Suite RCP Plan

SHEET No.

A300

Miami Dade County Department of Regulatory and Economic Resources - Job Copy
2025008506 - 5/19/2025 11:05:46 AM
A300.pdf

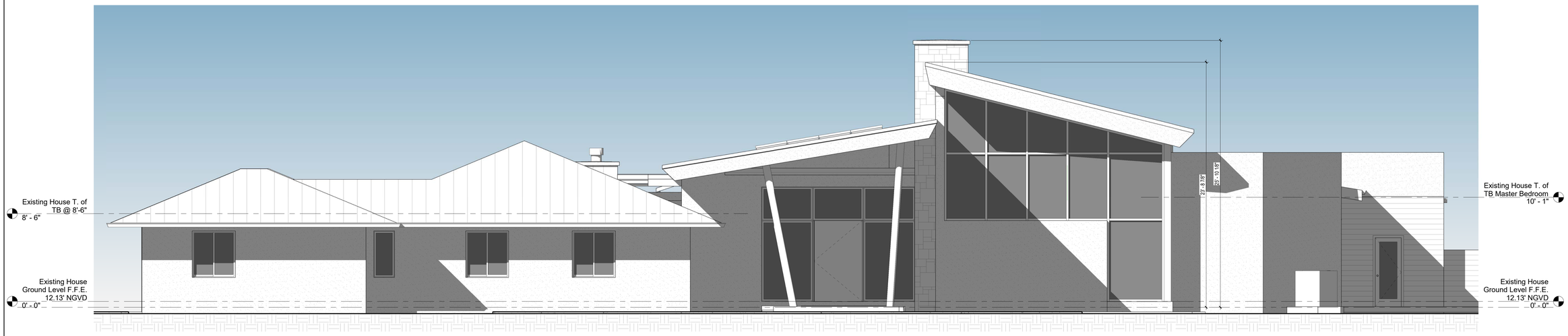

1 Existing Front Elevation
1/4" = 1'-0"

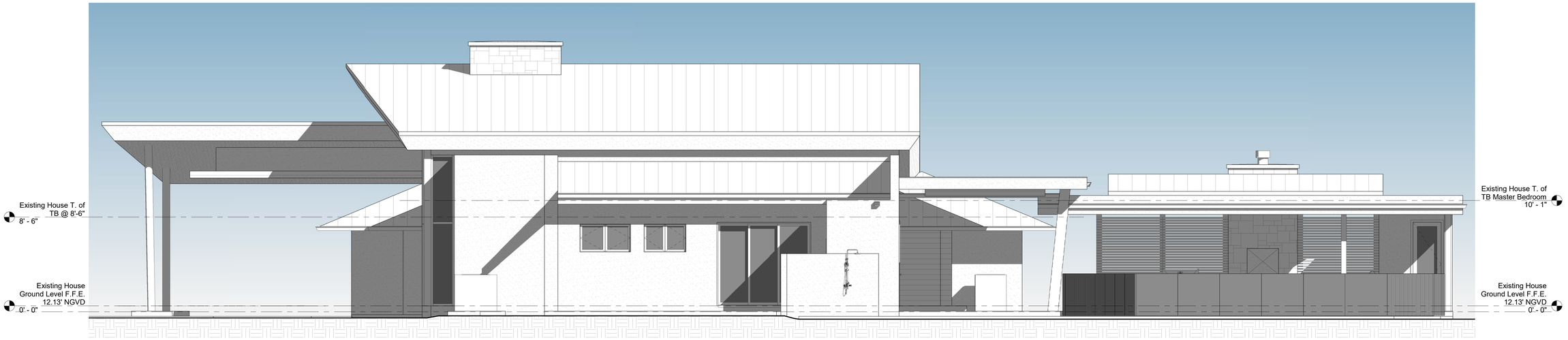

2 Existing Elevation Side (NE)
1/4" = 1'-0"

REFER TO SHEET A300 FOR KEYNOTE SCHEDULE FOR FLOOR PLANS & ELEVATIONS.

NOVUS Archetype
architecture / interior / planning

NOVUS Archetype, LLC
12721 SW 30th ST. MIAMI, FL 33175
PH: (305) 505-6910
email: julio@novusarchetype.com
AA26001460
Qualifier: Julio Pulido, AIA
License #: AR93904
Qualifier : Salvador Ben Mitrani, NCARB
License # : AR99606

STATE OF FLORIDA
JULIO PULIDO
AR93904
REGISTERED ARCHITECT

Julio Pulido
Digitally signed by Julio Pulido
Date: 2024.12.20 12:29:14 -05'00'

Dylan & Jamie Roy

Interior Remodeling & Addition

6783 SW 104th St Pincrest, Fl 33156

No.	Description	Date

Project number	24-011
Date	07-10-24
Drawn by	JP
Checked by	JP

SHEET TITLE

Existing Elevations

SHEET No.

A400

Miami Dade County Department of Regulatory and Economic Resources - Job Copy
20250085506 - 5/19/2025 11:05:46 AM
A400.pdf

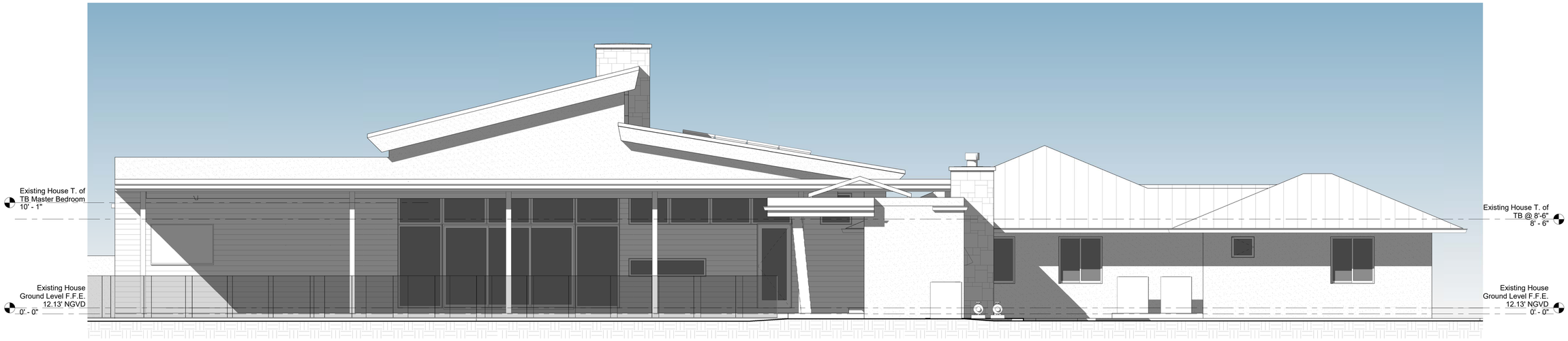

1 Existing Elevation Rear
1/4" = 1'-0"

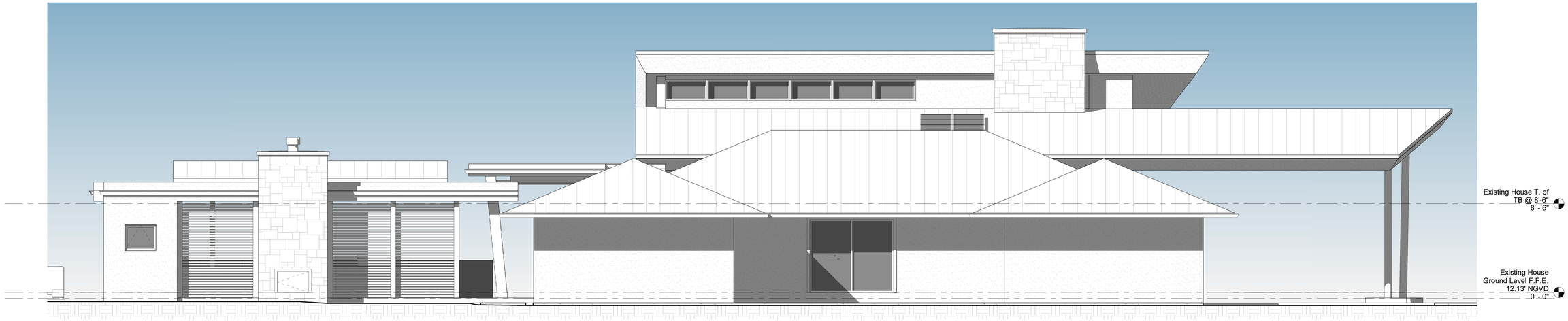

2 Existing Elevation Side (SW)
1/4" = 1'-0"

REFER TO SHEET A300 FOR KEYNOTE SCHEDULE
FOR FLOOR PLANS & ELEVATIONS.

NOVUS Archetype
architecture / interior / planning

NOVUS Archetype, LLC
12721 SW 30th ST. MIAMI, FL 33175
PH: (305) 505-6910
email: julio@novusarchetype.com
AA26001460
Qualifier: Julio Pulido, AIA
License #: AR93904
Qualifier : Salvador Ben Mitrani, NCARB
License # : AR99606

STATE OF FLORIDA
JULIO PULIDO
AR93904
REGISTERED ARCHITECT

Julio Pulido
Digitally signed by Julio Pulido
Date: 2024.12.20 12:29:54 -05'00'

Dylan & Jamie Roy

Interior Remodeling & Addition

6783 SW 104th St Pincrest, Fl 33156

No.	Description	Date

Project number	24-011
Date	07-10-24
Drawn by	JP
Checked by	JP

SHEET TITLE

Existing Elevations

SHEET No.

A405

Miami Dade County Department of Regulatory and Economic Resources - Job Copy
2025008506 - 5/19/2025 11:05:46 AM
A405.pdf

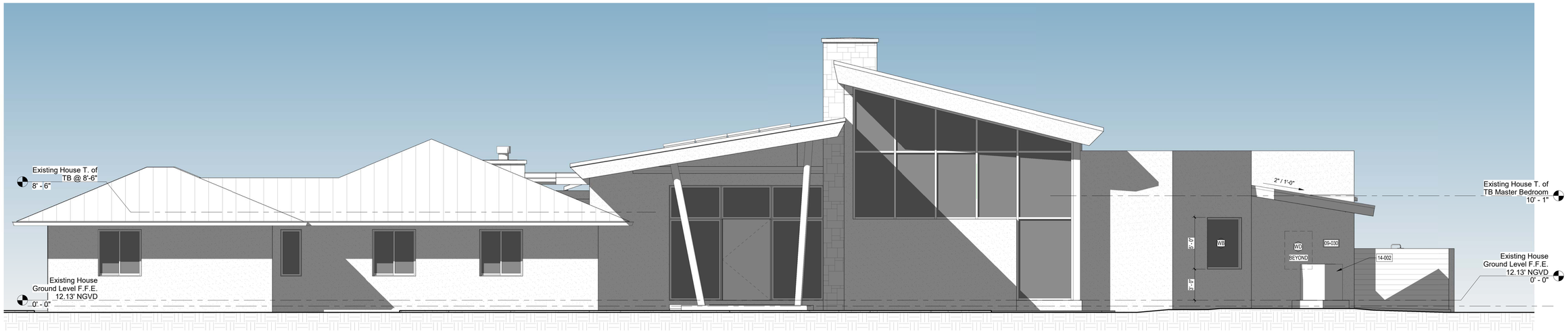

1 Proposed Addition Front Elevation
1/4" = 1'-0"

3 Proposed Addition Rear Elevation
1/4" = 1'-0"

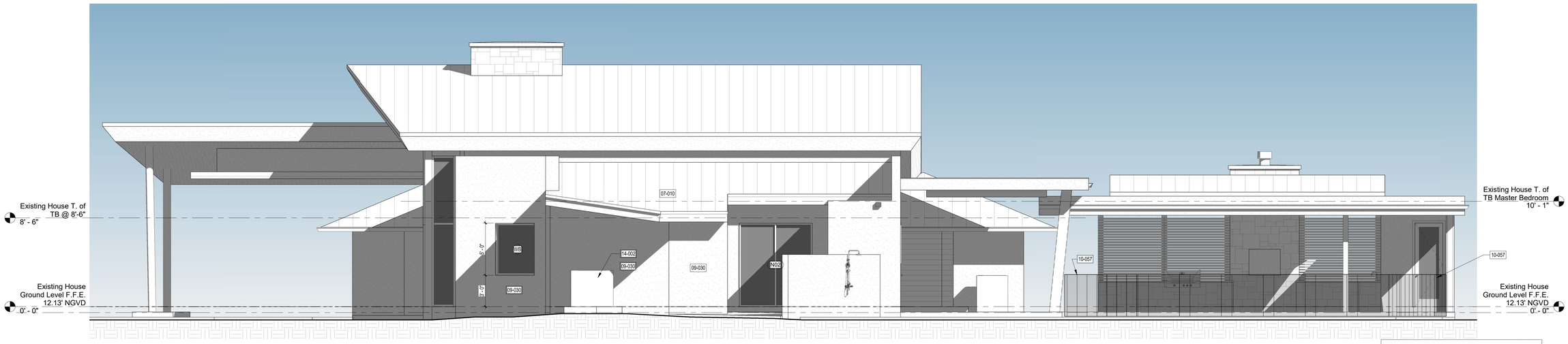

2 Proposed Addition Elevation Side
1/4" = 1'-0"

REFER TO SHEET A300 FOR KEYNOTE SCHEDULE FOR FLOOR PLANS & ELEVATIONS.

NOVUS Archetype
architecture / interior / planning

NOVUS Archetype, LLC
12721 SW 30th ST. MIAMI, FL 33175
PH: (305) 505-6910
email: julio@novusarchetype.com
AA26001460
Qualifier: Julio Pulido, AIA
License #: AR93904
Qualifier : Salvador Ben Mitrani, NCARB
License # : AR99606

STATE OF FLORIDA
JULIO PULIDO
AR93904
REGISTERED ARCHITECT

Julio Pulido
Digitally signed by Julio Pulido
2024.12.20 12:30:37 -05'00'

Dylan & Jamie Roy

Interior Remodeling & Addition

6783 SW 104th St Pincrest, Fl 33156

No.	Description	Date

Project number	24-011
Date	07-10-24
Drawn by	JP
Checked by	JP

SHEET TITLE

Proposed Elevations

SHEET No.

A410

Miami Dade County Department of Regulatory and Economic Resources - Job Copy
2025008506 5/19/2025 11:05:46 AM
A410.pdf

Keynote Legend & General Notes (SECTIONS & DETAILS)

Key Value	Keynote Text
03-000	CONCRETE
03-001	REFER TO STRUCT. DWGS. FOR ADDITIONAL INFORMATION REGARDING CONCRETE ELEMENTS, ETC.
03-011	CONCRETE SLAB, REFER TO STRUCT. DWGS. FOR SPECS, DETAILS, ETC.
03-012	CONCRETE FOOTING REFER TO STRUCT. DWGS. FOR SPECS, DETAILL, ETC.
03-013	CONCRETE SALB THICKENED EDGE, REFER TO STRUCT. DWGS. FOR SPECS.
03-020	CONCRETE BEAM, REFER TO STRUCT. DWGS. FOR SPECS.
03-022	CONCRETE SILL BEAM, REFER TO STRUCT. DWGS. FOR SPECS.
03-050	EXISTING CONCRETE SLAB, TO REMAIN. REFER TO STRUCT. DWGS. FOR ADDITIONAL INFORMATION, SPECS, DETAILS, ETC.
03-055	EXISTING CONCRETE FOUNDATION, TO REMAIN. REFER TO STRUCT. DWGS. FOR ADDITIONAL INFORMATION, SPECS, DETAILS, ETC.
03-060	EXISTING CONCRETE BEAM / TIE BEAM, TO REMAIN. REFER TO STRUCT. DWGS. FOR ADDITIONAL INFORMATION, SPECS, DETAILS, ETC.
03-061	EXISTING SILL BEAM, TO REMAIN. REFER TO STRUCT. DWGS. FOR ADDITIONAL INFORMATION, SPECS, DETAILS, ETC.
03-062	EXISTING CONCRETE COLUMN TO REMAIN. REFER TO STRUCT. DWGS. FOR ADDITIONAL INFORMATION, SPECS, DETAILS, ETC.
03-100	
04-000	MASONRY
04-001	REFER TO STRUCT. DWGS. FOR CMU SPECIFICATIONS, REQUIREMENTS, DETAILS, REINFORCEMENT, ETC.
04-010	CMU WALL REFER TO STRUCT. DWGS. FOR SPECS.
04-020	EXISTING CMU WALL, TO REMAIN. REFER TO DEMOLITION DRAWINGS FOR AREAS OR PORTIONS OF WALL TO BE REMOVED (DASHED LINES INDICATE THE PORTION OF EXISTING CMU WALL TO BE REMOVED TO CREATE NEW OPENINGS), IF ANY. ALSO REFER TO STRUCT. DWGS. FOR ADDITIONAL INFORMATION AND SPECS.
04-100	
05-000	METALS AND STRUCTURAL STEEL
05-001	GENERAL CONTRACTOR SHALL COORDINATE THICKNESS OF PARTITIONS TO ACCOMMODATE MECHANICAL, PLUMBING, AND ELECTRICAL WORK. DIMENSIONS SHOWN ON PLANS ARE NOMINAL.
05-020	STRUCTURAL STEEL: COLUMNS, BEAMS, CHANNELS, JOISTS, FLANGES, ANGLES, ETC. REFER TO STRUCTURAL DWGS. FOR SPECIFICATIONS AND ADDITIONAL INFORMATION.
05-065	METAL STUD FRAMING FOR CEILING @ 16" c/c MAX. SPACING. PROVIDE VERTICAL SUPPORT CONNECTED TO OVERHEAD JOISTS OR DECK @ 4'-0" MAX. SPACING, TYP.
05-080	METAL STRAPS & CONNECTORS, REFER TO STRUCT. DWGS. FOR SPECS.
05-100	
06-000	WOOD AND PLASTICS
06-001	REFER TO STRUCTTURAL DWGS. FOR ADDITIONAL INFORMATION AND SPECIFICATIONS REGARDING WOOD ELEMENTS AND MATERIAL.
06-002	ALL WOOD MEMBERS, PLYWOOD SHEATHING, ETC. IN CONTACT WITH CONCRETE OR STEEL SHALL BE P.T. / CDX WOOD / SHEATHING.
06-011	1x4 P.T. WOOD HORIZONTAL FIRE STOPPING CONT. @ 8'-0" c/c MAX. SPACING AND SHALL ALSO BE PROVIDED AROUND ALL OPENINGS.
06-012	P.T. WOOD LEDGER, REFER TO STRUCT. DWGS. FOR SPECS.
06-029	WOOD FASCIA & NAILER, REFER TO DETAILS AND STRUCT. DWGS. FOR NAILING, SPECS, ETC.
06-040	WOOD FRAMING, REFER TO STRUCTURAL DWGS. FOR ADDITIONAL SPECIFICATION, SPACING, CONNECTIONS, ETC.
06-070	PLYWOOD SHEATHING DECK / WALLS / SOFFITS, REFFER TO STRUCT. DWGS. FOR SPEC. NAILING, ETC.
06-075	EXISTING PLYWOOD SHEATHING ROOF DECK, TO REMAIN. REFER TO STRUCT. DWGS. FOR ADDITIONAL INFORMATION, SPECS, DETAILS, ETC.
06-091	EXISTING WOOD STRUCTURAL FRAMING TO REMAIN AND NOT ALTERED, TYP.
06-100	
07-000	THERMAL AND MOISTURE PROTECTION
07-004	BUILDING ENVELOPE: THE INTENT AND PERFORMANCE OBJECTIVE OF THESE DRAWINGS IS TO PROVIDE A BUILDING ENVELOPE THAT PREVENTS WATER / MOISTURE INTRUSION INTO THE BUILDING. ALL WORK PERFORMED SHALL BE DONE IN A MANNER TO ACHIEVE THESE PERFORMANCE STANDARD TO THE MINIMUM PRESCRIBED BUILDING CODE REQUIREMENTS AND INDUSTRY STANDARDS. ALL PENETRATIONS THRU THE BUILDING ENVELOPE SHALL BE SEALED, FLASHED, PROTECTED, ETC. AS TO PREVENT WATER / MOISTURE INTRUSION INTO THE BUILDING. GENERAL CONTRACTOR SHALL PROVIDE THE OWNER WITH ALL WARRANTIES, CERTIFICATIONS, ETC. FOR THE BUILDING ENVELOPE COMPONENTS & SYSTEMS.
07-010	ROOFING SYSTEM, (STANDING SEAM METAL ROOF) ON ROOF DECK, (REFER TO STRUCT. DWGS.) ROOFING SYSTEM SHALL BE UNDER A SEPARATE PERMIT. CONTRACTOR SHALL SUBMIT SHOP DRAWINGS, SPECS, DETAILS, NOAs, ETC. AND SUBMIT TO THE ARCHENG OF RECORD FOR APPROVAL.
07-035	GALVANIZED STEEL DRIP EDGE, CONT. TYP. ANCHORED TO DECK @ 6" c/c.
07-040	6 MIL MIN. VAPOR BARRIER.
07-050	IN-FURRING CAVITY INSULATION. R-5 MIN. RIGID BOARD OR ALUMINUM FOIL.
07-051	AIR-IMPERMABLE SPRAY FOAM INSULATION. APPLY TO THE UNDERSIADE OF ROOF DECK AND SIDE OF WALLS ABOVE CEILING. R-19 MIN. VALUE. INSULATION APPLICATION SHALL COMPLY WITH FBC 2020 7th EDITION RESIDENTIAL SECTION R806.5 AND SECTION R316. ALL INSULATION MATERIAL TO HAVE A FLAME SPREAD INDEX OF NOT MORE THAN 25 AND A SMOKE-DEVELOPED INDEX OF NOT MORE THAN 450, AS PER FBC 2020 BUILDING SECTION 720.2.
07-052	PROVIDE R-30 ATTIC INSULATION IN ATTIC SPACE, TYP.
07-060	4" CONT. VENTILATION STRIP. SHALL BE PROVIDED WITH NON-CORROSIVE INSECT SCREEN WITH 1/6" MIN. & 1/4" MAX. SCREEN SIZE.
07-100	
08-000	DOORS, WINDOWS AND STORE FRONTS
08-001	GENERAL CONTRACTOR SHALL PROVIDE CONTINUOUS CAULK AND SEALANT AROUND ALL EXTERIOR OPENINGS TO PREVENT WATER PENETRATION AND AIR LEAKAGE IN ACCORDANCE WITH THE FLORIDA BUILDING CODE (LATEST APPLICABLE EDITION).
08-002	ALL DOORS AND WINDOWS SHALL BE APPROVED BY THE OWNER / ARCH / ENG THRU A PROCESS OF SHOP DRAWINGS SUBMITTAL BEFORE ANY MANUFACTURING CAN TAKE PLACE.
08-003	GENERAL CONTRACTOR SHALL COORDINATE THE ROUGH OPENING SIZES WITH THE DOOR / WINDOW MANUFACTURER. CONTRACTOR SHALL VERIFY ALL DIMENSIONS AND ROUGH OPENINGS ON THE FIELD PRIOR TO ORDERING AND MANUFACTURING.
08-004	ALL INTERIOR DOORS SHALL BE STAIN-READY FINISHED OR PRIMED.
08-005	ALL GLAZING FOR EXTERIOR DOORS AND WINDOWS SHALL BE IMPACT RESISTANT, OR STORM SHUTTERS SHALL BE PROVIDED FOR ALL FENESTRATION THAT IS NOT IMPACT RESISTANT. STORM SHUTTERS SHALL BE UNDER A SEPARATE PERMIT. CONTRACTOR SHALL SUBMIT SHOP DRAWINGS, DETAILS, SPECS, NOAs, PRODUCT APPROVALS, ETC. AND SUBMIT FOR APPROVAL.
08-006	EXTERIOR DOORS AND WINDOWS SHALL BE UNDER A SEPARATE PERMIT. GC SHALL PROVIDE SHOP DRAWINGS, SPECS, DETAILS, CALCULATIONS, NOAs, ETC. AND SUBMIT TO ARCHITECT / ENGINEER OF RECORD FOR APPROVAL.
08-007	DETAILS SHOWN ON THIS SET ARE TYPICAL. APPROVED WINDOW AND DOORS SYSTEM MAY REQUIRE DIFFERENT AND/OR ADDITIONAL DETAILS TO DESCRIBE SYSTEM CONDITIONS. CONTRACTOR SHALL PROVIDE ALL NECESSARY DETAILS, SPECS, ETC. FOR THE SELECTED WINDOWS AND DOORS. THIS INFORMATION SHALL BE SUBMITTED TO THE ARCHITECT/ENGINEER FOR APPROVAL.
08-008	ALL EXTERIOR DOORS SHALL BE PROVIDED WITH THRESHOLDS AND WEATHER STRIPPING TYP.
08-009	ALL EXTERIOR DOORS, STORE FRONTS, AND WINDOWS SHALL BE TESTED (AS PER MANUFACTURER SPECIFICATIONS AND / OR INDUSTRY STANDARDS) FOR WATER INTRUSION. ALL EXTERIOR FENESTRATION SHALL BE WATER, HUMIDITY TIGHT TYP.
08-010	ALL INTERIOR DOORS SHALL BE STAIN-READY FINISHED OR PRE-PAINTED AND PROVIDED WITH DOOR STOP HARDWARE, AS REQUIRED.
08-100	
09-000	FINISHES
09-001	GENERAL BATHROOM FINISH SCHEDULE:1-)FLOOR: -BATHROOM:IMPERVIOUS TILE & MORTAR. -SHOWER: IMPERVIOUS, SLIP RESISTANT TILE & GROUT, OR NON-ABSORBENT SURFACE. 2)WALLS:-BATHROOM: MOISTURE / MILDEW RESISTANT PAINT ON MOISTURE RESISTANT DRYWALL (GREEN BOARD) AND/OR IMPERVIOUS TILE & GROUT ON CEMENT BOARD BACKER. -SHOWER/TUB: IMPERVIOUS TILE & GROUT, OR NON-ABSORBENT SURFACE FROM FLOOR TO CEILING OR TO A MIN. OF 72" ABOVE DRAIN, ON CEMENT BACKER. 3-)CEILING: MOISTURE / MILDEW RESISTANT PAINT ON MOISTURE RESISTANT DRYWALL (GREEN BOARD). NOTE: FIBER CEMENT, FIBER-MAT REINFORCED CEMENT, GLASS MAT GYPSUM BACKERS AND/FIBER-REINFORCED CEMENT BACKERS SHALL BE USED AS BACKERS FOR WALL TILE IN TUB AND SHOWER AREAS AND WALL PANELS IN SHOWER AREAS.
09-019	THIN NATURAL STONE VENEER / PORCELAIN TILE DECORATIVE WALL CLADDING, ON FULL BED SETTING / BONDING MIX, ON CMU / CONCRETE WALLS. PROVIDE FULL COVERAGE WITH BONDING AGENT TO ALL AREAS OF WALLS AND CONCRETE ELEMENTS TO RECEIVE STONE / TILE CLADDING. BEFORE STONE VENEER / TILE APPLICATION, APPLY BONDING AGENT TO ALL EXPOSED CONCRETE AREAS. TYP.
09-020	CERAMIC TILE FLOOR FINISH TO BE SELECTED BY OWNER, AT UPPER FLOORS ABOVE LIVING SPACES, PROVIDE UNDER TILE SOUND INSULATION MEMBRANE. ALL TILE INSTALLATION SHALL BE ON CONCRETE SLAB OR 1/2" MIN. CEMENT BACKER, TYP.
09-021	CERAMIC TILE FLOOR FINISH FOR OUTSIDE TERRACE. SHALL BE SLIP RESISTANT. TO BE SELECTED BY OWNER, TYP.
09-023	EXPOSED CONCRETE FINISH (STEEL TROWEL FINISH) W/ EPOXY PAINT FINISH. COLOR TO BE SELECTED BY OWNER, TYP.
09-030	5/8" MIN. THICK SMOOTH STUCCO FINISH, PAINTED. 3-COAT APPLICATION. PROVIDE CONTROL AND EXPANSION JOINTS AS NECESSARY TO AVOID CRACKING, AND AS PER INDUSTRY STANDARDS AND MINIMUM CODE REQUIREMENTS. PROVIDE BONDING AGENT TO ALL EXPOSED CONCRETE TO RECEIVE STUCCO FINISH.
09-040	1/2" GYPSUM WALL BOARD FINISH, PAINTED, ON FURRING STRIP / FRAMING STUDS.
09-044	PROVIDE IMPERVIOUS TILE & GROUT WALL FINISH AT SHOWERS FROM FLOOR TO CEILING OR TO A MINIMUM OF 72" ABOVE SHOWER FLOOR. PROVIDE 1/2" CEMENT BOARD SUBSTRATE FOR ALL WALL TILE INSTALLATION, TYP. FOR OPTIONAL POOL BATHROOM, PROVIDE TILE APPLICATION ON ALL WALLS, AND FROM FLOOR TO CEILING.
09-050	5/8" MIN. GYPSUM WALL BOARD CEILING FINISH, PAINTED, ON FURRING STRIPS, ON ROOF TRUSSES / FRAMING.
09-100	
10-000	SPECIALTY CONSTRUCTION
10-005	KITCHEN CABINETS AND COUNTER TOPS. TO BE SELECTED AND APPROVED BY OWNER / ID. MANUFACTURER SHALL PROVIDE SHOP DRAWINGS, DESIGN, SPECS, DETAILS, ETC. AND PROVIDE TO OWNER / ARCH. FOR APPROVAL PRIOR TO ORDERING, FABRICATION, OR INSTALLATION.
10-010	BATHROOM CABINETS, VANITIES, & COUNTER TOPS. TO BE SELECTED AND APPROVED BY OWNER. MANUFACTURER SHALL PROVIDE SHOP DRAWINGS, DESIGN, SPECS, DETAILS, ETC. AND PROVIDE TO OWNER / ARCH. FOR APPROVAL PRIOR TO ORDERING, FABRICATION, OR INSTALLATION.
10-012	CARPENTRY, MILLWORK, CABINETRY, TRIM, ETC. TO BE SELECTED AND APPROVED BY OWNER / ID. MANUFACTURER SHALL PROVIDE SHOP DRAWINGS, DESIGN, SPECS, DETAILS, ETC. AND PROVIDE TO OWNER / ARCH. FOR APPROVAL PRIOR TO ORDERING, FABRICATION, OR INSTALLATION.
10-013	CABINETS AND COUNTER TOPS. TO BE SELECTED AND APPROVED BY OWNER / ID. MANUFACTURER SHALL PROVIDE SHOP DRAWINGS, DESIGN, SPECS, DETAILS, ETC. AND PROVIDE TO OWNER / ARCH. FOR APPROVAL PRIOR TO ORDERING, FABRICATION, OR INSTALLATION.
10-030	CLOSET RACKS, SHELVES, ETC. TO BE SELECTED BY OWNER / ID, TYP.
10-040	GLASS SHOWER ENCLOSURE. PROVIDE CATEGORY II SAFETY GLASS SHOWER ENCLOSURE WITH 22" MINIMUM CLEAR OPENING DOOR.
10-057	EXISTING POOL SAFETY BARRIER FENCE / MESH. SHALL COMPLY WITH FBC RESIDENTIAL SECTION R4501.17.1 AND SECTION R4501.17.1.15.
10-100	
11-000	EQUIPMENT
11-001	REFER TO EACH TRADE FOR SPECIFICATION AND INFORMATION REGARDING EQUIPMENT, APPIANCES, ETC.
11-002	ALL EQUIPMENT, APPLIANCES, ETC. SHALL BE SELECTED AND APPROVED BY OWNER.
11-021	GAS POWERED STOVE & OVEN, TO BE SELECTED BY OWNER. REFER TO E/M/P DWGS. FOR ADDITIONAL INFORMATION.
11-030	EXHAUST HOOD, TO BE SELECTED BY OWNER. REFER TO E/M/P DWGS. FOR ADDITIONAL INFORMATION.
11-100	
13-000	CONVEYING SYSTEMS
13-100	
14-000	MECHANICAL
14-001	REFER TO MECHANICAL DWGS. FOR ADDITIONAL INFORMATION, SPECS, CALCULATIONS, REGARDING MECHANICAL EQUIPMENT & FIXTURES.
14-002	EXISTING MECHANICAL EQUIPMENT TO REMAIN AND NOT ALTERED, TYP.
14-006	MECHANICAL EQUIPMENT AHU, REFER TO MECH. DWGS. FOR SPECS.
14-100	
15-000	ELECTRICAL
15-001	REFER TO ELECTRICAL DWGS. FOR ADDITIONAL INFORMATION, SPECS, CALCULATIONS, REGARDING ELECTRICAL EQUIPMENT & FIXTURES.
15-002	ALL ELECTRICAL FIXTURES, ACCESSORIES, APPLIANCES, FINISHES, ETC. SHALL BE SELECTED AND APPROVED BY OWNER BEFORE ORDERING, MANUFACTURING, FABRICATION, OR INSTALLATION.
15-100	
16-000	PLUMBING
16-001	REFER TO PLUMBING DWGS. FOR ADDITIONAL INFORMATION, SPECS, CALCULATIONS, REGARDING ELECTRICAL EQUIPMENT & FIXTURES.
16-002	ALL PLUMBING ACCESSORIES, FIXTURES, ETC. TO BE APPROVED BY OWNER / ID BEFORE ORDERING, MANUFACTURING, OR INSTALLATION, TYP.
16-003	PLUMBING EQUIPMENT, FIXTURES, ACCESSORIES, ETC. REFER TO PLUMBING DWGS. FOR ADDITIONAL SPECS, INFORMATION, DETAILS, ETC.
16-005	BATHROOM VANITY SINK, TO BE SELECTED AND APPROVED BY OWNER. ALSO REFER TO PLUMBING DWGS. FOR ADDITIONAL SPECS.
16-010	TOILET, TO BE SELECTED AND APPROVED BY OWNER. ALSO REFER TO PLUMBING DWGS. FOR ADDITIONAL SPECS.
16-015	JACUZZI TUB. TO BE SELECTED AND APPROVED BY OWNER. ALSO REFER TO PLUMBING DWGS. FOR ADDITIONAL SPECS.
16-018	SHOWER DRAIN, TO BE SELECTED AND APPROVED BY OWNER / ID.
16-032	LAUNDRY SINK, COUNTER TOP MOUNTED. REFER TO M/E/P DWGS. FOR ADDITIONAL INFORMATION. TO BE SELECTED AND APPROVED BY OWNER / ID. TYP.
16-100	
17-000	FIRE SAFETY AND PROTECTION
17-100	

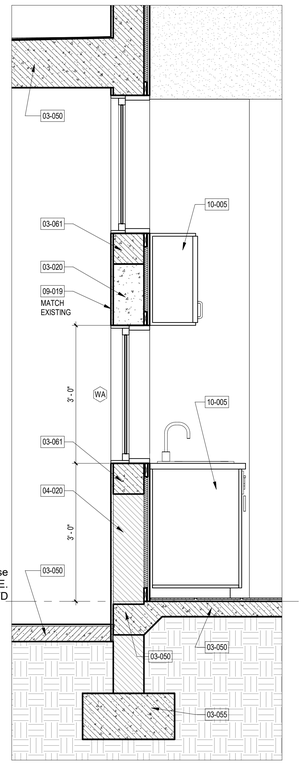

1 Section @ New Kitchen Window
3/4" = 1'-0"

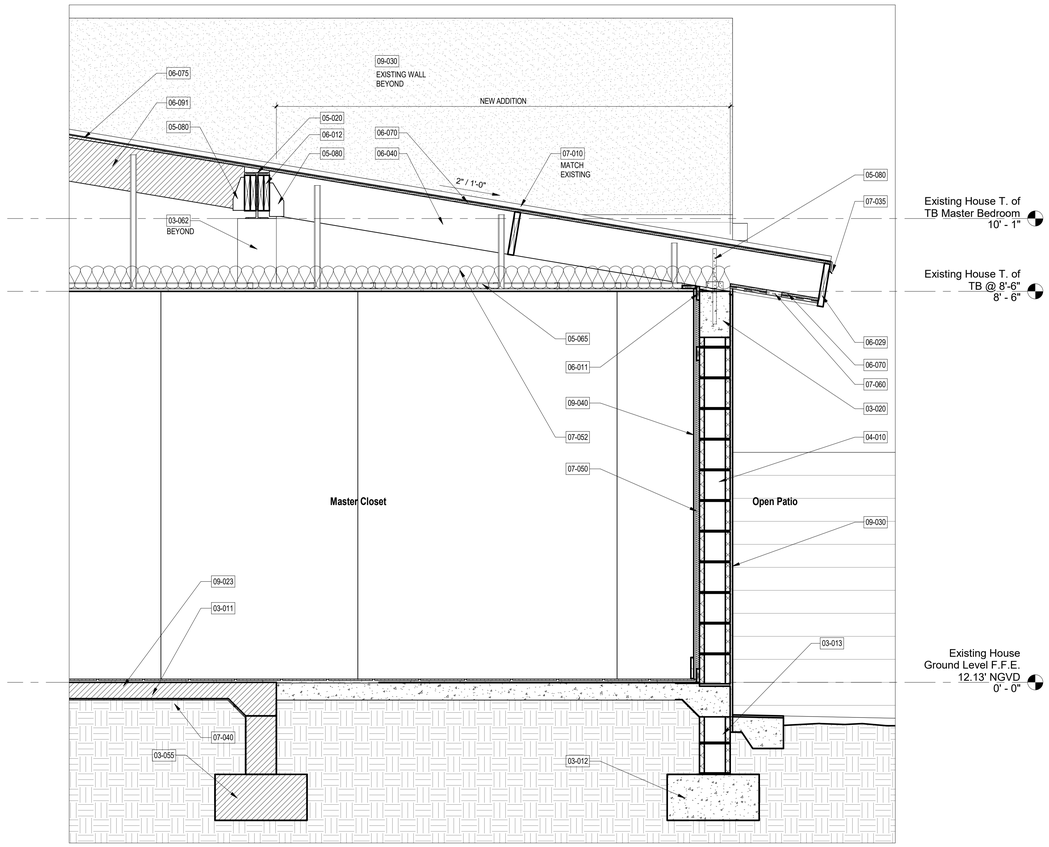

2 Section @ New Master Closet Addition-1
3/4" = 1'-0"

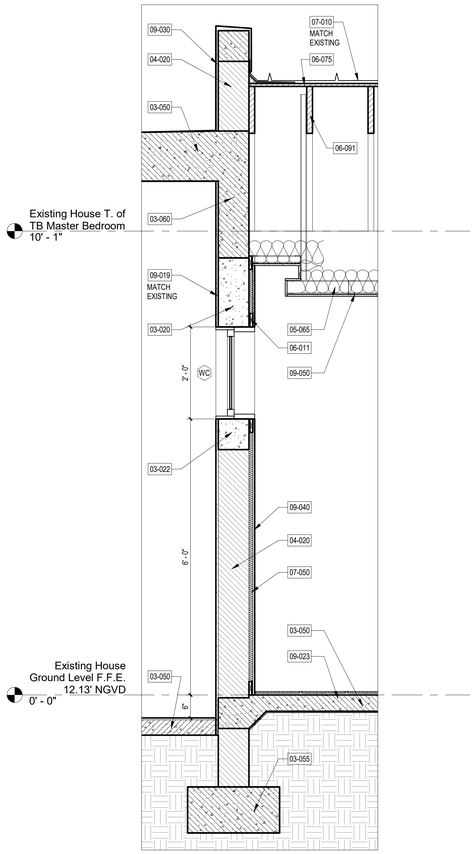

3 Section @ New Master Bedroom Window
3/4" = 1'-0"

NOVUS Archetype
architecture / interior / planning

NOVUS Archetype, LLC
12721 SW 30th ST. MIAMI, FL 33175
PH: (305) 505-6910
email: julio@novusarchetype.com
AA26001460
Qualifier: Julio Pulido, AIA
License #: AR93904
Qualifier : Salvador Ben Mitrani, NCARB
License # : AR99606

STATE OF FLORIDA · JULIO PULIDO · AR93904 · REGISTERED ARCHITECT

Julio Pulido
Digitally signed by Julio Pulido
Date: 2024.12.20 12:31:16 -05'00'

Dylan & Jamie Roy

Interior Remodeling & Addition

6783 SW 104th St Pincrest, Fl 33156

No.	Description	Date

Project number	24-011
Date	07-10-24
Drawn by	JP
Checked by	JP

SHEET TITLE

Building Sections

SHEET No.

A500

Miami Dade County Department of Regulatory and Economic Resources - Job Copy
202508506 - 5/19/2025 11:05:46 AM
A500.pdf

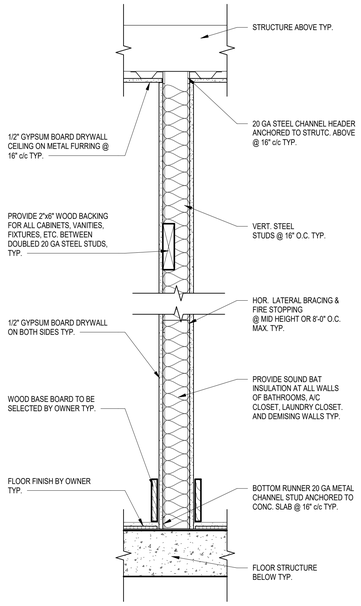

1 Typ. Interior Partition Wall Dtl.
1 1/2" = 1'-0"

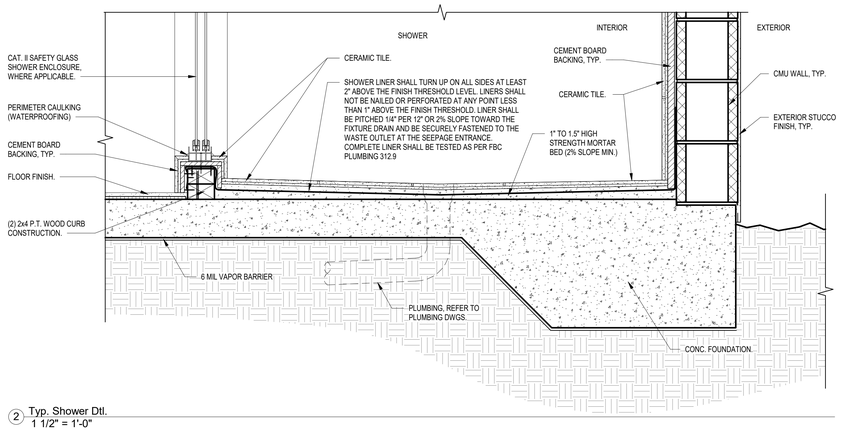

2 Typ. Shower Dtl.
1 1/2" = 1'-0"

REFER TO SHEET A500 FOR KEYNOTE SCHEDULE FOR SECTIONS & DETAILS.

NOVUS Archetype
architecture / interior / planning

NOVUS Archetype, LLC
12721 SW 30th ST. MIAMI, FL 33175
PH: (305) 505-6910
email: julio@novusarchetype.com
AA26001460
Qualifier: Julio Pulido, AIA
License #: AR93904
Qualifier : Salvador Ben Mitrani, NCARB
License # : AR99606

STATE OF FLORIDA
JULIO PULIDO
AR93904
REGISTERED ARCHITECT

Julio Pulido
Digitally signed by Julio Pulido
Date: 2024.12.20 12:31:58 -05'00'

Dylan & Jamie Roy

Interior Remodeling & Addition

6783 SW 104th St Pincrest, Fl 33156

No.	Description	Date

Project number	24-011
Date	07-10-24
Drawn by	JP
Checked by	JP

SHEET TITLE

Sections & Details

SHEET No.

A700

Miami Dade County Department of Regulatory and Economic Resources - Job Copy
20250308506 - 5/19/2025 11:05:46 AM
A700.pdf

RedGard® Waterproofing and Crack Prevention Membrane

1 Product Name

RedGard® Waterproofing and Crack Prevention Membrane

2 Manufacturer

Custom Building Products
Technical Services
10400 Pioneer Boulevard, Unit 3
Santa Fe Springs, CA 90670
Customer Support: 800-272-8786
Technical Services: 800-282-8786
Fax: 800- 200-7765
Email: contactus@dpmail.net
custombuildingproducts.com

3 Product Description

RedGard® is a ready-to-use, rapid drying, liquid applied elastomeric, waterproofing and crack prevention membrane that does not require fabric in the field, coves or corners. It can be used for all/interior or exterior commercial, industrial and residential tile and stone installations. Easily applied with roller, trowel or sprayer producing a continuous water and moisture barrier with outstanding adhesion. Bonds directly to metal and drains of PVC, stainless steel and ABS. Reduces concrete moisture vapor transmission to protect moisture sensitive tile, stone and other flooring types.
RedGard meets ANSI A118.10 for waterproofing membranes and ANSI A118.12 High Performance (up to 1/8" (3 mm) for crack isolation membranes. Meets Uniform Plumbing Code specifications for use as a shower pan liner. Listed with IAPMO R & T. File #4244 UPC®, ICC-ES ESR-1413. Meets low perm requirements for steam room vapor barriers per ASTM E-96 Procedure E.

Key Features

- Ready to use - Quick dry formula
- Fabric not required
- Listed with IAPMO for use as a shower pan liner
- Elastomeric – Isolates cracks up to 1/8" (3mm)
- Meets steam shower requirements for low perm membrane
- Manages concrete moisture vapor emissions up to 12lbs / 85%RH
- Rated for Extra Heavy Service Conditions per TCNA/ASTM C627
- Flood test immediately after drying

Uses

- Interior surfaces / exterior concrete and masonry surfaces
- Shower pans, showers, tub surrounds
- Swimming pools, fountains, water features
- Spas, hot tubs, steam showers, steam rooms
- Industrial, commercial and residential applications
- Commercial /residential kitchens, food processing areas
- Exterior balconies and decks over occupied/unoccupied spaces
- Exterior facades

Suitable Substrates

- Concrete, cement mortar, masonry
- Cement Backerboard
- Post-Tension Concrete*
- Gypsum-based underlayment (min. 2000 psi compressive strength)
- Lightweight Concrete (min. 2000 psi compressive strength)
- Existing ceramic tile and resilient flooring
- Drywall (interior dry areas)
- Coated Glass Mat Water-Resistant Gypsum Backer Board
- APA/CAMPLY rated EXP1/Exterior Glue Plywood and OSB/Oriented Strand Board (interior, dry areas only for water protection and crack isolation applications)
- Bonds directly to metals*
- Floor heating systems*
- Pipe penetrations/transitions - PVC, ABS, copper, brass and stainless-steel (abrasion required)

* Deflection requirements and material selection can affect success of the tile assembly. Contact Custom Building Products Technical Services for cautions, limitations and recommendations.

Composition of Product

RedGard® is a liquid-applied elastomeric waterproofing material that cures to form a monolithic membrane.

Benefits of Product in the Installation

- Thin/low profile membrane, from 0.015–0.038" (0.4–0.96 mm) thickness after cure. (Thickness is determined by application)
- Easy to use and can be applied by roller, trowel or airless sprayer
- Reduces curing time with quick-dry formula
- Rated for extra heavy-duty service (TCNA/ASTM C627)
- Isolates cracks up to 1/8" (3 mm)
- Reduces efflorescence from substrates
- Meets Uniform Plumbing Code specifications for use as a shower pan liner IAPMO/File #4244 UPC®, ICC-ES ESR-1413
- GreenGuard Gold Certification # 135952-20
- LEED EQc 4.2 Low VOC Emitting Materials/MRc5 Regional Materials
- Non-flammable / No solvents

CUSTOM

Published Date:7/7/2021

RedGard® Waterproofing and Crack Prevention Membrane / TDS-104

RedGard® Waterproofing and Crack Prevention Membrane

Limitations to the Product

- Ambient and surface temperatures must be above 40°F (4°C) at time of installation and for 72 hours after application.
- Tile over membrane within 72 hours in exterior applications to avoid extended exposure to ultraviolet rays. Alternately, tent area or cover with sun blocking sheeting, or a flat application of high performance thinset mortar or apply a one-time additional coat of liquid prior to 72 hrs. to extend timeframe another 72hrs.
- Existing concrete slabs on-ground relative humidity levels ≤85%*
- Do not apply over wet surfaces or surfaces subject to hydrostatic pressure.
- Use Crack Buster® Pro Crack Prevention Mat Underlayment to relocate tile joints over saw cuts/control joints in concrete slabs. Contact Technical Services for detailed instructions to accommodate waterproofing over concrete slab joints.*
- Do not use as an adhesive.
- Some glass tile manufactures do not recommend use of a membrane behind their glass tile products.
- Do not use pre-mixed adhesives over membrane.
- Do not apply over unstable substrate conditions such as laitance, weak or powdery surfaces.
- Do not use over pressure treated wood surfaces.
- Do not use as a wear surface: the membrane must be covered with tile or other permanent flooring.
- Do not expose membrane to solvent-based materials.
- Compatible with water-based paints only.

*Contact Technical Services for other conditions not listed and/or additional information.

Packaging

- 1-gallon (3.78 L) pail
- 3.5-gallon (13.2 L) pail

4 Technical Data Applicable Standards

Material Standards

- Exceeds American National Standards Institute/ANSI A118.10 Load Bearing, Bonded, Waterproofing Membranes for Thin-Set Ceramic Tile and Dimension Stone Installation
- Exceeds American National Standards Institute/ANSI A118.12 Crack Isolation Membranes for Thin-Set Ceramic Tile and Dimension Stone Installation
- ASTM C627 Standard Test Method for Evaluating Ceramic Floor Tile Installation Systems Using the Robinson-Type Floor Tester
- ASTM D638 Standard Test Method for Tensile Properties of Plastics ASTM E-96 Standard Test Methods for Water Vapor Transmission of Materials/Method E
- Conforms to Wisconsin's performance requirements for "safing material" as established by Comm. 84.30 (6)(f) of the Wisconsin Administrative Code; CA Section 01350 and passes CDPH V1.2-2017.
- Uniform Plumbing Code specifications for use as a shower pan liner Listed with IAPMO R & T. File #4244 UPC®, ICC-ES ESR-1413

Installation Standards

- American National Standards Institute (ANSI) ANSI A108.01, A108.02, A108.13 , A108.17
- Tile Council of North America (TCNA) TCNA Handbook for Ceramic Tile Installation, includes methods EJ171(movement joints), Methods F125 & F125A for crack isolation and crack transference protection
- Meets/exceeds requirements as listed in Specifications Guide 09 30 00 Tile Installation Manual published by the Terrazzo, Tile & Marble Association of Canada/TTMAC Approvals

Approvals

RedGard® has tested and complies with Uniform Plumbing Code and International Plumbing Code standards for use as a shower pan liner per IAPMO Research and Testing, Inc., File No. 4244. RedGard® has tested and complies with International Building Code (IBC), International Residential Code (IRC) and International Plumbing Code (IPC) standards for water resistance per ICC Evaluation Service, ESR-1413. RedGard® conforms to "safing material" requirements established by the Wisconsin Administrative Code, Chapter Comm 84.30-6f.

- GREENGUARD Gold Certificate # 135952-420
- LEED EQc4.1 & 4.2 Low VOC Emitting Materials/MRc5 Regional Materials
- ASTM C627 (Robinson) for extra heavy service rating
- ASTM E-96 Method E, meeting requirements of <0.5 perms
- Los Angeles Department of Building and Safety - per LAMC 98.0502

CUSTOM

Published Date: 4/15/2021

RedGard® Waterproofing and Crack Prevention Membrane / TDS-104

RedGard® Waterproofing and Crack Prevention Membrane

Technical Chart

Property	Test Method	Requirement	Typical Results
Fungus Resistance	A118.10 Section 4.1	No Growth	Pass
Seam Strength	A118.10 Section 4.2	> 8 lbs. per 1" >16 lbs. per 2"	>16 lbs. per 2"
Breaking Strength	A118.10 Section 4.3	> 170 psi	484 psi (34kg/cm²)
Dimensional Stability	A118.10 Section 4.4	+/- 0.7%	0.05%
Waterproofness	A118.10 Section 4.5	No Water Penetration	Pass at 25 mils dry
Steam Shower Requirement	ASTM E-96 Method E	< 0.5 perms	0.35 perms at 30 mils dry
Shear Bond Strength to Cement Mortar			
Four Week Shear Strength	A118.10 Section 5.5	> 50 psi	267 psi (18.8 kg/cm²)
Shear Strength After Water Immersion	A118.10 Section 5.4	> 50 psi	89 psi (6.3 kg/cm²)
System Crack Resistance			
Standard Performance	A118.12 Section 5.4	> 1/16" and < 1/8"	Pass at 30mils dry
High Performance	A118.12 Section 5.4	> 1/8"	Pass at 30mils dry
Point Load	A118.12 Section 5.2	> 1000 lbs.	> 1000 psi
Robinson Test ASTM C627	A118.12 Section 5.3	As Specified	14 Cycles; Extra Heavy
VOC Test Results			
VOC Content	EPA Method 24	SQAQMD Rule 113/CARB SCM 2019 (<100 g/L)	<5 g/L (0% CARB VOC)
VOC Emissions	Complies with CA Section 01350 & CDPH V1.2-2017		Compliant (TVOC< 0.5 mg/m3 or less

Environmental Consideration

Custom® Building Products is committed to environmental responsibility in both products produced and in manufacturing practices. Use of this product may contribute to LEED® certification.

5 Instructions

General Surface Prep

WEAR IMPERVIOUS GLOVES, such as nitrile, and eye protection when handling product.

All surfaces must be structurally sound, clean, dry and free from contaminants such as grease, oil, dirt, dust, curing compounds, waxes, sealers, efflorescence, or any other foreign matter.

Concrete must be fully cured and have an effective under-slab vapor retarder/barrier. Any existing flooring must bewell bonded and stripped of old finish. All substrates should support anticipated live and dead loads in design/performance and meet all international, local, regional or provincial code requirements.

Exterior and wet areas must have proper sloping to drains without divots that would affect drainage. All surfaces must be structurally sound, clean, dry and free from contaminants that would prevent a proper bond. Concrete must be troweled smooth but not burnished (highly polished) and cured for 28 days. Most existing surfaces are to be scarified and flattened and all defects must be repaired. Dormant cracks should be treated in accordance with TCNA F125 or TCNA F125A methods.

Concrete and Masonry Surfaces

All surfaces must be structurally sound, clean, dry and free from contaminants such as grease, oil, dirt, dust, curing compounds, waxes, sealers, efflorescence, or any other foreign matter. Concrete must be fully cured and have an effective underslab vapor retarder/barrier. Any existing flooring must be well bonded and stripped of old finish.

All substrates should support anticipated live and dead loads in design/performance and meet all international, local, regional or provincial code requirements.

Bonding to Lightweight Cement and Gypsum Surfaces

Lightweight or gypsum-based materials must obtain a minimum of 2000 psi (13.8 MPa) compressive strength at the recommended cure time. The underlayment must be sufficiently dry and properly cured to the manufacturer's specifications for permanent, non-moisture permeable coverings. Surfaces to be covered must be clean, structurally sound and subject to deflection not to exceed the current ANSI standards. Expansion joints must be installed in accordance with local building codes and ANSI/TCNA guidelines.

Prime all surfaces to receive RedGard® with properly applied manufacturer's sealer or with a primer compatible with RedGard®, consisting of 1-part RedGard®, diluted with 4 parts clean, cool water. In a clean pail, mix at low speed (<300rpm). Apply the diluted mixture using a clean, fine head bristle broom to scrub in the primer solution at a rate of 300 ft/gallon (7.5 M/L). Keep the surface of the substrate wet for at 3-5 minutes during application to ensure adequate and even distribution / penetration of primer coat. Allow primer coat to dry, then apply at least one coat of "undiluted" RedGard® before adhering tile, floor patch or other flooring material applications. See Coverage Section for square foot rates by application.

RedGard® as a Vapor Barrier

When used as a vapor barrier over concrete, apply one full coat (70 sq. ft. per gallon)where vapor transmission is up to 8 lbs. per 1000 sq. ft. per day and two full coats (70 sq. ft. per gallon each coat) where vapor transmission is up to 12 lbs. per 1000 sq. ft. per day. Refer to ASTM F1869 for more information on Vapor Transmission Testing.

CUSTOM

Published Date: 4/15/2021

RedGard® Waterproofing and Crack Prevention Membrane / TDS-104

RedGard® Waterproofing and Crack Prevention Membrane

Movement Joint Placement

All tile assemblies, including those using Porcelain tiles, expand and contract with temperature changes and/or exposure to moisture and are subject to movement by the underlying structure due to live and dead loads. For these reasons, do not bridge joints with tile when they are designed to experience movement. Carry these types of joints from the substrate through the tile in locations, widths and frequency recommended by the Tile Council of North America (TCNA) or Terrazzo, Tile & Marble Association of Canada (TTMAC). Follow ASTM C1193 guidelines using CUSTOM® Commercial100% Silicone Sealant or other suitable sealant applying the sealant as flush as possible with the tile edges.

RedGard® can be used to waterproof movement joints using proper methods incorporating suitable sealant and other industry approved expansion joint materials as illustrated below. Assure that movement joints are free of debris and mortar and install using the appropriate specified method.

CEJ171 W - Expansion Joint

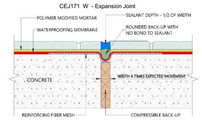

See CUSTOM® details at links below or on our website for reference:

CEJ 171 W - Expansion Joint
CEJ 171 AW - Construction Joint
CEJ 171 BW - Contraction Joint
CEJ 171 CW - Expansion Joint
CEJ 171 DW - Isolation -Expansion Joint
CEJ 171 EW - Expansion Joint, Cement Mortar, Bonded
CEJ 171 FW - Ceramic Movement Joint
CEJ 171 GW - Perimeter Joint
CEJ 171 HW - Expansion Joint, Cement Mortar, Cleavage Membrane
CEJ 171 IW - Perimeter Joint
CEJ 171 IW - Perimeter Movement Joints
CEJ 171 KW - Movement Joint in Tile and Backerboard
CEJ 171 LW - Generic Movement Joint with Backerboard
CEJ 171 GCW - Generic Movement Joint Concrete or Masonry Wall
CEJ 171 ECW - Expansion Joint – Concrete or Masonry Wall
CEJ 171 MWV - Movement Joint – Reinforced Mortar Bed
CEJ171 BMW - Movement Joint – Bonded Mortar Bed
CEJ 171 SJBW – Steam Shower/Room Slip Joint– Cement Backerboard Unit
CEJ 171 SJMW – Steam Shower/Room Slip Joint– Reinforced Mortar Bed
CEJ171 WPM - Waterproofing Movement Joint Details - Combined

Application of Product

For all applications, use RedGard®, a thinset mortar or suitable patch to fill cracks to 1/8" (3 mm) before applying RedGard® liquid. In high temperatures, windy conditions and when applying over very porous substrates, lightly dampen the surface or use a diluted mixture of RedGard® as a primer coat prior to the normal application. In a separate container, dilute1-part RedGard® with 4 parts water and mix until well blended. Use either a paint brush, a 3/8" (10 mm) rough-textured, synthetic roller or airless sprayer to apply the primer coat to the entire area to be waterproofed. The membrane appearance is pink when wet and dries to a dark red color. It typically takes 1-1.5 hours to turn completely red. After the first coat turns red, inspect the film for integrity and fill any voids or pinholes with additional material and apply second coat. RedGard® as a Waterproof Membrane

Coat corners and intersections of the floors and walls, extending >2" (5 cm) on either side with RedGard® liquid using either a paint brush, a 3/8"(10 mm) rough-textured, synthetic roller or a 3/16"-1/4" (56 mm) V-notch trowel. For extra seam protection, embed CUSTOM® Waterproofing Reinforcing Tape into the liquid for changes of plane and over gaps >1/8" (>3mm). Allow these areas to dry before re-applying.

For general waterproofing, apply RedGard® at a rate or 110 sq. ft per gallon in each coat. NOTE: A minimum of two coats is required when using a roller or brush to assure that continuous coverage is achieved. If using a roller, apply a continuous, even film with overlapping strokes. Apply the second coat at right angles to the first coat for best results. When using a trowel, spread the liquid with the trowel held at a >30° angle, and then flatten the ridges. Over a solid wall surface, a minimum 15 mils thickness is required above a tub surround or shower floor cove. The membrane appearance is pink when wet and dries to a dark red color. It typically takes 1-1.5 hours to turn completely red. After the first coat turns red, inspect the film for integrity and fill any voids or pinholes with additional material and apply second coat.

To meet the waterproofing requirements of ANSI A118.10 and IAMPO, two coats should be applied at a rate of 80 sq. ft. per gallon each coat. In all cases, the wet film thickness of any coat should not exceed 40mils.

An airless sprayer may be used for the waterproofing application. The sprayer must produce between 1900 - 2300 psi, with a flow rate of 1.0 - 1.5 GPM and must have a tip orifice size of 0.025 - 0.029.
See CUSTOM Technical Bulletin TB36 for instructions.

CUSTOM

Published Date: 4/15/2021

RedGard® Waterproofing and Crack Prevention Membrane / TDS-104

RedGard® Waterproofing and Crack Prevention Membrane

RedGard® at Drains

Drains are to be securely fastened to prevent movement. Prior to applying RedGard®, substrate is to be properly sloped toward drain flange. Remove any contaminants on drain flange that might inhibit bonding and protect threaded bolt holes with tape or inserting bolts before applying liquid.

Cut and fit pieces of reinforcing fabric (approximately 3" long.) to contour and encompass drain flange. Apply a coat of RedGard® overlapping transition from substrate or mortar bed to drain flange using a brush. Embed reinforcing fabric into RedGard® liquid. Overlap saturated fabric and use the brush to keep it flat. Continue applying RedGard® to adjacent areas designated to be waterproofed. Allow first application of RedGard® to dry, then recoat all areas to create a monolithic membrane. After final coat is dry, clamp collar to membrane and tighten.

RedGard® Circular Drain Assembly Detail

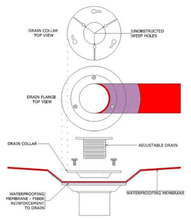

RedGard®, Mortar Bed & Circular Drain (CB421)

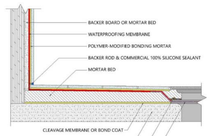

RedGard®, Mortar Bed & Linear Drain

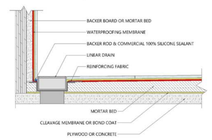

NOTE: Download the illustrated installation details referenced aboveby clicking on the links above or go to Custom Building Products.com/TSD.

- RedGard® Circular Drain Assembly Detail
- RedGard® - Mortar Bed & Circular Drain (CB421)
- RedGard® - Mortar Bed & Linear Drain

CUSTOM

Published Date: 4/15/2021

RedGard® Waterproofing and Crack Prevention Membrane / TDS-104

RedGard® Waterproofing and Crack Prevention Membrane

RedGard® as a Crack Prevention Membrane

RedGard® can be applied using either a V-notched trowel, a 3/8" (9.5 mm) rough textured roller, or a bristle brush. Fill non-structural cracks using either RedGard®, thinset mortar or patch. Then apply RedGard liquid at least 6" beyond any tile that will be bridging the crack. When using a notched trowel, immediately use the flat side and flatten the ridges to form a continuous, even coat of material.

For continuous general crack isolation, cover the entire substrate with one coat of RedGard® applied at a rate of 100 sq. ft. per gallon.

To meet specification requirements for ANSI A118.12, apply two coats of RedGard at a rate of 50 sq. ft. per gallon per coat.

NOTE: Cracks ≥1/8" or displaying differential movement may be due to structural movement and should be assessed and/or treated by an appropriate structural engineer or consultant.

Curing of Product

RedGard® is dry when it turns solid red, with no visible pink color. Typically, drying time is 1-1.5 hours for each coat. After the second coat is applied and both coats are fully dry, the application area can be flood tested. Drying time can be extended to as much as 12 hours in conditions of very low surface and/or ambient temperatures and when applying in high humidity.

Protection

Maintain ambient and surface temperatures above 40°F (4°C) at time of installation and for 72 hours after application. Care should be taken to prevent the membrane from becoming contaminated by bond inhibiting materials, solvents or being punctured after application. Cover RedGard with tile, an additional coat of liquid, a flat application of mortar or UV blocking sheeting if not to be tiled within 72 hours when exposed to sunlight. Protect RedGard from water intrusion that could occur behind or beneath the applied membrane if drip edges and/or flashing is not in place at the time of application.

Tile and Stone Installation

Install tile or stone with a Custom® Building Products polymer-modified mortar that meets ANSI A118.4 or A118.15 standards based on application requirements.

Cleaning of Equipment

Clean tools and hands with water before the material dries. Clean all spray equipment immediately after use.

Health Precautions

IMPORTANT: Read carefully before using. WEAR IMPERVIOUS GLOVES, such as nitrile, and eye protection.

WARNING: EYE & SKIN IRRITANT. May be harmful if swallowed. Do not mix with other chemical products. Avoid contact witheyes and prolonged contact with skin. Do not breathe in vapors. Do not take internally. Immediately wash contaminated body and clothing thoroughly. Use in well-ventilated areas. Wear a NIOSH compliant vapor respirator, especially in poorly ventilated areas.

If eye or skin contact occurs:
Rinse cautiously with water for several minutes. Remove contact lenses, if present and easy to do. Continue rinsing.

If inhaled: Remove person to fresh air and keep comfortable for breathing. If swallowed: Rinse mouth. Do NOT induce vomiting. Immediately seek medical advice or attention if symptoms are significant or persist. In Emergency: 1-800-535-5053. **Contains: Styrene-butadiene polymer, limestone, and ammonium hydroxide.** Before handling read Safety Data Sheet at www.custombuildingproducts.com.

KEEP OUT OF REACH OF CHILDREN.

WARNING: This product can expose you to chemicals including crystalline silica, which is known to the State of California to cause cancer. For more information go to www.P65Warnings.ca.gov.

6 Availability & Cost

Location	Item Code	Size	Color	Package
USA	LQWAF1	1 gallon (3.78 L)	Pink	Pail
USA	LQWAF3	3.5 gallon (13.2 L)	Pink	Pail
Canada	CLLQWAF1	1 gallon (3.78 L)	Pink	Pail
Canada	CLLQWAF3	3.5 gallon (13.2 L)	Pink	Pail

7 Product Warranty

Obtain the applicable **LIMITED PRODUCT WARRANTY** at www.custombuildingproducts.com/product-warranty or send a written request to Custom Building Products, Inc., Five Concourse Parkway, Atlanta, GA 30328, USA.

Manufactured under the authority of Custom Building Products, Inc.© 2017 Quikrete International, Inc.

When RedGard® Waterproofing and Crack Prevention Membrane is used as a part of a qualifying full installation system of CUSTOM products, the installation can qualify for up to a lifetime system warranty. CUSTOM will repair and/or replace, at its discretion, the affected area of the system. For more information, find details and limitations to this warranty at custombuildingproducts.com.

8 Product Maintenance

Properly installed product requires no special maintenance. Do not use as a wear surface.

9 Handling & Storage

Protect from freezing. Store in a cool, dry area.

10 Technical Services Information

For technical assistance, contact Custom technical services at 800-272- 8786 or visit custombuildingproducts.com.

CUSTOM

Published Date: 4/15/2021

RedGard® Waterproofing and Crack Prevention Membrane / TDS-104

RedGard® Waterproofing and Crack Prevention Membrane

Coverage

Size	Coverage
RedGard as Crack Prevention Membrane:	
1 Gallon (3.78 L)	100 sq. ft (9.3 M2)
3.5 Gallon (13.2 L)	350 sq. ft. (32.5 M2)
RedGard as Crack Prevention Membrane meeting ANSI A118.12	
1 Gallon (3.78 L)	25 sq. ft. (2.3 M2)
3.5 Gallon (13.2 L)	88 sq. ft. (8.2 M M2)
RedGard as Waterproof Membrane:	
1 Gallon (3.78 L)	55 sq. ft. (5.1 M2)
3.5 Gallon (13.2 L)	192 sq. ft. (17.8 M2)
RedGard as IAPMO Pan Liner meeting ANSI A118.10:	
1 Gallon (3.78 L)	40 sq. ft. (3.7 M2)
3.5 Gallon (13.2 L)	140 sq. ft. (13 M2)

Chart for estimating purposes. Coverage may vary based on installation practices and jobsite conditions.

CUSTOM

Published Date: 4/15/2021

Under Tile Waterproofing System. (Or Approved Equal)
1 12" = 1'-0"

NOVUS Archetype
architecture / interior / planning
NOVUS Archetype, LLC
12721 SW 30th ST. MIAMI, FL 33175
PH: (305) 505-6910
email: julio@novusarchetype.com
AA26001460
Qualifier: Julio Pulido, AIA
License #: AR93904
Qualifier : Salvador Ben Mitrani, NCARB
License # : AR99606

STATE OF FLORIDA
JULIO PULIDO
AR93904
Digitally signed by Julio Pulido
Date: 2024.12.20 12:32:52 -05'00'

Dylan & Jamie Roy

Interior Remodeling & Addition

6783 SW 104th St Pincrest, Fl 33156

No.	Description	Date

Project number	24-011
Date	07-10-24
Drawn by	JP
Checked by	JP

SHEET TITLE

Details & Specifications

SHEET No.

A710

Miami Dade County Department of Regulatory and Economic Resources - Job Copy
202500850 6 - 5/19/2025 11:05:46 AM
A710.pdf

PERMITTING HOURS
8:00 AM TO 2:00 PM
MONDAY – FRIDAY

CONTACT INFORMATION
T: 305.234.2121 F: 305.234.2133
building@pinecrest-fl.gov
INSPECTIONS: 305.234.2111
INSURANCE RENEWALS: renewals@pinecrest-fl.gov

VILLAGE OF PINECREST
Building & Planning Department
12645 Pinecrest Parkway,
Pinecrest, Florida 33156

MASTER PERMIT #_____

SUB PERMIT #_____

INSTRUCTIONS

STEP 1. APPLICATION WHICH MUST BE SIGNED BY THE PROPERTY OWNER & QUALIFIER; BOTH SIGNATURES MUST BE NOTARIZED. PERMITS/PLANS DROP OFF CLOSES @ 2:00 P.M.

STEP 2. SUBMIT THE COMPLETED APPLICATION WITH ALL NECESSARY DOCUMENTS TO THE BUILDING AND PLANNING DEPARTMENT FOR PROCESSING. REFER TO PERMIT CHECKLIST ONLINE AT: HTTPS://WWW.PINECREST-FL.GOV/Government/Building/Apply-for-a-Permit/All-Permits.

STEP 3. PROJECTS OVER $2,500 REQUIRE RECORDED NOTICE OF COMMENCEMENT POSTED AT JOBSITE PRIOR TO COMMENCEMENT OF CONSTRUCTION.

APPLICATION

JOB ADDRESS: 6783 SW 104 ST PINECREST, FL 33156 **FOLIO #: 20-**5002.000 .1100

DESCRIPTION OF WORK: Int Remod of Residence(5,188 Sq.Ft) Addittion of 112 **FLOOD ZONE:** X AH7 AE7 AE10 AE11

VALUE OF WORK: $150,000.00 **PROJECT SQ. FT.:** 5,300 **NO. OF FLOORS:** _____

CONTACT: Ricardo Romero **EMAIL:** ricardo@rrpermit.com **PHONE:** 786 201 3324

PERMIT TYPE	(✓)	PERMIT CHANGE	(✓)	IMPROVEMENT TYPE	(✓)	CATEGORY	(✓)
BUILDING	✔	REVISION		NEW CONSTRUCTION		COMMERCIAL	
ELECTRICAL		RENEWAL		ALTERATION	✔	RESIDENTIAL	✔
MECHANICAL		CHG OF CONTRACTOR		ADDITION	✔	APPRAISED BLDG. VALUE	
PLUMBING		CHG OF ARCH/EGR		DEMOLITION		$2199345	
ZONING							

PROPERTY OWNER	
NAME	DYLAN ROY , JAMIE ROY
ADDRESS	6783 SW 104 ST PINECREST, FL 33156
PHONE	
EMAIL	

CONTRACTOR	
COMPANY	CREARA COMPANY
QUALIFIER	ANDRES CORTES
ADDRESS	300 ARAGON AVE SUITE 212
LICENSE #	
PHONE	
EMAIL	

ARCHITECT	
NAME	
LICENSE #	
PHONE	
EMAIL	

ENGINEER	
NAME	
LICENSE #	
PHONE	
EMAIL	

OFFICE USE ONLY

☐ *PERMIT CLERK REVIEW COMPLETE.* *UPFRONT FEE AMOUNT PAID $*_____ *(if applicable)*

FEES TYPE	AMOUNT	FEES TYPE	AMOUNT		SECTION	BY	DATE
SCAN FEE ($3/PG)		ZONING/PLANNING			ZONING/PLANNING		
BUILDING FEES		SOLID WASTE			ELECTRICAL		
STORMWATER REVIEW		MUNICIPAL			MECHANICAL		
MIAMI-DADE COUNTY		STORM DRAINAGE			PLUMBING		
FL DBR		IMPACT ADMIN			PUBLIC WORKS		
FL DCA		SIDEWALK			STRUCTURAL		
FINES		CONCURRENCY			STORMWATER		
CERT. OF OCCUPANCY		EXPEDITE- REWORK			BUILDING		
CONSTRUCTION SIGN		TOTAL DUE:			BUILDING OFFICIAL		

Miami Dade County Department of Regulatory and Economic Resources - Job Copy
2025008506 - 5/19/2025 11:05:46 AM
Application form Pinecrest.pdf

CONDITIONS OF APPROVAL

☐ *CONDITION DESCRIPTION:*

IMPORTANT NOTICES

1. DO NOT BEGIN ANY WORK WITHOUT HAVING RECEIVED YOUR VALIDATED PERMIT AND PERMIT CARD. APPLYING FOR A PERMIT DOES NOT GRANT THE RIGHT TO BEGIN CONSTRUCTION. HOURS OF CONSTRUCTION ARE LIMITED TO MONDAY THROUGH FRIDAY FROM 7:00 A.M. TO 6:30 P.M., SATURDAYS FROM 8:00 A.M. TO 4:00 P.M. NO CONSTRUCTION ON SUNDAYS OR STATE HOLIDAYS. NO INSPECTIONS WILL BE CONDUCTED ON WEEKENDS OR HOLIDAYS.
2. ALL CONSTRUCTION AND/OR DEMOLITION AREAS MUST BE MAINTAINED IN A CLEAN, NEAT AND SANITARY CONDITION FREE FROM CONSTRUCTION DEBRIS.
3. STREETS AND NEIGHBORING PROPERTIES SHALL BE KEPT FREE FROM DIRT AND DEBRIS.
4. SWALES MUST BE PROTECTED FROM BEING DAMAGED BY EQUIPMENT OR VEHICLES.
5. CONSTRUCTION TRAILERS ARE PROHIBITED ON SINGLE FAMILY RESIDENTIAL CONSTRUCTION SITES. OTHER CONSTRUCTION MAY HAVE A TRAILER, WHICH REQUIRES A SEPARATE PERMIT.
6. PORTABLE TOILETS FOR A CONSTRUCTION SITE REQUIRE A SEPARATE PERMIT.
7. DO NOT DISCHARGE WATER INTO THE RIGHT OF WAY OR STORM DRAINS WITHOUT APPROVAL FROM THE BUILDING AND PLANNING DEPARTMENT.
8. EQUIPMENT AND MATERIALS SHALL BE STORED WITHIN YOUR PROPERTY, NOT ON PUBLIC RIGHT OF WAY.
9. FLORIDA DEPARTMENT OF HEALTH APPROVAL IS REQUIRED FOR APPLICATIONS INVOLVING SEPTIC TANKS. DEPARTMENT OF ENVIRONMENTAL RESOURCES MANAGEMENT (DERM) AND/OR MIAMI DADE WATER AND SEWER DEPARTMENT (MDWASD) APPROVAL IS REQUIRED FOR APPLICATIONS INVOLVING SEWERS AND WATER.
10. THE ISSUANCE OF A DEVELOPMENT PERMIT BY THE VILLAGE DOES NOT IN ANY WAY CREATE ANY RIGHT ON THE PART OF AN APPLICANT TO OBTAIN A PERMIT FROM A STATE OR FEDERAL AGENCY AND DOES NOT CREATE ANY LIABILITY ON THE PART OF THE VILLAGE FOR ISSUANCE OF THE PERMIT IF THE APPLICANT FAILS TO OBTAIN REQUISITE APPROVALS OR FULFILL THE OBLIGATIONS IMPOSED BY A STATE OR FEDERAL AGENCY OR UNDERTAKES ACTIONS THAT RESULT IN A VIOLATION OF STATE OR FEDERAL LAW. IN ADDITION, ALL APPLICABLE STATE AND FEDERAL PERMITS SHALL BE OBTAINED BY THE APPLICANT BEFORE COMMENCEMENT OF THE DEVELOPMENT.

AFFIDAVIT

APPLICATION IS HEREBY MADE TO OBTAIN A PERMIT TO DO WORK AND INSTALLATION AS INDICATED. I, THE OWNER OF THE PROPERTY, CERTIFY THAT ALL WORK WILL BE PERFORMED TO MEET THE STANDARDS OF ALL LAWS REGARDING CONSTRUCTION IN THE VILLAGE OF PINECREST. I UNDERSTAND THAT SEPARATE PERMITS ARE REQUIRED FOR ELECTRICAL, PLUMBING, POOL, EXTERIOR DOOR, MECHANICAL, WINDOW, FENCE, DRIVEWAY, ROOFING, SHUTTERS AND SIGNS AND THERE MAY BE ADDITIONAL PERMITS REQUIRED FROM OTHER GOVERNMENTAL AGENCIES.

I, THE OWNER OF THE PROPERTY, HAVE DISCLOSED ALL INFORMATION RELATED TO ANY WORK AT THE PROPERTY PERFORMED IN THE PRIOR ONE (1) YEAR TO THE BUILDING OFFICIAL. FURTHER, I AM FULLY AWARE THAT IF THE CUMULATIVE COST OF WORK TO MY HOME OR BUSINESS UNDER THIS AND ANY OTHER PERMIT DURING THE ONE (1) YEAR PERIOD BEGINNING ON THE DATE OF THE FIRST IMPROVEMENT OR REPAIR TO THE STRUCTURE SUBSEQUENT TO JANUARY 1, 2015 EXCEEDS FIFTY PERCENT (50%) OF THE MARKET VALUE OF THE STRUCTURE, THE ENTIRE STRUCTURE MUST MEET THE PRESENT FEDERAL FLOOD CRITERIA FOR FINISHED FLOOR ELEVATION PLUS 1 FOOT. I AM ALSO FULLY AWARE THAT IF THE WORK AREA TO MY HOME OR BUSINESS UNDER THIS AND ANY OTHER PERMIT EQUALS OR EXCEEDS FIFTY PERCENT (50%) OF THE BUILDING AREA, THEN THE ALTERATION MUST CONFORM TO THE CURRENT CODE REQUIREMENTS OF THE FLORIDA BUILDING CODE, EXISTING BUILDINGS SECTION 604 ALTERATION LEVEL 3.

I, THE OWNER OF THE PROPERTY, UNDERSTAND THAT A PERMIT APPLICATION IS SUBJECT TO DENIAL AND A VALIDATED PERMIT OR PERMIT CARD IS SUBJECT TO REVOCATION OR MODIFICATION BASED UPON APPLICABLE DEEDS, COVENANTS, DECLARATIONS, EASEMENTS AND ANY OTHER LEGAL RESTRICTION. BY ISSUING A PERMIT, THE VILLAGE MAKES NO REPRESENTATION AS TO THE EXISTENCE OR VALIDITY OF ANY PROPERTY RESTRICTION.

WARNING TO OWNER: YOUR FAILURE TO RECORD A NOTICE OF COMMENCEMENT MAY RESULT IN YOU PAYING TWICE FOR IMPROVEMENTS TO YOUR PROPERTY. IF YOU ARE SPENDING MORE THAN $2,500 OR INTEND TO OBTAIN FINANCING, YOU MAY WISH TO CONSULT WITH YOUR ATTORNEY OR LENDER BEFORE RECORDING YOUR NOTICE OF COMMENCEMENT. THE NOTICE OF COMMENCEMENT MUST BE RECORDED AT: 22 N.W. 1ST STREET, 1ST FLOOR (305) 275-1155 EXTENSION 6. ONCE RECORDED, THE NOTICE OF COMMENCEMENT MUST BE POSTED AT THE JOB SITE IN ACCORDANCE WITH SECTION 713.35 OF FLORIDA STATUTES

STATE OF FLORIDA, COUNTY OF MIAMI-DADE

SIGNATURE OF OWNER

DYLAN ROY

PRINT NAME SWORN TO AND SUBSCRIBED BEFORE ME THIS 22 DAY OF JANUARY, 2025.

SIGNATURE OF NOTARY PUBLIC, STATE OF FLORIDA

SEAL:

MAY GANNI MY COMMISSION EXPIRES JULY 28, 2025 #HH 158347 Bonded thru Notary Public Underwriters NOTARY PUBLIC, STATE OF FLORIDA

PERSONALLY KNOWN ___ OR, PRODUCED IDENTIFICATION ✓

TYPE OF IDENTIFICATION PRODUCED: FDL R000-170-71-229-0

FDL R000-170-71-229-0

STATE OF FLORIDA, COUNTY OF MIAMI-DADE

SIGNATURE OF CONTRACTOR QUALIFIER

ANDRES CORTES

PRINT NAME SWORN TO AND SUBSCRIBED BEFORE ME THIS 23 DAY OF JANUARY, 2025.

SIGNATURE OF NOTARY PUBLIC, STATE OF FLORIDA

SEAL:

MAY GANNI MY COMMISSION EXPIRES JULY 28, 2025 #HH 158347 Bonded thru Notary Public Underwriters NOTARY PUBLIC, STATE OF FLORIDA

PERSONALLY KNOWN ✓ OR, PRODUCED IDENTIFICATION ___

TYPE OF IDENTIFICATION PRODUCED: ___

Miami Dade County Department of Regulatory and Economic Resources - Job Copy
2025008506 - 5/19/2025 11:05:46 AM
Application form Pinecrest.pdf

MIAMI-DADE COUNTY

DEPARTMENT OF REGULATORY AND ECONOMIC RESOURCES

http://www.miamidade.gov/building/home.asp

2/28/2025 8:44:44 AM

Contact Name:	Deborah Machado
Contact Email:	DEBORAH@RRPERMIT.COM
Tracking Number:	2025008506
Reviews to rework:	WASA
Comments:	

MIAMI-DADE COUNTY

DEPARTMENT OF REGULATORY AND ECONOMIC RESOURCES

http://www.miamidade.gov/building/home.asp

3/5/2025 1:38:52 PM

Contact Name:	Deborah Machado
Contact Email:	DEBORAH@RRPERMIT.COM
Tracking Number:	2025008506
Reviews to rework:	OTDS
Comments:	

MIAMI-DADE COUNTY

DEPARTMENT OF REGULATORY AND ECONOMIC RESOURCES

http://www.miamidade.gov/building/home.asp

4/15/2025 8:35:36 AM

Contact Name:	Deborah Machado
Contact Email:	DEBORAH@RRPERMIT.COM
Tracking Number:	2025008506
Reviews to rework:	HRS
Comments:	

Miami-Dade Department of Regulatory and Economic Resources

CONTACT INFORMATION FOR PERMIT APPLICATION

FIRST NAME *(print clearly)*	LAST NAME *(print clearly)*
DEBORAH	MACHADO
MOBILE PHONE	**OFFICE/HOME PHONE**
7863483506	

EMAIL *(required so you can be notified on the status of your plans)*

DEBORAH@RRPERMIT.COM

COMMENTS *(If you are submitting a municipal plan, please provide the municipal process number(s) and ensure the municipal application is in the office set of plans.)*

BL2025-0125

PLANS *(check all that apply)*

Please indicate if plans qualify for the following expedited plan reviews:

☐ GOV'T PROJECT/DEPT_____ ☐ GREEN BLDG* *(new construction only)* ☐ PACE PROJECT*

☐ AFFORDABLE/WORKFORCE HOUSING* ☐ ECONOMIC SIGNIFICANCE* ☐ CONCIERGE

(*Pursuant to Ordinance 99-140; Ordinance 05-115; and Ordinance 08-51. Project may have additional requirements.)

REQUESTED PLAN REVIEWS *(check all that apply for rework only)*

☐ ALL	☐ BLDG/HCAP	☐ ELEC	☐ ENRG	☐ FIRE	☐ ROOF
☐ LANDSCAPING	☐ MECH	☐ PLUM	☐ PWKS	☐ PWCC	☐ SIGN
☐ STRU	☐ ZNPR	☑ WASD	☑ PWIF	☐ LPGX	☐ SHOP DRAWING
☑ DERM CORE	☐ DERM AIR	☐ DERM AIRPORT	☐ DERM ASBESTOS	☐ DERM COASTAL	☐ DERM FLOOD
☐ DERM GREASE	☐ DERM INDUSTRIAL	☐ DERM PAVING & DRAINAGE	☐ DERM POLLUTION	☐ DERM PRE-TREATMENT	☐ DERM SOLID WASTE
☐ DERM TANKS	☐ DERM TREES	☐ DERM WATER TREATMENT	☐ DERM WETLANDS	☐ PERMIT BY AFFIDAVIT CHECK	☐ SHORT TERM EVENT AFFIDAVIT CHECK
☐ DOH/HRS					

OPTIONAL PLAN REVIEWS *(check all that apply)*

☐ BLDG ☐ ELEC ☐ MECH ☐ PLUM ☐ STRU

OPR DERM **INITIAL** REVIEWS *(check all that apply)*

☐ DERM CORE ☐ DERM SPECIALTY *(You will be notified after core review is complete for additional fees)*

OPR DERM **REWORK** *(OPR for specialty only available at PIC)*

☐ TREE	☐ GREASE	☐ ASBESTOS	☐ COASTAL	☐ AIR	☐ PAVING & DRAINAGE
☐ TANKS	☐ INDUSTRIAL	☐ WETLAND	☐ PRE-TREATMENT	☐ CORE	☐ FLOOD

FOR OFFICE USE ONLY

To be completed by Permit and Occupancy Representative or Plans Processing Specialist

APPLICATION DATE	CLERK NAME	ARRIVAL TIME
PROCESS NUMBER	**PROCESS NUMBER**	**PROCESS NUMBER**

☐ RE-ISSUE ☐ PLAN REVISION ☐ REWORK ☐ SHOP DRAWING

Miami Dade County Department Of Regulatory and Economic Resources - Job Copy
2025008506 - 5/19/2025 11:05:46 AM
CONTACT SHEET MDC.pdf

ELECTRICAL GENERAL NOTES

1.– OVERALL INSTALLATION: THE INSTALLATION SHALL COMPLY WITH THE NATIONAL ELECTRICAL CODE (NEC–2020), THE FLORIDA BUILDING CODE (FBC–2023, 8th EDITION), AND ANY OTHER APPLICABLE FEDERAL, STATE AND LOCAL CODES.

2.– COMPLIANCE: WORKMANSHIP, MATERIALS AND INSTALLATION SHALL BE IN STRICT ACCORDANCE WITH THE APPLICABLE EDITION OF THE NEC, NFPA, NEMA, ASTM, OSHA, HRS HEALTH AGENCIES, AND OTHER APPLICABLE NATIONAL, STATE, AND LOCAL CODES AND PERTAINING REGULATIONS ESTABLISHED BY THE RULING AUTHORITY HAVING JURISDICTION. CONTRACTORS SHALL ALSO MEET THE REQUIREMENTS OF OTHER STANDARDS WHERE SUCH REQUIREMENTS ARE MORE STRICT THAN THOSE STANDARDS CITED ABOVE.

3.–MATERIALS: CONTRACTOR SHALL PROVIDE ALL NEW MATERIALS OF AMERICAN MANUFACTURE, BEARING THE UNDERWRITER'S LABORATORY (UL) LABEL AS APPLICABLE.

4.– PERMITS AND INSURANCE: CONTRACTOR SHALL SECURE AND PAY FOR ALL PERMITS, FEES, TAXES, INSPECTIONS, TESTS, FINES AND OTHER ITEMS AS REQUIRED FOR THE INSTALLATION OF THE COMPLETE ELECTRICAL SYSTEMS AS OUTLINED HEREIN AND SHOWN ON PLANS. CONTRACTOR SHALL PROVIDE ALL REQUIRED INSURANCE FOR PROTECTION AGAINST PUBLIC LIABILITY AND PROPERTY DAMAGE FOR THE DURATION OF THE WORK.

5.– EXISTING CONDITIONS: BEFORE BIDDING, THE CONTRACTOR SHALL VISIT THE JOB SITE AND ASCERTAIN ALL EXISTING CONDITIONS WHICH WILL AFFECT HIS WORK. FAILURE TO DO SO WILL NOT BE ACCEPTED AS A REASON FOR REQUESTING EXTRA PAY WHERE THE EXISTING CONDITIONS RESULT IN EXTRA MATERIALS OR ANY EXISTING CONDITIONS FOUND BY THE CONTRACTOR WHICH WILL ADVERSELY AFFECT THE WORK SHALL BE IMMEDIATELY BE BROUGHT TO THE ATTENTION OF THE ARCHITECT/ENGINEER. CORRECTION OF ANY DEFECTS SHALL BE COMPLETELY WITHOUT ADDITIONAL CHARGE AND SHALL INCLUDE REPLACEMENTS OR REPAIR OF ANY OTHER PHASE OF THE INSTALLATION WHICH MAY HAVE BEEN DAMAGED THEREBY.

6.–CUTTING AND PATCHING: MAJOR CUTTING, PATCHING & PAINTING REQUIRED BY THIS CONTRACT WILL BE PERFORMED IN A NEAT AND WORKMANLIKE MANNER. ALL SURFACES SHALL BE RETURNED TO ORIGINAL CONDITIONS AFTER THE INSTALLATION OF THE EQUIPMENT.

7.–THE ELECTRICAL INSTALLATION SHALL MEET ALL STANDARD REQUIREMENTS OF THE LOCAL ELECTRIC UTILITY AND THE TELEPHONE COMPANY.

8.–LOAD DATA IS BASED ON INFORMATION PROVIDED TO THE ENGINEER AT THE TIME OF DESIGN. ALL EQUIPMENT AND PANEL SIZES SHALL BE VERIFIED BEFORE ORDERING.

9.–CIRCUITS SHOWN ON PLANS ARE USED TO DETERMINE LOAD DATA AND PANEL SIZES. THE CONTRACTOR SHALL PROVIDE CIRCUIT ROUTING TO SUIT THE JOB CONDITIONS. ANY FIELD CHANGES IN CIRCUITING SHALL BE REFLECTED ON THE SET OF AS–BUILT DRAWINGS AND SHALL BE PROVIDED TO THE A/E FOR RECORDING WITH THE CITY.

10.–FURNISH AND INSTALL ALL FIXTURES AS CALLED FOR ON THE PLANS OR AS SELECTED BY OWNER/ARCHITECT.

11.–ALL CONDUCTORS SHALL BE RUN IN CONDUIT, U.O.N.
EXEPTION–WIRING THROUGHOUT THE RESIDENCE CAN BE
NONMETALLIC SHEATHED CABLE (ROMEX) PROPERLY PROTECTED
FROM MECHANICAL AND TEMPERATURE DAMAGE.(WITH OWNER
APPROVAL.)

12.–INSTALL 1/2" EMPTY CONDUIT TO ALL TELEPHONE/DATA OUTLETS. PROVIDE PULL WIRE.

13.– INTERFERENCE: THE CONTRACTOR SHALL COORDINATE HIS WORK WITH OTHER TRADES SO THAT INTERFERENCE WITH EXISTING CONDITIONS, CONDUITS, PIPING, EQUIPMENT, ARCHITECTURAL AND STRUCTURAL MEMBERS BE AVOIDED.

14.– PLANS: DRAWINGS ARE BASICALLY DIAGRAMS INTENDED TO DEPICT APPROXIMATELY EQUIPMENT LOCATIONS AND ARRANGEMENTS, NOT TO SHOW EVERY MINOR DETAIL. PLANS SHALL NOT BE SCALED TO DETERMINE EXACT LOCATION AND DIMENSIONS.

15.–ALL ELECTRICAL EQUIPMENT SHALL BE INSTALLED IN ACCESIBLE AREAS ONLY AND ABOVE BASE FLOOD ELEVATION.

16.–CONTRACTOR IS RESPONSIBLE FOR PROVIDING ALL WIRING, BREAKER AND FUSES SIZES IN ACCORDANCE WITH A/C EQUIPMENT NAMEPLATES, IF DIFFERENT FROM THOSE SPECIFIED ON DRAWINGS, AS WELL AS ANY FEEDER CHANGES BEING AFFECTED BY THIS CHANGE. CONTRACTOR SHALL MAKE ABOVE MENTIONED CHANGES AT NO EXTRA COST. ANY FIELD CHANGES IN CIRCUITING SHALL BE REFLECTED ON THE SET OF AS–BUILT DRAWINGS AND SHALL BE PROVIDED TO THE A/E FOR RECORDING WITH THE CITY.

17.–ELECTRICAL CONTRACTOR SHALL COORDINATE WITH MECHANICAL CONTRACTOR TO PROVIDE ALL REQUIRED J–BOXES AND CONDUITS FOR INSTALLATION OF CONTROL WIRING. LOW VOLTAGE CONTROL WIRING AND THEIR TERMINATION IS THE RESPONSIBILITY OF THE MECHANICAL CONTRACTOR.

18.–ELECTRICAL METER AND PANEL LOCATIONS SHOWN MAY VARY DEPENDING ON SERVICE ENTRANCE LOCATION. ANY FIELD CHANGES IN CIRCUITING SHALL BE REFLECTED ON THE SET OF AS–BUILT DRAWINGS AND SHALL BE PROVIDED TO THE A/E FOR RECORDING WITH THE CITY.

19.–ALL LIGHTING FIXTURES TO BE SELECTED BY THE OWNER/ARCHITECT, U.O.N. AND SHALL BE INSTALLED BY THIS CONTRACTOR.

20.–BALANCE ALL PHASES AT EACH PANEL AND MDP/SERVICE MAINS.

21.–ELECTRICAL CONTRACTOR SHALL ASSURE THAT ALL FEATURES OF SERVICE COMPLY WITH THE POWER COMPANY'S REQUIREMENTS AND SHALL MAKE ALL NECESSARY ARRANGEMENTS WITH POWER COMPANY FOR SERVICE. ALL EQUIPMENT NOT FURNISHED AND/OR INSTALLED BY THE POWER CO. IS TO BE FURNISHED AND INSTALLED BY THE ELECTRICAL CONTRACTOR.

22.–WHERE MORE THAN ONE DEVICE IS INDICATED AT ANY LOCATION, THESE SHALL BE GANGED UNDER ONE COMMON COVER.

23.–QUANTITY AND LOCATION OF ELECTRICAL, TELEPHONE/DATA & TV OUTLETS, LIGHTS AND LIGHT CONTROLS, SHALL BE ADJUSTED TO SUIT THE OWNER'S REQUIREMENTS AS PER OWNER/ARCHITECT INSTRUCTIONS. SAID ARRANGEMENTS SHALL NOT BE IN CONFLICT WITH APPLICABLE CODES.

24.–ELECTRICAL CONTRACTOR SHALL VERIFY REQUIREMENTS, EXACT LOCATIONS, TYPE AND ARRANGEMENT OF OUTLETS FOR ALL ELECTRICAL FIXTURES, APPLIANCES AND EQUIPMENT, PRIOR TO INSTALLATION.

25.–PROVIDE A TYPEWRITTEN DIRECTORY FOR EACH ELECTRICAL PANEL.

26.–CONTRACTOR SHALL FURNISH AS–BUILT DRAWINGS TO THE OWNER UPON COMPLETION OF WORK AND PRIOR TO FINAL PAYMENT.

27.– OUTLET BOXES SHALL BE PRESSED STEEL IN DRY LOCATIONS, CAST ALLOY WITH THREADED HUBS IN WET/DAMP LOCATIONS AND SPECIAL ENCLOSURES AS REQUIRED FOR OTHER CLASSIFIED AREAS AND SHALL CONFORM TO NEMA STANDARDS. PLASTIC BOXES MAY BE USED WHERE PERMITTED UNDER APPLICABLE CODES AND ORDINANCES.

28.–ALL DISCONNECT SWITCHES SHALL BE SIZED BY NEC REQUIREMENTS TO ACCOMODATE THE EQUIPMENT SERVED, INCLUDING REJECTION CLIPS AND FUSES, WHEN APPLICABLE. SWITCHES SHALL BE HP RATED, QUICK–MAKE, QUICK–BREAK, IN NEMA 1 ENCLOSURES FOR INDOOR AND NEMA 3R FOR OUTDOOR.

NOTES

1.– AC SHALL HAVE BUILT–IN BREAKER.
2.– ALL SINGLE/CO STATION SMOKE DETECTOR WITHIN THE HOUSE SHALL BE INTERCONNECTED AS PER NFPA 72 ART. 8–1.4.1.6
3.– ALL SINGLE STATION SMOKE/CO DETECTOR SHALL BE POWERED BY 120V POWER AND SHALL BE CONNECTED TO BRANCH CIRCUIT AHEAD OF ANY SWITCH.
4.– ALL SINGLE STATION SMOKE/CO DETECTOR SHALL HAVE BATTERY BACK–UP.
5.– ALL SINGLE STATION SMOKE/CO DETECTORS SHALL BE INSTALLED MIN 3' FROM ANY A/C REGISTER. CONTRACTOR TO VERIFY IN FIELD.
6.– COORDINATE EXACT LOCATION OF ALL DEVICES WITH ARCH/OWNER.
7.– HANGING FIXTURES & FANS MUST BE SUPPORTED AS PER NEC 314–27D/422–18.
8.–JACUZZI SHALL HAVE AN ACCESS PLATE OR COVER AS PER NEC 680–73. MIN SIZE 20"W x 15"H.
ALL METAL PIPING SYSTEM, METAL PARTS OF ELECTRIC EQUIPMENTS, AND PUMP MOTORS ASSOCIATED WITH THE JACUZZI SHALL BE BONDED TOGETHER WITH A COPPER BONDING JUMPER, INSULATED, COVERED, OR BARE, NOT SMALLER THAN #8 AWG SOLID, AS PER NEC 680–74.
9.– FIXTURES LOCATED IN WET LOCATIONS SHALL BE LISTED FOR THAT PURPOSE.
10.–CONTRACTOR TO PROVIDE PANEL SCHEDULE AT EACH PANEL INDICATING ALL CKTS CONNECTED.
11.–CONTRACTOR SHALL LABEL PANELS AND DISCONNECT .
EX: PANEL "A", PANEL "A" DISCONNECT ETC.
12.–FIXTURES WITH DIRECT CONTACT W/INSULATION MUST BE RATED IC AS PER NEC 410–65 (C).
13.–ALL FLUORESCENT FIXTURES MUST BE ENERGY EFFICIENT. ALL CEILING FIXTURES MUST HAVE AN IN LINE FUSE (THERMAL PROTECTOR).
14.–ALL LIGHTING FIXTURES MUST BE LISTED BY A NATIONAL RECOGNIZED TESTING LABORATORY (UL)

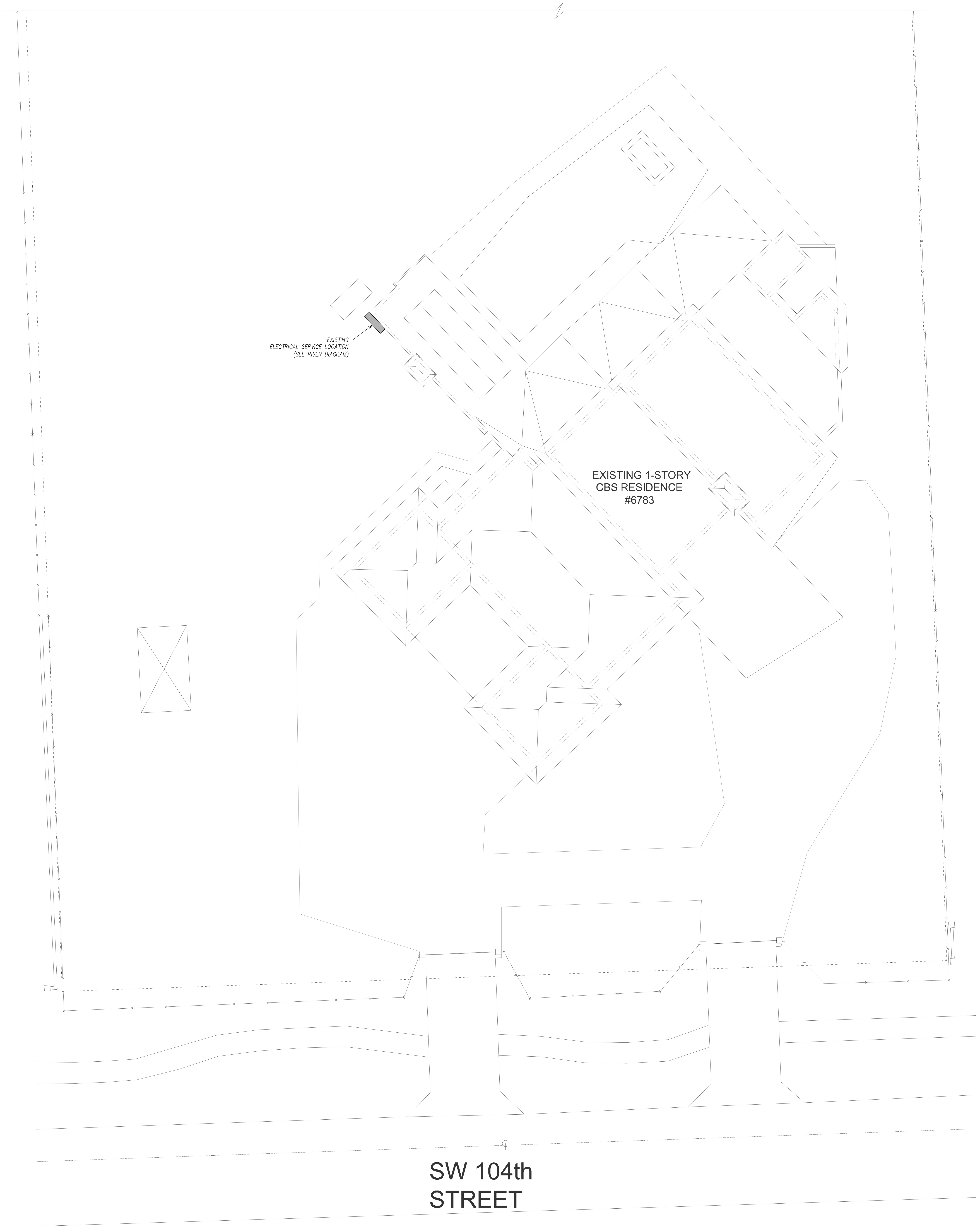

ELECTRICAL SITE PLAN
SCALE: 3/32" = 1'-0"
0 4' 8' 16'

NOVUS Archetype
architecture / interior / planning
NOVUS Archetype, LLC
12721 SW 30th ST. MIAMI, FL 33175
PH: (305) 505-6910
email: julio@novusarchetype.com
AA26001460
Qualifier: Julio Pulido, AIA
License #: AR93904
Qualifier : Salvador Ben Mitrani, NCARB
License # : AR99606

ACO DESIGN LLC.
MECHANICAL, ELECTRICAL & PLUMBING ENGINEERING DESIGN
PH: (786) 234-7046
E-mail: gorgoy127@hotmail.com.com
Address: 106 Florida Blvd. Miami FL 33144
Qualifier: Ernesto Rodriguez P.E. # 58155

Dylan & Jamie Roy

Interior Remodeling & Addition

6783 SW 104th St Pinecrest, Fl 33156

No.	Description	Date

Project number	24-011
Date	10-24-2024
Drawn by	O.G.
Checked by	E.R.

ERNESTO RODRIGUEZ LICENSE No. 58155 STATE OF FLORIDA PROFESSIONAL ENGINEER

NOT VALID FOR CONSTRUCTION OR BIDDING WITHOUT SIGNATURE & CITY APPROVAL STAMPS

Digitally signed by Ernesto Rodriguez Date: 2024.12.20 10:07:06 -05'00'

This item has been digitally signed and sealed by Ernesto Rodriguez P.E. on the date adjacent to the seal. Printed Copies of this document are not considered signed and sealed and the signature must be be verified on any electronic copies

PLANS ARE PROTECTED UNDER THE COPYRIGHT LAWS OF FLORIDA:
ALL RIGHTS RESERVED
CONTRACTOR SHALL VERIFY AND BE RESPONSIBLE FOR ALL DIMENSIONS AND CONDITIONS ON THE JOB. THE DESIGN PROFESSIONAL MUST BE NOTIFIED IN WRITING OF ANY VARIATION FROM THE PLANS. ALL IDEAS DESIGN ARRANGEMENTS AND PLANS INDICATED OR REPRESENTED BY THIS DRAWINGS ARE OWNED BY AND THE PROPERTY OF THE DESIGN PROFESSIONAL AND WERE CREATED EVOLVED AND DEVELOPED FOR USE ON AND IN CONNECTION WITH THE SPECIFIED PROJECT. ANY CHANGES TO THESE PLANS WITHOUT THE WRITTEN APPROVAL OF THE DESIGN PROFESSIONAL OR ANY CONSTRUCTION EXECUTED FROM THESE PLANS WITHOUT EXPRESSED APPROVAL OF ACO DESIGN SHALL AUTOMATICALLY RENDER THE DESIGN PROFESSIONAL AND ACO DESIGN HARMLESS TO ANY LIABILITY CLAIMS, SUIT OR LITIGATION BY ANY INTERESTED PARTIES OF THE PROJECT. NO PART THEREOF OF THESE PLANS SHALL BE COPIED OR REPRODUCED BY ANY MEANS, OR USED IN CONNECTION WITH ANY WORK OTHER THAN FOR THE SPECIFIC PROJECT FOR WHICH THEY HAVE BEEN PREPARED WITHOUT WRITTEN CONSENT OF THE DESIGN PROFESSIONAL.

SHEET TITLE

ELECTRICAL SITE PLAN

SHEET No.

E100

Miami Dade County Department of Regulatory and Economic Resources - Job Copy
2025008506 - 5/19/2025 11:05:46 AM
E100.pdf

ELECTRICAL LEGEND

- 20 A., 120., V., DUPLEX RECEPTACLE,GROUNDING TYPE, U.O.N. MOUNTED 18" A.F.F. OR AS DIRECTED BY ARCHITECT.
- 20A, 120V GFCI DUPLEX RECEPTACLE.
- 250V SPECIAL PURPOSE RECEPTACLE.
- LIGHTING SWITCH @ 48" AFF.
- 3-WAY LIGHTING SWITCH @ 48" AFF.
- SAFETY DISCONNECT SWITCH.
- ELECTRIC PANEL.
- EXHAUST FAN.
- SINGLE STATION SMOKE DETECTOR W/BATTE BACKUP AND INTERCONNECTED.
- S/CO SINGLE STATION SMOKE/CARBON MONOXIDE DETECTOR W/BATTE BACKUP AND INTERCONNECTED.
- TV OUTLET.
- PHONE/DATA OUTLET. PROVIDE MUD RING AND 3/4"C STUBBED ABOVE CEILING.
- RECESSED CEILING MOUNTED FIXTURE.
- SURFACE OR PENDANT MOUNTED FIXTURE.
- WALL /PEDESTAL MOUNTED LIGHT.
- LED STRIP LIGHT

c = ABOVE THE COUNTER.
VP = VAPOR PROOF.
WP = WEATHER PROOF.
E = EXISTING TO REMAIN.
R = EXISTING TO BE RELOCATED.

NOTE-1:
ALL NEW 120-VOLT, SINGLE-PHASE, 15- AND 20-AMPERE BRANCH CIRCUITS SUPPLYING OUTLETS INSTALLED IN DWELLING UNIT FAMILY ROOMS, DINING ROOMS, LIVING ROOMS,PARLORS, LIBRARIES, DENS, BEDROOMS, KITCHEN, LAUNDRIES, SUN ROOMS, RECREATION ROOMS, CLOSETS, HALLWAYS, OR SIMILAR ROOMS OR AREAS SHALL BE PROTECTED BY A LISTED ARC FAULT CIRCUIT INTERRUPTER, COMBINATION-TYPE, INSTALLED TO PROVIDE PROTECTION OF THE BRANCH CIRCUIT. (2014 NEC. 210.12A)

NOTE-2:
IN ALL AREAS SPECIFIED IN NOTE-1, ALL 125-VOLT, 15 AND 20 AMPERE RECEPTACLES SHALL BE LISTED TAMPER RESISTANT RECEPTACLES.NEC-2014-406.12

NOTE:
FRAMES OF ELECTRIC CLOTHES DRYERS, ELECTRIC RANGES, AND OUTLET OR JUNCTION BOXES THAT ARE PART OF THE CIRCUIT FOR THESE APPLIANCE SHALL BE CONNECTED TO THE EQUIPMENT GROUNDING CONDUCTOR IN THE MANNER SPECIFIED BY NEC-250.134 OR 250.138.

NOTE:
STAIR ILLUMINATION SHALL COMPLY WITH FLORIDA RESIDENTIAL CODE R303.7, MIN. 1F.C. AT FLOOR LEVEL ON TREADS AND LANDINGS.

NOTE: 75% OF NEW LAMPS TO BE HIGH EFFICIENCY AS PER FBC.E.-404

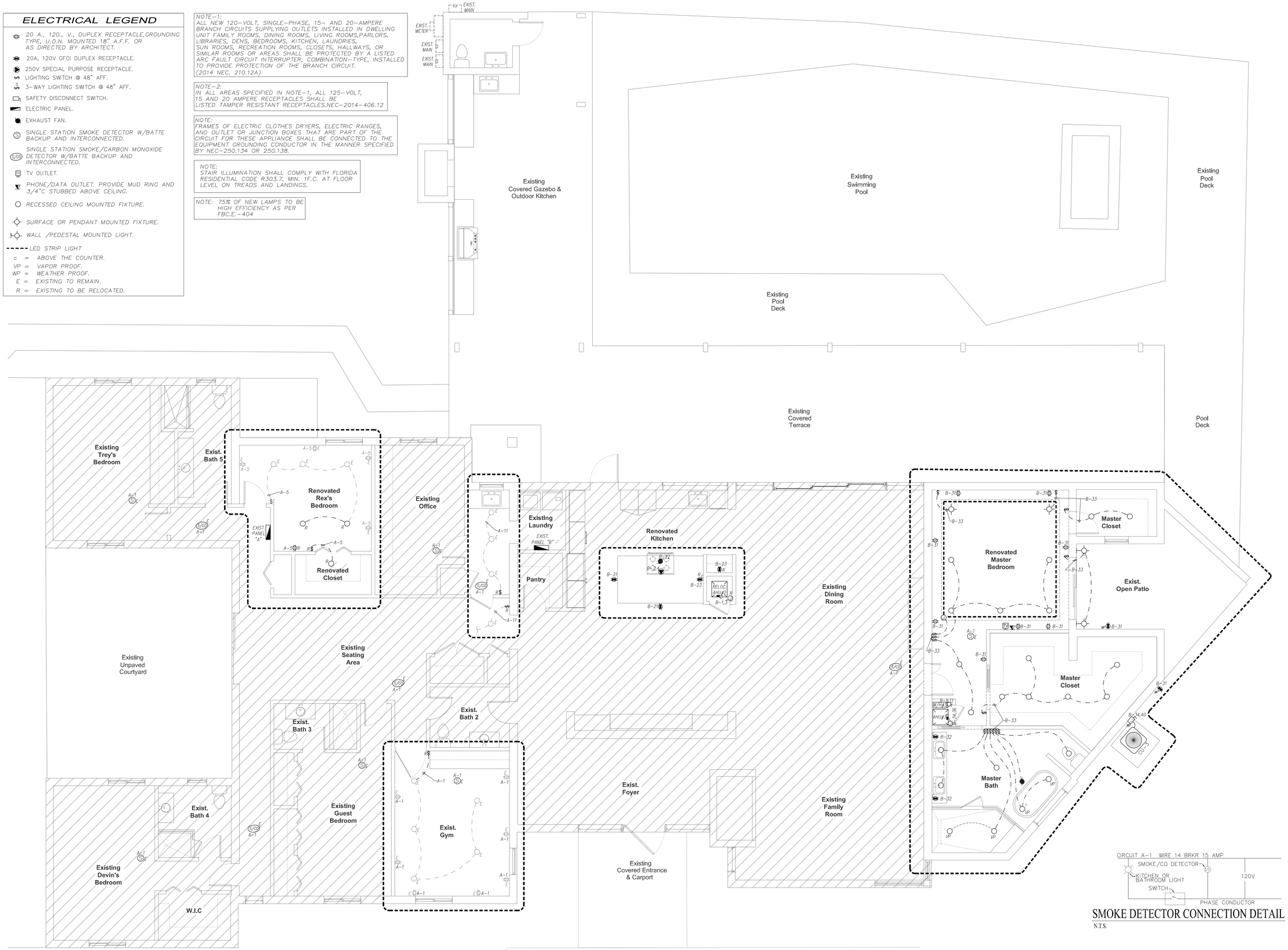

ELECTRICAL FLOOR PLAN
SCALE: 1/4" = 1'-0"
0 4' 8' 16'

SMOKE DETECTOR CONNECTION DETAIL
N.T.S.

NOVUS Archetype
architecture / interior / planning
NOVUS Archetype, LLC
12721 SW 30th ST, MIAMI, FL 33175
PH: (305) 505-6910
email: julio@novusarchetype.com
AA26001460
Qualifier: Julio Pulido, AIA
License #: AR93904
Qualifier : Salvador Ben Mitrani, NCARB
License # : AR99606

ACO DESIGN LLC.
MECHANICAL, ELECTRICAL & PLUMBING ENGINEERING DESIGN
PH: (786) 234-7046
E-mail: gorgoy127@hotmail.com.com
Address: 106 Florida Blvd, Miami FL 33144
Qualifier: Ernesto Rodriguez P.E. # 58155

Dylan & Jamie Roy

Interior Remodeling & Addition

6783 SW 104th St Pinecrest, Fl 33156

No.	Description	Date

Project number	24-011
Date	10-24-2024
Drawn by	O.G.
Checked by	E.R.

ERNESTO RODRIGUEZ LICENSE No. 58155 STATE OF FLORIDA PROFESSIONAL ENGINEER

NOT VALID FOR CONSTRUCTION OR BIDDING WITHOUT SIGNATURE & CITY APPROVAL STAMPS

Digitally signed by Ernesto Rodriguez
Date: 2024.12.20 10:06:22 -05'00'

This item has been digitally signed and sealed by Ernesto Rodriguez P.E. on the date adjacent to the seal. Printed Copies of this document are not considered signed and sealed and the signature must be verified on any electronic copies

PLANS ARE PROTECTED UNDER THE COPYRIGHT LAWS OF FLORIDA: ALL RIGHTS RESERVED.
CONTRACTOR SHALL VERIFY ALL DIMENSIONS AND CONDITIONS ON THE JOB. THE DESIGN PROFESSIONAL MUST BE NOTIFIED OF ANY VARIATION FROM THE PLANS. ALL IDEAS, DESIGN ARRANGEMENTS AND PLANS INDICATED OR REPRESENTED BY THESE PLANS, WRITTEN OR SHOWN, ARE THE PROPERTY OF THE DESIGN PROFESSIONAL AND WERE CREATED, EVOLVED AND DEVELOPED FOR USE ON AND IN CONNECTION WITH THE SPECIFIED PROJECT. ANY CHANGES TO THESE PLANS WITHOUT THE WRITTEN CONSENT OF THE DESIGN PROFESSIONAL, AND ANY USE OF THESE PLANS ON OTHER PROJECTS WITHOUT EXPRESSED APPROVAL OF ACO DESIGN SHALL AUTOMATICALLY RENDER THE DESIGN PROFESSIONAL AND ACO DESIGN INVALIDATE TO ANY LIABILITY CLAIMS. ALL IDEAS, DESIGN ARRANGEMENTS AND PLANS INDICATED OR REPRESENTED BY THESE PLANS SHALL NOT BE COPIED OR REPRODUCED BY ANY MEANS, OR USED IN CONNECTION WITH ANY WORK OTHER THAN FOR THE SPECIFIC PROJECT FOR WHICH THEY HAVE BEEN PREPARED, WITHOUT WRITTEN CONSENT OF THE DESIGN PROFESSIONAL.

SHEET TITLE

ELECTRICAL FLOOR PLAN

SHEET No.

E200

Miami Dade County Department of Regulatory and Economic Resources - Job Copy
2025008506 - 5/19/2025 11:05:46 AM
E200.pdf

PHASE: 1ø
VOLTAGE: 120/240V
PANEL AMPS: 200 Amps

EXISTING PANEL "A"

(BRANCH BREAKERS TYPE QP, 10KAIC)

MAKE: EXISTING
TYPE: EXISTING
MAIN BREAKER: 150A

Ckt No.	USE	SPEC	VOLT	BKR AMP	WIRE AWG	COND SIZE	VA	PH A	PH B	VA	COND SIZE	WIRE AWG	BKR AMP	VOLT	SPEC	USE	Ckt No.
1	**EXISTING BEDROOM LIGHT & RECEPT.**		**120**	**15**	**14**	**1/2**	*			*	EXIST	EXIST	15	120		EXISTING BEDROOM LIGHT & RECEPT.	2
3	EXISTING BEDROOM LIGHT & RECEPT.		120	15	EXIST	EXIST	*			*	EXIST	EXIST	15	120		EXISTING BEDROOM LIGHT & RECEPT.	4
5	**EXISTING BEDROOM LIGHT & RECEPT.**		**120**	**15**	**14**	**1/2**	*			*	EXIST	EXIST	15	120		EXISTING BEDROOM LIGHT & RECEPT.	6
7	EXISTING LIGHT		120	20	EXIST	EXIST	*			*	EXIST	EXIST	20	120		EXISTING BATHROOM RECEPTACLES	8
9	EXISTING BATHROOM RECEPTACLES		120	20	EXIST	EXIST	*			*	EXIST	EXIST	20	120		EXISTING LIGHT	10
11	EXISTING LIGHT		120	20	EXIST	EXIST	*			11,500	EXIST	EXIST	60	240		EXISTING A.H.U. #1	12
13	EXISTING TANKLESS W/H #1		240	40	EXIST	EXIST	9,000			↓	↓	↓	↓	↓		↓	14
15	↓		↓	↓	↓	↓	↓			*	EXIST	EXIST	20	120		EXISTING LIGHT	16
17	EXISTING TANKLESS W/H #1		240	40	EXIST	EXIST	9,000			1,500	EXIST	EXIST	20	120		EXISTING LAUNDRY CIRCUIT	18
19	↓		↓	↓	↓	↓	↓			1,500	EXIST	EXIST	20	120		EXISTING CLOTHES WASHER	20
21	EXISTING C.U. #1	NCL	240	40	EXIST	EXIST	5,400										22
23	↓		↓	↓	↓	↓	↓										24
25	EXISTING DRYER		240	30	EXIST	EXIST	5,000										26
27	↓		↓	↓	↓	↓	↓										28
29																	30

* SEE Load CALCULATION
** VERIFY NAME PLATE
GFI = GROUND FAULT INTERRUPTER.
AFCII = ARC FAULT CIRCUIT INTERRUPTER.
[HANDLE TIES

Load Calculation:
Lighting 2,410 sqf x 3 va/sqf = 7,230 va
Small Applicances = 0 va
Laundry = 1,500 va
First 3000 va @ 100% and Rest @ 35% = 5,006 va
Appliances = 24,500 va, (over 4 Appliances) @75% Demand load = 18,375 va
Outdoor Lights/receptacles = 600 va
Range = 0 va,
A/C Load = 11,500 va
Total VA = 35,481 va
Panel Load = 35,481/240 = 148 Amps

PHASE: 1ø
VOLTAGE: 120/240V
PANEL AMPS: 200 Amps

EXISTING PANEL "B"

(BRANCH BREAKERS TYPE QP, 10KAIC)

MAKE: EXISTING
TYPE: EXISTING
MAIN BREAKER: NONE

Ckt No.	USE	SPEC	VOLT	BKR AMP	WIRE AWG	COND SIZE	VA	PH A	PH B	VA	COND SIZE	WIRE AWG	BKR AMP	VOLT	SPEC	USE	Ckt No.
1	**RELOCATED A.H.U#2**		**240**	**60**	**6**	**1**	**7,280**			**8,000**	**1**	**6**	**50**	**240**		**RELOCATED COOK TOP**	2
3	↓		↓	↓	↓	↓	↓			↓	↓	↓	↓	↓		↓	4
5	EXISTING C.U. #2	NCL	240	40	EXIST	EXIST	5,400			16,000	EXIST	EXIST	70	240		EXISTING TANKLESS W/H#2	6
7	↓		↓	↓	↓	↓	↓			↓	↓	↓	↓	↓		↓	8
9	**NEW TANKLESS W/H #3**		**240**	**60**	**6**	**1**	**11,000**										10
11	↓		↓	↓	↓	↓	↓										12
13	EXISTING OVEN		240	40	EXIST	EXIST	5,000										14
15	↓		↓	↓	↓	↓	↓										16
17	EXISTING OVEN		240	40	EXIST	EXIST	5,000										18
19	↓		↓	↓	↓	↓	↓										20
21	**EXISTING KITCHEN SMALL APPLIANCES**	**GFI**	**120**	**20**	**12**	**1/2**	**1,500**										22
23	**EXISTING KITCHEN SMALL APPLIANCES**	**GFI**	**120**	**20**	**12**	**1/2**	**1,500**										24
25	EXISTING RECEPTACLES		120	20	EXIST	EXIST	*										26
27	EXISTING RECEPTACLES		120	20	EXIST	EXIST	*										28
29	EXISTING RECEPTACLES		120	20	EXIST	EXIST	*										30
31	**MASTER BEDROOM RECEPTACLES**	**AFCI**	**120**	**20**	**12**	**1/2**	*			*	**1/2**	**12**	**20**	**120**	**GFI**	**MASTER BATHROOM RECEPTACLES**	32
33	**MASTER BEDROOM LIGHTS**	**AFCI**	**120**	**20**	**12**	**1/2**	*			**4,800**	**3/4**	**8**	**40**	**240**		**A.H.U. #3**	34
35	EXISTING LIGHTS		120	20	EXIST	EXIST	*			↓	↓	↓	↓	↓		↓	36
37	EXISTING LIGHTS		120	20	EXIST	EXIST	*			**2,400**	**3/4**	**12**	**20**	**240**	**NCL**	**C.U. #3**	38
39										↓	↓	↓	↓	↓		↓	40

* SEE Load CALCULATION
** VERIFY NAME PLATE
GFI = GROUND FAULT INTERRUPTER.
AFCII = ARC FAULT CIRCUIT INTERRUPTER.
[HANDLE TIES

Load Calculation:
Lighting 1,528 sqf x 3 va/sqf = 4,584 va
Small Applicances = 3,000 va
Laundry = 1,500 va
First 3000 va @ 100% and Rest @ 35% = 5,130 va
Appliances = 28,190 va, (over 4 Appliances) @75% Demand load = 21,143 va
Outdoor Lights/receptacles = 600 va
Range = 8,600 va,
A/C Load = 9,680 va
Total VA = 45,153 va
Panel Load = 45,153/240 = 188 Amps

Service Load Calculation
As per N.E.C Art. 220.30 Section B.
2,924 sqf x 3 va/sqf = 8,772 va
Other Loads = 68,400 va
Subtotal = 77,172 va
First 10,000 va @ 100% = 10,000 va
Rest 67,172 va @ 40% = 26,869 va
Subtotal = 36,869 va
A/C Load = 22,460 va
Total VA = 59,329 va
Panel Load = 59,329/240V = 248 Amps

ELECTRICAL RISER DIAGRAM LEGEND

A	EXISTING 3 #350 MCM THWN (CU) IN 2-1/2" CONDUIT.
B	EXISTING 3 #3/0 MCM THWN (CU) & (1) #6 THWN GROUND IN 2" CONDUIT.
C	EXISTING 3 #1/0 MCM THWN (CU) & (1) #6 THWN GROUND IN 2" CONDUIT.
D	EXISTING 3 #3 MCM THWN (CU) & (1) #8 THWN GROUND IN 1-1/4" CONDUIT.

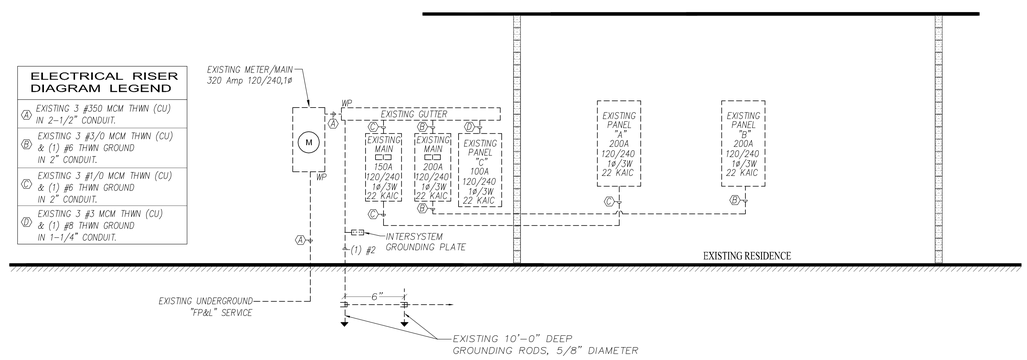

ELECTRICAL RISER DIAGRAM N.T.S.

NOVUS Archetype
architecture / interior / planning
NOVUS Archetype, LLC
12721 SW 30th ST, MIAMI, FL 33175
PH: (305) 505-6910
email: julio@novusarchetype.com
AA26001460
Qualifier: Julio Pulido, AIA
License #: AR93904
Qualifier : Salvador Ben Mitrani, NCARB
License # : AR99606

ACO DESIGN LLC.
MECHANICAL, ELECTRICAL & PLUMBING ENGINEERING DESIGN
PH: (786) 234-7046
E-mail: gorgoy127@hotmail.com.com
Address: 106 Florida Blvd, Miami FL 33144
Qualifier: Ernesto Rodriguez P.E. # 58155

Dylan & Jamie Roy

Interior Remodeling & Addition

6783 SW 104th St Pinecrest, Fl 33156

No.	Description	Date

Project number	24-011
Date	10-24-2024
Drawn by	O.G.
Checked by	E.R.

ERNESTO RODRIGUEZ LICENSE No. 58155 STATE OF FLORIDA PROFESSIONAL ENGINEER

NOT VALID FOR CONSTRUCTION OR BIDDING WITHOUT SIGNATURE & CITY APPROVAL STAMPS

Digitally signed by Ernesto Rodriguez
Date: 2024.12.20 10:06:45 -05'00'

This item has been digitally signed and sealed by Ernesto Rodriguez P.E. on the date adjacent to the seal. Printed Copies of this document are not considered signed and sealed and the signature must be be verified on any electronic copies

PLANS ARE PROTECTED UNDER THE COPYRIGHT LAWS OF FLORIDA: ALL RIGHTS RESERVED.

CONTRACTOR SHALL VERIFY AND BE RESPONSIBLE FOR ALL DIMENSIONS AND CONDITIONS ON THE JOB. THE DESIGN PROFESSIONAL SHALL BE NOTIFIED IMMEDIATELY REGARDING ANY VARIATION FROM THE PLANS. ALL IDEAS DESIGN IMPROVEMENTS AND PLANS INDICATED OR REPRESENTED BY THESE PLANS AND SPECIFICATIONS ARE THE PROPERTY OF THE DESIGN PROFESSIONAL AND THESE PLANS ARE NOT TO BE USED OR DISTRIBUTED FOR USE ON ANY WORK CONNECTION WITH THE SPECIFIED PROJECT, ANY CHANGES TO THESE PLANS WITHOUT THE WRITTEN CONSENT OF THE DESIGN PROFESSIONAL, ANY REPRODUCTION OF THESE PLANS OR ANY PART THEREOF PLANS WITHOUT EXPRESSED APPROVAL OF ACO DESIGN SHALL AUTOMATICALLY RENDER THE DESIGN PROFESSIONAL AND ACO DESIGN HARMLESS TO ANY LIABILITY CLAIMS, DAMAGES, LOSSES AND EXPENSES ARISING OUT OF OR RESULTING THEREFROM. ALL COPIES OF THESE PLANS SHALL BE COPIES OR REPRODUCED BY ANY MEANS, OR USED IN CONNECTION WITH ANY WORK OTHER THAN FOR THE SPECIFIC PROJECT FOR WHICH THEY WERE BEEN DRAWN(NO, WITHOUT WRITTEN CONSENT OF THE DESIGN PROFESSIONAL.

SHEET TITLE

ELECTRICAL RISER & SCHEDULES

SHEET No.

E300

Miami Dade County Department of Regulatory and Economic Resources - Job Copy
2025008506 - 5/19/2025 11:05:46 AM
E300.pdf

ePayment

Thank You For Your Payment!

Nothing to show.

Order Date	4/14/2025
Order Time	2:58:24 PM
Transaction Number	140425C18-D86FF483-9A57-4D9B-AA33-81117755D423
Authorization Number	04727D
Payment Option	Credit Card
Name	May D Ganni
***Payment Item(s)*(1)**	$100.00
X2025090499	$100.00
Job Address	6783 SW 104 ST
TOTAL	$100.00

Monday, April 14, 2025 at 2:58:40 PM

©2025 - Miami-Dade County. All rights reserved.

STATE OF FLORIDA
DEPARTMENT OF ENVIRONMENTAL PROTECTION
ONSITE SEWAGE TREATMENT AND DISPOSAL SYSTEM (OSTDS)

PERMIT NO. _____
DATE PAID: _____
FEE PAID: _____
RECEIPT #: _____

APPLICATION FOR CONSTRUCTION PERMIT

APPLICATION FOR:
[ ] New System [✓] Existing System [ ] Holding Tank [ ] Innovative
[ ] Repair [ ] Abandonment [ ] Temporary [ ] _____

APPLICANT: ROY RESIDENCE EMAIL: yerobis@live.com

AGENT: Caraballo express SR0181820 TELEPHONE: 7868531840

MAILING ADDRESS: 240 W 28ST HIALEAH FL 33010

==========

TO BE COMPLETED BY APPLICANT OR APPLICANT'S AUTHORIZED AGENT. SYSTEMS MUST BE CONSTRUCTED BY A PERSON LICENSED PURSUANT TO 489.105(3)(m) OR 489.552, FLORIDA STATUTES. IT IS THE APPLICANT'S RESPONSIBILITY TO PROVIDE DOCUMENTATION OF THE DATE THE LOT WAS CREATED OR PLATTED (MM/DD/YY) IF REQUESTING CONSIDERATION OF STATUTORY GRANDFATHER PROVISIONS.

==========

PROPERTY INFORMATION OSTDS REMEDIATION PLAN? [Y / N]

LOT: N/A BLOCK: N/A SUBDIVISION: UNPLATTED PLATTED: UNPLATTED

PROPERTY ID #: 20-5002-000-1100 ZONING: 0101 I/M OR EQUIVALENT: [Y / N]

PROPERTY SIZE: 1.3 ACRES WATER SUPPLY: [ ] PRIVATE PUBLIC [✓]<=2000GPD [ ]>2000GPD

IS SEWER AVAILABLE AS PER 381.0065, FS? [Y / N] DISTANCE TO SEWER: N/A FT

PROPERTY ADDRESS: 6783 SW 104 ST PINECREST, FL 33156

DIRECTIONS TO PROPERTY: 6783 SW 104 ST PINECREST, FL 33156

BUILDING INFORMATION [✓] RESIDENTIAL [ ] COMMERCIAL

Unit No.	Type of Establishment	No. of Bedrooms	Building Area Sqft	Commercial/Institutional System Design Table I, Chapter 62-6, FAC
1	SINGLE FAMILY	7	5160	7 BEDROOM 5 BATH
2				
3				
4				

[ ] Floor/Equipment Drains [ ] Other (Specify) _____

SIGNATURE: DATE: 03/01/25

Miami-Dade County Department of Regulatory and Economic Resources - Job Copy
2025008506 - 5/19/2025 11:05:46 AM
Existing System Evaluation Form FDEP.pdf
Examiner Date Time Stamp Trade Stamp Name
TOLEDO, GABRIEL 4/14/2025 9:38:37 AM HRS Approved

STATE OF FLORIDA
DEPARTMENT OF ENVIRONMENTAL PROTECTION
APPLICATION FOR CONSTRUCTION PERMIT

Permit Application Number_____

- PART II - SITEPLAN -

Scale: Each block represents 10 feet and 1 inch = 40 feet.

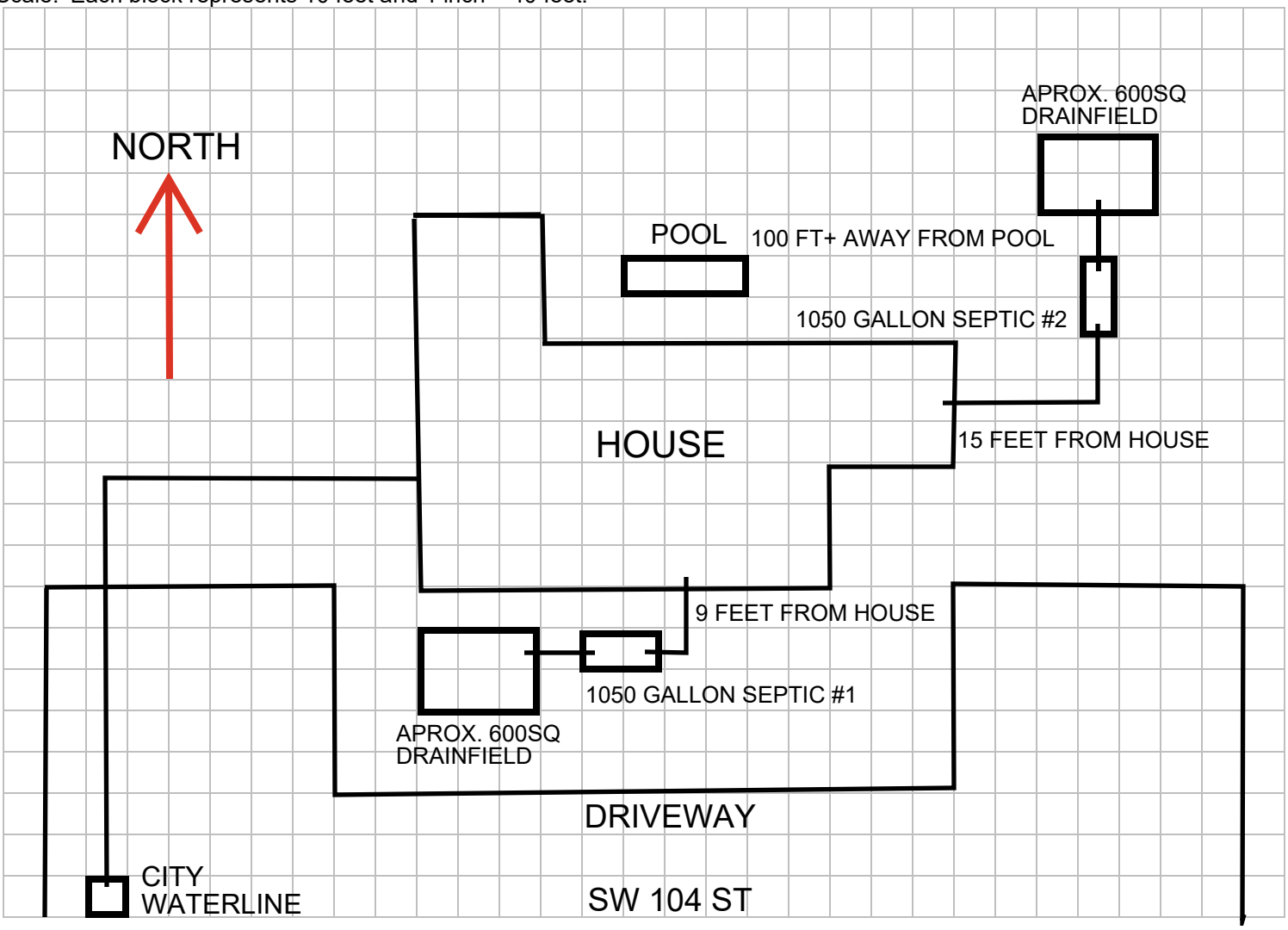

Notes: THERE IS 2 SEPTIC SYSTEMS ON THIS PROPERTY ONE IS IN FRONT (SOUTH WEST) 9 FEET FROM THE HOUSE. THE SECOND ONE IS (NORTH WEST) 15 FEET FROM THE HOUSE.

Site Plan submitted by: Caraballo express SR0181820

Plan Approved_____ Not Approved_____ Date 3/1/25

By_____ County Health Department

ALL CHANGES MUST BE APPROVED BY THE COUNTY HEALTH DEPARTMENT

DEP 4015, 06-21-2022 (Obsoletes previous editions which may not be used)

Miami Dade County Department of Regulatory and Economic Resources - Job Copy
Incorporated: 62-0904F1A.0
20250[illegible] - 3/19/2025 11:05:46 AM
Existing System Evaluation Form FDEP.pdf
Examiner Date Time Stamp Trade Stamp Name
TOLEDO, GABRIEL 4/14/2025 9:38:37 AM HRS Approved

STATE OF FLORIDA
DEPARTMENT OF ENVIRONMENTAL PROTECTION
ONSITE SEWAGE TREATMENT AND DISPOSAL SYSTEM

PERMIT NO. _____

EXISTING SYSTEM AND SYSTEM REPAIR EVALUATION

APPLICANT: ROY RESIDENCE

CONTRACTOR / AGENT: Caraballo express SR0181820

LOT: N/A BLOCK: N/A SUBDIV: UNPLATTED SINGLE FAMILY ID#: 20-5002-000-1100

==========

TO BE COMPLETED BY FLORIDA REGISTERED ENGINEER, DEPARTMENT EMPLOYEE, SEPTIC TANK CONTRACTOR OR OTHER CERTIFIED PERSON. SIGN AND SEAL ALL SUBMITTED DOCUMENTS. COMPLETE ALL APPLICABLE ITEMS. COMPLETE TANK CERTIFICATION BELOW OR NOTE IN REMARKS WHY THE TANKS CANNOT BE CERTIFIED.

==========

EXISTING TANK INFORMATION

[1050] GALLONS SEPTIC TANK/GPD ATU LEGEND: 7'X5'X4' MATERIAL: CONCRETE BAFFLED: [Y / N]
[1050] GALLONS SEPTIC TANK/GPD ATU LEGEND: 7'X5'X4' MATERIAL: CONCRETE BAFFLED: [Y / N]
[ ] GALLONS GREASE INTERCEPTOR LEGEND: _____ MATERIAL: _____
[ ] GALLONS DOSING TANK LEGEND: _____ MATERIAL: _____ # PUMPS: [0]

==========

I CERTIFY THAT THE LISTED TANKS WERE PUMPED ON 02 / 24 / 25 BY Caraballo express SR0181820, HAVE THE VOLUMES SPECIFIED AS DETERMINED BY [DIMENSIONS / FILLING / LEGEND], ARE FREE OF OBSERVABLE DEFECTS OR LEAKS, AND HAVE A [SOLIDS DEFLECTION DEVICE / OUTLET FILTER DEVICE] INSTALLED.

SIGNATURE OF LICENSED CONTRACTOR	BUSINESS NAME	DATE
	Caraballo express	03/01/25

==========

EXISTING DRAINFIELD INFORMATION

[600] SQUARE FEET PRIMARY DRAINFIELD SYSTEM NO. OF TRENCHES [6] DIMENSIONS: 25' X 24'
[600] SQUARE FEET SECONDARY SYSTEM NO. OF TRENCHES [6] DIMENSIONS: 25' X 24

TYPE OF SYSTEM: [ ] STANDARD [ ] FILLED [ ] MOUND [ ] _____
CONFIGURATION: [✓] TRENCH [ ] BED [ ] _____
DESIGN: [ ] HEADER [ ] D-BOX [✓] GRAVITY SYSTEM [ ] DOSED SYSTEM
ELEVATION OF BOTTOM OF DRAINFIELD IN RELATION TO NATURAL GRADE 29 INCHES [ABOVE / BELOW]

SYSTEM FAILURE AND REPAIR INFORMATION

[UNKNOWN] SYSTEM INSTALLATION DATE TYPE OF WASTE [✓] DOMESTIC [ ] COMMERCIAL
[700] GPD ESTIMATED SEWAGE FLOW BASED ON [ ] METERED WATER [✓] TABLE I, 62-6, FAC

SITE CONDITIONS: [ ] DRAINAGE STRUCTURES [ ] POOL [ ] PATIO / DECK [ ] PARKING
[ ] SLOPING PROPERTY [ ] _____

NATURE OF FAILURE: [ ] HYDRAULIC OVERLOAD [ ] SOILS [ ] MAINTENANCE [ ] SYSTEM DAMAGE
[ ] DRAINAGE / RUN OFF [ ] ROOTS [ ] WATER TABLE [ ] _____

FAILURE SYMPTOM: [ ] SEWAGE ON GROUND [ ] TANK [ ] D BOX/HEADER [ ] DRAINFIELD
[ ] PLUMBING BACKUP [ ] _____

REMARKS/ADDITIONAL CRITERIA BOTH SEPTIC SYSTEMS ARE IN GOOD WORKING CONDITIONS.

SUBMITTED BY: Caraballo express TITLE/LICENSE SR0181820 DATE: 03/01/25

Miami Dade County Department of Regulatory and Economic Resources - Job Copy
20250485556, 05/19/2025 11:05:46 AM
Existing System Evaluation Form FDEP.pdf
Incorporated 62-6.004, FAC
Examiner Date Time Stamp Trade Stamp Name
TOLEDO, GABRIEL 4/14/2025 9:38:37 AM HRS Approved

MIAMI-DADE COUNTY

DEPARTMENT OF REGULATORY AND ECONOMIC RESOURCES

http://www.miamidade.gov/building/home.asp

5/19/2025 11:05:46 AM

Tracking #	Process #	Permit #
2025008506	M2025008506	2025045593

THIS COPY OF PLANS MUST BE AVAILABLE ON BUILDING SITE OR AN INSPECTION WILL NOT BE MADE.

Process #	Review	Disposition	Reviewer	Date
M2025008506	DEPT OF HEALTH	A	TALAB, VIDA	5/19/2025
M2025008506	DERM CORE	A	SARDINA, YALENYS	2/4/2025
M2025008506	DERM ONSITE SEWAGE TREATMENT & DISPOSAL SYSTEMS	N	VALDIVIESO MERA, JOSE	3/6/2025
M2025008506	IMPACT FEES	N	IDARRAGA, MELINA	2/3/2025
M2025008506	UPFRONT FEES	A	WEB APPLICATION ID	2/3/2025
M2025008506	WASA	A	CHICA, HAROLD	2/28/2025

Disclaimer.

Subject to compliance with all Federal, State, and County Laws, rules and regulations. Miami-Dade County assumes no responsibility for accuracy of or results of these plans.

NOTICE: In addition to the requirements of this permit, there may be additional restrictions applicable to the property that may be found in the public records of this county, and there may be additional permits required from other governmental entities such as water management districts, state agencies or federal agencies.

Stamp Name	Trade	Disposition	Stamp Description
Approved	DERM	A	Approved
Approved	HRS	A	Approved

HVAC GENERAL NOTES

1. ALL WORK SHALL CONFORM WITH ALL LOCAL, STATE, FEDERAL ORDINANCES AND BUILDING CODES GOVERNING THE INSTALLATION OF THE MECHANICAL SYSTEM. IF WORK AS LAID OUT, INDICATED OR SPECIFIED IS CONTRARY TO OR CONFLICTS WITH FIELD CONDITIONS, LOCAL ORDINANCES, BUILDING CODES AND REGULATIONS, THE CONTRACTOR SHALL REPORT IN WRITING TO THE ARCHITECT/ENGINEER BEFORE SUBMITTING A BID OR PROCEEDING WITH WORK. THE ARCHITECT/ENGINEER WILL THEN ISSUE INSTRUCTIONS AS HOW TO PROCEED.

2. THE DRAWINGS ARE TO BE CONSIDERED DIAGRAMMATIC, NOT NECESSARILY SHOWING IN DETAIL OR TO SCALE ALL OF THE MINOR ITEMS. UNLESS SPECIFIC DIMENSIONS ARE SHOWN, THE STRUCTURAL, ARCHITECTURAL AND SITE CONDITIONS SHALL GOVERN THE EXACT LOCATIONS. CONTRACTOR SHALL FOLLOW DRAWINGS IN LAYING OUT WORK, CHECK DRAWINGS OF ALL TRADES TO VERIFY SPACES IN WHICH WORK WILL BE INSTALLED AND MAINTAIN MAXIMUM HEAD ROOM, AND SPACE CONDITIONS AT ALL POINTS. COORDINATE LOCATION OF DUCTWORK WITH OTHER TRADES, PARTICULARLY WHERE DUCTS RUN THROUGH STRUCTURAL ELEMENTS. PROVIDE ALL NECESSARY SLEEVES BEFORE CONCRETE IS POURED. WHERE HEAD ROOM, OR SPACE CONDITIONS APPEAR INADEQUATE, ARCHITECT/ ENGINEER SHALL BE NOTIFIED BEFORE PROCEEDING WITH INSTALLATION. THIS CONTRACTOR SHALL, WITHOUT EXTRA CHARGE, MAKE FIELD MODIFICATION IN LAYOUT AS NEEDED TO PREVENT CONFLICT WITH WORK OF VARIOUS TRADES OR FOR PROPER EXECUTION OF THE WORK.

3. EXAMINE ALL DRAWINGS CAREFULLY PRIOR TO SUBMITTING A BID. CONTRACTOR WILL BE REQUIRED TO FURNISH, INSTALL AND/OR CONNECT WITH APPROPRIATE SERVICES ALL PLUMBING ITEMS SHOWN ON ANY OF THE ARCHITECTURAL, AIR CONDITIONING, ELECTRICAL AND SPRINKLER DRAWINGS WITHOUT ADDITIONAL EXPENSE TO THE OWNER. IF DISCREPANCIES, CONFLICTS, INTERFERENCE OR OMISSIONS OCCUR BETWEEN DRAWINGS, NOTIFY IN WRITING THE ARCHITECT/ENGINEER IN AMPLE TIME TO PERMIT REVISIONS BEFORE THE BIDS ARE SUBMITTED.

4. INSTALL MATERIALS AND EQUIPMENT IN A NEAT AND FIRST CLASS WORKMANLIKE MANNER. THE OWNER RESERVES THE RIGHT TO DIRECT REMOVAL AND REPLACEMENT OF ITEMS WHICH, IN HIS OPINION, DO NOT PRESENT A NEAT AND WORKMANLIKE APPEARANCE. REMOVAL AND REPLACEMENT IS TO BE DONE IMMEDIATELY WHEN DIRECTED BY THE OWNER IN WRITING, AT THE SOLE EXPENSE OF CONTRACTOR.

5. START OF WORK BY CONTRACTOR SHALL BE CONSIDERED AS ACCEPTANCE BY HIM OF ALL CLAIMS OR QUESTIONS AS TO SUITABILITY OF THE WORK OF OTHER. TRADES OR OTHER CONTRACTORS TO RECEIVE HIS WORK. THIS CONTRACTOR SHALL REMOVE AND REPLACE, AT HIS EXPENSE, ALL MECHANICAL WORK WHICH MAY HAVE TO BE REMOVED BECAUSE OF INTERFERENCE WITH OTHER TRADES.

6. THIS CONTRACTOR SHALL OBTAIN AND PAY ALL INSURANCE, FEES, PERMITS, ASSOCIATION DUES, ROYALTIES AND TAXES OF WHATEVER NATURE SHALL APPLY TO THIS WORK. HE SHALL ALSO PAID ALL THE INSPECTION FEES AS MAY BE REQUIRED BY LAW OR ORDINANCE AND SHALL KEEP THE OWNER HARMLESS FROM ANY DAMAGE AND EXPENSE ARISING FROM ANY VIOLATION OF LAWS, RULES OR ORDINANCES.

7. PROVIDE MEANS "FURNISH AND INSTALL".

8. DO A COMPLETE JOB, EVERYTHING CONNECTED, READY FOR USE.

9. SHOP DRAWINGS: CONTRACTOR SHALL FURNISH THE ENGINEER WITH SHOP DRAWINGS OF EQUIPMENT PRIOR TO PURCHASE FOR APPROVAL.

10. AT COMPLETION OF JOB THE MECHANICAL CONTRACTOR SHALL GIVE THE OWNER AN AS-BUILT SET OF REPRODUCIBLE DRAWINGS SHOWING THE EXACT LOCATION OF ALL INSTALLATIONS.

11. THE CONTRACTOR SHALL FURNISH ALL LABOR, MATERIAL AND EQUIPMENT
FOR A COMPLETE H.V.A.C. SYSTEM IN ACCORDANCE WITH THESE DRAWINGS. THE FLORIDA BUILDING CODE AND THE LATEST EDITION OF THE FOLLOWING
PUBLICATIONS:
a) ANS B91. MECHANICAL REFRIGERATION
b) NFPA PAMPHLETS 90A & 91
c) SMACNA
d) ASHRAE

12. ALL SUPPLY AIR CONDITIONING DUCTWORK SHALL BE 1.5" STANDARD DUTY (R-6) FULL REINFORCED FIBERGLASS WITH MANUFACTURE LOGO PRINTED ON THE VAPOR BARRIER WHEN IN UNCONDITIONED SPACE, AND 3/4" STANDARD DUTY FOIL REINFORCED FIBERGLASS (R-4) WITH MANUFACTURE LOGO PRINTED ON THE VAPOR BARRIER IN CONDITIONED SPACE OR RETURN PLENUM SPACE. R-8 FLEXIBLE DUCTS ARE ACCEPTABLE AS SHOWN ON DRAWINGS.

13. ALL EXHAUST AIR DUCTWORK SHALL BE CODE GAGE GALVANIZED SHEET METAL.

14. DUCT SIZES SHOWN ARE NET FREE AREA.

15. ALL AIR DEVICES (DIFFUSERS, REGISTERS, AND GRILLES) SHALL BE ALL
ALUMINUM CONSTRUCTION, WITH EXPOSED SURFACE CHEMICALLY TREATED TO
RECEIVE PAINT TO MATCH COLOR OF AIRGUIDE OR APPROVED EQUAL.

16. PROVIDE TURNING VANES AT ALL ELBOWS. PROVIDE MULTIPLE VANE EXTRACTORS OR SPLITTERS WITH CONTROL RODS AT ALL OUTLETS CONNECTED CLOSER THAN TWO DUCT DIAMETERS TO MAIN SUPPLY DUCT AND WHERE SHOWN ON DRAWINGS. PROVIDE ALL NECESSARY ACCESS PANELS TO CONTROL VALVES, DAMPERS, ETC.

17. REFRIGERANT PIPING SHALL BE SEAMLESS COPPER TYPE "L" HARD OR SOFT DRAWN OR ACR COPPER TUBING WITH WROUGHT COPPER SOLDER JOINT FITTINGS. SOLDER SHALL BE 95/5, APPLIED WITH SUITABLE FLUX. INSULATE REFRIGERANT SUCTION PIPING WITH 3/4" FIRE RESISTANT FOAM PLASTIC OR CLOSED CELL POLYETHYLENE PRE-MOLDED PIPE INSULATION.

18. ALL CONTROL WIRING SHALL BE THE RESPONSIBILITY OF THE MECHANICAL SUB-CONTRACTOR. MECHANICAL SUB CONTRACTOR TO FURNISH ALL MOTORS, STARTERS, AND RELAYS, ETC.

19. FOR INSTALLATION OF ANY ROOF OR WALL MOUNTED EQUIPMENT REFER TO ARCHITECTURAL STRUCTURAL ENGINEERING DRAWINGS.

DESIGN REQUIREMENTS

HVAC DESIGN REQUIRES:	YES	NO
DUCT SMOKE DETECTOR		X
FIRE DAMPER(S)		X
SMOKE DAMPER(S)		X
FIRE RATED ENCLOSURE		X
FIRE RATED ROOF/FLOOR CEILING ASSEMBLY		X
FIRE STOPPING		X
SMOKE CONTROL		X

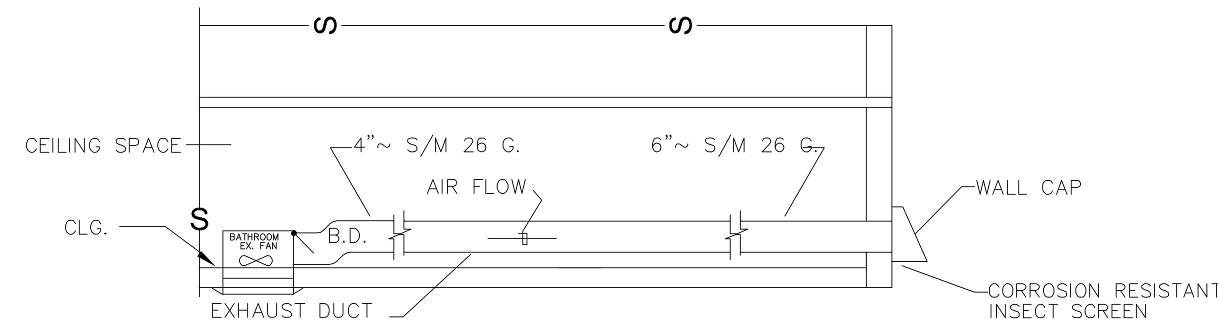

BATHROOM EXHAUST FAN & DUCT-DETAIL
N.T.S.

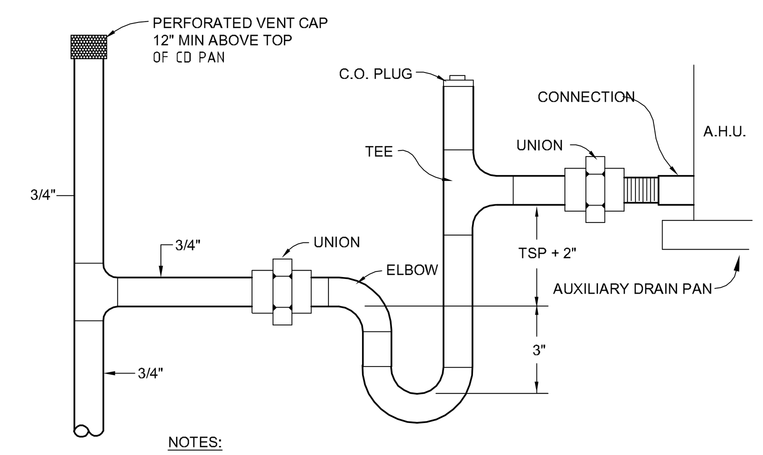

NOTES:
A. SLOPE DRAIN LINE TO CONDENSATE RECEPTOR (MIN. 1/8" PER FOOT)
B. DRAIN LINE SHALL BE COPPER TYPE "L" AND INSULATED
C. TSP = FAN TOTAL STATIC PRESSURE

A/C CONDENSATE P-TRAP DETAIL
N.T.S.

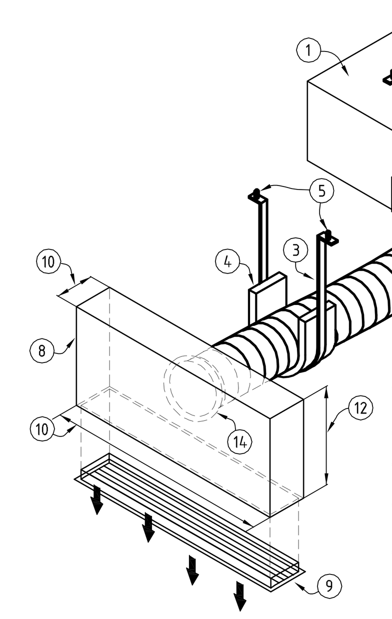

NOTES
1 - SUPPY RIGID DUCT UP TO 29" WIDTH OR 16" DEEP.
2 - FLEX DUCT UP TO 29"
3 - 1 1½" WIDE X 22 GA (min) STRAP @ 8"-0 O/C PINS.
4 - 3" WIDE X 22 GA (min) G.M. STRIP AT SUPPORT.
5 - ¾" DEEP X ⅛" POWERED ACTUATED PINS.
6 - 5' MAX SPACING ON FLEX DUCT HANGER PER SMACNA
7 - OPPOSED BLADE DAMPER
8 - DISCHARGE BOX
9 - GRILLE (SEE PLANS)
10 - LENGTH IS REQ. BY GRILLE SIZE
11 - 1" MINIMUM LENGTH
12 - DUCT HEIGHT + 4"
13 - 6" MINIMUM LENGTH
14 - STRAP AS PER SMACNA 2.12 PROVIDE ALUMINUM TAPE COVERING STRAP & JOINT (NOT SHOW FOR CLARITY)

DUCT HANGER & DISCHARGE BOX DETAIL
N.T.S.
(TYPICAL) (DISCHARGE BOX DETAIL PER SMACNA 2.16)

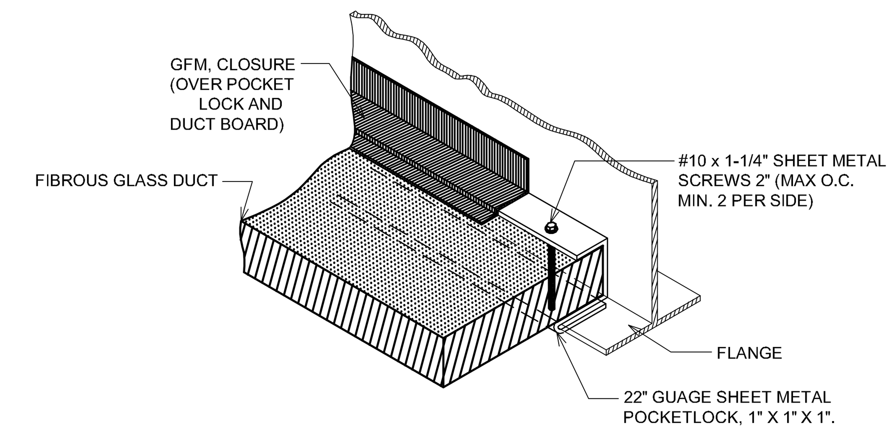

SHEET METAL AND EQUIPMENT CONNECTION DETAIL
N.T.S.

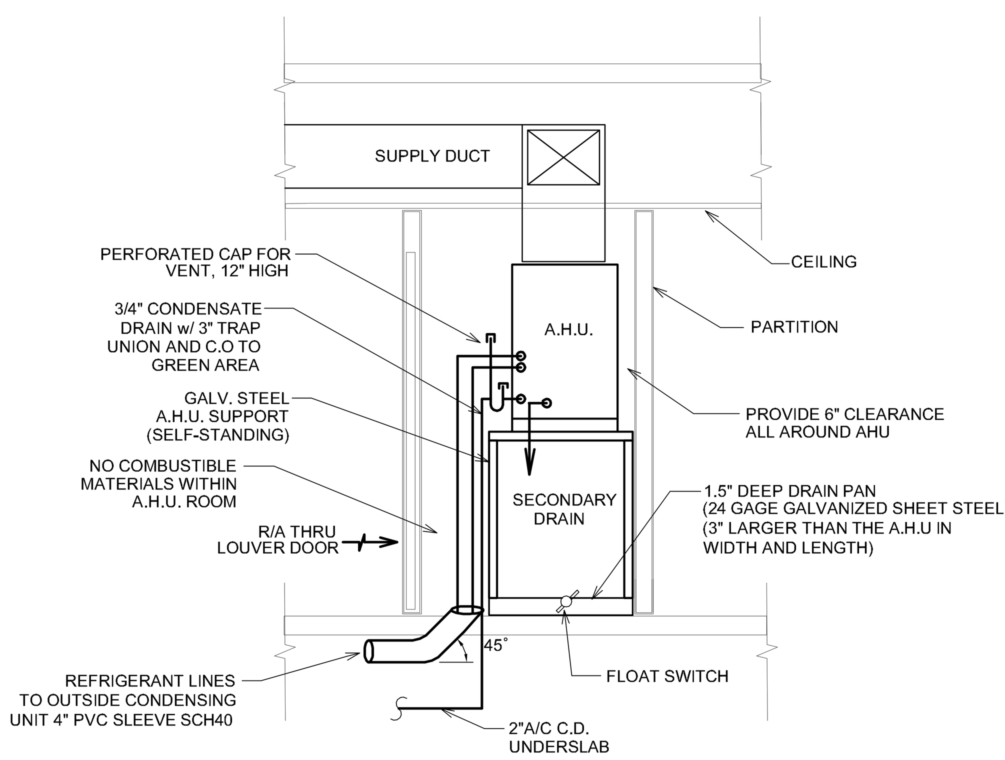

AIR HANDLER UNIT #3 INSTALLATION DETAIL
N.T.S

PIPING AND FITTINGS FOR REFRIGERANT VAPOR (SUCTION) LINES SHALL BE INSULATED WITH INSULATION HAVING A THERMAL RESISTIVITY OF AT LEAST R-4 AND HAVING EXTERNAL SURFACE PERMEANCE NOT EXCEEDING 0.05 PERM [2.87 NG/(S • M2 • PA)] WHEN TESTED IN ACCORDANCE WITH ASTM E 96.

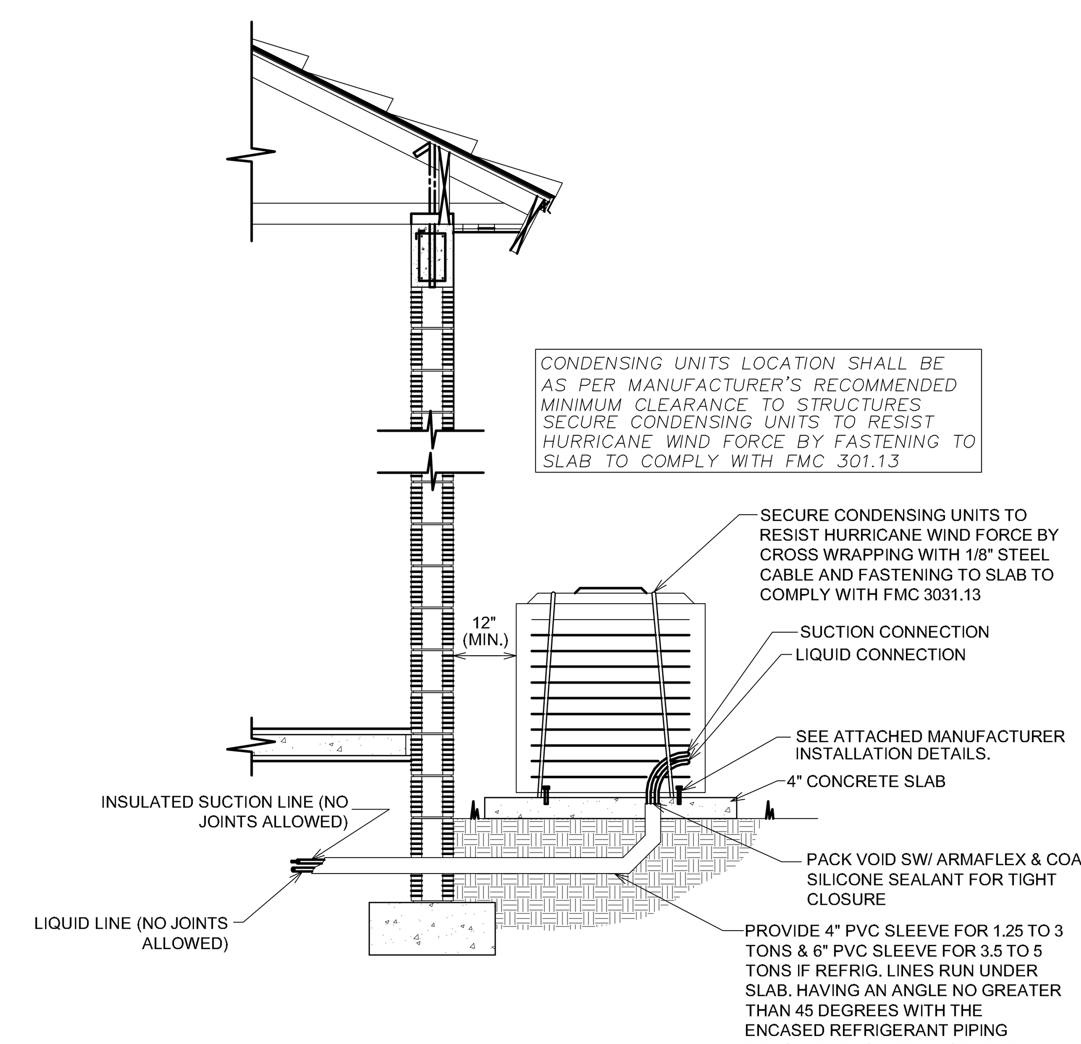

CONDENSING UNIT INSTALLATION DETAIL
N.T.S

NOTES:
1. INSTALL CONDENSING UNIT EITHER ABOVE THE BASE FLOOD ELEVATION LEVEL OR PROTECTED SO AS TO PREVENT WATER FROM ENTERING OR ACCUMULATING WITHIN THE CONDENSING UNIT DURING FLOODS UP TO THE BASE FLOOD ELEVATION.
2. INSTALLATION MUST MEET MINIMUM OF 175 MPH WIND LOADING. MIN. REQUIREMENTS ARE HERBY INDICATED HOWEVER BASED ON ACTUAL EQUIPMENT INSTALLED EPA (EFFECTIVE PROJECTED AREA) ADDITIONAL SECURING SHALL BE PROVIDED PER FLORIDA BUILDING CODE (2017).
3. REFRIGERANT CIRCUIT ACCESS PORTS LOCATED OUTDOORS SHALL BE FITTED WITH LOCKING-TYPE TAMPER-RESISTANT CAPS OR SHALL BE OTHERWISE SECURED TO PREVENT UNAUTHORIZED ACCESS.
4. ALL EXPOSED ELASTOMERIC INSULATION TO BE JACKETED OR PAINTED WITH AV PROTECTIVE PAINT.

NOVUS Archetype
architecture / interior / planning
NOVUS Archetype, LLC
12721 SW 30th ST. MIAMI, FL 33175
PH: (305) 505-6910
email: julio@novusarchetype.com
AA26001460
Qualifier: Julio Pulido, AIA
License #: AR93904
Qualifier : Salvador Ben Mitrani, NCARB
License # : AR99606

ACO DESIGN LLC.
MECHANICAL, ELECTRICAL & PLUMBING ENGINEERING DESIGN
PH: (786) 234-7046
E-mail: gorgoy127@hotmail.com.com
Address: 106 Florida Blvd. Miami FL 33144
Qualifier: Ernesto Rodriguez P.E. # 58155

Dylan & Jamie Roy

Interior Remodeling & Addition

6783 SW 104th St Pinecrest, Fl 33156

No.	Description	Date

Project number	24-011
Date	10-24-2024
Drawn by	O.G.
Checked by	E.R.

ERNESTO RODRIGUEZ
LICENSE
No. 58155
STATE OF FLORIDA
PROFESSIONAL ENGINEER

NOT VALID FOR CONSTRUCTION OR BIDDING WITHOUT SIGNATURE & CITY APPROVAL STAMPS

Digitally signed by Ernesto Rodriguez
Date: 2024.12.20 10:04:43 -05'00'

This item has been digitally signed and sealed by Ernesto Rodriguez P.E. on the date adjacent to the seal. Printed Copies of this document are not considered signed and sealed and the signature must be be verified on any electronic copies

PLANS ARE PROTECTED UNDER THE COPYRIGHT LAWS OF FLORIDA:
ALL RIGHTS RESERVED
CONTRACTOR SHALL VERIFY AND BE RESPONSIBLE FOR ALL DIMENSIONS AND CONDITIONS ON THE JOB. THE DESIGN PROFESSIONAL MUST BE NOTIFIED IN WRITING OF ANY VARIATION FROM THE PLANS. ALL IDEAS DESIGN ARRANGEMENTS AND PLANS INDICATED OR REPRESENTED BY THIS DRAWINGS ARE OWNED BY AND THE PROPERTY OF THE DESIGN PROFESSIONAL AND WERE CREATED EVOLVED AND DEVELOPED FOR USE ON AND IN CONNECTION WITH THE SPECIFIED PROJECT. ANY CHANGES TO THESE PLANS WITHOUT THE WRITTEN APPROVAL OF THE DESIGN PROFESSIONAL OR ANY CONSTRUCTION EXECUTED FROM THESE PLANS WITHOUT EXPRESSED APPROVAL OF ACO DESIGN SHALL AUTOMATICALLY RENDER THE DESIGN PROFESSIONAL AND ACO DESIGN HARMLESS TO ANY LIABILITY CLAIMS, SUIT OR LITIGATION BY ANY INTERESTED PARTIES OF THE PROJECT. NO PART THEREOF OF THESE PLANS SHALL BE COPIED OR REPRODUCED BY ANY MEANS, OR USED IN CONNECTION WITH ANY WORK OTHER THAN FOR THE SPECIFIC PROJECT FOR WHICH THEY HAVE BEEN PREPARED WITHOUT WRITTEN CONSENT OF THE DESIGN PROFESSIONAL.

SHEET TITLE

MECHANICAL NOTES & DETAILS

SHEET No.

M100

Miami Dade County Department of Regulatory and Economic Resources - Job Copy
2025008506 - 5/19/2025 11:05:46 AM
M100.pdf

A/C UNIT SCHEDULE

AIR HANDLING UNIT	DESIGNATION	AHU-3
	MANUFACTURER	RHEEM
	MODEL NO.	RH1PZ1817STAN
	TOTAL AIR (CFM)	650
	E.S.P. (IN OF W.G.)	0.4
	H.P. (F.L.A.)	1/3-1.7
	AVAILABLE SERVICE	240/1/60
	TOTAL COOLING CAPACITY - BTU/H (*)	17,100
	SENSIBLE COOLING CAPAC. - BTU/H (*)	13,100
	TOTAL HEATING - BTU/H	12,287
	ELECTRIC HEATER TOTAL KW	3.6
CONDENSING UNIT	DESIGNATION	CU-3
	MANUFACTURER	RHEMM
	MODEL NO.	RA14AZ18AJ1
	AVAILABLE SERVICE	240-1-60
	NUMBER OF COMPRESSORS	1
	COMPRESSORS RLA (EACH)	9.0
	FAN H.P./FLA EACH	1/8 / 0.7
	SEER2 W/MATCHED AHU (#)	15.2
	CONDENSING UNIT MCA (AMPS)	14
	CONDENSING UNIT MAX. FUSE OR CKT. BREAKER AMPS	20
	LIQUID LINE	3/8"
	SUCTION LINE	3/4"

REMARKS:

1. ALTERNATE MANUFACTURERS OF EQUAL QUALITY MAY BE SUBMITTED FOR APPROVAL (TRANE, RUUD, LENNOX, RHEEM, GOODMAN, OR YORK)
2. PROVIDE TIME GUARD II, START CAPACITOR AND RELAY, LIQUID LINE FILTER DRYER & SOLENOID VALVE, 24 V CONTROL TRANSFORMER & THERMOSTAT WITH SYSTEM "OFF-HEAT-AUTO-COOL" AND FAN "ON-AUTO" S/S

FAN SCHEDULE

FAN DESIGNATION	EF-1
AREA SERVED	MASTER BATHROOM
LOCATION	CEILING
MANUFACTURER	PANASONIC
MODEL NO.	FV11VH2
TOTAL AIR (CFM)	100
E.S.P. (INCHES OF WATER)	0.125
SONES	0.5
H.P. (A=AMP - W=WATTS)	0.13
VOLT-PH-HZ	120-1-60
DRIVE	DIRECT
BACKDRAFT DAMPER	YES
INTERLOCK	LIGHT SWITCH

REMARKS:

1. *ALTERNATE MANUFACTURERS OF EQUAL OR BETTER QUALITY MAY BE SUBMITTED FOR APPROVAL.*
2. *UNLESS OTHERWISE NOTED ALL FANS SHALL BE EQUIPPED WITH SAFETY DISCONNECT SWITCH.*

AIR DISTRIBUTION SCHEDULE

DESIGNATION	A
MANUFACTURER	TITUS
MODEL AND CATALOG NO.	FL-15-J1T 1 (1.5") SLOT BORDER TYPE 11
FRAME TYPE	SURFACE (CEILING/WALL)
FUNCTION	SUPPLY
PATTERN	SEE DRAWINGS
OPPOSED BLADE DAMPERS	SEE NOTE 4

REMARKS:

1. ALTERNATE MANUFACTURERS OF EQUAL QUALITY MAY BE SUBMITTED FOR APPROVAL.
2. ALL AIR DEVICES SHALL BE ALL ALUMINUM CONSTRUCTION AND FULLY GASKETTED.
3. ALL AIR DEVICES FINISHES SHALL BE PER ARCHITEC/OWNER REQUIREMENTS.
4. *SUPPLY OUTLETS SHALL BE SUPPLIED WITH INTEGRAL O.B.D.*

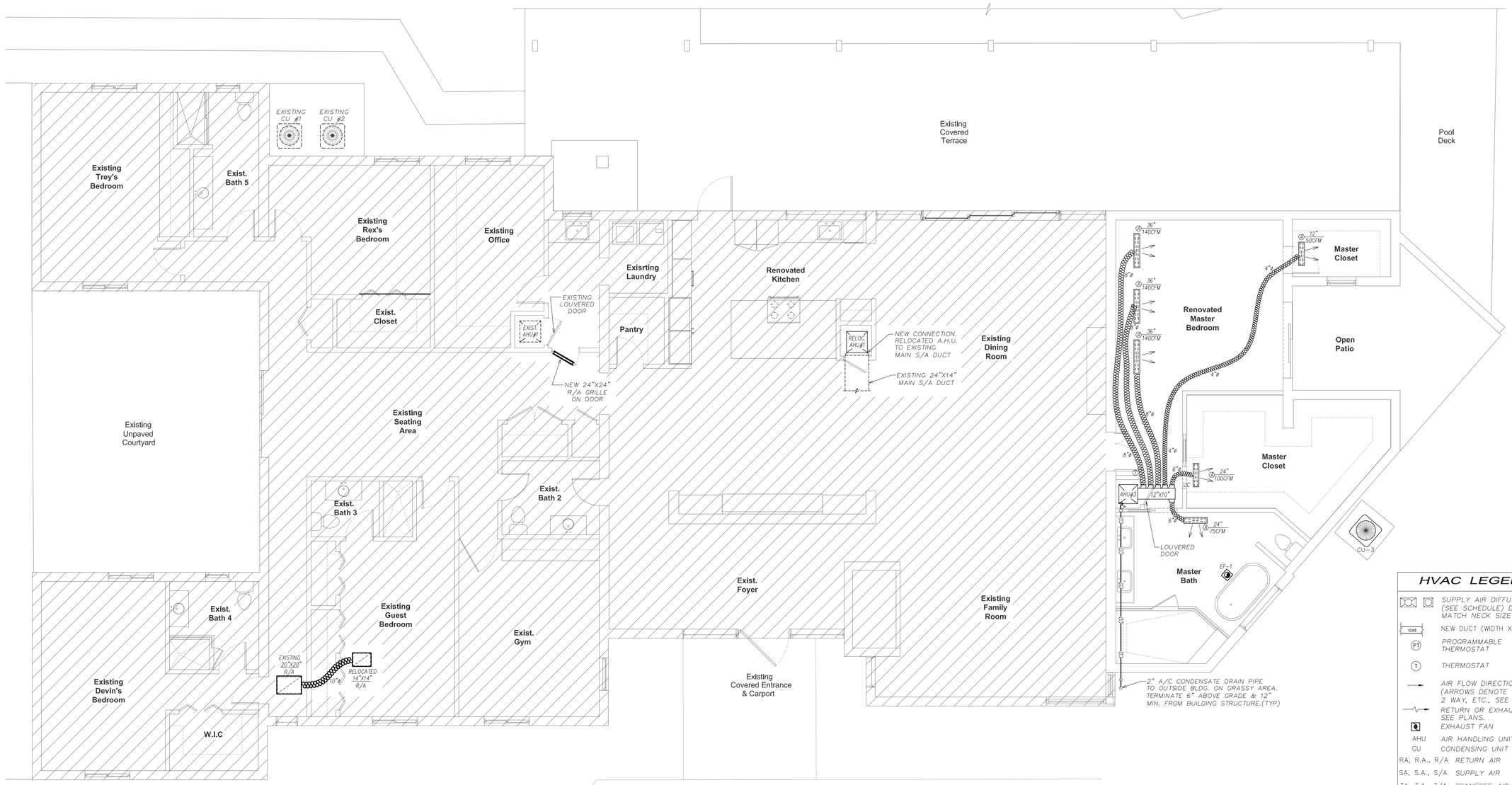

MECHANICAL FLOOR PLAN

SCALE: 1/4" = 1'-0"

0 2' 4' 8

HVAC LEGEND

	SUPPLY AIR DIFFUSERS (SEE SCHEDULE) DUCT TO MATCH NECK SIZE TYP.
10X8	NEW DUCT (WIDTH X DEPTH)
PT	PROGRAMMABLE THERMOSTAT
T	THERMOSTAT
	AIR FLOW DIRECTION (ARROWS DENOTE 1 WAY, 2 WAY, ETC., SEE PLANS)
	RETURN OR EXHAUST, SEE PLANS.
	EXHAUST FAN
AHU	AIR HANDLING UNIT
CU	CONDENSING UNIT
RA, R.A., R/A	RETURN AIR
SA, S.A., S/A	SUPPLY AIR
TA, T.A., T/A	TRANSFER AIR
UC	DOOR UNDERCUT (1" TYP.)
SAG	SUPPLY AIR GRILLE

NOVUS Archetype
architecture / interior / planning
NOVUS Archetype, LLC
12721 SW 30th ST, MIAMI, FL 33175
PH: (305) 505-6910
email: julio@novusarchetype.com
AA26001460
Qualifier: Julio Pulido, AIA
License #: AR93904
Qualifier : Salvador Ben Mitrani, NCARB
License # : AR99606

ACO DESIGN LLC.
MECHANICAL, ELECTRICAL & PLUMBING ENGINEERING DESIGN
PH: (786) 234-7046
E-mail: gorgory127@hotmail.com.com
Address: 106 Florida Blvd, Miami FL 33144
Qualifier: Ernesto Rodriguez P.E. # 58155

Dylan & Jamie Roy

Interior Remodeling & Addition

6783 SW 104th St Pinecrest, Fl 33156

No.	Description	Date

Project number	24-011
Date	10-24-2024
Drawn by	O.G.
Checked by	E.R.

ERNESTO RODRIGUEZ LICENSE No. 58155 STATE OF FLORIDA PROFESSIONAL ENGINEER

NOT VALID FOR CONSTRUCTION OR BIDDING WITHOUT SIGNATURE & CITY APPROVAL STAMPS

Digitally signed by Ernesto Rodriguez
Date: 2024.12.20 10:07:27 -05'00'

This item has been digitally signed and sealed by Ernesto Rodriguez P.E. on the date adjacent to the seal. Printed Copies of this document are not considered signed and sealed and the signature must be be verified on any electronic copies

PLANS ARE PROTECTED UNDER THE COPYRIGHT LAWS OF FLORIDA:
ALL RIGHTS RESERVED:
CONSTRUCTOR SHALL VERIFY ALL DIMENSIONS, ELEVATIONS, STANDARDS AND CONDITIONS ON THE JOB. THE DESIGN PROFESSIONAL MUST BE NOTIFIED IN WRITING OF ANY VARIATION FROM THE PLANS. ALL DRAWINGS AND SPECIFICATIONS ARE THE PROPERTY AND COPYRIGHT OF THE DESIGN PROFESSIONAL. THE DRAWINGS AND SPECIFICATIONS ARE THE PROPERTY OF THE DESIGN PROFESSIONAL AND WERE CREATED, EVOLVED AND DEVELOPED FOR USE ON AND IN CONNECTION WITH THE SPECIFIED PROJECT. NONE OF THE IDEAS, DESIGNS, OR ARRANGEMENTS ARE TO BE USED BY ANYONE EXCEPT BY THE DESIGN PROFESSIONAL OR HIS CONSULTANTS EXCEPT FOR THOSE PLANS WITHOUT EXPRESSED APPROVAL OF ACO DESIGN. SHALL AUTOMATICALLY CONSTITUTE A VIOLATION OF THE COPYRIGHT LAWS OF FLORIDA. ALL RIGHTS RESERVED UNDER THE OLD OR LATEST COPYRIGHT LAWS. ALL DRAWINGS AND SPECIFICATIONS CREATED BY THE DESIGN PROFESSIONAL AND INCLUDED IN THESE PLANS SHALL BE COPIED OR REPRODUCED BY ANY MEANS, OR USED IN CONNECTION WITH ANY OTHER PROJECT WHATSOEVER WITHOUT THE WRITTEN PERMISSION OF THE DESIGN PROFESSIONAL. THIS WORK WAS PREPARED WITHOUT WRITTEN CONSENT OF THE DESIGN PROFESSIONAL.

SHEET TITLE

MECHANICAL FLOOR PLAN

SHEET No.

M200

Miami Dade County Department of Regulatory and Economic Resources - Job Copy
2025008506 - 5/19/2025 11:05:46 AM
M200.pdf

NOTE: ALL SHEETS MUST BE REVIEWED

MIAMI-DADE COUNTY DEPARTMENT OF REGULATORY AND ECONOMIC RESOURCES
Herbert S. Saffir Permitting and Inspection Center
11805 SW 26th Street (Coral Way) • Miami, Florida 33175-2474 • (786) 315-2000

APPLICATION FOR MUNICIPAL PERMIT APPLICANTS THAT REQUIRE PLAN REVIEW FROM MIAMI-DADE FIRE RESCUE AND/OR ENVIRONMENTAL SERVICES

PROVIDE MUNICIPAL PROCESS NUMBER HERE BL2025-0125

LOCATION OF IMPROVEMENTS

Job Address 6783 SW 104 ST
Folio 20-5002-000-1100
Lot ____ Block ____
Subdivision UNPLATTED PBpg ____
Metes and bounds ____

CONTRACTOR INFORMATION

Contractor No. TBD
Last four (4) digits of Qualifier No. ____
Contractor Name ____
Qualifier Name ____
Address ____
City ____ State ____ Zip ____

TYPE OF IMPROVEMENTS

[ ] New Construction on Vacant Land
[x] Alteration Interior
[ ] Alteration Exterior
[ ] Relocation of Structure
[ ] Enclosure
[ ] Repair
[ ] Repair Due to Fire
[ ] Demolish
[ ] Shell Only
[X] Addition Attached
[ ] Addition Detached
[ ] Re-Roof
[ ] Foundation Only
[ ] Tent

Current use of property Residential
Description of Work Interior Remodel of Existing Residence = 5,188 Sq. Ft. Addition to Master Bedroom = 112 Sq. Ft.
Sq. Ft. 5,300 Units ____ Floors ____
Value of Work $150,000.00

PERMIT TYPE

[x] MBLD* Category 02
[ ] MELE ____
[ ] MPLU ____
[ ] MLPG ____
[ ] MMEC ____
[ ] FIRE ____

REVIEW STATUS

[ ] Chg. Contractor
[ ] Re-Issue
[ ] Re-Stamp
[ ] Revision
[ ] Not Applicable for Fire

OWNER'S NAME

Owner DYLAN ROY , JAMIE ROY
Address 6783 SW 104 ST
City PINECREST, State Fl Zip 33156
Phone ____
Last four (4) digits of Owner's Social Security No. ____

PERSON TO PICK UP PLANS

Name Ricardo Romero
Address 300 Aragon Ave
City Coral Gables State FL Zip 33134
Phone 786 201 3324

ARCHITECT / ENGINEER

Owner ____
Address ____
City ____ State ____ Zip ____
Phone ____

FIRE SPECIAL REQUEST PLAN REVIEW (SRI)

I am requesting a Special Request Plan Review (SRI) to be scheduled as soon as possible. There is a minimum charge of one-hour. Please contact the Fire Department for current rate.

1st Request: ____ Date: ____
2nd Request: ____ Date: ____
3rd Request: ____ Date: ____

PERA OPTIONAL PLAN REVIEW (OPR)

I am requesting Optional Plan Review (OPR) to be scheduled as soon as possible at the rate of $75 for each discipline. Additional review fees may apply.

1st Request: ____ Date: ____
2nd Request: ____ Date: ____
3rd Request: ____ Date: ____

123_01-192 6/16

Miami Dade County Department of Regulatory and Economic Resources - Job Copy
2025008506 - 5/19/2025 11:05:46 AM
Municipal Application.pdf

Invoice

Water & Sewer Department
New Business Office
P.O. Box 330316
Miami, FL 33233-0316

Invoice Number	N00165785
Customer Number	00067255
Invoice Date	February 11, 2025
Business Process Number (X)	
Total Amount Due	**$30.00**

DYLAN ROY JAMIE ROY
6783 SW 104 ST
PINECREST FL 33156

ATTN:

Note:
WTR/SWR CC'S PAID FOR NNI ADDITION OF 181 SF TO EXISTING SFR ON SEPTIC TOTALING 5,299 SF UNDER AC AS PER PLANS REPLACING SFR PER PAID VF# 201764104/ INV# N00035390 AT 6783 SW 104 ST FOLIO 2050020001100 VF# 25-2025-L-VF - 2876 PROCESS# M2025008506

ER Water
ER Sewer
Agreement ID

Description	JO/Agmt	Qty	UOM	Unit Price	Charge Amt	Interest	Line Total
VF Res (R-A) Water		1	EA	30.00	30.00	0.00	30.00
Total Standard Charges							$30.00

Total Invoice **$30.00**

Printed on 02/11/2025 by E408209 at LEJEUNE

To pay online go to: http://www.miamidade.gov/water/construction-development-payments.asp

Payment must be made within 72 hours of receipt of invoice.

Refunds are based on the date of payment and subject to State Statute 95-11. Some fees are not refundable.

Miami Dade County Department of Regulatory and Economic Resources - Job Copy
2025008506 - 5/15/2025 11:05:46 AM
N00165785.pdf

PLUMBING GENERAL NOTES:

1. ALL WORK SHALL CONFORM WITH ALL LOCAL, STATE, FEDERAL ORDINANCES CODES AND FLORIDA BUILDING CODE–2020 GOVERNING THE INSTALLATION OF THE PLUMBING SYSTEM. IF WORK AS LAID OUT, INDICATED OR SPECIFIED IS CONTRARY TO OR CONFLICTS WITH LOCAL ORDINANCES, BUILDING CODES AND REGULATIONS, THE CONTRACTOR SHALL REPORT IN WRITING TO THE ARCHITECT/ENGINEER BEFORE SUBMITTING A BID. THE ARCHITECT/ENGINEER WILL THEN ISSUE INSTRUCTIONS AS HOW TO PROCEED.

2. THE DRAWINGS ARE TO BE CONSIDERED DIAGRAMMATIC, NOT NECESSARILY SHOWING IN DETAIL OR TO SCALE ALL OF THE MINOR ITEMS. UNLESS SPECIFIC DIMENSIONS ARE SHOWN, THE STRUCTURAL, ARCHITECTURAL AND SITE CONDITIONS SHALL GOVERN THE EXACT LOCATIONS. CONTRACTOR SHALL FOLLOW DRAWINGS IN LAYING OUT WORK. CHECK DRAWINGS OF ALL TRADES TO VERIFY SPACES IN WHICH WORK WILL BE INSTALLED AND MAINTAIN MAXIMUM HEAD ROOM, AND SPACE CONDITIONS AT ALL POINTS. WHERE HEAD ROOM, OR SPACE CONDITIONS APPEAR INADEQUATE, ARCHITECT/ ENGINEER SHALL BE NOTIFIED BEFORE PROCEEDING WITH INSTALLATION. THIS CONTRACTOR SHALL, WITHOUT EXTRA CHARGE, MAKE FIELD MODIFICATION IN LAYOUT AS NEEDED TO PREVENT CONFLICT WITH WORK OF VARIOUS TRADES OR FOR PROPER EXECUTION OF THE WORK .

3. EXAMINE ALL DRAWINGS CAREFULLY PRIOR TO SUBMITTING A BID. CONTRACTOR WILL BE REQUIRED TO FURNISH, INSTALL AND/OR CONNECT WITH APPROPRIATE SERVICES ALL PLUMBING ITEMS SHOWN ON ANY OF THE ARCHITECTURAL, AIR CONDITIONING, ELECTRICAL AND SPRINKLER DRAWINGS WITHOUT ADDITIONAL EXPENSE TO THE OWNER. IF DISCREPANCIES , CONFLICTS, INTERFERENCE OR OMISSIONS OCCUR BETWEEN DRAWINGS, NOTIFY IN WRITING THE ARCHITECT/ ENGINEER IN AMPLE TIME TO PERMIT REVISIONS BEFORE THE BIDS ARE SUBMITTED.

4. INSTALL MATERIALS AND EQUIPMENT IN A NEAT AND FIRST CLASS WORKMANLIKE MANNER. THE OWNER RESERVES THE RIGHT TO DIRECT REMOVAL AND REPLACEMENT OF ITEMS WHICH, IN HIS OPINION, DO NOT PRESENT A NEAT AND WORKMANLIKE APPEARANCE. REMOVAL AND REPLACEMENT IS TO BE DONE IMMEDIATELY WHEN DIRECTED BY THE OWNER IN WRITING, AT THE SOLE EXPENSE OF CONTRACTOR.

5. START OF WORK BY CONTRACTOR SHALL BE CONSIDERED AS ACCEPTANCE BY HIM OF ALL CLAIMS OR QUESTIONS AS TO SUITABILITY OF THE WORK OF OTHER. TRADES OR OTHER CONTRACTORS TO RECEIVE HIS WORK. THIS CONTRACTOR SHALL REMOVE AND REPLACE, AT HIS EXPENSE, ALL PLUMBING WORK WHICH MAY HAVE TO BE REMOVED BECAUSE OF INTERFERENCE WITH OTHER TRADES.

6. THIS CONTRACTOR SHALL OBTAIN AND PAY ALL INSURANCE, FEES, PERMITS , ASSOCIATION DUES, ROYALTIES AND TAXES OF WHATEVER NATURE SHALL APPLY TO THIS WORK. HE SHALL ALSO PAID ALL THE INSPECTION FEES AS MAY REQUIRED BY LAW OR BY ASSEMBLY No. W–L–2088, UL APPROVED

7. PROVIDE MEANS "FURNISH AND INSTALL".

8. DO A COMPLETE JOB, EVERYTHING CONNECTED, READY FOR USE.

9. SHOP DRAWINGS: CONTRACTOR SHALL FURNISH THE ENGINEER WITH SHOP DRAWINGS OF EQUIPMENT PRIOR TO PURCHASE FOR APPROVAL.

10. AT COMPLETION OF JOB THE PLUMBING CONTRACTOR SHALL GIVE THE OWNER AN AS–BUILT SET OF REPRODUCIBLE SEPIAS SHOWING THE EXACT LOCATION OF ALL INSTALLATIONS.

11. PLUMBING CONTRACTOR SHALL PRESSURE TEST ALL PIPING AS REQUIRED BY CODE. TEST SHALL BE WITNESSED AND APPROVED BY PROPER AUTHORITIES.

12. THE PLUMBING CONTRACTOR SHALL WARRANT ALL WORKMANSHIP AND MATERIALS FOR ONE YEAR FROM THE DATE BY OF FINAL WORK ACCEPTANCE BY OWNER. ANY BREAKDOWN OCCURRING IN FIRST YEAR SHALL BE REPAIRED AT NO EXPENSE TO THE OWNER.

13. PROVIDE BATHROOM FIXTURES AS SPECIFIED.

14. PROVIDE SHUT–OFF VALVE FOR EACH FIXTURE.

15. WHEREVER NOT SIMILAR METALS ARE TO BE JOINED, A DI–ELECTRIC FITTING SHALL BE PROVIDED TO CONNECT BOTH TYPES OF PIPES.

16. PLUMBING CONTRACTOR SHALL PROVIDE AIR CONDITIONING CONDENSATE DRAIN AND TRAP. SEE AIR CONDITIONING PLANS FOR LOCATION OF UNITS AND DRAINS.

17. MATERIALS

A. COLD WATER PIPING DOWNSTREAM OF WATER METER SHALL BE TYPE "L" COPPER BELOW GROUND AND TYPE "M" COPPER ABOVE GROUND.

B. COLD WATER PIPES INSIDE OF SLAB SHALL BE TYPE "K" SOFT COPPER INSTALL INSIDE POLYETHYLENE CONDUIT. NO JOINTS PERMITTED INSIDE SLAB.

C. SANITARY WASTE AND VENT 4"~ AND SMALLER SHALL BE P.V.C., SCHEDULE 40

D. STORM LINES INSIDE BUILDING SHALL BE P.V.C. SCHEDULE 40

E. IN COASTAL AREAS ALL SANITARY AND STORM PIPING OUTSIDE OF BUILDING SHALL BE SCHEDULE 40, PVC.

F. CONDENSATE DRAIN PIPE SHALL BE SCHEDULE 40, PVC PIPE AND FITTINGS.

G. WATER HEATER RELIEF AND DRAIN LINE SHALL BE TYPE "L" COPPER, MIN 3/4" DIA.

H. FOR C–PVC PIPE USE FOR WATER SERVICE AND DISTRIBUTION CONTRACTOR SHALL COMPLY WITH SECTION 605.3 FBC (PLUMBING) AND SHALL CONFORM TO ONE OF THE STANDARDS OF TABLE 605.3 FBC (PLUMBING). STANDARDS: ASTM D 1785; ASTM D 224; ASTM D 2672; CSA B137.3.

FIELD COORDINATION NOTE:

EVERY CONTRACTOR SHALL COORDINATE IN FIELD W/ OTHER TRADES PRIOR TO START OF CONSTRUCTION FOR THE STRUCTURAL BEAM, SLAB,TRUSSES, ARCHITECTURAL DETAILING AS PRE–FAB FORMS, REVELING, CEILINGS, ARCH WITH THE LOCATION OF CEILING OR WALL GRILLES, DUCT WORKS, RETURN GRILLES, LIGHTING FIXTURE, SWITCHES, RECEPTACLES OR ANY OTHER DEVICES, AND TO NOTIFY ARCHITECT/ENGINEER IF ANY CONFLICT OCCUR PRIOR ITS INSTALLATION, NO ADDITIONAL COST TO OWNER CAN BE APPLIED.

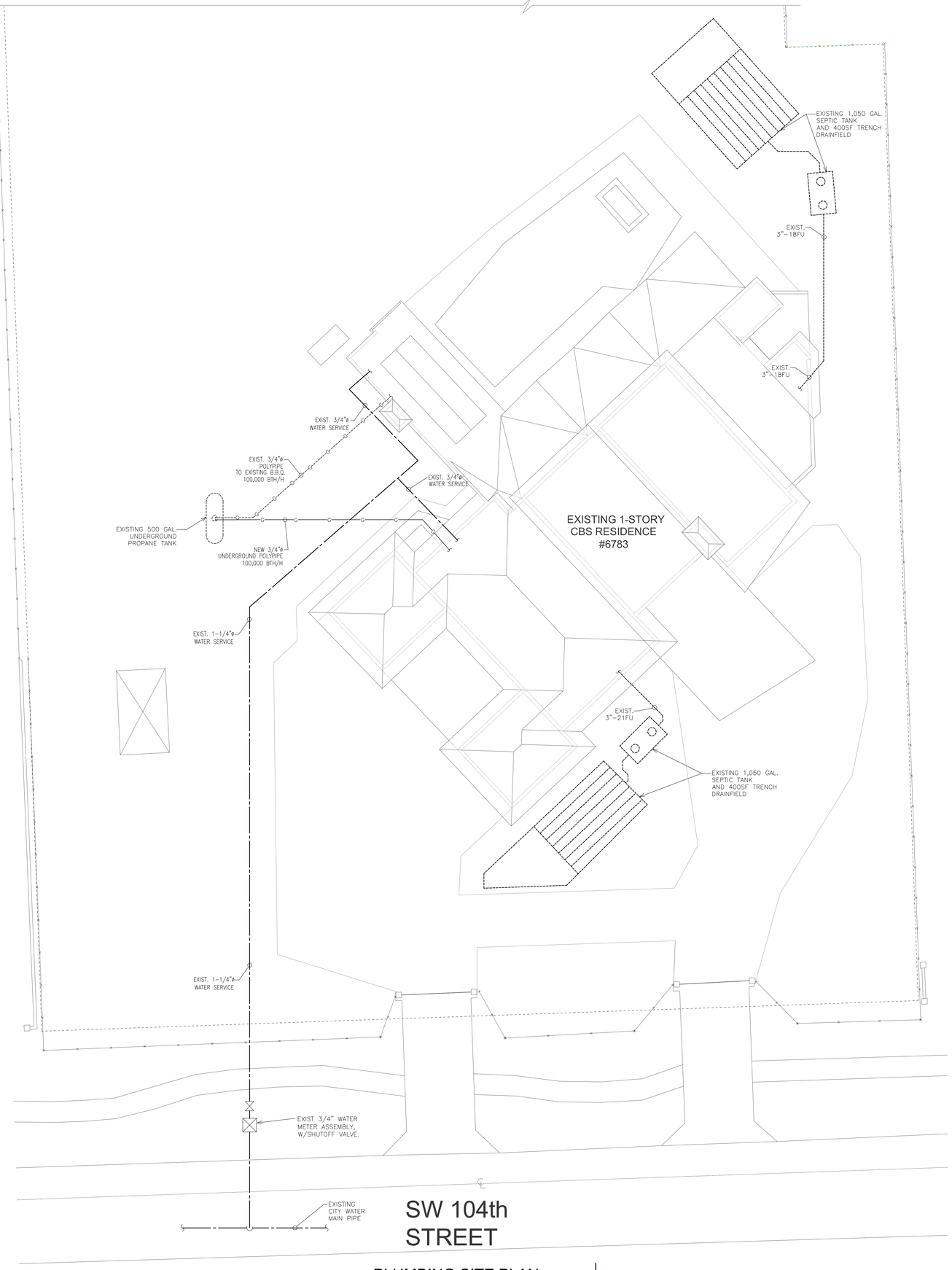

PLUMBING SITE PLAN

SCALE: 3/32" = 1'-0"

0 4' 8' 16'

NOVUS Archetype
architecture / interior / planning
NOVUS Archetype, LLC
12721 SW 30th ST, MIAMI, FL 33175
PH: (305) 505-6910
email: julio@novusarchetype.com
AA26001460
Qualifier: Julio Pulido, AIA
License #: AR93904
Qualifier : Salvador Ben Mitrani, NCARB
License # : AR99606

ACO DESIGN LLC.
MECHANICAL, ELECTRICAL & PLUMBING ENGINEERING DESIGN
PH: (786) 234-7046
E-mail: gorgory12ff@hotmail.com.com
Address: 106 Florida Blvd, Miami FL 33144
Qualifier: Ernesto Rodriguez P.E. # 58155

Dylan & Jamie Roy

Interior Remodeling & Addition

6783 SW 104th St Pinecrest, Fl 33156

No.	Description	Date

Project number	24-011
Date	10-24-2024
Drawn by	O.G.
Checked by	E.R.

ERNESTO RODRIGUEZ LICENSE No. 58155 STATE OF FLORIDA PROFESSIONAL ENGINEER

NOT VALID FOR CONSTRUCTION OR BIDDING WITHOUT SIGNATURE & CITY APPROVAL STAMPS

Digitally signed by Ernesto Rodriguez
Date: 2024.12.20 10:05:59 -05'00'

This item has been digitally signed and sealed by Ernesto Rodriguez P.E. on the date adjacent to the seal. Printed Copies of this document are not considered signed and sealed and the signature must be be verified on any electronic copies

PLANS ARE PROTECTED UNDER THE COPYRIGHT LAWS OF FLORIDA: ALL RIGHTS RESERVED.

CONTRACTOR SHALL VERIFY AND BE RESPONSIBLE FOR ALL DIMENSIONS AND CONDITIONS ON THE JOB, THE DESIGN PROFESSIONAL MUST BE NOTIFIED IN WRITING OF ANY VARIATION FROM THE DIMENSIONS AND CONDITIONS SHOWN ON THESE PLANS. THESE PLANS ARE INSTRUMENTS OF THE DESIGN PROFESSIONAL AND SHALL REMAIN THE PROPERTY OF THE DESIGN PROFESSIONAL AND WERE CREATED EVOLVED AND DEVELOPED FOR USE ON AND IN CONNECTION WITH THE SPECIFIED PROJECT. NONE OF THE IDEAS, DESIGNS, OR PLANS MAY BE USED, WITHOUT THE WRITTEN APPROVAL OF THE DESIGN PROFESSIONAL OR AND CONSTRUCTION DIRECTED FROM THE DESIGN PROFESSIONAL, FOR ANY PURPOSE OTHER THAN THE SPECIFIED PROJECT OWNED BY THE OWNER, THE DESIGN PROFESSIONAL AND ACO DESIGN WAIVES ALL LIABILITY CLAIMS, DUE TO ANY LITIGATIONS AND REPORTED PROFITS BY THE PROJECT, WITHIN THE PROJECT OWNER'S ORGANIZATION, THE DESIGN PROFESSIONAL AND ACO DESIGN WAIVES ALL LIABILITY WITH ANY WORK OTHER THAN FOR THE SPECIFIC PROJECT FOR WHICH THEY WERE BEEN PREPARED WITHOUT WRITTEN CONSENT OF THE DESIGN PROFESSIONAL.

SHEET TITLE

PLUMBING SITE PLAN

SHEET No.

P100

Miami Dade County Department of Regulatory and Economic Resources - Job Copy
2025008506 - 5/19/2025 11:05:46 AM
P100.pdf

PLUMBING FIXTURE CONNECTION SCHEDULE

* SHOWN FOR REFERENCE ONLY, REFER TO ARCHITECT/OWNER FOR LIST OF EXACT FIXTURE TYPE AND MANUFACTURER.
** AS PER FLORIDA PLUMBING CODE TABLE 604.4

No.	DESCRIPTION	DRAIN	WATER		SLOPE	FU	FIXTURE TYPE *	MAXIMUM WATER FLOW RATE **	REMARKS
			COLD	HOT					
WC	WATER CLOSET	3"	1/2"	N/A	3"&4"@1/8"/FT	3	FLOOR MOUNTED	1.28 GPF	
L	LAVATORY	1-1/2"	1/2"	1/2"	1-1/2"@1/4"/FT	1	WALL MOUNTED	1.0 GPM	
SH	SHOWER	2"	1/2"	1/2"	2"@1/4"/FT	2	N/A	1.5 GPM	W/ANTI-SCALD VALVES
BT	BATH TUB	2"	1/2"	1/2"	2"@1/4"/FT	2	N/A	1.5 GPM	W/ANTI-SCALD VALVES
SK	SINK	1-1/2"	1/2"	1/2"	1-1/2"@1/4"/FT	2	COUNTERTOP	1.0 GPM	
W	CLOTHES WASHER	3"	1/2"	1/2"	2"@1/4"/FT	2	N/A	N/A	PROVIDE WASHER BOX W/ (2) 1/2" HB & 3" DRAIN

PLUMBING SYMBOL LEGEND

SYMBOL	DESCRIPTION
	SANITARY LINE
	EXISTING SANITARY LINE
	WATER LINE
	HOT WATER LINE
CO	CLEANOUT
	WATER CLOSET DRAIN
	P-TRAP
	DISHWASHER DRAIN
	GATE VALVE
VTR	VENT THRU ROOF
FU	FIXTURE UNIT
CW	COLD WATER
HW	HOT WATER
	NEW CONNECTION

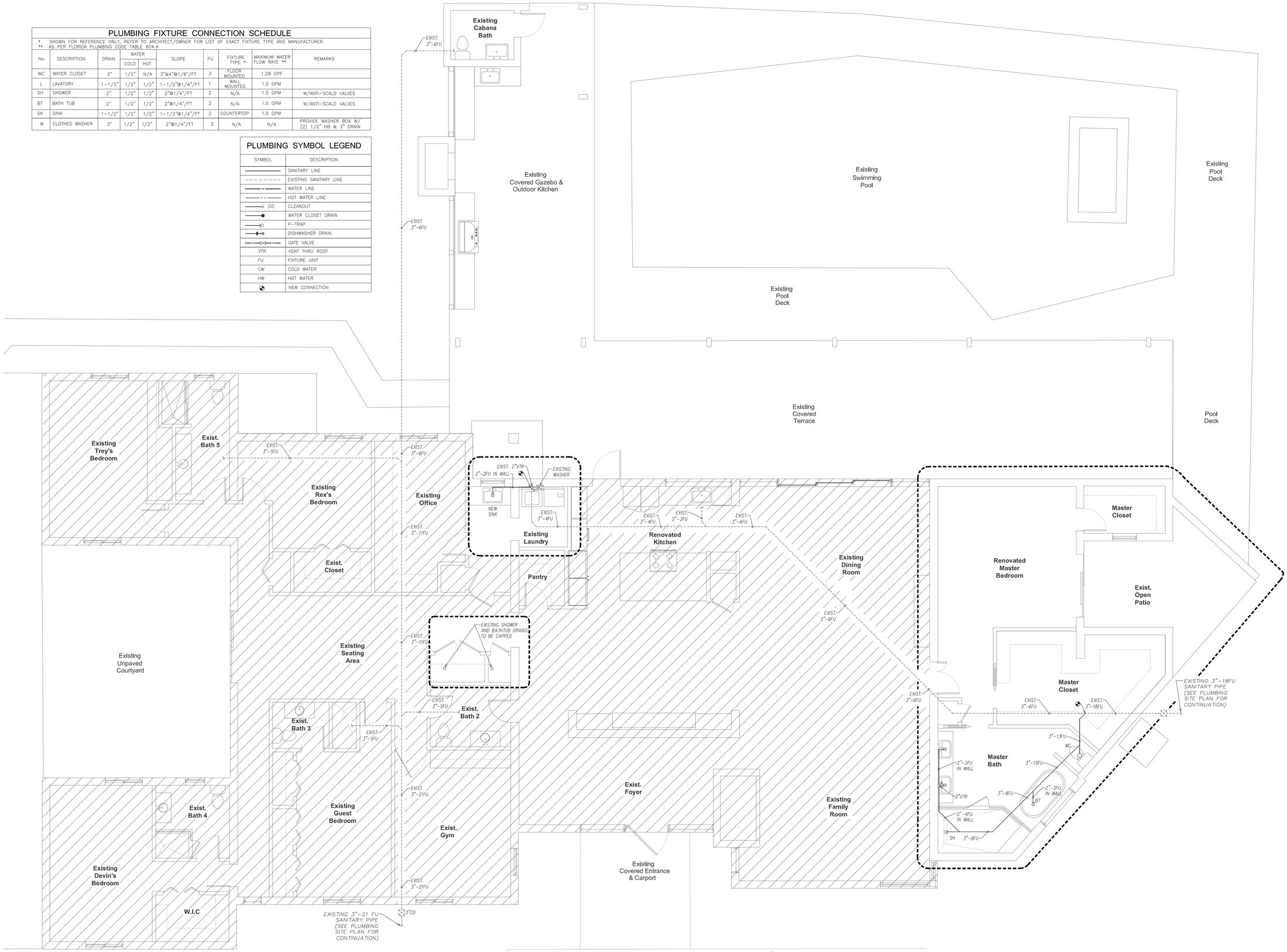

SANITARY PLUMBING FLOOR PLAN

0 2' 4' 8' SCALE: 1/4" = 1'-0"

SANITARY PLUMBING SCOPE OF WORK

1-LAUNDRY: NEW SINK IN LAUNDRY'S HALLWAY

2-BATHROOM #2: EXISTING SHOWER TO BATHTUB TO BE REMOVED AND DRAINS TO BE CAPPED.

3-MASTER BATHROOM: NEW MASTER BATHROOM.

NOVUS Archetype
architecture / interior / planning
NOVUS Archetype, LLC
12721 SW 30th ST, MIAMI, FL 33175
PH: (305) 505-6910
email: julio@novusarchetype.com
AA26001460
Qualifier: Julio Pulido, AIA
License #: AR93904
Qualifier : Salvador Ben Mitrani, NCARB
License # : AR99606

ACO DESIGN LLC.
MECHANICAL, ELECTRICAL & PLUMBING ENGINEERING DESIGN
PH: (786) 234-7046
E-mail: gorgory127@hotmail.com.com
Address: 106 Florida Blvd, Miami FL 33144
Qualifier: Ernesto Rodriguez P.E. # 58155

Dylan & Jamie Roy

Interior Remodeling & Addition

6783 SW 104th St Pinecrest, Fl 33156

No.	Description	Date

Project number	24-011
Date	10-24-2024
Drawn by	O.G.
Checked by	E.R.

ERNESTO RODRIGUEZ LICENSE No. 58155 STATE OF FLORIDA PROFESSIONAL ENGINEER

NOT VALID FOR CONSTRUCTION OR BIDDING WITHOUT SIGNATURE & CITY APPROVAL STAMPS

Digitally signed by Ernesto Rodriguez
Date: 2024.12.20 10:05:17 -05'00'

This item has been digitally signed and sealed by Ernesto Rodriguez P.E. on the date adjacent to the seal. Printed Copies of this document are not considered signed and sealed and the signature must be verified on any electronic copies

PLANS ARE PROTECTED UNDER THE COPYRIGHT LAWS OF FLORIDA: ALL RIGHTS RESERVED.

CONTRACTOR SHALL VERIFY ALL PLANS, EXISTING CONDITIONS, ALL DIMENSIONS AND CONDITIONS ON THE JOB, THE DESIGN PROFESSIONAL MUST BE NOTIFIED IMMEDIATELY OF ANY VARIATION FROM THE PLAN, ALL EQUIP. DESIGN IMPROVEMENTS AND PLANS PREPARED BY ACO DESIGN ARE INTENDED FOR USE ON THIS PROJECT ONLY AND REMAIN THE PROPERTY OF THE DESIGN PROFESSIONAL AND WERE CONSTRUCTED, EVOLVED AND DEVELOPED FOR USE ON AND IN CONNECTION WITH THE SPECIFIED PROJECT. ANY CHANGES TO THESE PLANS WITHOUT THE WRITTEN CONSENT OF THE DESIGN PROFESSIONAL, AND ANY USE OF THESE PLANS ON OTHER PROJECTS, THESE PLANS WITHOUT EXPRESSED APPROVAL OF ACO DESIGN SHALL AUTOMATICALLY RENDER THE DESIGN PROFESSIONAL AND ACO DESIGN AVAILABLE TO ANY LIABILITY CLAIMS. THESE PLANS AND SPECIFICATIONS ARE NOT TO BE COPIED OR REPRODUCED IN ANY MANNER. THESE PLANS SHALL BE COPIED OR REPRODUCED BY ANY MEANS, OR USED NOT IN CONNECTION WITH ANY WORK OTHER THAN FOR THE SPECIFIC PROJECT FOR WHICH THEY WERE BEEN PREPARED, WITHOUT WRITTEN CONSENT OF THE DESIGN PROFESSIONAL.

SHEET TITLE

SANITARY PLUMBING FLOOR PLAN

SHEET No.

P200

Miami Dade County Department of Regulatory and Economic Resources - Job Copy
2025000506 - 5/19/2025 11:05:46 AM
P200.pdf

PLUMBING FIXTURE CONNECTION SCHEDULE

* SHOWN FOR REFERENCE ONLY, REFER TO ARCHITECT/OWNER FOR LIST OF EXACT FIXTURE TYPE AND MANUFACTURER.
** AS PER FLORIDA PLUMBING CODE TABLE 604.4

No.	DESCRIPTION	DRAIN	WATER		SLOPE	FU	FIXTURE TYPE *	MAXIMUM WATER FLOW RATE **	REMARKS
			COLD	HOT					
WC	WATER CLOSET	3"	1/2"	N/A	3"&4"@1/8"/FT	3	FLOOR MOUNTED	1.28 GPF	
L	LAVATORY	1-1/2"	1/2"	1/2"	1-1/2"@1/4"/FT	1	WALL MOUNTED	1.0 GPM	
SH	SHOWER	2"	1/2"	1/2"	2"@1/4"/FT	2	N/A	1.5 GPM	W/ANTI-SCALD VALVES
BT	BATH TUB	2"	1/2"	1/2"	2"@1/4"/FT	2	N/A	1.5 GPM	W/ANTI-SCALD VALVES
SK	SINK	1-1/2"	1/2"	1/2"	1-1/2"@1/4"/FT	2	COUNTERTOP	1.0 GPM	
W	CLOTHES WASHER	3"	1/2"	1/2"	2"@1/4"/FT	2	N/A	N/A	PROVIDE WASHER BOX W/ (2) 1/2" HB & 3" DRAIN

WATER HAMMER ARRESTER SCHEDULE

MARK	* P.D.I.SIZE	CONN.SIZE
"A"	A (1-11 F.U.)	1/2"
"B"	B (12-32 F.U.)	3/4"
"C"	C (33-60 F.U.)	1"

* PLUMBING AND DRAINAGE INSTITUTE STANDARD WH-201

NOTE: PROVIDE WATER HAMMER ARRESTER WHERE QUICK CLOSING VALVES ARE UTILIZED AS PER FBCP-604.9.

PLUMBING SYMBOL LEGEND

SYMBOL	DESCRIPTION
	SANITARY LINE
	EXISTING SANITARY LINE
	WATER LINE
	HOT WATER LINE
CO	CLEANOUT
	WATER CLOSET DRAIN
	P-TRAP
	DISHWASHER DRAIN
	GATE VALVE
VTR	VENT THRU ROOF
FU	FIXTURE UNIT
CW	COLD WATER
HW	HOT WATER
	NEW CONNECTION

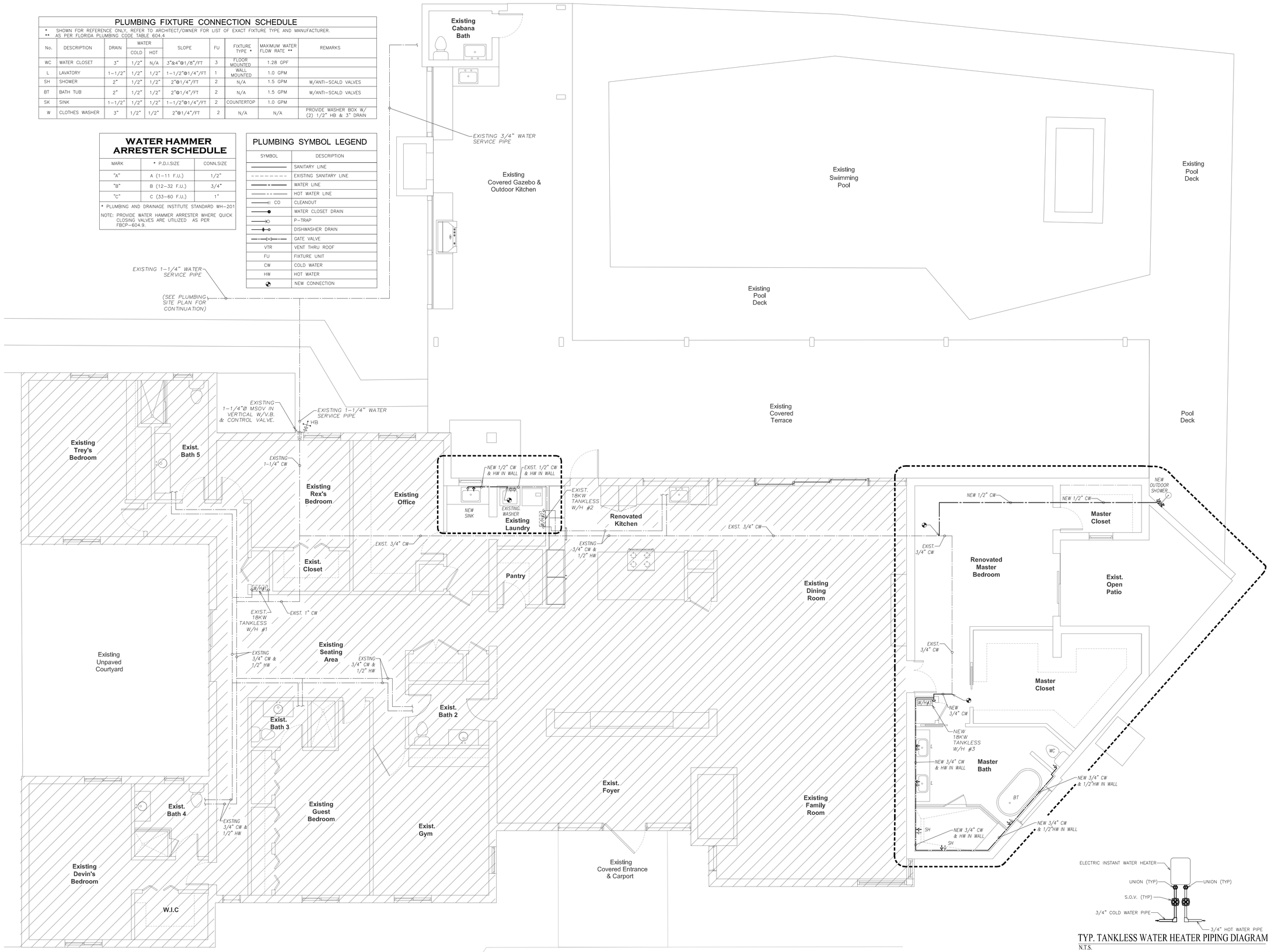

WATER PLUMBING FLOOR PLAN

SCALE: 1/4" = 1'-0"

0 2 4 8

TYP. TANKLESS WATER HEATER PIPING DIAGRAM

N.T.S.

TWH #3:
ELECTRIC TANKLESS WATER HEATER "ECO-11", 18KW, 240/1/60.
11KW- 60 amps- 1 double pole 60 amp breakers required. 2, 6/2 wire line
FLOW RATE 0.3 GPM AT 72°F, 1 YEAR WARRANTY. ENERGY FACTOR 0.96, DIMENSIONS 17" (HEIGHT) x 21" (WIDTH) X 3.7" (DEPTH).

NOVUS Archetype
architecture / interior / planning
NOVUS Archetype, LLC
12721 SW 30th ST, MIAMI, FL 33175
PH: (305) 505-6910
email: julio@novusarchetype.com
AA26001460
Qualifier: Julio Pulido, AIA
License #: AR93904
Qualifier : Salvador Ben Mitrani, NCARB
License # : AR99606

ACO DESIGN LLC.
MECHANICAL, ELECTRICAL & PLUMBING ENGINEERING DESIGN
PH: (786) 234-7046
E-mail: gorgory127@hotmail.com.com
Address: 106 Florida Blvd, Miami FL 33144
Qualifier: Ernesto Rodriguez P.E. # 58155

Dylan & Jamie Roy

Interior Remodeling & Addition

6783 SW 104th St Pinecrest, Fl 33156

No.	Description	Date

Project number	24-011
Date	10-24-2024
Drawn by	O.G.
Checked by	E.R.

ERNESTO RODRIGUEZ LICENSE No. 58155 STATE OF FLORIDA PROFESSIONAL ENGINEER

NOT VALID FOR CONSTRUCTION OR BIDDING WITHOUT SIGNATURE & CITY APPROVAL STAMPS

Digitally signed by Ernesto Rodriguez
Date: 2024.12.20 10:05:39 -05'00'

This item has been digitally signed and sealed by Ernesto Rodriguez P.E. on the date adjacent to the seal. Printed Copies of this document are not considered signed and sealed and the signature must be be verified on any electronic copies

PLANS ARE PROTECTED UNDER THE COPYRIGHT LAWS OF FLORIDA:
ALL RIGHTS RESERVED
CONTRACTOR SHALL VERIFY AND BE RESPONSIBLE FOR ALL DIMENSIONS AND CONDITIONS ON THE JOB. THE ARCHITECT/ENGINEER SHALL NOT BE RESPONSIBLE FOR ANY DEVIATION FROM THE PLANS. ALL CEIVED DESIGN ENVIRONMENTS AND PLANS REGARDED OR REPRESENTED BY THEIR DRAWINGS ARE OWNED BY AND THE PROPERTY OF THE DESIGN PROFESSIONAL AND ACO DESIGN AND ARE NOT TO BE USED BY ANYONE FOR ANY PURPOSE CONNECTION WITH THE SPECIFIED PROJECT, ANY CHANGES TO THESE PLANS WITHOUT THE WRITTEN APPROVAL OF THE DESIGN PROFESSIONAL OR ANY CONSTRUCTION EXECUTED FROM THESE PLANS WITHOUT THE WRITTEN CONSENT OF THE DESIGN PROFESSIONAL WILL BE HEREBY THE DESIGN PROFESSIONAL AND ACO DESIGN HARMLESS TO ANY LIABILITY CLAIMS. SUCH UTILIZATION BY ANY REPRESENTED PARTIES OF THE PROJECT, WITHOUT PERMISSION OR ANY CHANGES MADE TO THESE PLANS WITHOUT THE WRITTEN CONSENT OF THE DESIGN PROFESSIONAL, SHALL BE DEEMED AS THE USE OF THESE PLANS FOR ANY OTHER WORK OTHER THAN FOR THE SPECIFIC PROJECT FOR WHICH THEY WERE BEEN PREPARED WITHOUT WRITTEN CONSENT OF THE DESIGN PROFESSIONAL.

SHEET TITLE

WATER PLUMBING FLOOR PLAN

SHEET No.

P300

Miami Dade County Department of Regulatory and Economic Resources - Job Copy
2025008506 - 5/19/2025 11:05:46 AM
P300.pdf

GAS PIPING NOTES

HIGH PRESSURE GAS PIPE LONGEST= 400'-0" -- 100,000 BTU/H
LOW PRESSURE GAS PIPE LONGEST= 39'-0" -- 100,000 BTU/H

1. UNDERGROUND PIPING MATERIAL SHALL BE POLYETHYLENE PLASTIC PIPE (ANSI B16.3, A19.7), SIZED PER NFPA-58 TABLE-16.1(n)
2. ABOVE GROUND PIPING MATERIAL OUTDOOR AND INSIDE PARTITIONS SHALL BE (ASTM A53) TREATED SCHEDULE 40 BLACK STEEL WITH MALLEABLE IRON FITTINGS (ANSI B16.3, A19.7), SIZED PER FBC, FG TABLE FG402.4(28).
3. ABOVE GROUND PIPING MATERIAL IN CEILING SHALL BE CORRUGATED STAINLESS STEEL TUBING (CSST) WITH MALLEABLE IRON FITTINGS SIZED PER FBC, FG TABLE FG402.4(32).
4. INSTALL GAS PIPING IN ACCORDANCE WITH NFPA 58 AND TEST WITH PRESSURES AND TEST DURATIONS ACCORDING TO NFPA 54.

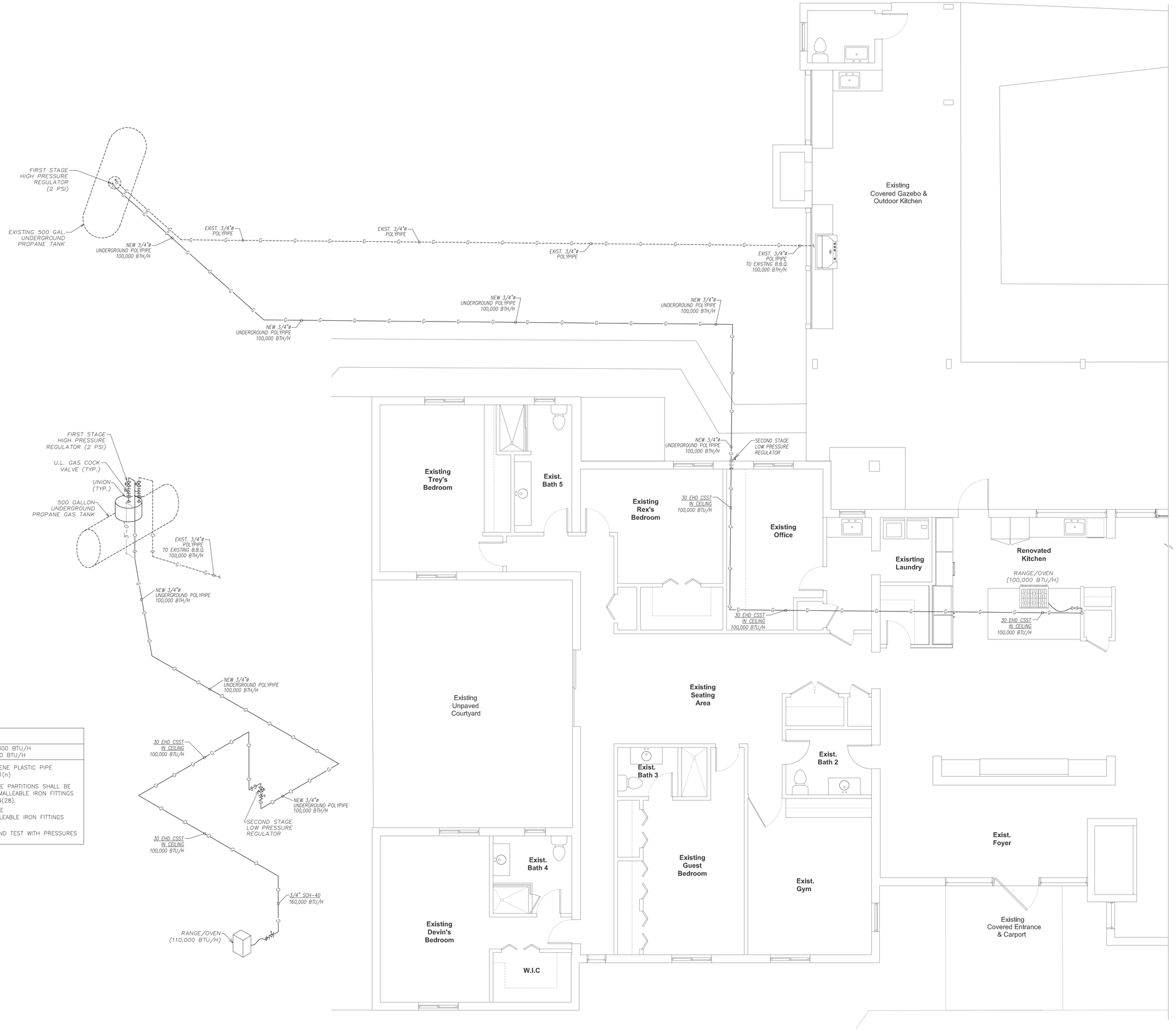

NOVUS Archetype
architecture / interior / planning
NOVUS Archetype, LLC
12721 SW 30th ST, MIAMI, FL 33175
PH: (305) 505-6910
email: julio@novusarchetype.com
AA26001460
Qualifier: Julio Pulido, AIA
License #: AR93904
Qualifier : Salvador Ben Mirani, NCARB
License # : AR99606

ACO DESIGN LLC.
MECHANICAL, ELECTRICAL & PLUMBING ENGINEERING DESIGN
PH: (786) 234-7046
E-mail: gorgoy127@hotmail.com
Address: 106 Florida Blvd, Miami FL 33144
Qualifier: Ernesto Rodriguez P.E. # 58155

Dylan & Jamie Roy

Interior Remodeling & Addition

6783 SW 104th St Pinecrest, Fl 33156

No.	Description	Date

Project number	24-011
Date	10-24-2024
Drawn by	O.G.
Checked by	E.R.

ERNESTO RODRIGUEZ LICENSE No. 58155 STATE OF FLORIDA PROFESSIONAL ENGINEER

NOT VALID FOR CONSTRUCTION OR BIDDING WITHOUT SIGNATURE & CITY APPROVAL STAMPS

Digitally signed by Ernesto Rodriguez
Date: 2024.12.20 10:07:48 -05'00'

This item has been digitally signed and sealed by Ernesto Rodriguez P.E. on the date adjacent to the seal. Printed Copies of this document are not considered signed and sealed and the signature must be re verified on any electronic copies

PLANS ARE PROTECTED UNDER THE COPYRIGHT LAWS OF FLORIDA:
CONTRACTOR SHALL VERIFY ALL NEW DIMENSIONS FOR ALL CONDITIONS AND CONDITIONS ON THE JOB. THE DESIGN PROFESSIONAL MUST BE NOTIFIED IN WRITING OF ANY VARIATION FROM THESE PLANS. ALL DRAWINGS, SPECIFICATIONS AND ARRANGEMENTS ARE THE PROPERTY OF THE DESIGN PROFESSIONAL AND WERE CREATED EVOLVED AND DEVELOPED FOR USE ON AND IN CONNECTION WITH THE SPECIFIED PROJECT. NONE OF THESE PLANS MAY BE USED WITHOUT THE WRITTEN APPROVAL OF THE DESIGN PROFESSIONAL OR AND CONSTRUCTION EXECUTED FROM THESE PLANS WITHOUT EXPRESSED APPROVAL OF ACO DESIGN SHALL AUTOMATICALLY ENTITLE THE DESIGN PROFESSIONAL TO REMUNERATION FOR ALL SERVICES RENDERED, LOSS OR LITIGATION FEES AND HEREBY ASSIGNS OF THE PROJECT OWNER. OWNER OF THESE PLANS SHALL BE COPIED OR REPRODUCED BY ANY MEANS OR USED IN CONNECTION WITH ANY OTHER PROJECT WHATSOEVER WITHOUT THE WRITTEN WORK BEEN OBTAINED WITHOUT WRITTEN CONSENT OF THE DESIGN PROFESSIONAL.

SHEET TITLE

GAS PLUMBING FLOOR PLAN

SHEET No.

P400

Miami Dade County Department of Regulatory and Economic Resources - Job Copy
2025008506 - 5/19/2025 11:05:46 AM
P400.pdf

MIAMI-DADE COUNTY
PRODUCT CONTROL SECTION
11805 SW 26 Street, Room 208
Miami, Florida 33175-2474
T (786) 315-2590 F (786) 315-2599
www.miamidade.gov/economy

DEPARTMENT OF REGULATORY AND ECONOMIC RESOURCES (RER)
BOARD AND CODE ADMINISTRATION DIVISION

NOTICE OF ACCEPTANCE (NOA)

Rheem Sales Company, Inc.
5600 Old Greenwood Rd.
Fort Smith, AR 72917

SCOPE:

This NOA is being issued under the applicable rules and regulations governing the use of construction materials. The documentation submitted has been reviewed and accepted by Miami-Dade County RER-Product Control Section to be used in Miami-Dade County and other areas where allowed by the Authority Having Jurisdiction (AHJ).

This NOA shall not be valid after the expiration date stated below. The Miami-Dade County Product Control Section (In Miami-Dade County) and/ or the AHJ (in areas other than Miami-Dade County) reserve the right to have this product or material tested for quality assurance purposes. If this product or material fails to perform in the accepted manner, the manufacturer will incur the expense of such testing and the AHJ may immediately revoke, modify, or suspend the use of such product or material within their jurisdiction. RER reserves the right to revoke this acceptance if it is determined by Miami-Dade County Product Control Section that this product or material fails to meet the requirements of the applicable building code.

This product is approved as described herein and has been designed to comply with the Florida Building Code, including the High Velocity Hurricane Zone.

DESCRIPTION: Mechanical Unit Steel and Aluminum Tie-Down Clips for Grade and Rooftop Applications

APPROVAL DOCUMENT: Drawing No. **20-28800**, titled "Wind Load Certification of Mechanical Unit Cabinetry and Steel/ Aluminum Tie-Down Clips: At Grade and Roof Mounted Applications", sheets 1 through 7 of 7, dated 05/14/2015, revised on 03/10/2023, prepared by Engineering Express, signed and sealed by Frank L. Bennardo, P.E., bearing the Miami-Dade County Product Control revision stamp with the Notice of Acceptance number and expiration date by the Miami-Dade County Product Control Section.

MISSILE IMPACT RATING: None

LABELING: Each unit shall bear a permanent label with the manufacturer's name or logo, city, state, model/ series, and following statement: "Miami-Dade County Product Control Approved", unless otherwise noted herein.

RENEWAL of this NOA shall be considered after a renewal application has been filed and there has been no change in the applicable building code negatively affecting the performance of this product.

TERMINATION of this NOA will occur after the expiration date or if there has been a revision or change in the materials, use, and/ or manufacture of the product or process. Misuse of this NOA as an endorsement of any product, for sales, advertising or any other purposes shall automatically terminate this NOA. Failure to comply with any section of this NOA shall be cause for termination and removal of NOA.

ADVERTISEMENT: The NOA number preceded by the words Miami-Dade County, Florida, and followed by the expiration date may be displayed in advertising literature. If any portion of the NOA is displayed, then it shall be done in its entirety.

INSPECTION: A copy of this entire NOA shall be provided to the user by the manufacturer or its distributors and shall be available for inspection at the job site at the request of the Building Official.

This NOA **revises NOA # 20-1102.09** and consists of this page 1 and evidence pages E-1, E-2, E-3 and E-4, as well as approval document mentioned above.

The submitted documentation was reviewed by **Carlos M. Utrera, P.E.**

MIAMI-DADE COUNTY APPROVED

NOA No. 23-0328.04
Expiration Date: February 25, 2026
Approval Date: April 27, 2023

Miami Dade County Department of Regulatory and Economic Resources - Job Copy
2025008506 - 5/19/2025 11:05:46 AM
RHEEM AC NOA.pdf

Rheem Sales Company, Inc.

NOTICE OF ACCEPTANCE: EVIDENCE SUBMITTED

1. Evidence submitted under previous NOAs

A. DRAWINGS *"Submitted under NOA # 15-0903.08"*

1. Drawing No. **15-2543GA** and **15-2564RE**, titled "Wind Load Certification of Mechanical Unit Cabinetry and Steel/Aluminum Tie-Down Clips: At Grade and Roof Mounted Applications", sheets 1 through 7 of 7, dated 05/14/2015, revised on 11/20/2015, prepared by Engineering Express, signed and sealed by Frank L. Bennardo, P.E.

B. TESTS *"Submitted under NOA # 15-0903.08"*

1. Test report on Uniform Static Air Pressure Test per FBC, TAS 202-94 along with marked-up drawings and installation diagram of Rheem RA Series Mechanical Units, prepared by American Test Lab of South Florida, Test Report No. **0323.01-15**, dated 05/18/2015, signed and sealed by Stephen W. Warter, P.E.

C. CALCULATIONS *"Submitted under NOA # 15-0903.08"*

1. Anchorage calculations prepared by Engineering Express, dated 11/20/2015, signed and sealed by Frank L. Bennardo, P.E.

D. QUALITY ASSURANCE

1. Miami-Dade Department of Regulatory and Economic Resources (RER)

E. MATERIAL CERTIFICATIONS

1. None.

F. STATEMENT *"Submitted under NOA # 15-0903.08"*

1. Statement letter of code conformance to the 5th edition (2014) FBC issued by Engineering Express, dated 08/24/2015, signed and sealed by Frank L. Bennardo, P.E.

2. Statement letter of no financial interest issued by Engineering Express, dated 11/20/2015, signed and sealed by Frank L. Bennardo, P.E.

3. Distributor agreement dated 11/12/2015.

Carlos M. Utrera, P.E.
Product Control Examiner
NOA No. 23-0328.04
Expiration Date: February 25, 2026
Approval Date: April 27, 2023

Miami Dade County Department of Regulatory and Economic Resources - Job Copy
2025008506 - 5/19/2025 11:05:46 AM
RHEEM AC NOA.pdf

NOTICE OF ACCEPTANCE: EVIDENCE SUBMITTED

2. Evidence submitted under NOA # 18-0321.11

A. DRAWINGS

1. Drawing No. **15-2543GA** and **15-2564RE**, titled "Wind Load Certification of Mechanical Unit Cabinetry and Steel/Aluminum Tie-Down Clips: At Grade and Roof Mounted Applications", sheets 1 through 7 of 7, dated 05/14/2015, revised on 01/12/2018, prepared by Engineering Express, signed and sealed by Frank L. Bennardo, P.E.

B. TESTS

1. None.

C. CALCULATIONS

1. None.

D. QUALITY ASSURANCE

1. Miami-Dade Department of Regulatory and Economic Resources (RER)

E. MATERIAL CERTIFICATIONS

1. None.

F. STATEMENTS

1. Statement letter of code conformance to the 6th Edition (2017) FBC issued by Engineering Express, dated 03/19/2018, signed and sealed by Frank L. Bennardo, P.E.

Carlos M. Utrera, P.E.
Product Control Examiner
NOA No. 23-0328.04
Expiration Date: February 25, 2026
Approval Date: April 27, 2023

Miami Dade County Department of Regulatory and Economic Resources - Job Copy
2025008506 - 5/19/2025 11:05:46 AM
RHEEM AC NOA.pdf

NOTICE OF ACCEPTANCE: EVIDENCE SUBMITTED

3. Evidence submitted under NOA # 18-0719.07

A. DRAWINGS

1. Drawing No. Drawing No. **15-2543GA** through **15-2543GD** and **15-2564RE**, titled "Wind Load Certification of Mechanical Unit Cabinetry and Steel/ Aluminum Tie-Down Clips: At Grade and Roof Mounted Applications", sheets 1 through 7 of 7, dated 05/14/2015, revised on 01/12/2018, prepared by Engineering Express, signed and sealed by Frank L. Bennardo, P.E. on 07/17/2018.

B. TESTS

1. None.

C. CALCULATIONS

1. None.

D. QUALITY ASSURANCE

1. Miami-Dade Department of Regulatory and Economic Resources (RER)

E. MATERIAL CERTIFICATIONS

1. None.

F. STATEMENTS

2. Models removal request, dated 07/17/2018, signed and sealed by Frank L. Bennardo, P.E.

Carlos M. Utrera, P.E.
Product Control Examiner
NOA No. 23-0328.04
Expiration Date: February 25, 2026
Approval Date: April 27, 2023

Miami Dade County Department of Regulatory and Economic Resources - Job Copy
2025008506 - 5/19/2025 11:05:46 AM
RHEEM AC NOA.pdf

NOTICE OF ACCEPTANCE: EVIDENCE SUBMITTED

4. Evidence submitted under NOA # 20-1102.09 and new

A. DRAWINGS

1. Drawing No. **20-28800**, titled "Wind Load Certification of Mechanical Unit Cabinetry and Steel/ Aluminum Tie-Down Clips: At Grade and Roof Mounted Applications", sheets 1 through 7 of 7, dated 05/14/2015, revised on 03/10/2023, prepared by Engineering Express, signed and sealed by Frank L. Bennardo, P.E.

B. TESTS

1. None.

C. CALCULATIONS

1. None.

D. QUALITY ASSURANCE

1. Miami-Dade Department of Regulatory and Economic Resources (RER)

E. MATERIAL CERTIFICATIONS

1. None.

F. STATEMENTS

1. Statement letter of code conformance to the 7th edition (2020) FBC issued by Engineering Express, dated 10/19/2020, signed and sealed by Frank L. Bennardo, P.E.

2. Statement letter of no financial interest issued by Engineering Express, dated 10/19/2020, signed and sealed by Frank L. Bennardo, P.E.

Carlos M. Utrera, P.E.
Product Control Examiner
NOA No. 23-0328.04
Expiration Date: February 25, 2026
Approval Date: April 27, 2023

Miami Dade County Department of Regulatory and Economic Resources - Job Copy
2025008506 - 5/19/2025 11:05:46 AM
RHEEM AC NOA.pdf

RHEEM SALES COMPANY, INC.

WIND LOAD CERTIFICATION OF MECHANICAL UNIT CABINETRY AND STEEL/ALUMINUM TIE-DOWN CLIPS: AT GRADE MOUNTED APPLICATIONS

NON-SITE-SPECIFIC STRUCTURAL PERFORMANCE EVALUATION. A DESIGN PROFESSIONAL SHALL BE RESPONSIBLE FOR CERTIFYING THE APPLICATION OF THIS INFORMATION TO ANY SITE-SPECIFIC LOCATION.

FRANK BENNARDO, P.E.
PE# 0046549 CA# 9885

MARCH 16, 2023

FRANK BENNARDO LICENSE No PE0046549 STATE OF FLORIDA PROFESSIONAL ENGINEER FL

APPROVED DESIGN CRITERIA:

ASCE 7 Vult=175 MPH (Vasd-136 MPH), EXPOSURE 'D', AT GRADE INSTALLATION ONLY

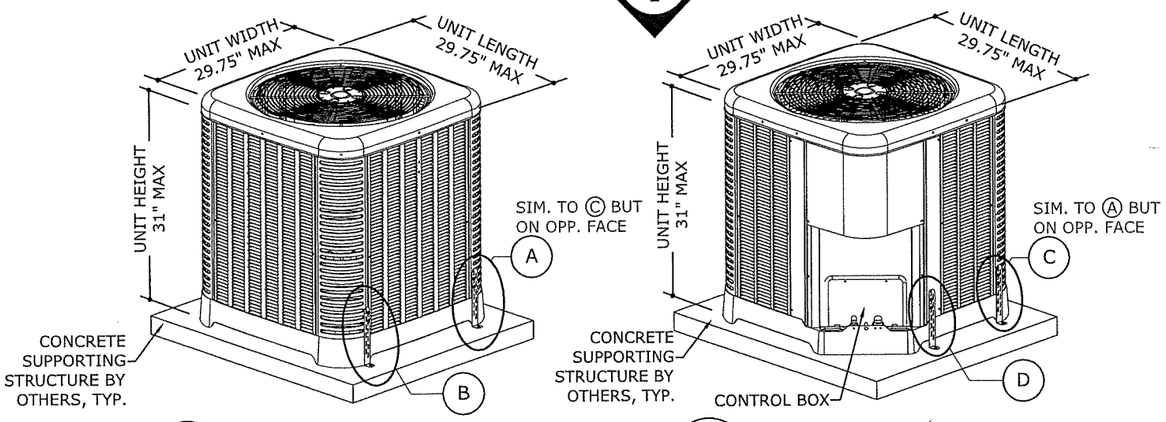

1/1 MECHANICAL UNIT — NOT TO SCALE — FRONT ISOMETRIC

2/1 MECHANICAL UNIT — NOT TO SCALE — BACK ISOMETRIC

THESE ISOMETRICS ARE INTENDED FOR DIAGRAMMATICAL PURPOSES ONLY; ALTERNATE RHEEM UNITS MAY VARY IN APPEARANCE

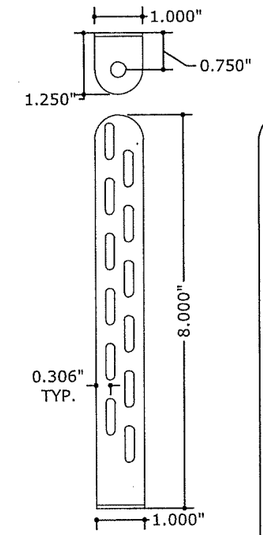

TIE-DOWN BRACKET

MIAMI TECH CLIP: 14GA (0.07") ASTM A653 Fu=90 KSI STEEL (CUTD8) OR 0.080" 5052-H32 ALUMINUM (CUTDA8), MIAMI TECH KIT # RRCUTDSMK OR RRCUTDASMK

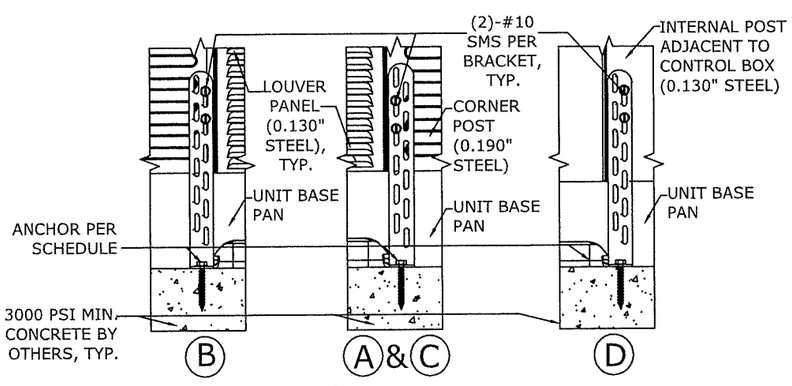

3/1 TIE-DOWN BRACKETS — NOT TO SCALE — ELEVATION

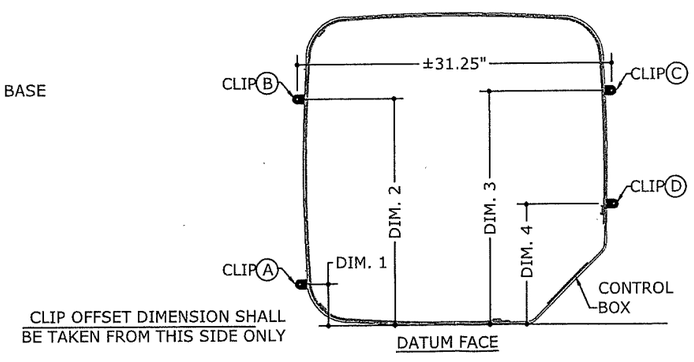

4/1 TIE-DOWN BRACKET LAYOUT — NOT TO SCALE — PLAN

DESIGN NOTES:

THIS SYSTEM HAS BEEN DESIGNED IN ACCORDANCE WITH ASCE 7 AND THE FLORIDA BUILDING CODE SEVENTH EDITION (2020) FOR USE WITHIN AND OUTSIDE THE HIGH VELOCITY HURRICANE ZONE. THE DESIGN CRITERIA CONSIDERS ASCE 7 SECTION 29 FOR "OTHER STRUCTURES - SOLID FREESTANDING WALLS" INSTALLATIONS AT GRADE. ALL DESIGN VARIABLES ARE IN ACCORDANCE WITH ASCE 7 CHAPTERS 26 & 29.

GENERAL NOTES:

1. THIS SYSTEM HAS BEEN DESIGNED AND SHALL BE FABRICATED IN ACCORDANCE WITH THE REQUIREMENTS OF THE FLORIDA BUILDING CODE SEVENTH EDITION (2020) & ASCE 7. THIS SYSTEM MAY BE USED WITHIN AND OUTSIDE THE HIGH VELOCITY HURRICANE ZONE. THIS DESIGN IS NOT INTENDED TO CERTIFY IMPACT RESISTANCE OF THE MECHANICAL UNIT CABINETRY.
2. NO 33-1/3% INCREASE IN ALLOWABLE STRESS HAS BEEN USED IN THE DESIGN OF THIS SYSTEM.
3. DESIGN & CERTIFICATION OF THE UNIT CABINETRY IS APPROVED THROUGH TEST REPORT#0323.01-15 BY AMERICAN TEST LAB OF SOUTH FLORIDA.
4. **ALL MODELS WITH THE MAXIMUM DIMENSIONS, MINIMUM WEIGHT (120 LB MINIMUM), AND MINIMUM MATERIAL STRENGTH, THICKNESS, AND FASTENERS SHOWN HEREIN ARE COVERED UNDER THIS NOA.** MODELS SHALL CONFORM TO THE LIMITATIONS STATED HEREIN. ALL MECHANICAL SPECIFICATIONS (CLEAR SPACE, TONNAGE, ETC.) SHALL BE AS PER MANUFACTURER RECOMMENDATIONS AND ARE THE EXPRESS RESPONSIBILITY OF THE CONTRACTOR.
5. TAPCONS REFERRED TO HEREIN SHALL BE ITW BUILDEX BRAND, ASTM F593 410 STAINLESS STEEL OR EQUIVALENT ONLY, INSTALLED TO 3000 PSI MIN CONCRETE. SEE ANCHOR SCHEDULE FOR ANCHOR REQUIREMENTS. ALL SHEET METAL SCREWS USED TO FASTEN BRACKETS TO MECHANICAL UNITS SHALL BE #10 (14 MIN THREADS PER INCH) ASTM F593 410 STAINLESS STEEL OR EQUIVALENT ONLY. PROVIDE (5) PITCHES MINIMUM PAST THE THREAD PLANE FOR SHEET METAL SCREWS. ALL FASTENERS SHALL HAVE APPROPRIATE CORROSION PROTECTION TO PREVENT ELECTROLYSIS.
6. ALL CONCRETE SPECIFIED HEREIN IS NOT PART OF THIS CERTIFICATION. AS A MINIMUM, ALL CONCRETE SHALL BE STRUCTURAL CONCRETE 4" MIN. THICK AND SHALL HAVE MINIMUM COMPRESSIVE STRENGTH OF 3000 PSI, UNLESS NOTED OTHERWISE.
7. THE CONTRACTOR IS RESPONSIBLE TO INSULATE ALL MEMBERS FROM DISSIMILAR MATERIALS TO PREVENT ELECTROLYSIS.
8. ELECTRICAL GROUND, WHEN REQUIRED, TO BE DESIGNED & INSTALLED BY OTHERS.
9. THE ADEQUACY OF ANY EXISTING STRUCTURE TO WITHSTAND SUPERIMPOSED LOADS SHALL BE VERIFIED BY THE ONSITE DESIGN PROFESSIONAL AND IS NOT INCLUDED IN THIS CERTIFICATION.EXCEPT AS EXPRESSLY PROVIDED HEREIN, NO ADDITIONAL CERTIFICATIONS OR AFFIRMATIONS ARE INTENDED.
10. THE SYSTEM DETAILED HEREIN IS GENERIC AND DOES NOT PROVIDE INFORMATION FOR A SPECIFIC SITE. FOR SITE CONDITIONS DIFFERENT FROM THE CONDITIONS DETAILED HEREIN, A LICENSED ENGINEER OR REGISTERED ARCHITECT SHALL PREPARE SITE SPECIFIC DOCUMENTS FOR USE IN CONJUNCTION WITH THIS DOCUMENT.
11. WATER-TIGHTNESS OF EXISTING HOST SUBSTRATE SHALL BE THE FULL RESPONSIBILITY OF THE INSTALLING CONTRACTOR. CONTRACTOR SHALL ENSURE THAT ANY REMOVED OR ALTERED WATERPROOFING MEMBRANE IS RESTORED AFTER FABRICATION AND INSTALLATION OF STRUCTURE PROPOSED HEREIN. THIS ENGINEER SHALL NOT BE RESPONSIBLE FOR ANY WATERPROOFING OR LEAKAGE ISSUES WHICH MAY OCCUR AS WATER-TIGHTNESS SHALL BE THE FULL RESPONSIBILITY OF THE INSTALLING CONTRACTOR.
12. FOR AN EXPLANATION OF EXPOSURE CATEGORIES THAT ACCOMPANY THE Vult WIND SPEEDS USED IN THIS DOCUMENT, SEE SECTION 26.7 OF ASCE 7

ANCHOR SCHEDULE:

SUBSTRATE	DESCRIPTION
CONCRETE: (4" THICK MIN, 3000 PSI MIN.)	(1)-1/4"Ø STAINLESS STEEL ITW BUILDEX TAPCON, 1¾" FULL EMBED TO CONCRETE, 2½" MIN. EDGE DISTANCE, 3" MIN. SPACING TO ANY ADJACENT ANCHOR.

TIE-DOWN BRACKET OFFSETS:

DIM. 1	4.50" MAX OFFSET FROM DATUM FACE
DIM. 2	24.50" MIN OFFSET FROM DATUM FACE
DIM. 3	25.25" MIN OFFSET FROM DATUM FACE
DIM. 4	13" MAX OFFSET FROM DATUM FACE

PRODUCT REVISED
as complying with the Florida Building Code
NOA-No. 23-0328.04
Expiration Date 02/25/2026
By
Miami-Dade Product Control

ENGINEERING EXPRESS®
POSTAL ADDRESS:
401 W. ATLANTIC AVE R10 BOX 219
DELRAY BEACH, FL 33444
ENGINEERINGEXPRESS.COM

RHEEM SALES COMPANY
5600 OLD GREENWOOD RD
FORT SMITH, AR 72917
(770) 351-3000

MECHANICAL UNIT STEEL AND ALUMINUM TIE-DOWN CLIPS FOR GRADE AND ROOFTOP APPLICATIONS
FBC 7TH EDITION. (2020) | MIAMI-DADE COUNTY NOA

REMARKS	DRWN	CHKD	DATE
INIT ISSUE	JAC	TSB	05/14/15
2017 FBC UPDATE	LAO	FLB	01/12/18
2020 FBC	CCB	RWN	10/19/20
ADD MODEL NOTE	EPR	RWN	03/10/23

COPYRIGHT ENGINEERING EXPRESS®

20-28800GA

SCALE: NTS UNLESS NOTED

1 OF 7

c:\users\eric\engineering express\production - documents\projects\20-\20-28800 - noa 18-0719.07- wind load cert of mechanical unit\wp\2020 fbc\20-28800f - noa dwg.dwg
ERIC
23 4:00 PM
Miami Dade County Department of Regulatory and Economic Resources - Job Copy
2025008506 - 5/19/2025 11:05:46 AM
RHEEM AC NOA.pdf

RHEEM SALES COMPANY, INC.

WIND LOAD CERTIFICATION OF MECHANICAL UNIT CABINETRY AND STEEL/ALUMINUM TIE-DOWN CLIPS: AT GRADE MOUNTED APPLICATIONS

FRANK BENNARDO, P.E.
PE# 0046549 CA# 9885

MARCH 16, 2023

No PE0046549 FL STATE OF FLORIDA PROFESSIONAL ENGINEER

PRODUCT REVISED
as complying with the Florida Building Code
NOA-No. 23-0328.04
Expiration Date 02/25/2026
By
Miami-Dade Product Control

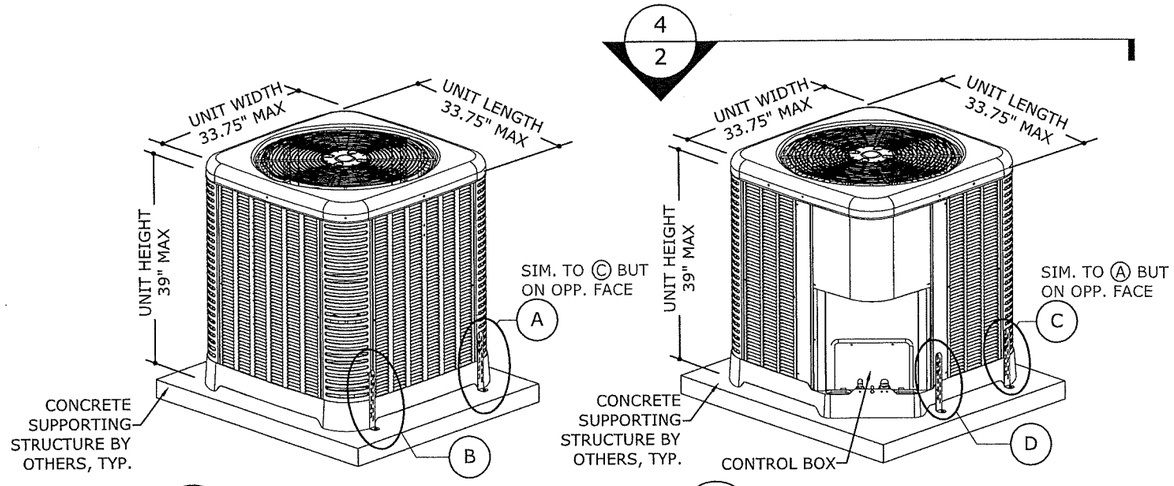

1/2 MECHANICAL UNIT — NOT TO SCALE — FRONT ISOMETRIC

2/2 MECHANICAL UNIT — NOT TO SCALE — BACK ISOMETRIC

THESE ISOMETRICS ARE INTENDED FOR DIAGRAMMATICAL PURPOSES ONLY; ALTERNATE RHEEM UNITS MAY VARY IN APPEARANCE

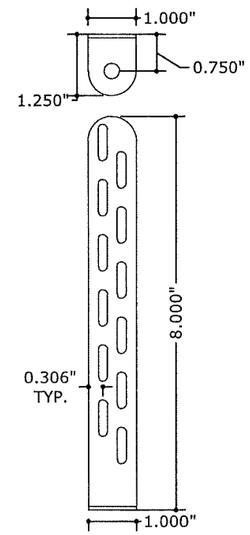

TIE-DOWN BRACKET

MIAMI TECH CLIP: 14GA (0.07") ASTM A653 Fu=90 KSI STEEL (CUTD8) OR 0.080" 5052-H32 ALUMINUM (CUTDA8), MIAMI TECH KIT # RRCUTDSMK OR RRCUTDASMK

(2)-#10 SMS PER BRACKET FOR UNITS UP TO 35" TALL. (3)-#10 SMS PER BRACKET FOR UNITS UP TO 39" TALL (ONLY (2) SMS SHOWN BELOW)

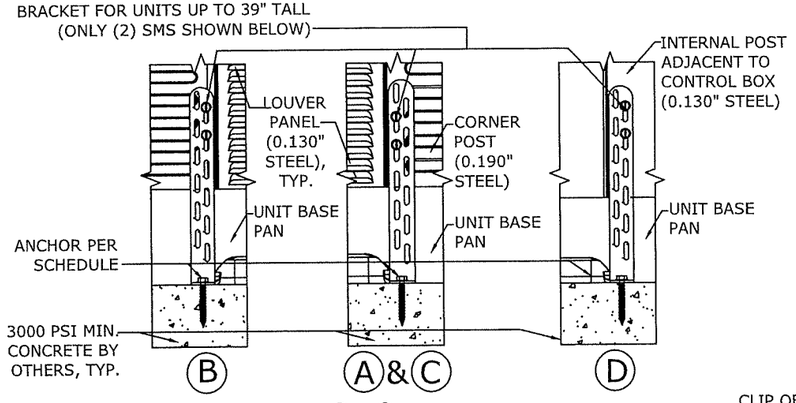

Ⓐ & Ⓒ ARE SIM AND OCCUR ON OPP. FACES

3/2 TIE-DOWN BRACKETS — NOT TO SCALE — ELEVATION

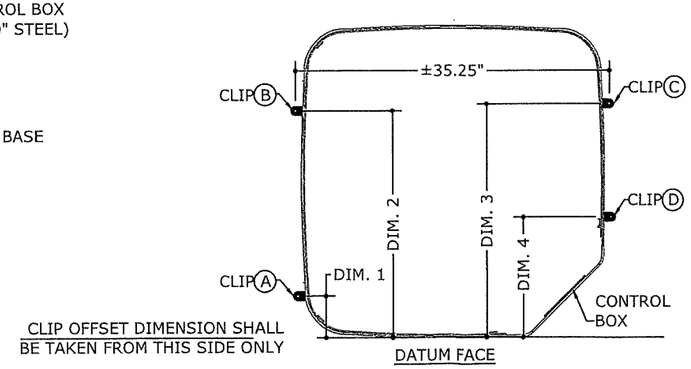

CLIP OFFSET DIMENSION SHALL BE TAKEN FROM THIS SIDE ONLY

4/2 TIE-DOWN BRACKET LAYOUT — NOT TO SCALE — PLAN

ANCHOR SCHEDULE:

SUBSTRATE	DESCRIPTION
CONCRETE: (4" THICK MIN, 3000 PSI MIN.)	(1)-1/4"Ø STAINLESS STEEL ITW BUILDEX TAPCON, 1¾" FULL EMBED TO CONCRETE, 2½" MIN. EDGE DISTANCE, 3" MIN. SPACING TO ANY ADJACENT ANCHOR.

TIE-DOWN BRACKET OFFSETS:

DIM. 1	4.50" MAX OFFSET FROM DATUM FACE
DIM. 2	28.00" MIN OFFSET FROM DATUM FACE
DIM. 3	29.00" MIN OFFSET FROM DATUM FACE
DIM. 4	13.00" MAX OFFSET FROM DATUM FACE

ENGINEERING EXPRESS®
POSTAL ADDRESS:
401 W. ATLANTIC AVE R10 BOX 219
DELRAY BEACH, FL 33444
ENGINEERINGEXPRESS.COM

RHEEM SALES COMPANY
5600 OLD GREENWOOD RD
FORT SMITH, AR 72917
(770) 351-3000

MECHANICAL UNIT STEEL AND ALUMINUM TIE-DOWN CLIPS FOR GRADE AND ROOFTOP APPLICATIONS
FBC 7TH EDITION. (2020) | MIAMI-DADE COUNTY NOA

REMARKS	DRWN	CHKD	DATE
INIT ISSUE	JAC	TSB	05/14/15
2017 FBC UPDATE	LAO	FLB	01/12/18
2020 FBC	CCB	RWN	10/19/20
ADD MODEL NOTE	EPR	RWN	03/10/23
-	-	-	-

COPYRIGHT ENGINEERING EXPRESS®

20-28800GB

SCALE: NTS UNLESS NOTED

2 OF 7

c:\users\eric\engineering express\production - documents\projects\20-\20-28800 - noa 18-0719.07- wind load cert of mechanical unit\wp\2020 fbc\20-28800f - noa dwg.dwg
ERIC
23 4:01 PM

Miami Dade County Department of Regulatory and Economic Resources - Job Copy
2025008506 - 5/19/2025 11:05:46 AM
RHEEM AC NOA.pdf

RHEEM SALES COMPANY, INC.

WIND LOAD CERTIFICATION OF MECHANICAL UNIT CABINETRY AND STEEL/ALUMINUM TIE-DOWN CLIPS: AT GRADE MOUNTED APPLICATIONS

FRANK BENNARDO, P.E.
PE# 0046549 CA# 9885

MARCH 16, 2023

LICENSED PROFESSIONAL ENGINEER No PE0046549 STATE OF FLORIDA FL

PRODUCT REVISED
as complying with the Florida Building Code
NOA-No. 23-0328.04
Expiration Date 02/25/2026
By
Miami-Dade Product Control

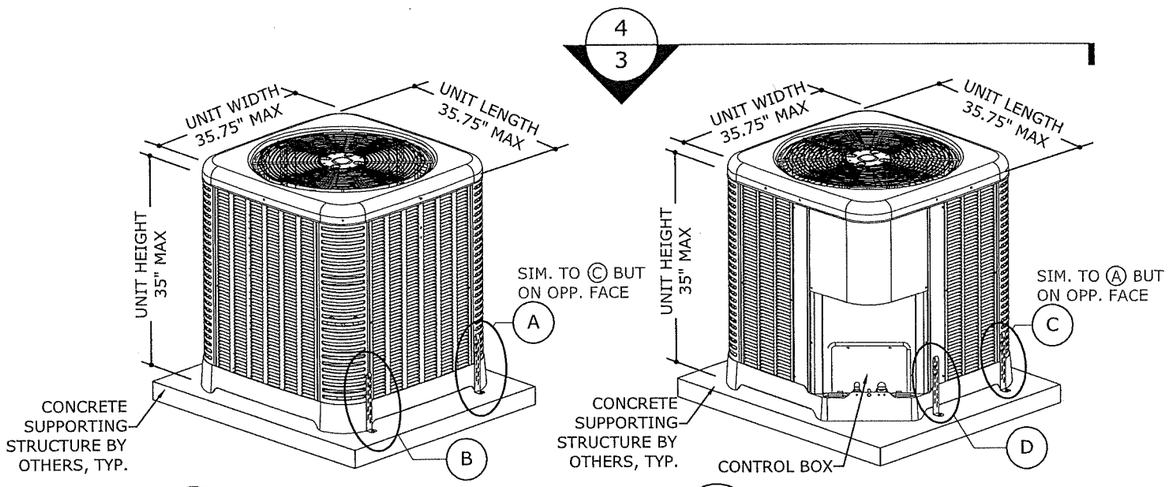

1/3 MECHANICAL UNIT — NOT TO SCALE — FRONT ISOMETRIC

2/3 MECHANICAL UNIT — NOT TO SCALE — BACK ISOMETRIC

THESE ISOMETRICS ARE INTENDED FOR DIAGRAMMATICAL PURPOSES ONLY; ALTERNATE RHEEM UNITS MAY VARY IN APPEARANCE

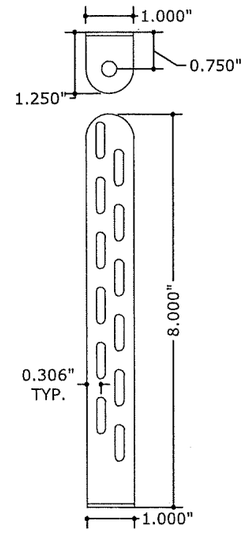

TIE-DOWN BRACKET

MIAMI TECH CLIP: 14GA (0.07") ASTM A653 Fu=90 KSI STEEL (CUTD8) OR 0.080" 5052-H32 ALUMINUM (CUTDA8), MIAMI TECH KIT # RRCUTDSMK OR RRCUTDASMK

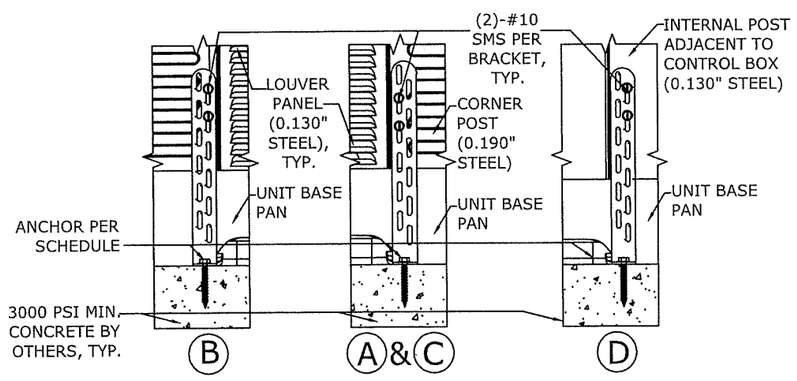

Ⓐ & Ⓒ ARE SIM AND OCCUR ON OPP. FACES

3/3 TIE-DOWN BRACKETS — NOT TO SCALE — ELEVATION

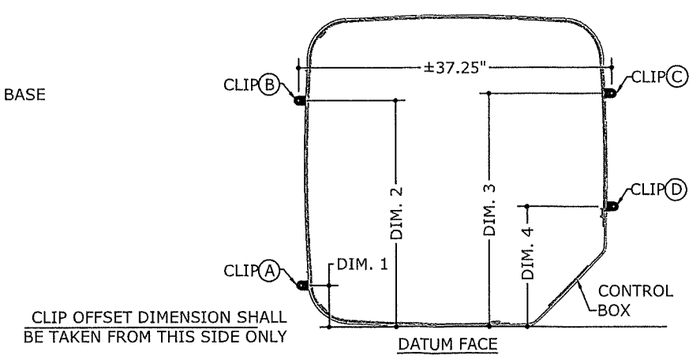

CLIP OFFSET DIMENSION SHALL BE TAKEN FROM THIS SIDE ONLY

4/3 TIE-DOWN BRACKET LAYOUT — NOT TO SCALE — PLAN

ANCHOR SCHEDULE:

SUBSTRATE	DESCRIPTION
CONCRETE: (4" THICK MIN, 3000 PSI MIN.)	(1)-1/4"Ø STAINLESS STEEL ITW BUILDEX TAPCON, 1¾" FULL EMBED TO CONCRETE, 2½" MIN. EDGE DISTANCE, 3" MIN. SPACING TO ANY ADJACENT ANCHOR.

TIE-DOWN BRACKET OFFSETS:

DIM. 1	4.50" MAX OFFSET FROM DATUM FACE
DIM. 2	30.00" MIN OFFSET FROM DATUM FACE
DIM. 3	31.00" MIN OFFSET FROM DATUM FACE
DIM. 4	13.00" MAX OFFSET FROM DATUM FACE

ENGINEERING EXPRESS®
POSTAL ADDRESS:
401 W. ATLANTIC AVE R10 BOX 219
DELRAY BEACH, FL 33444
ENGINEERINGEXPRESS.COM

RHEEM SALES COMPANY
5600 OLD GREENWOOD RD
FORT SMITH, AR 72917
(770) 351-3000

MECHANICAL UNIT STEEL AND ALUMINUM TIE-DOWN CLIPS FOR GRADE AND ROOFTOP APPLICATIONS
FBC 7TH EDITION. (2020) | MIAMI-DADE COUNTY NOA

REMARKS	DRWN	CHKD	DATE
INIT ISSUE	JAC	TSB	05/14/15
2017 FBC UPDATE	LAO	FLB	01/12/18
2020 FBC	CCB	RWN	10/19/20
ADD MODEL NOTE	EPR	RWN	03/10/23

COPYRIGHT ENGINEERING EXPRESS®

20-28800GC

SCALE: NTS UNLESS NOTED

3 OF 7

Miami Dade County Department of Regulatory and Economic Resources - Job Copy
2025008506 - 5/19/2025 11:05:46 AM
RHEEM AC NOA.pdf

c:\users\eric\engineering express\production - documents\projects\20-\20-28800 - noa 18-0719.07- wind load cert of mechanical unit\wp\2020 fbc\20-28800f - noa dwg.dwg
Mar 16, 2023 4:01 PM ERIC

RHEEM SALES COMPANY, INC.

WIND LOAD CERTIFICATION OF MECHANICAL UNIT CABINETRY AND STEEL/ALUMINUM TIE-DOWN CLIPS: AT GRADE MOUNTED APPLICATIONS

FRANK BENNARDO, P.E.
PE# 0046549 CA# 9885

MARCH 16, 2023

FRANK L. BENNARDO LICENSE PE0046549 STATE OF FLORIDA PROFESSIONAL ENGINEER

PRODUCT REVISED
as complying with the Florida Building Code
NOA-No. 23-0328.04
Expiration Date 02/25/2026
By
Miami-Dade Product Control

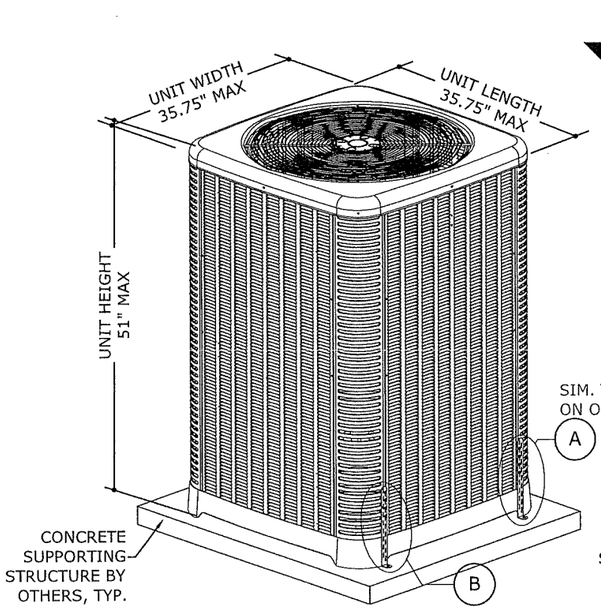

1/4 MECHANICAL UNIT
NOT TO SCALE FRONT ISOMETRIC

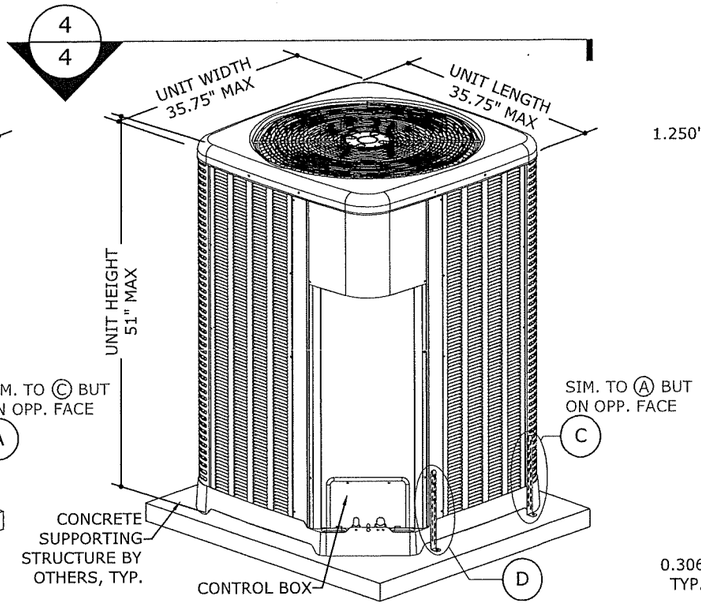

2/4 MECHANICAL UNIT
NOT TO SCALE BACK ISOMETRIC

THESE ISOMETRICS ARE INTENDED FOR DIAGRAMMATICAL PURPOSES ONLY; ALTERNATE RHEEM UNITS MAY VARY IN APPEARANCE

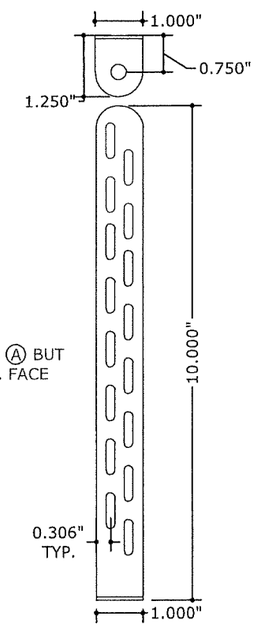

TIE-DOWN BRACKET

MIAMI TECH CLIP: 14GA (0.07") ASTM A653 Fu=90 KSI STEEL (CUTD10) OR 0.080" 5052-H32 ALUMINUM (CUTDA10), MIAMI TECH KIT # RRCUTDLK OR RRCUTDALK

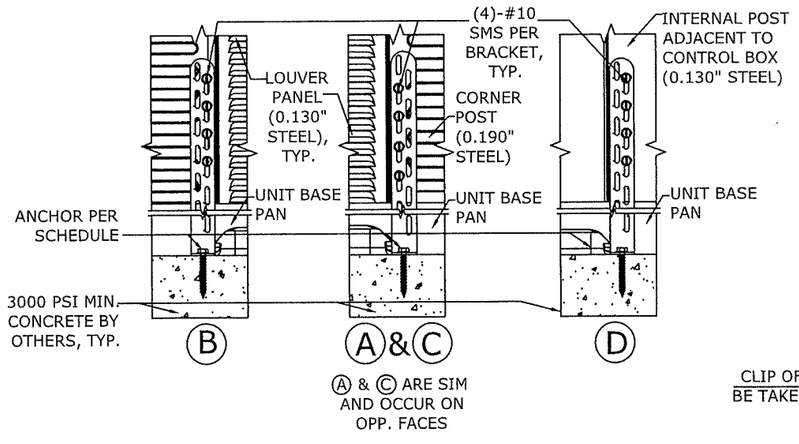

3/4 TIE-DOWN BRACKETS
NOT TO SCALE ELEVATION

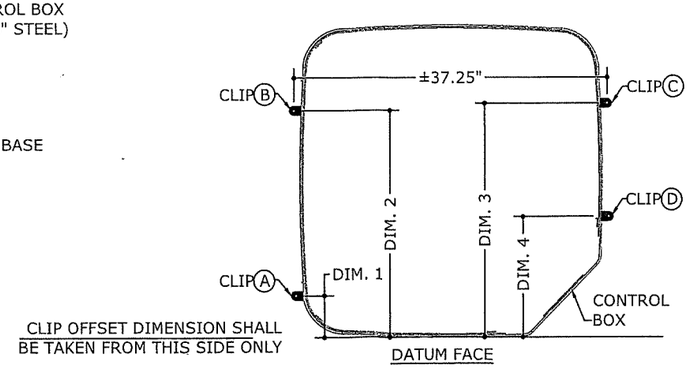

4/4 TIE-DOWN BRACKET LAYOUT
NOT TO SCALE PLAN

ANCHOR SCHEDULE:

SUBSTRATE	DESCRIPTION
CONCRETE: (4" THICK MIN, 3000 PSI MIN.)	(1)-1/4"Ø CARBON STEEL SIMPSON STRONG BOLT 2, 1¾" MIN EMBED TO CONCRETE, 3" MIN. EDGE DISTANCE, 3" MIN. SPACING TO ANY ADJACENT ANCHOR.
	(1)-1/4"Ø CARBON STEEL DEWALT WEDGE BOLT+, 2⅛" MIN EMBED TO CONCRETE, 3" MIN. EDGE DISTANCE, 3" MIN. SPACING TO ANY ADJACENT ANCHOR.

SUPPORTING CONCRETE SUBSTRATE DEPTH SHALL BE A MINIMUM 1.5xANCHOR EMBED.
EITHER ANCHOR FROM THIS SCHEDULE MAY BE USED FOR INSTALLATION.

TIE-DOWN BRACKET OFFSETS:

DIM. 1	4.50" MAX OFFSET FROM DATUM FACE
DIM. 2	30.00" MIN OFFSET FROM DATUM FACE
DIM. 3	31.00" MIN OFFSET FROM DATUM FACE
DIM. 4	13.00" MAX OFFSET FROM DATUM FACE

ENGINEERING EXPRESS®
POSTAL ADDRESS:
401 W. ATLANTIC AVE R10 BOX 219
DELRAY BEACH, FL 33444
ENGINEERINGEXPRESS.COM

RHEEM SALES COMPANY
5600 OLD GREENWOOD RD
FORT SMITH, AR 72917
(770) 351-3000

MECHANICAL UNIT STEEL AND ALUMINUM TIE-DOWN CLIPS FOR GRADE AND ROOFTOP APPLICATIONS
FBC 7TH EDITION, (2020) | MIAMI-DADE COUNTY NOA

REMARKS	DRWN	CHKD	DATE
INIT ISSUE	JAC	TSB	05/14/15
2017 FBC UPDATE	LAO	FLB	01/12/18
2020 FBC	CCB	RWN	10/19/20
ADD MODEL NOTE	EPR	RWN	03/10/23

COPYRIGHT ENGINEERING EXPRESS®

20-28800GD

SCALE: NTS UNLESS NOTED

4 OF 7

Miami Dade County Department of Regulatory and Economic Resources - Job Copy
2025008506 - 5/19/2025 11:05:46 AM
RHEEM AC NOA.pdf

c:\users\eric\engineering express\production - documents\projects\20-\20-28800 - noa 18-0719.07- wind load cert of mechanical unit\wp\2020 fbc\20-28800f - noa dwg.dwg
ERIC
3/10/23 4:01 PM

RHEEM SALES COMPANY, INC.

WIND LOAD CERTIFICATION OF MECHANICAL UNIT CABINETRY AND STEEL TIE-DOWN CLIPS: ROOF MOUNTED APPLICATIONS

NON-SITE-SPECIFIC STRUCTURAL PERFORMANCE EVALUATION. A DESIGN PROFESSIONAL SHALL BE RESPONSIBLE FOR CERTIFYING THE APPLICATION OF THIS INFORMATION TO ANY SITE-SPECIFIC LOCATION.

FRANK BENNARDO, P.E.
PE# 0046549 CA# 9885

MARCH 16, 2023

FRANK L. BENNARDO LICENSE No PE0046549 STATE OF FLORIDA PROFESSIONAL ENGINEER

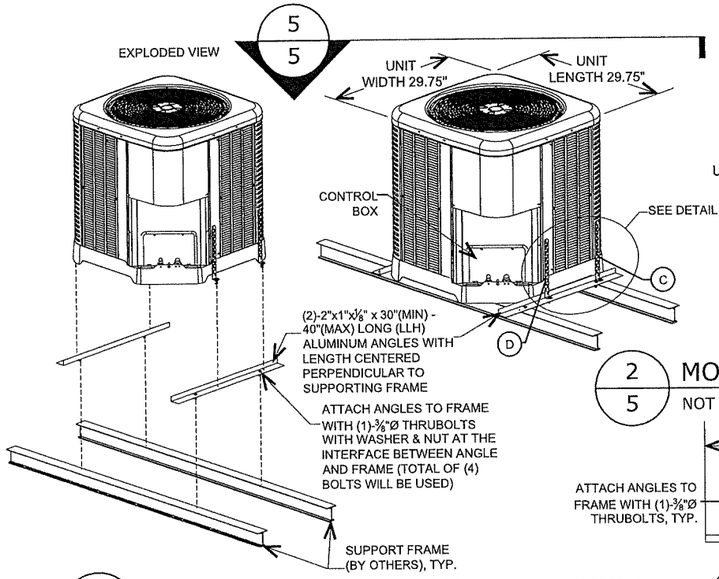

1/5 MOUNT EXPLODED VIEW
NOT TO SCALE — FRONT ISOMETRIC

THESE ISOMETRICS ARE INTENDED FOR DIAGRAMMATICAL PURPOSES ONLY; ALTERNATE RHEEM UNITS LISTED VARY IN APPEARANCE

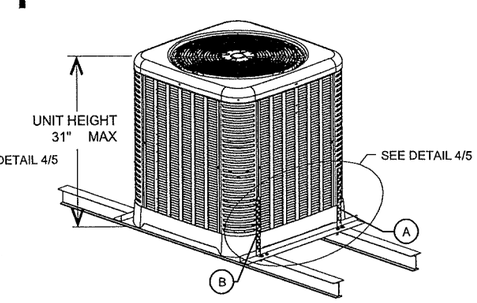

2/5 MOUNT ISOMETRIC VIEW
NOT TO SCALE — FRONT ISO / BACK ISO

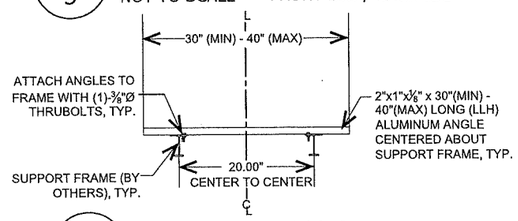

3/5 SUPPORT ANGLE
NOT TO SCALE — ELEVATION

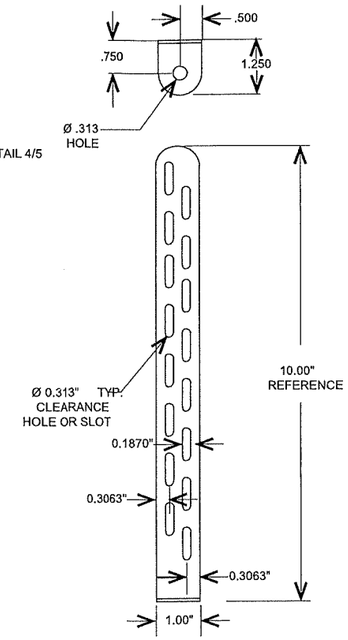

TIE-DOWN CLIP

MIAMI TECH CLIP: 14GA (0.07") ASTM A653 Fu=90 KSI STEEL (CUTD10), MIAMI TECH KIT # RRCUTD30K

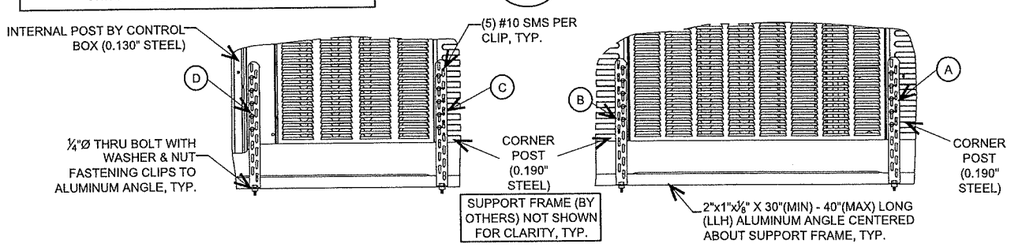

4/5 TIE-DOWN CLIP ATTACHMENTS
NOT TO SCALE — ELEVATIONS

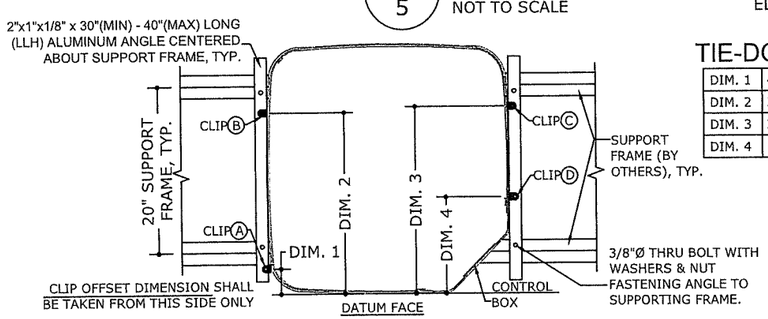

TIE-DOWN CLIP OFFSETS:

DIM. 1	4.50" MAX OFFSET FROM DATUM FACE
DIM. 2	24.50" MIN OFFSET FROM DATUM FACE
DIM. 3	25.25" MIN OFFSET FROM DATUM FACE
DIM. 4	13" MAX OFFSET FROM DATUM FACE

5/5 TIE-DOWN CLIP LAYOUT
NOT TO SCALE — ELEVATIONS

NOTE: UNIT SHALL BE CENTERED ABOUT THE 20" RAIL TO RAIL SUPPORTING FRAME (BY OTHERS)

PRODUCT REVISED
as complying with the Florida Building Code
NOA-No. 23-0328.04
Expiration Date 02/25/2026
By
Miami-Dade Product Control

APPROVED DESIGN CRITERIA:

200 PSF LATERAL WIND LOAD	100 PSF UPLIFT WIND LOAD (CONCURRENT)

DESIGN NOTES:

SITE-SPECIFIC PRESSURE REQUIREMENTS AS DETERMINED IN ACCORDANCE WITH ASCE 7 AND CHAPTER 16 OF THE FLORIDA BUILDING CODE SHALL BE LESS THAN OR EQUAL TO THE DESIGN PRESSURE CAPACITY VALUES LISTED HEREIN FOR ANY ASSEMBLY AS SHOWN. DESIGN PRESSURE REQUIREMENTS SHALL BE DETERMINED BY A REGISTERED DESIGN PROFESSIONAL ON A JOB-SPECIFIC BASIS IN ACCORDANCE WITH THE GOVERNING CODE.

GENERAL NOTES:

1. THIS SYSTEM HAS BEEN DESIGNED AND SHALL BE FABRICATED IN ACCORDANCE WITH THE REQUIREMENTS OF THE FLORIDA BUILDING CODE SEVENTH EDITION (2020). THIS SYSTEM MAY BE USED WITHIN AND OUTSIDE THE HIGH VELOCITY HURRICANE ZONE. THIS DESIGN IS NOT INTENDED TO CERTIFY IMPACT RESISTANCE OF THE MECHANICAL UNIT CABINETRY.
2. NO 33-1/3% INCREASE IN ALLOWABLE STRESS HAS BEEN USED IN THE DESIGN OF THIS SYSTEM.
3. DESIGN & CERTIFICATION OF THE UNIT CABINETRY IS APPROVED THROUGH TEST REPORT#0323.01-15 BY AMERICAN TEST LAB OF SOUTH FLORIDA.
4. **ALL MODELS WITH THE MAXIMUM DIMENSIONS, MINIMUM WEIGHT (120 LB MINIMUM), AND MINIMUM MATERIAL STRENGTH, THICKNESS, AND FASTENERS SHOWN HEREIN ARE COVERED UNDER THIS NOA.** MODELS SHALL CONFORM TO THE LIMITATIONS STATED HEREIN. ALL MECHANICAL SPECIFICATIONS (CLEAR SPACE, TONNAGE, ETC.) SHALL BE AS PER MANUFACTURER RECOMMENDATIONS AND ARE THE EXPRESS RESPONSIBILITY OF THE CONTRACTOR.
5. ALL SHEET METAL SCREWS USED TO FASTEN CLIPS TO MECHANICAL UNITS SHALL BE #10 (14 MIN THREADS PER INCH) GRADE 5 STEEL OR EQUIVALENT ONLY. BOLTS USED TO FASTEN ALUMINUM ANGLES TO SUPPORTING FRAME (BY OTHERS) SHALL BE ASTM F593 410 STAINLESS STEEL OR EQUIVALENT AND SHALL UTILIZE SAE GRADE WASHERS & NUTS. PROVIDE (5) PITCHES MINIMUM PAST THE THREAD PLANE FOR SHEET METAL SCREWS. ALL FASTENERS SHALL HAVE APPROPRIATE CORROSION PROTECTION TO PREVENT ELECTROLYSIS. ALL FASTENER CONNECTIONS TO ALUMINUM SHALL PROVIDE 2xDIAMETER EDGE DISTANCE.
6. ALUMINUM ANGLES SPECIFIED HEREIN SHALL BE 6061-T6 ALUMINUM ONLY.
7. CONNECTIONS TO THE SUPPORTING FRAME (BY OTHERS) CONSIDER A FRAME MEMBER THAT IS 6061-T6 MIN ALUMINUM WITH A MINIMUM 0.094" THICK FLANGE AT ATTACHMENT POINT. PERFORMANCE OF THE RAIL AS A STRUCTURAL MEMBER TO SUPPORT THE UNIT ASSEMBLY SHALL BE PER SEPARATE CERTIFICATION.
8. THE CONTRACTOR IS RESPONSIBLE TO INSULATE ALL MEMBERS FROM DISSIMILAR MATERIALS TO PREVENT ELECTROLYSIS.
9. ELECTRICAL GROUND, WHEN REQUIRED, TO BE DESIGNED & INSTALLED BY OTHERS.
10. THE ADEQUACY OF ANY EXISTING STRUCTURE TO WITHSTAND SUPERIMPOSED LOADS SHALL BE VERIFIED BY THE ONSITE DESIGN PROFESSIONAL AND IS NOT INCLUDED IN THIS CERTIFICATION.EXCEPT AS EXPRESSLY PROVIDED HEREIN, NO ADDITIONAL CERTIFICATIONS OR AFFIRMATIONS ARE INTENDED.
11. THE SYSTEM DETAILED HEREIN IS GENERIC AND DOES NOT PROVIDE INFORMATION FOR A SPECIFIC SITE. FOR SITE CONDITIONS DIFFERENT FROM THE CONDITIONS DETAILED HEREIN, A LICENSED ENGINEER OR REGISTERED ARCHITECT SHALL PREPARE SITE SPECIFIC DOCUMENTS FOR USE IN CONJUNCTION WITH THIS DOCUMENT.
12. WATER-TIGHTNESS OF EXISTING HOST SUBSTRATE SHALL BE THE FULL RESPONSIBILITY OF THE INSTALLING CONTRACTOR. CONTRACTOR SHALL ENSURE THAT ANY REMOVED OR ALTERED WATERPROOFING MEMBRANE IS RESTORED AFTER FABRICATION AND INSTALLATION OF STRUCTURE PROPOSED HEREIN. THIS ENGINEER SHALL NOT BE RESPONSIBLE FOR ANY WATERPROOFING OR LEAKAGE ISSUES WHICH MAY OCCUR AS WATER-TIGHTNESS SHALL BE THE FULL RESPONSIBILITY OF THE INSTALLING CONTRACTOR.

ENGINEERING EXPRESS®
POSTAL ADDRESS:
401 W. ATLANTIC AVE R10 BOX 219
DELRAY BEACH, FL 33444
ENGINEERINGEXPRESS.COM

RHEEM SALES COMPANY
5600 OLD GREENWOOD RD
FORT SMITH, AR 72917
(770) 351-3000

MECHANICAL UNIT STEEL AND ALUMINUM TIE-DOWN CLIPS FOR GRADE AND ROOFTOP APPLICATIONS
FBC 7TH EDITION. (2020) | MIAMI-DADE COUNTY NOA

REMARKS	DRWN	CHKD	DATE
INIT ISSUE	JAC	TSB	05/14/15
2017 FBC UPDATE	LAO	FLB	01/12/18
2020 FBC	CCB	RWN	10/19/20
ADD MODEL NOTE	EPR	RWN	03/10/23

COPYRIGHT ENGINEERING EXPRESS®

20-28800RE

SCALE: NTS UNLESS NOTED

5 OF 7

c:\users\eric\engineering express\production - documents\projects\20-\20-28800 - noa 18-0719.07- wind load cert of mechanical unit\wp\2020 fbc\20-28800f - noa dwg.dwg
ERIC 03/10/2023 4:02 PM
Miami Dade County Department of Regulatory and Economic Resources - Non Copy
2025008506 - 5/19/2025 11:05:46 AM
RHEEM AC NOA.pdf

RHEEM SALES COMPANY, INC.

WIND LOAD CERTIFICATION OF MECHANICAL UNIT CABINETRY AND STEEL TIE-DOWN CLIPS: ROOF MOUNTED APPLICATIONS

FRANK BENNARDO, P.E.
PE# 0046549 CA# 9885

MARCH 16, 2023

FRANK L. BENNARDO JR. LICENSE No PE0046549 STATE OF FLORIDA PROFESSIONAL ENGINEER FL

PRODUCT REVISED
as complying with the Florida Building Code
NOA-No. 23-0328.04
Expiration Date 02/25/2026
By
Miami-Dade Product Control

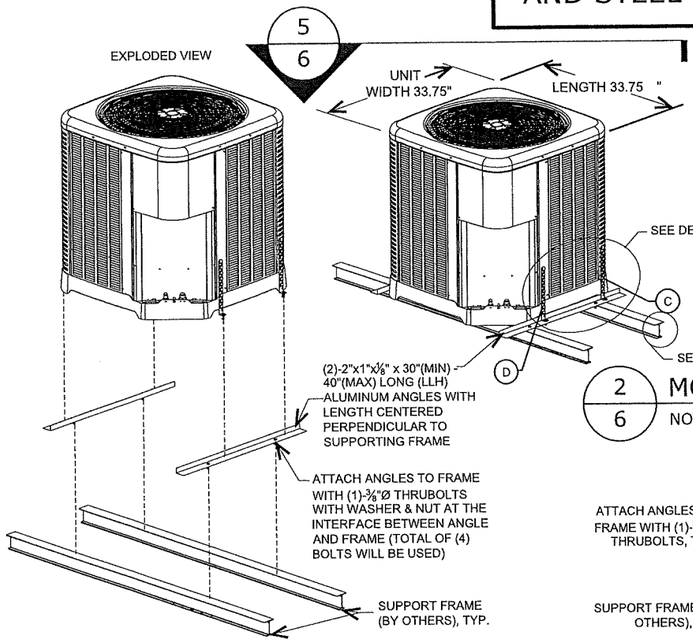

1/6 MOUNT EXPLODED VIEW
NOT TO SCALE — FRONT ISOMETRIC

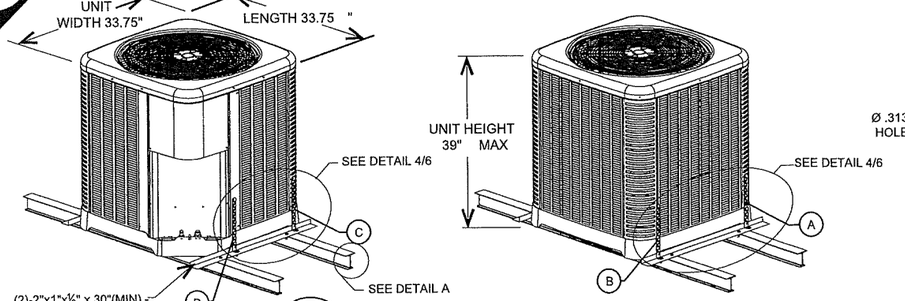

2/6 MOUNT ISOMETRIC VIEW
NOT TO SCALE — FRONT ISO / BACK ISO

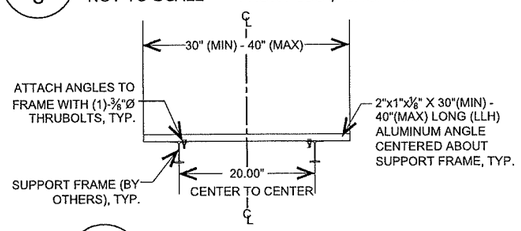

3/6 SUPPORT ANGLE
NOT TO SCALE — ELEVATION

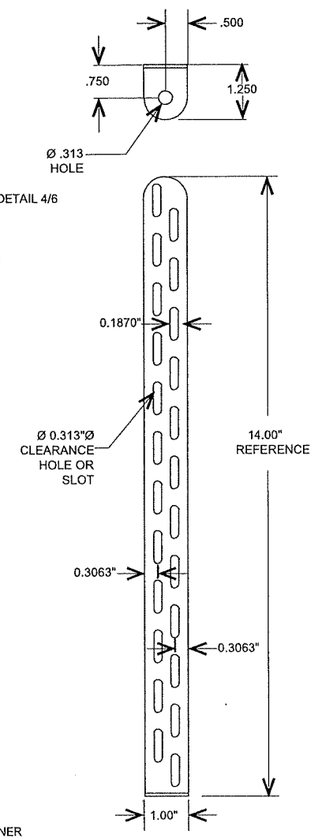

TIE-DOWN CLIP

MIAMI TECH CLIP: 12GA (0.09") ASTM A653 Fu=90 KSI STEEL (CUTD14), MIAMI TECH KIT # RRCUTD34K

THESE ISOMETRICS ARE INTENDED FOR DIAGRAMMATICAL PURPOSES ONLY; ALTERNATE RHEEM UNITS MAY VARY IN APPEARANCE

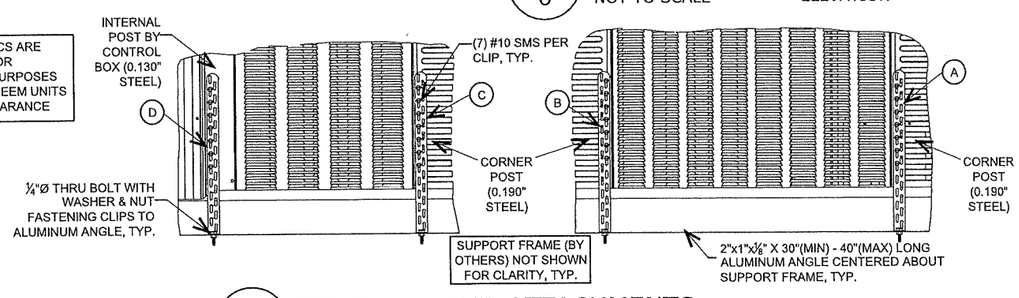

4/6 TIE-DOWN CLIP ATTACHMENTS
NOT TO SCALE — ELEVATIONS

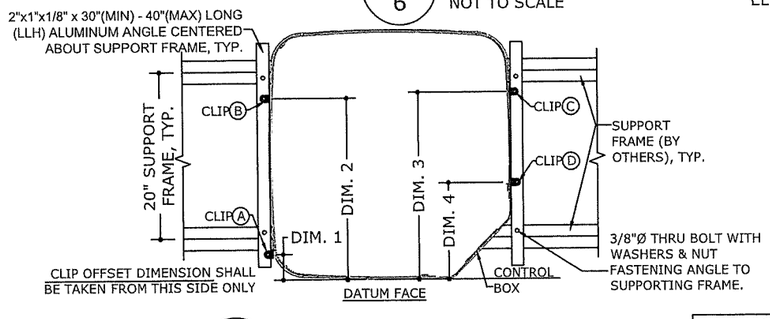

5/6 TIE-DOWN CLIP LAYOUT
NOT TO SCALE — ELEVATIONS

TIE-DOWN CLIP OFFSETS:

DIM. 1	4.50" MAX OFFSET FROM DATUM FACE
DIM. 2	28.00" MIN OFFSET FROM DATUM FACE
DIM. 3	29.00" MIN OFFSET FROM DATUM FACE
DIM. 4	13.00" MAX OFFSET FROM DATUM FACE

NOTE: UNIT SHALL BE CENTERED ABOUT THE 20" RAIL TO RAIL SUPPORTING FRAME (BY OTHERS)

ENGINEERING EXPRESS®
POSTAL ADDRESS:
401 W. ATLANTIC AVE R10 BOX 219
DELRAY BEACH, FL 33444
ENGINEERINGEXPRESS.COM

RHEEM SALES COMPANY
5600 OLD GREENWOOD RD
FORT SMITH, AR 72917
(770) 351-3000

MECHANICAL UNIT STEEL AND ALUMINUM TIE-DOWN CLIPS FOR GRADE AND ROOFTOP APPLICATIONS
FBC 7TH EDITION. (2020) | MIAMI-DADE COUNTY NOA

REMARKS	DRWN	CHKD	DATE
INIT ISSUE	JAC	TSB	05/14/15
2017 FBC UPDATE	LAO	FLB	01/12/18
2020 FBC	CCB	RWN	10/19/20
ADD MODEL NOTE	EPR	RWN	03/10/23
-	-	-	-

COPYRIGHT ENGINEERING EXPRESS®

20-28800RE

SCALE: NTS UNLESS NOTED

6 OF 7

c:\users\eric\engineering express\production - documents\projects\20-\20-28800 - noa 18-0719.07- wind load cert of mechanical unit\wp\2020 fbc\20-28800f - noa dwg.dwg
23 4:02 PM ERIC

Miami Dade County Department of Regulatory and Economic Resources - Job Copy
2025008506 - 5/19/2025 11:05:46 AM
RHEEM AC NOA.pdf

RHEEM SALES COMPANY, INC.

WIND LOAD CERTIFICATION OF MECHANICAL UNIT CABINETRY AND STEEL TIE-DOWN CLIPS: ROOF MOUNTED APPLICATIONS

FRANK BENNARDO, P.E.
PE# 0046549 CA# 9885

MARCH 16, 2023

FRANK L. BENNARDO LICENSE No PE0046549 STATE OF FLORIDA PROFESSIONAL ENGINEER

PRODUCT REVISED
as complying with the Florida Building Code
NOA-No. 23-0328.04
Expiration Date 02/25/2026
By
Miami-Dade Product Control

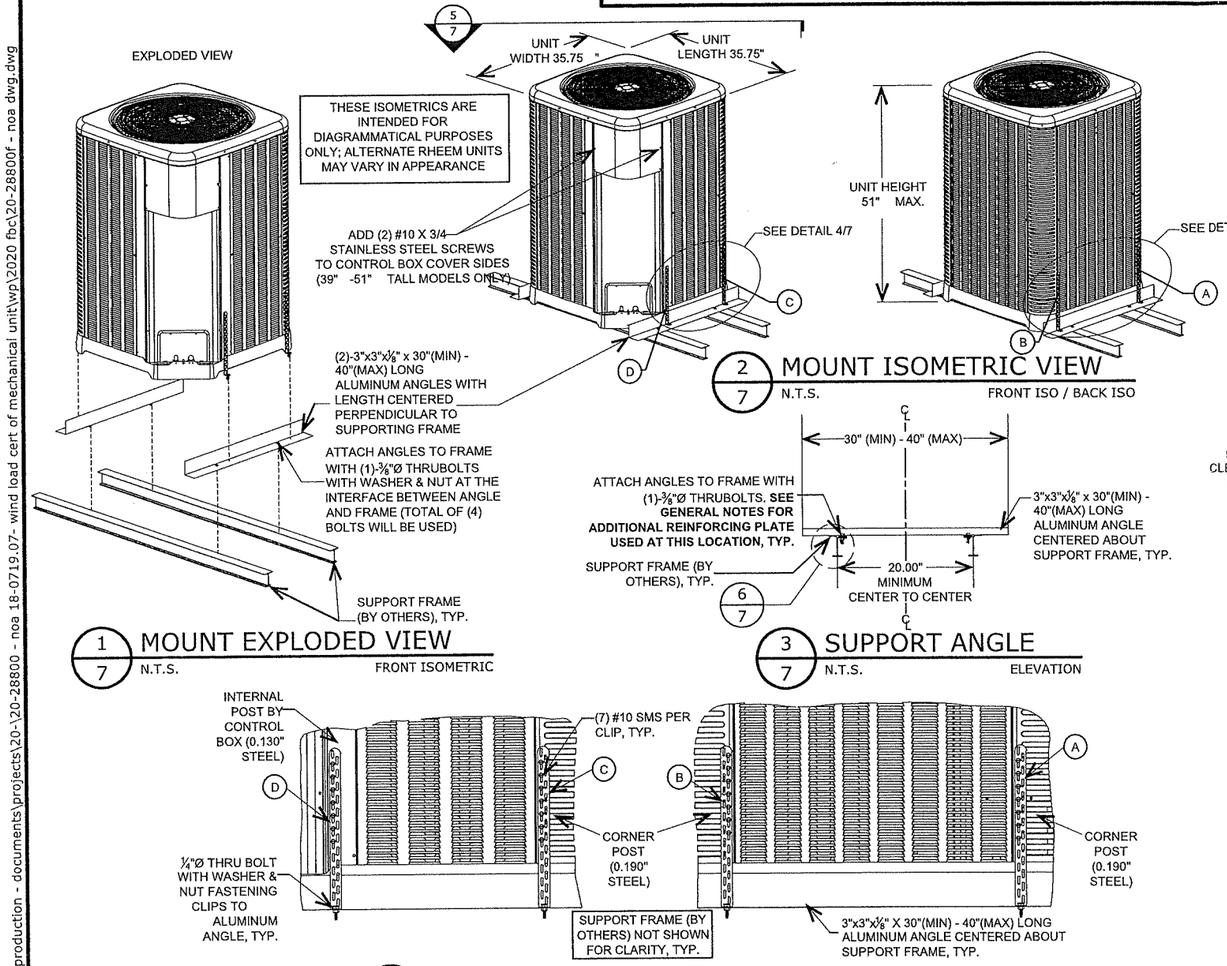

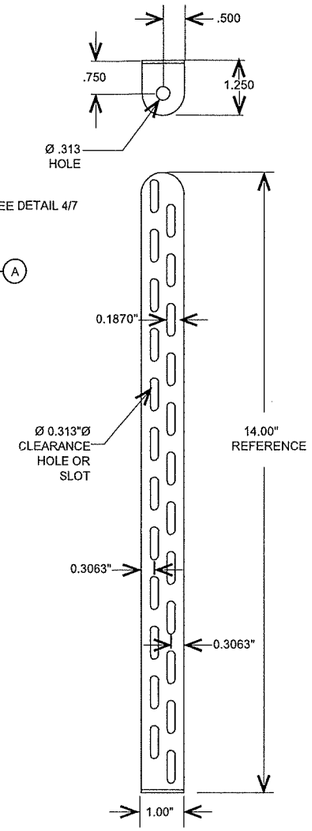

TIE-DOWN CLIP

MIAMI TECH CLIP: 12GA (0.09") ASTM A653 Fu=90 KSI STEEL (CUTD14), MIAMI TECH KIT # RRCUTD36K

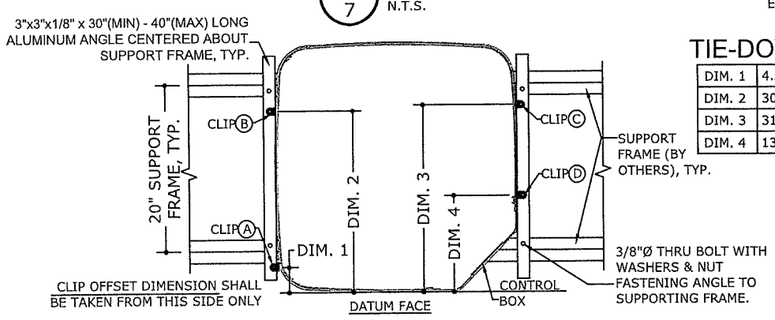

NOTE: UNIT SHALL BE CENTERED ABOUT THE 20" RAIL TO RAIL SUPPORTING FRAME (BY OTHERS)

TIE-DOWN CLIP OFFSETS:

DIM. 1	4.50" MAX OFFSET FROM DATUM FACE
DIM. 2	30.00" MIN OFFSET FROM DATUM FACE
DIM. 3	31.00" MIN OFFSET FROM DATUM FACE
DIM. 4	13.00" MAX OFFSET FROM DATUM FACE

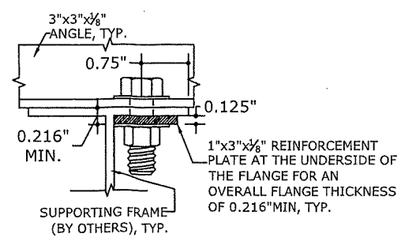

ENGINEERING EXPRESS®
POSTAL ADDRESS:
401 W. ATLANTIC AVE R10 BOX 219
DELRAY BEACH, FL 33444
ENGINEERINGEXPRESS.COM

RHEEM SALES COMPANY
5600 OLD GREENWOOD RD
FORT SMITH, AR 72917
(770) 351-3000

MECHANICAL UNIT STEEL AND ALUMINUM TIE-DOWN CLIPS FOR GRADE AND ROOFTOP APPLICATIONS FBC 7TH EDITION. (2020) | MIAMI-DADE COUNTY NOA

REMARKS	DRWN	CHKD	DATE
INIT ISSUE	JAC	TSB	05/14/15
2017 FBC UPDATE	LAO	FLB	01/12/18
2020 FBC	CCB	RWN	10/19/20
ADD MODEL NOTE	EPR	RWN	03/10/23
-	-	-	-

COPYRIGHT ENGINEERING EXPRESS®

20-28800RE

SCALE: NTS UNLESS NOTED

7 OF 7

c:\users\eric\engineering express\production - documents\projects\20-\20-28800 - noa 18-0719.07- wind load cert of mechanical unit\wp\2020 fbc\20-28800f - noa dwg.dwg
ERIC
03/23/23 4:02 PM

Miami Dade County Department of Regulatory and Economic Resources - Job Copy
2025C08506 - 5/19/2025 11:05:46 AM
RHEEM AC NOA.pdf

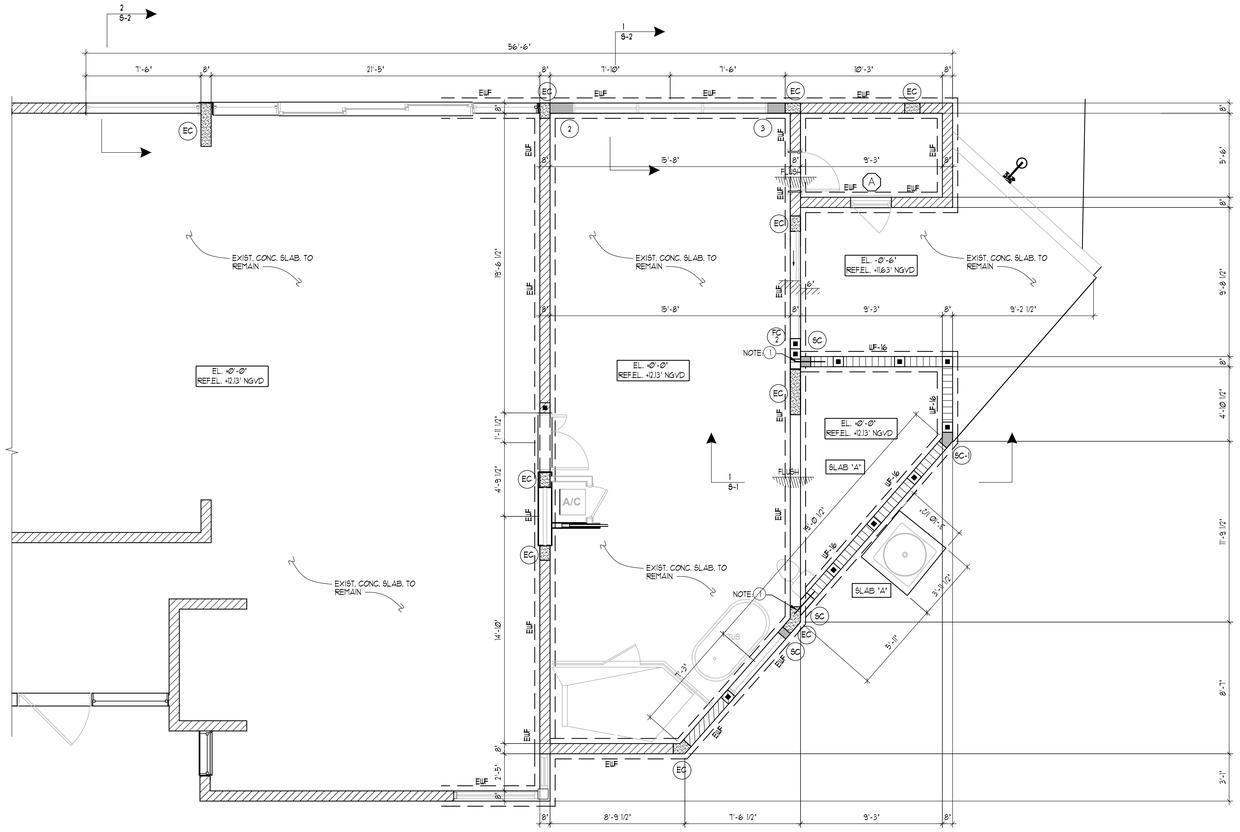

SLAB'A'
4" CONC. SLAB OVER 6 MIL VISQUEEN ON CLEAN FINE SAND FILL COMPACTED IN 12" LAYERS TO 95% OF THE MODIFIED PROCTOR DENSITY TEST, ASTM D 1556, AND ASTM D 1557. SEE SOIL STATEMENT NOTED BELOW. REINFORCE W/ 6 X 6 W.4 X W.4 WELDED WIRE FABRIC, PLACED 1½" FROM TOP OF SLAB. TYP. GROUND FLOOR SLAB.

NOTE: (1)
DRILL ¾" ϕ x 6" INTO EXIST. FTG. & SET 3 #5 x 3'-0" LONG DOWELS IN EPOXY GROUT. (TYP.)

PARTIAL FOUNDATION/GROUND FLOOR PLAN

SCALE: 1/4"=1'-0"

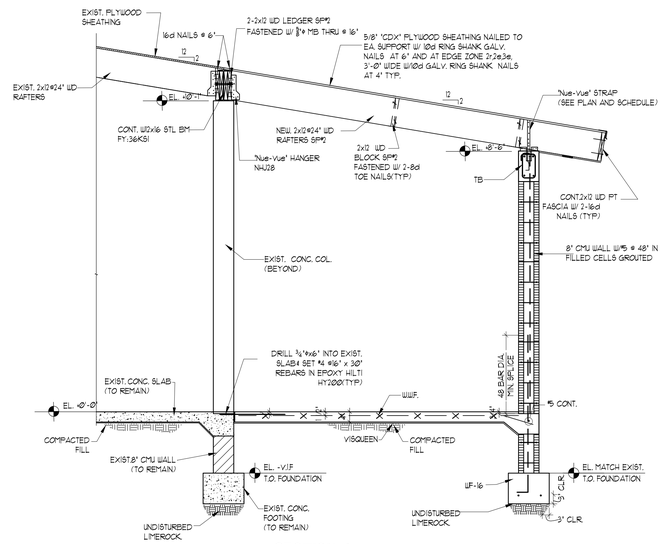

SECTION 1

½" = 1'-0"

SOIL STATEMENT :

FOUNDATION SYSTEM CONSISTS OF SHALLOW SPREAD FOOTINGS BEARING ON SAND & ROCK.

ALLOWABLE SOIL BEARING PRESSURE USED IN THE DESIGN OF FOOTINGS IS 2000 PSF.

ENGINEER OF RECORD WILL SUBMIT A SIGNED AND SEALED LETTER TO THE BUILDING OFFICIAL ATTESTING THAT THE SITE HAS BEEN OBSERVED AND THE FOUNDATION CONDITIONS ARE SIMILAR TO THOSE UPON WHICH THE DESIGN IS BASED BEFORE CONSTRUCTION STARTED.

CONCRETE MASONRY NOTE:

ALL CONCRETE MASONRY UNITS(C/MU) SHALL CONFORM TO ASTM C 90 "STANDARD SPECIFICATIONS FOR HOLLOW LOAD BEARING CONCRETE MASONRY" UNITS, WITH A NET AREA COMPRESSIVE STRENGTH OF MASONRY OF 1500 PSI.
ALL MASONRY WALLS SHALL BE LOAD BEARING IN THIS LEVEL AND REINFORCED W/#5 @ 48" U.N.O.

NOTES:
1. TERMITE TREATMENT OF SOILS UNDER SLAB ON GRADE SHALL BE PERFORMED BEFORE POURING SLAB. TERMITE PROTECTION SHALL BE PROVIDED BY REGISTERED TERMICIDES OR OTHER APPROVED METHODS OF TERMITE PROTECTION LABELED AS A PREVENTIVE TREATMENT TO NEW CONSTRUCTION.

SLAB REINFORCEMENT NOTE:

"D" BARS: 2#4 CORNER BARS x 36 INCHES LONG PLACED DIAGONALLY TO THE CORNER, 12 " APART WITH THE FIRST BAR PLACED 2 INCHES FROM THE CORNER. ALL REINFORCEMENT SHALL BE APPROPRIATELY POSITIONED IN THE UPPER THIRD OF THE SLAB.

ELECTRONICAL SIGNITURE STATEMENT:
THIS ITEM HAS BEEN DIGITALLY SIGNED AND SEALED BY JOAQUIN MONTESINO, PE ON 1-3-24. PRINTED COPIES OF THIS DOCUMENT ARE NOT CONSIDERED SIGNED AND SEALED AND THE SIGNATURE MUST BE VERIFIED ON ANY ELECTRONIC COPIES.

LEGEND:

- NEW 8" C/MU WALL
- NEW CONC. COLUMN OR TIE COLUMN
- CONC. COLUMN FINISHED
- TB NEW TIE BM
- UF NEW WALL FOOTING
- EUF EXIST. WALL FOOTING
- ETB EXIST. TIE BEAM

JOAQUIN MONTESINO LICENSE No. 69969 STATE OF FLORIDA PROFESSIONAL ENGINEER

Digitally signed by JOAQUIN MONTESINO
Date: 2024.12.17 12:40:30 -05'00'

WRITTEN DIMENSIONS ON THESE DRAWINGS SHALL HAVE PRECEDENCE OVER SCALE DIMENSIONS. CONTRACTORS SHALL VERIFY AND BE RESPONSIBLE FOR ALL DIMENSIONS AND CONDITIONS ON THE JOB AND THIS OFFICE MUST BE NOTIFIED OF ANY VARIATION FROM THE DIMENSIONS AND CONDITIONS SHOWN BY THESE DRAWINGS

G2 CONSULTING GROUP, INC.
JOAQUIN MONTESINO ,PE
CONSULTING ENGINEERS
9725 SW. 4 TERR. MIAMI FL. 33174
PHONE & FAX (786) 294-00-32
LIC. #66966 CA 26982

NOVUS Archetype
architecture / interior / planning
NOVUS Archetype, LLC
12721 SW 30th ST. MIAMI, FL 33175
PH: (305) 505-6910
email: julio@novusarchetype.com
AA26001460
Qualifier: Julio Pulido, AIA
License #: AR93904
Qualifier : Salvador Ben Mitrani, NCARB
License # : AR99606

Dylan & Jamie Roy

Interior Remodeling & Addition

6783 SW 104th St Pincrest, Fl 33156

No.	Description	Date

Project number	24-011
Date	07-10-24
Drawn by	JP
Checked by	JP

SHEET TITLE

SHEET No.

S-1

Miami Dade County Department of Regulatory and Economic Resources - Job Copy
2025008506 - 5/19/2025 11:05:46 AM
S-1.pdf

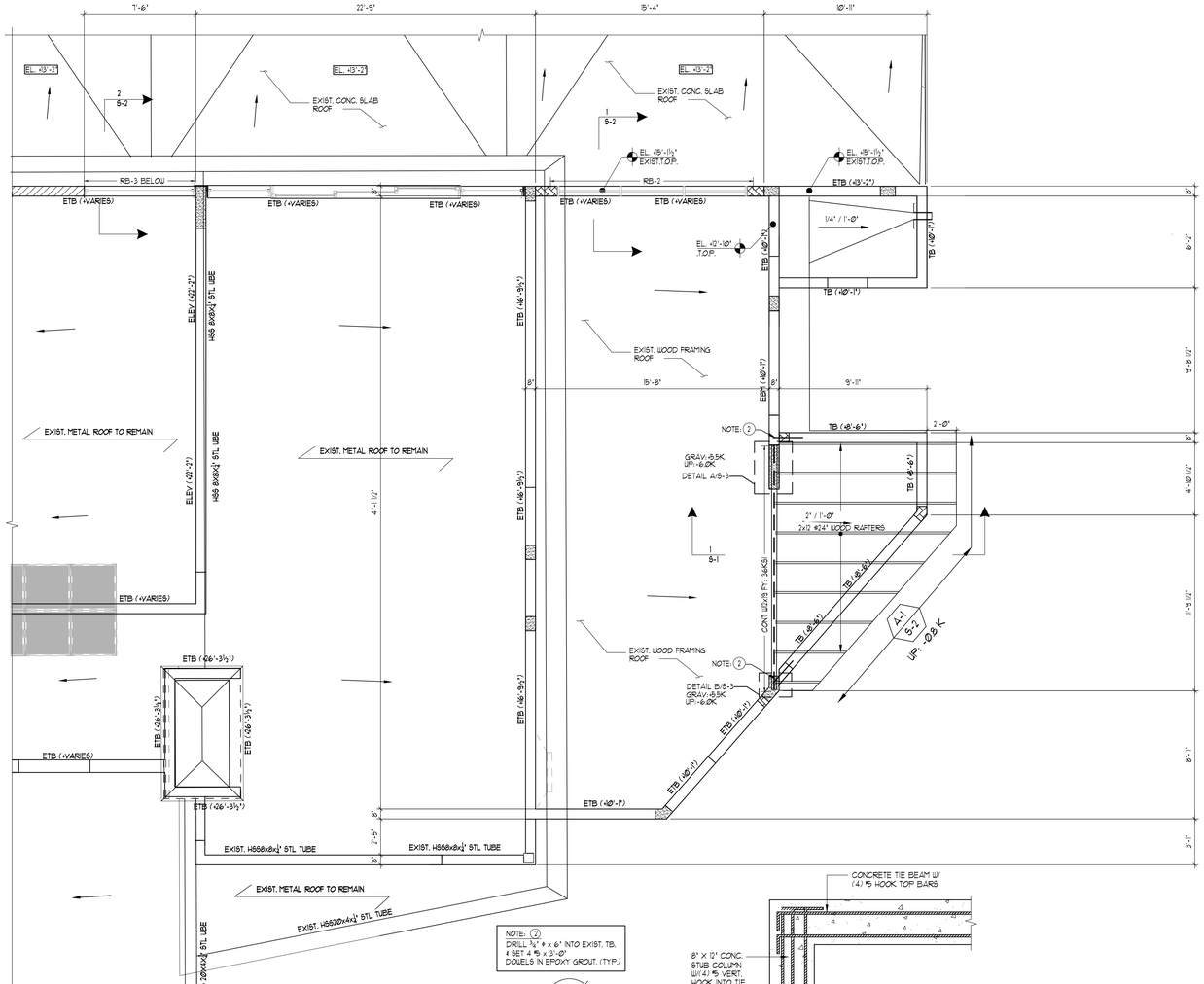

NOTE: 2
DRILL ¾" ø x 6" INTO EXIST. TB. & SET 4 #5 x 3'-0" DOWELS IN EPOXY GROUT. (TYP.)

PARTIAL ROOF FRAMING PLAN

SCALE: 1/4"=1'-0"

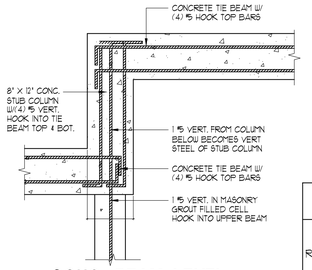

CONC. BEAM LEVEL CHANGE DETAIL

N.T.S.

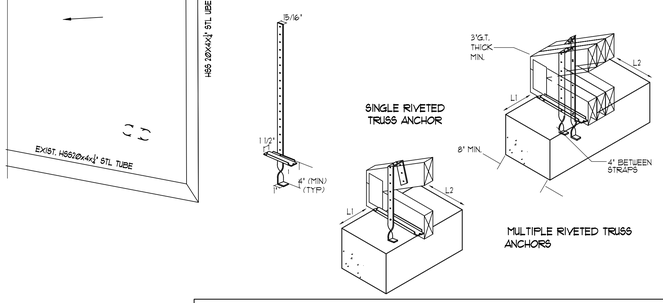

PLYWOOD ROOF SHEAR DIAPHRAGM SCHEDULE

ROOF	APA RATED SHEATHING EXP. 1, OR EQUAL.	2'-0" MAX.	5/8" NOM.	4"@ ZONE 2&3	4"@ZONE 2 & 3	10d RING SHANK NAILS	UNBLOCKED DIAPHRAGM UNO- SEE DTLS.
				6" @ ZONE 1	6"@ZONE 1		

NOTES: 1. INSTALL PLYWOOD PANELS AS SHOWN ON DETAIL BELOW;
2. SPACE NAILS @ 6" O.C. ALONG INTERMEDIATE FRAMING MEMBERS FOR ROOF.
3. ZONES 1,2 & 3 ARE AS SHOWN BELOW:

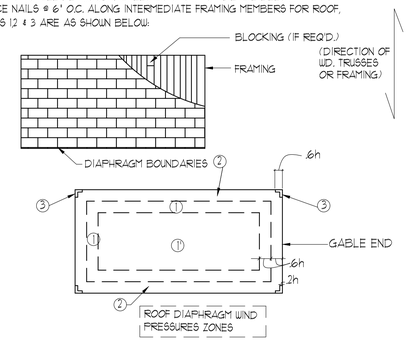

RIVETED TRUSS ANCHOR SCHEDULE CONCRETE TIE-BEAM TO TRUSS

A-X MARK	NUMBER OF STRAPS	SIZE	ASSEMBLY PRODUCT CODE (Nu-Vue)	PRODUCT CODE (Nu-Vue)	GAUGE	DIMENSIONS: OUT OF CONCRETE	DIMENSIONS: OVERHALL LENGTH	NUMBER OF 10d COMM NAILS	# OF PLY	ALLOWABLE LOADS LATERAL L-2	ALLOWABLE LOADS LATERAL L-1	ALLOWABLE LOADS UPLIFT 133% 10d COMM.	ALLOWABLE LOADS UPLIFT NOA #
A-1	1	16	NVSTA 16		14	16	20	9	1	1430 #	950 #	1426 #	23-0210.01

-USE ALL FASTENERS IN SCHEDULE TO ACHIEVE VALUES INDICATED
MINIMUM EDGE DISTANCE IS 2".
-ALLOW 4" EMBEDMENT IN CONCRETE
-DESIGN LOADS BASED ON USE OF SOUTHERN YELLOW PINE, SG=.055
-PROVIDE 6-10d COMM. NAILS @ STEEL SEAT OF STRAPS FOR 1 PLY TRUSS
-PROVIDE 8-10d COMM. NAILS @ STEEL SEAT OF STRAPS FOR 2 & 3 PLY TRUSSES

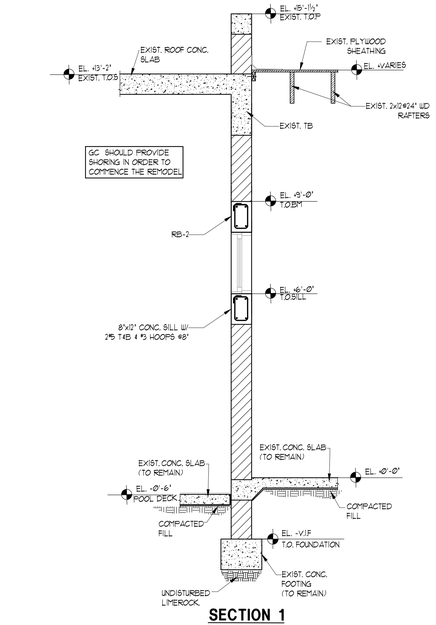

SECTION 1

½" = 1'-0"

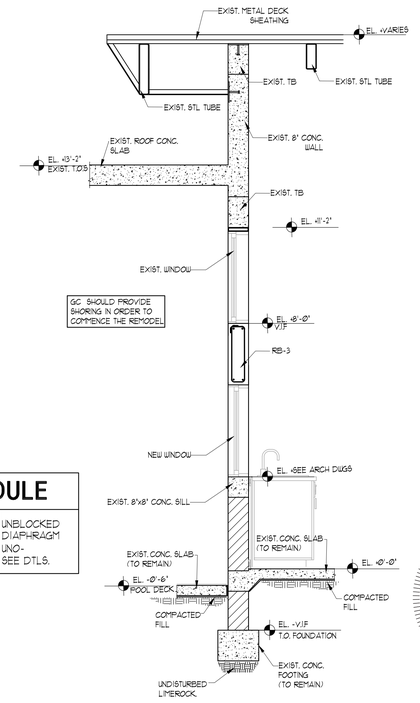

SECTION 2

½" = 1'-0"

ELECTRONICAL SIGNITURE STATEMENT:
THIS ITEM HAS BEEN DIGITALLY SIGNED AND SEALED BY JOAQUIN MONTESINO, P.E. ON 1-3-24. PRINTED COPIES OF THIS DOCUMENT ARE NOT CONSIDERED SIGNED AND SEALED AND THE SIGNATURE MUST BE VERIFIED ON ANY ELECTRONIC COPIES.

GC MUST COORDINATED THIS DRAWINGS IN CONJUCTION WITH ARCHITECTURE, MEP AND TRUSS MANUFACTURE. GC MUST COORDINATE THE FABRICATION OF WOOD TRUSSES WITH THE MEP DRAWINGS BEFORE COMMENCE THE CONSTRUCTION PHASE

ROOF WOOD RAFTERS SUPERIMPOSED LOADS

DEAD	30 P.S.F.
LIVE	30 P.S.F.
BASIC WIND PRESSURE, qh	67.62 P.S.F.
NET WIND UPLIFT, ZONE 1 1	-62.5 P.S.F.
NET WIND UPLIFT, ZONE 2 10'-0" WIDE EDGE STRIP	-83.0P.S.F.
NET WIND UPLIFT, ZONE 3 10'-0" WIDE EDGE STRIP	-81.6P.S.F.

EXPOSURE "C" V=175MPH h=16 FT "a"=10FT

LEGEND:

- NEW 8" CMU WALL
- NEW CONC. COLUMN OR TIE COLUMN
- CONC. COLUMN FINISHED
- TB NEW TIE BM
- WF NEW WALL FOOTING
- EWF EXIST. WALL FOOTING
- ETB EXIST. TIE BEAM

WRITTEN DIMENSIONS ON THESE DRAWINGS SHALL HAVE PRECEDENCE OVER SCALE DIMENSIONS. CONTRACTORS SHALL VERIFY AND BE RESPONSIBLE FOR ALL DIMENSIONS AND CONDITIONS ON THE JOB AND THIS OFFICE MUST BE NOTIFIED OF ANY VARIATION FROM THE DIMENSIONS AND CONDITIONS SHOWN BY THESE DRAWINGS

G2 CONSULTING GROUP, INC.
JOAQUIN MONTESINO ,PE
CONSULTING ENGINEERS
9725 SW. 4 TERR. MIAMI FL. 33174
PHONE & FAX (786) 294-00-32
LIC: #69969 CA 25982

Digitally signed by JOAQUIN MONTESINO
Date: 2024.12.17 12:40:53 -05'00'

NOVUS Archetype
architecture / interior / planning
NOVUS Archetype, LLC
12721 SW 30th ST. MIAMI, FL 33175
PH: (305) 505-6910
email: julio@novusarchetype.com
AA26001460
Qualifier: Julio Pulido, AIA
License #: AR93904
Qualifier : Salvador Ben Mitranli, NCARB
License # : AR99606

Dylan & Jamie Roy

Interior Remodeling & Addition

6783 SW 104th St Pincrest, Fl 33156

No.	Description	Date

Project number	24-011
Date	07-10-24
Drawn by	JP
Checked by	JP

SHEET TITLE

SHEET No.

S-2

Miami Dade County Department of Regulatory and Economic Resources - Job Copy
2025008506 - 5/19/2025 11:05:46 AM
S-2.pdf

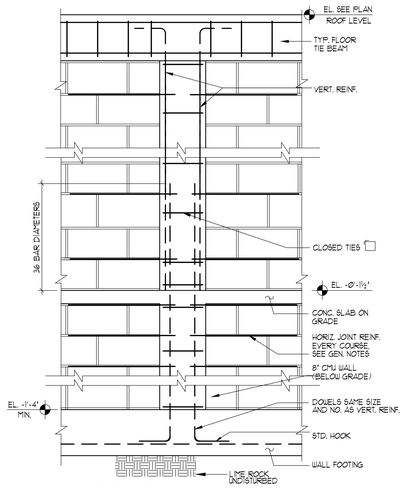

TYP. CONC. TIE COL.-WALL FOOTING DETAIL

3/4" = 1'-0"

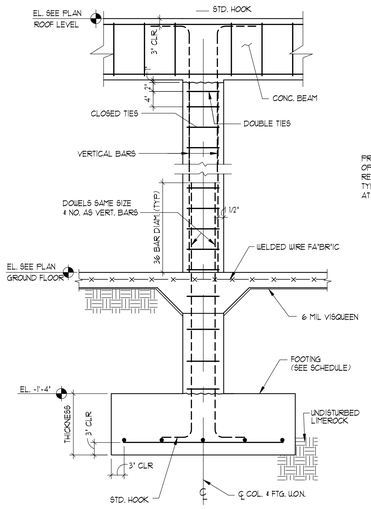

TYPICAL COLUMN-FOOTING DETAIL

N.T.S.

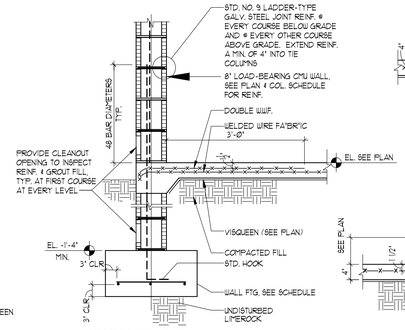

TYPICAL CMU WALL-FOOTING DETAIL

3/4" = 1'-0"

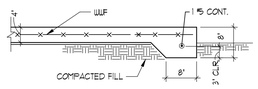

SLAB EDGE DETAIL (TE)

3/4" = 1'-0"

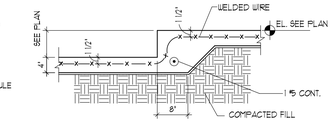

TYPICAL SLAB ON GRADE ELEVATION CHANGE

3/4" = 1'-0"

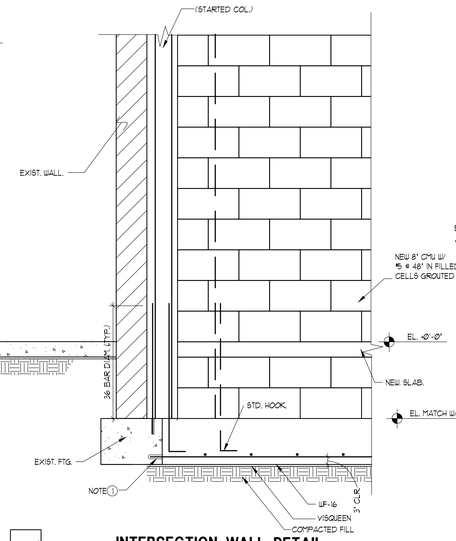

INTERSECTION WALL DETAIL

3/4" = 1'-0"

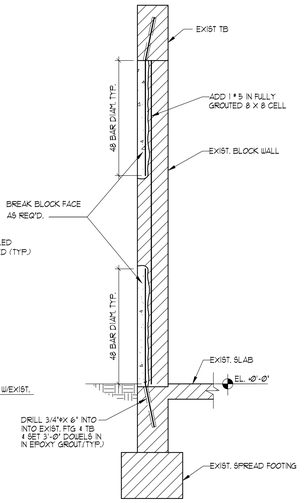

TYPICAL DETAIL FILL CELL COLUMN ADDITION

3/4" = 1'-0"

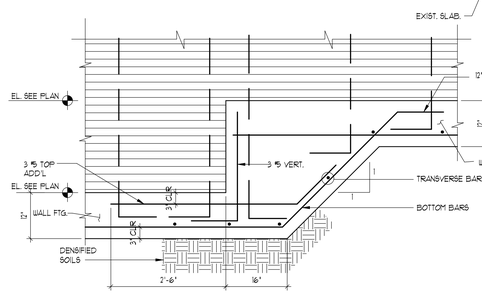

TYPICAL STEPPED FOOTING DETAIL

3/4"=1'-0"

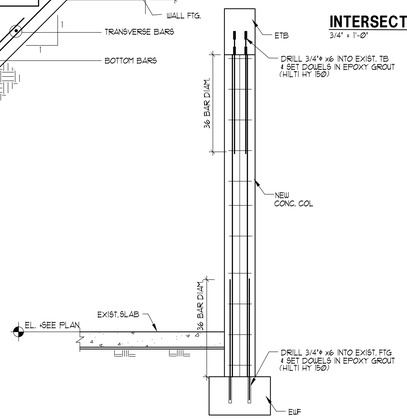

TYP. CONC. COL ADDITION DETAIL

3/4" = 1'-0"

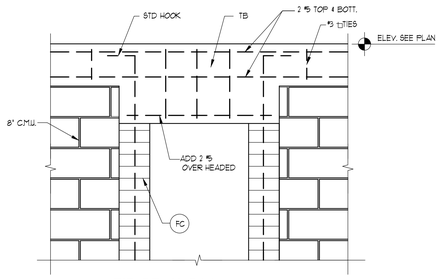

TIE BEAM RDOP DETAIL

3/4" = 1'-0"

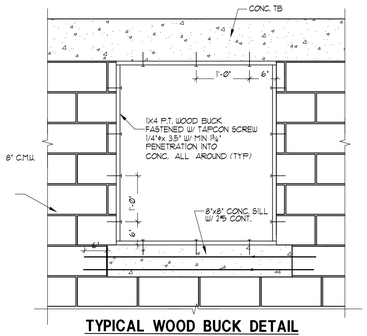

TYPICAL WOOD BUCK DETAIL

3/4" = 1'-0"

CONCRETE BEAM SCHEDULE

MARK	TOP ELEV.	SIZE W x H	REINFORCING "B"	"T"	"C"	"E"	"D"	"I" E.A. FACE	TIES OR STIRRUP NO.	TYPE	SPACING EA END	REMARKS
RB-1	OMITTED											
RB-2	-8'-0"	8" x 12"	2 # 6	2 # 5					# 3	▢	@ 4"	
RB-3	-8'-0"	8" x 24"	2 # 5	2 # 5					# 3	▢	@ 8"	
TB	SEE PLAN	8" X 12" MIN.	2 # 5	2 # 5					# 3	▢	4 @ 12", BALANCE 48"	PROVIDE 2 #5 X 2'-6" X 2'-6" CORNERS BARS, RDOP OVER OPENING ADD #5 E.A FACE BOTT. WHEN DEPTH EXCEEDS 36" ADD #4 @ 12" "I" BARS EA FACE

FOOTING SCHEDULE

MARK	SIZE LxWxTHICKNESS	REINFORCEMENT BOTTOM SHORT BARS	BOTTOM LONG BARS	TOP SHORT BARS	TOP LONG BARS	REMARKS
WF-16	CONT (16"X12")		2 # 5	—	—	PROVIDE 2#5 X 2'-6"X2'-6" CORNERS BARS
F4Ø	4'-0"X 4'-0"X 12"	6 #4	6 #4			
TE.	CONT. 8 X 8	—	1 # 5	—	—	THICK EDGE

COLUMN SCHEDULE

MARK	SIZE W+D	REINFORCEMENT VERTICAL OR BASE PLATE	TIES OR CAP PLATE	REMARKS
1	OMITTED			
2	8" x 18"	6 # 5	# 3 @ 8"	
3	8" x 14"	4 # 6	# 3 @ 8"	
SC	8" X 8"	2 # 5		STARTED COL
FC	#5@ 48" IN FILLED CELLS GROUTED (U.O.N.)			

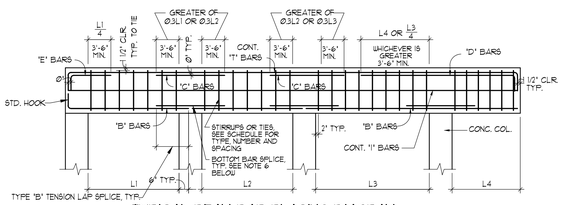

TYPICAL BEAM BAR PLACING DIAGRAM

NOTES:

1. PLACE A MAXIMUM OF 2 BARS PER LAYER IN 8"-WIDE BEAMS.
2. SPLICE TOP BARS AT MID SPAN W/ CLASS "B" TENSION LAP SPLICES.
3. SPLICE "I" BARS AT SUPPORTS W/ CLASS "B" TENSION LAP SPLICES.
4. PLACE "C" BARS OVER RIGHT-HAND SUPPORT, UNLESS NOTED IN REMARKS.
5. "I" BARS AS SCHEDULED SHALL BE PLACED EACH SIDE OF BEAM.
6. PROVIDE 1/4 OF THE AREA OF THE BOTTOM REINFORCING OF THE ADJACENT SPAN WITH THE HIGHEST AREA OF BOTTOM REINFORCING, BUT NOT LESS THAN TWO BARS. BAR SIZE NO LESS THAN A #5 BAR. WHERE ADJACENT BEAMS ARE DIFFERENT IN DEPTH PLACE THE SPLICE BAR AT THE LEVEL OF THE BOTTOM BARS OF THE SHALLOWEST BEAM.

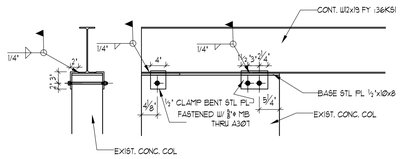

DETAIL A

3/4" = 1'-0"

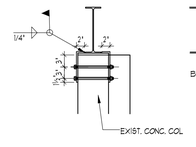

DETAIL B

3/4" = 1'-0"

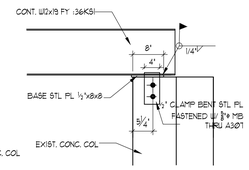

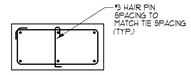

SIX BAR COL. DETAIL

3/4" = 1'-0"

ELECTRONICAL SIGNITURE STATEMENT:
THIS ITEM HAS BEEN DIGITALLY SIGNED AND SEALED BY JOAQUIN MONTESINO, PE ON 1-3-24. PRINTED COPIES OF THIS DOCUMENT ARE NOT CONSIDERED SIGNED AND SEALED AND THE SIGNATURE MUST BE VERIFIED ON ANY ELECTRONIC COPIES.

JOAQUIN MONTESINO LICENSE No. 69969 STATE OF FLORIDA PROFESSIONAL ENGINEER

Digitally signed by JOAQUIN MONTESINO
Date: 2024.12.17 12:41:07 -05'00'

WRITTEN DIMENSIONS ON THESE DRAWINGS SHALL HAVE PRECEDENCE OVER SCALE DIMENSIONS. CONTRACTORS SHALL VERIFY AND BE RESPONSIBLE FOR ALL DIMENSIONS AND CONDITIONS ON THE JOB AND THIS OFFICE MUST BE NOTIFIED OF ANY VARIATION FROM THE DIMENSIONS AND CONDITIONS SHOWN BY THESE DRAWINGS

G2 CONSULTING GROUP, INC.
JOAQUIN MONTESINO ,PE
CONSULTING ENGINEERS
9725 SW. 4 TERR. MIAMI FL. 33174
PHONE & FAX (786) 294-00-32
LIC. #69969 CA 25682

NOVUS Archetype
architecture / interior / planning
NOVUS Archetype, LLC
12721 SW 30th ST. MIAMI, FL 33175
PH: (305) 505-6910
email: julio@novusarchetype.com
AA26001460
Qualifier: Julio Pulido, AIA
License #: AR93904
Qualifier : Salvador Ben Mitrani, NCARB
License # : AR99606

Dylan & Jamie Roy

Interior Remodeling & Addition

6783 SW 104th St Pincrest, Fl 33156

No.	Description	Date

Project number	24-011
Date	07-10-24
Drawn by	JP
Checked by	JP

SHEET TITLE

SHEET No.

S-3

Miami Dade County Department of Regulatory and Economic Resources - Job Copy
2025008506 - 5/19/2025 11:05:46 AM
S-3.pdf

STRUCTURAL NOTES

1. FOUNDATION:

A. FOUNDATION SYSTEM CONSISTS OF SHALLOW SPREAD FOOTINGS DESIGNED FOR AN ALLOWABLE SOIL BEARING PRESSURE OF 2,000 PSF. FOOTINGS SHALL BEAR ON UNDISTURBED LIMEROCK.
B. PROVIDE ANY "BRACING OR SHORING AS REQUIRED IN ORDER TO PREVENT SETTLEMENT OR DISPLACEMENT OF ADJACENT EXISTING FOUNDATIONS AND /OR STRUCTURES.
C. ALL FOUNDATION EXCAVATIONS SHALL BE KEPT DRY. FOUNDATION CONCRETE SHALL BE POURED ONLY UNTIL EXCAVATIONS ARE COMPLETELY DRY. TAKE EVERY PRECAUTION DURING DEWATERING OPERATIONS SO THAT EXISTING ADJACENT STRUCTURES, UTILITIES, PIPING, ETC. ARE NOT DAMAGED.
D. CENTERS OF COLUMNS SHALL COINCIDE WITH CENTERS OF FOOTINGS, UNLESS OTHERWISE NOTED IN FOUNDATION PLANS AND FOOTING DETAILS.
E. TOP OF FOUNDATION ELEVATIONS SHOWN IN PLAN ARE BASED ON THE BEST AVAILABLE INFORMATION GATHERED FROM SOIL BORING LOADS SOIL CONDITIONS ENCOUNTERED DURING FOUNDATION EXCAVATIONS MIGHT DICTATE TOP OF FOUNDATION ELEVATION TO BE LOWERED IN ORDER TO EMBED FOUNDATIONS A MINIMUM OF 6 INCHES INTO THE EXISTING LIMEROCK BEARING STRATA.
F. FOUNDATIONS MAY BE EARTH-FORMED IF SOIL CONDITIONS PERMIT. EXCAVATE TO EXACT FOUNDATION SIZES.
G. FOUNDATION EXCAVATIONS SHALL BE INSPECTED BY ENGINEER OF RECORD AND GEOTECHNICAL ENGINEER AND NO FOUNDATIONS SHALL BE POURED UNTIL GEOTECHNICAL ENGINEER CERTIFIES THAT SOIL CONDITIONS ARE AS PER GEOTECHNICAL REPORT.

2. GENERAL:

A. ALL MATERIALS AND CONSTRUCTION SHALL COMPLY WITH THE FLORIDA BUILDING CODE, 2020 7th EDITION, HVAC, ASCE 7-16 "MINIMUM DESIGN LOADS FOR BUILDINGS", THE ACI 318-14 BUILDING CODE, AND ALL APPLICABLE FEDERAL, STATE AND LOCAL ORDINANCES.
B. THESE RDLAWNGS AND SPECIFICATIONS COMPLY, TO THE BEST OF MY KNOWLEDGE WITH THE FLORIDA BUILDING CODE, 2020 7TH EDITION, HVHZ.
C. THE CONTRACTOR SHALL VERIFY ALL CONDITIONS OF EXISTING STRUCTURES AFFECTING NEW CONSTRUCTION BEFORE COMMENCING ANY WORK. ANY VARIATIONS IN ACTUAL FIELD CONDITIONS/DIMENSIONS FROM THOSE SHOWN IN THE CONTRACT RDLAWNGS SHALL BE REPORTED TO THE ARCHITECT/ENGINEER FOR DETERMINING THE NEED OF REDESIGN PRIOR TO CONTRACTOR'S SUBMITTAL OF SHOP WORKING RDLAWNGS FOR REVIEW.
D. THESE RDLAWNGS SHALL BE WORKED TOGETHER WITH ARCHITECTURAL, AIR CONDITIONING, MECHANICAL AND ELECTRICAL RDLAWNGS TO LOCATE DEPRESSED SLABS, SLOPES RDLAWNS, OUTLETS, RECESSES, OPENINGS, REGLETS, BOLT SETTINGS, SLEEVES, ETC. DISCREPANCIES SHALL BE "BROUGHT TO THE ATTENTION OF ARCHITECT/ ENGINEER BEFORE PROCEEDING WITH THE WORK. ANY DISCREPANCIES, OMISSIONS OR VARIATIONS FOUND ON THE RDLAWNGS OR IN THE SPECIFICATIONS DISCOVERED DURING THE BIDDING PHASE SHALL BE IMMEDIATELLY COMMUNICATED TO ARCHITECT/ ENGINEER.
E. WHEN PERFORMING WORK BELOW GRADE, CARE SHALL BE TAKEN TO AVOID DAMAGING ANY EXISTING UTILITIES. ALL UNKNOWN UTILITIES DISCOVERED DURING CONSTRUCTION SHALL BE "BROUGHT TO THE ATTENTION OF THE ARCHITECT/ENGINEER. ANY DAMAGE TO THE EXISTING UTILITIES SHALL BE REPORTED TO ALL AFFECTED PARTIES, INCLUDING THE ARCHITECT/ENGINEER.
F. GENERAL CONTRACTOR SHALL BE RESPONSIBLE FOR UPDATING HIS CONSTRUCTION DOCUMENTS WITH THE REVISED RDLAWNGS AND SPECIFICATIONS, FIELD ORDERS, CHANGE ORDERS AND CLARIFICATION SKETCHES ISSUED DURING THE COURSE OF CONSTRUCTION.
G. TYPICAL DETAILS AND NOTES ON THESE RDLAWNGS SHALL APPLY UNLESS SPECIFICALLY NOTED OTHERWISE. CONSTRUCTION DETAILS AND SECTIONS NOT COMPLETELY SHOWN OR NOTED SHALL BE SIMILAR TO DETAILS AND SECTIONS SHOWN OR NOTED FOR SIMILAR CONDITIONS.
H. THE GENERAL CONTRACTOR SHALL BE SOLELY RESPONSIBLE FOR ALL EXCAVATION PROCEDURES INCLUDING LAGGING, SHORING, AND PROTECTION OF ADJACENT PROPERTY, STRUCTURES, STREETS AND UTILITIES IN ACCORDANCE WITH THE LOCAL BUILDING DEPARTMENT.
I. BACKFILL AROUND THE EXTERIOR PERIMETER OF WALLS SHALL NOT BE PLACED UNTIL AFTER THE WALLS ARE SUPPORTED BY THE COMPLETION OF INTERIOR FLOOR SYSTEMS. DO NOT PROCEED WITH BACKFILL UNTIL (7) DAYS AS A MINIMUM AFTER THE COMPLETION OF INTERIOR FLOOR SYSTEM UNLESS WALLS ARE ADEQUATELY "BRACED. BACKFILL SHALL NOT BE PLACED UNTIL AFTER COMPLETION AND INSPECTION OF WATERPROOFING WHERE WATERPROOFING OCCUR.
J. GENERAL CONTRACTOR SHALL BE RESPONSIBLE FOR THE DISPOSAL OF ALL ACCUMULATED WATER FROM EXCAVATIONS AND DEWATERING OPERATIONS IN SUCH A WAY AS TO NOT CAUSE INCONVENIENCE TO THE WORK AND DAMAGE TO THE STRUCTURAL ELEMENTS.
K. STRUCTURAL NOTES SHALL BE USED IN CONJUNCTION WITH THE SPECIFICATIONS. IF A CONFLICT EXISTS, THE MORE STRINGENT GOVERNS.
L. GENERAL CONTRACTOR SHALL PROTECT EXISTING FACILITIES, STRUCTURES AND UTILITY LINES AND CONDUITS FROM DAMAGE. GENERAL CONTRACTOR IS SOLELY RESPONSIBLE FOR DAMAGE OR INJURY DUE TO HIS ACT OR NEGLECT.
M. GENERAL CONTRACTOR IS SOLELY RESPONSIBLE FOR JOB SAFETY, MEANS AND METHODS OF CONSTRUCTION AND CONSTRUCTION PROCEDURES.
N. DO NOT SCALE THESE RDLAWNGS. USE DIMENSIONS NOTED. IF DIMENSIONS ARE MISSING CONSULT ARCHITECT/ENGINEER FOR ADVISE.

3. SHOP RDLAWNGS SUBMITTALS:

A. SUBMITTALS TO STRUCTURAL ENGINEER OF RECORD:
   I. CONCRETE TEST REPORTS FOR CAST-IN-PLACE CONCRETE AS PER ACI 301-11.
   II. REINFORCING STEEL SHOP RDLAWNGS.
   III. PREFABRICATED WOOD AND/OR METAL ROOF TRUSSES , ERECTION RDLAWNGS, AND DESIGN DATA.
   IV. STRUCTURAL STEEL SHOP RDLAWNGS AND ERECTION RDLAWNGS.
   V. SHORING AND RESHORING SHOP RDLAWNGS AND CALCULATIONS.

B. SHOP RDLAWNGS REQUIRING ENGINEERING BY A SPECIALTY ENGINEER SHALL COMPLY WITH THE FOLLOWING:
   I. THE SPECIALTY ENGINEER SHALL BE A FLORIDA REGISTERED PROFESSIONAL ENGINEER.
   II. THE SPECIALTY ENGINEER SHALL HAVE AT LEAST FIVE YEARS OF SOLID PROFESSIONAL DESIGN EXPERIENCE IN THE DESIGN AND DETAILING OF THE STRUCTURAL COMPONENT AND/OR STRUCTURAL SYSTEM BEING SUBMITTED FOR APPROVAL.
   III. THE SPECIALTY ENGINEER SHALL BE AN EMPLOYEE OR OFFICER OF A FABRICATOR, AN EMPLOYEE OR OFFICER OF ANOTHER COMPANY SUPPLYING COMPONENTS TO THE FABRICATOR
C. ALL SHOP RDLAWNGS ARE AN AID FOR FIELD PLACEMENT AND ARE SUPERSEDED BY THE STRUCTURAL RDLAWNGS. IT SHALL BE THE RESPPONSIBILITY OF THE GENERAL CONTRACTOR TO MAKE CERTAIN THAT ALL CONSTRUCTION IS IN FULL AGREEMENT WITH THE LATEST STRUCTURAL RDLAWNGS.
D. THE CONTRACTOR SHALL SUPPLY THE ENGINEER THREE COPIES OF SHOP RDLAWNGS A MINIMUM OF ONE UEEK PRIOR TO PLACEMENT. THE REVIEW OF SHOP RDLAWNGS BY THE ENGINEER IS ONLY FOR GENERAL COMPLIANCE WITH THE STRUCTURAL RDLAWNGS AND SPECIFICATIONS. THE REVIEW DOES NOT GUARANTEE IN ANY WAY THAT THE SHOP RDLAWNGS ARE CORRECT NOR DOES IT INFER THAT THEY SUPERSEDE THE STRUCTURAL RDLAWNGS. REVIEW WILL NOT INCLUDE CHECK OF DIMENSIONS, LENGTHS OR QUANTITIES.
E. THESE STRUCTURAL RDLAWNGS SHALL NOT BE USED TO PRODUCE SHOP RDLAWNGS WITHOUT PRIOR EXPRESSED WRITTEN APPROVAL FROM THE STRUCTURE ENGINEER OF RECORD.
F. SHOP RDLAWNGS RE-SUBMITTED FOR APPROVAL SHALL BE CLEARLY CLOUDED AND NOTED. RE-REVIEW SHALL BE LIMITED TO THOSE ITEMS WHICH CAUSED THE RE-SUBMITTAL.

4. CONCRETE:

A. ALL CONCRETE WORK SHALL CONFORM TO ALL REQUIREMENTS OF ACI 301-11 "SPECIFICATIONS FOR STRUCTURAL CONCRETE FOR BUILDINGS."
B. CONCRETE COMPRESSIVE STRENGTH AT 28 DAYS SHALL BE AS FOLLOUS:
   FOOTINGS ..... 3,000 PSI
   SLABS ON GRADE ..... 3,000 PSI.
   COLUMNS AND TIE COLUMNS ..... 3,000 PSI.
   ALL OTHER CONCRETE ..... 3,000 PSI.
C. FORMUORK SHALL COMPLY WITH ACI 347-04, " RECOMMENDED PRACTICE FOR CONCRETE FORMUORK.
   MIX DESIGNS SHALL BE SUBMITTED TO THE ENGINEER FOR APPROVAL PRIOR TO COMMENCEMENT OF ANY CONCRETE WORK. SUBMIT STATISTICAL DATA FOR EACH CLASS OF CONCRETE.
E. NO WATER SHALL BE ADDED TO THE CONCRETE AT THE JOB SITE.
F. THE OUNER SHALL CONTRACT AN INDEPENDENT TESTING LABORATORY TO PERFORM CONCRETE CYLINDER TESTS AS FOLLOUS: SIX CYLINDER TESTS FOR ANY 50 CUBIC YARDS OF CONCRETE POURED, OR FRACTION THEREOF FOR EACH CLASS OF CONCRETE POURED EACH DAY. ONE CYLINDER SHALL BE TESTED AT 3 DAYS AND 7 DAYS, THREE AT 28 DAYS, AND ONE RESERVED TO BE TESTED AT 56 DAYS IF REQUIRED. FOLLOU ASTM STANDARDS FOR SAMPLING AND TESTING. ONE SLUMP TEST SHALL BE TAKEN FOR EACH SET OF TEST CYLINDERS CAST. SLUMP TEST SHALL CONFORM WITH ASTM C 143. NO CONCRETE TEST UILL BE ACCEPTED IF CONCRETE IS TAMPERED WITH IN ANY WAY. AFTER SAID TEST IS REINFORMED, REPEAT TEST IF WATER IS ADDED AFTER INITIAL SAMPLING.
G. TRANSPORTING, PLACING, CURING AND DEPOSITING OF CONCRETE SHALL COMPLY WITH ACI 301-08: SPECIFICATIONS FOR STRUCTURAL CONCRETE.
H. CONSTRUCTION JOINTS IN STRUCTURAL SLABS AND BEAMS SHALL BE LOCATED AT 1/3 OF THE SPAN WITH REINFORCING CONTINUOUS ACROSS THE JOINT. PROVIDE A CONTINUOS 2 X 4 SHEAR KEY AT SLABS. AT BEAMS PROVIDE A 1 1/2" DEEP SHEAR KEY WITH A WIDTH 8" SMALLER THAN THE BEAM WIDTH AND A DEPTH 8" SMALLER THAN THE BEAM DEPTH. LOCATIONS SHALL BE APPROVED BY STRUCTURAL ENGINEER OF RECORD BEFORE POUR.
I. MAXIMUM WATER/CEMENT RATIO FOR CONCRETE CONTAINING A SUPERPLASTICIZING ADMIXTURE SHALL BE 0.40. SLUMP AFTER ADDITION OF SUPERPLASTICIZER SHALL BE 8" +/- 1".
J. MINIMUM CONCRETE COVER FOR REINFORCEMENT:
   I. CONCRETE CAST AGAINST AND PERMANENTLY EXPOSED TO EARTH.....3"
   II. CONCRETE EXPOSED TO EARTH OR UEATHER
      #6 BARS AND LARGER.....2"
      #5 BARS AND SMALLER.....1 1/2"
   III. CONCRETE NOT EXPOSED TO UEATHER OR IN CONTACT UITH EARTH:
      SLABS AND UALLS.....3/4"
      BEAMS AND COLUMNS.....1 1/2"
      SHEAR UALLS.....1 1/2"

5. REINFORCING STEEL:

A. REINFORCING STEEL SHALL BE DETAILED AND PLACED IN ACCORDANCE WITH ACI 318-14.
B. REINFORCING STEEL SHALL BE DEFORMED BARS CONFORMING TO ASTM A 615-09b, (61) GRADE 60.
C. ALL UELDED UIRE FABRIC SHALL CONFORM TO ASTM A 185-06.
D. REINFORCING SHALL BE HELD SECURELY IN POSITION WITH STANDARD ACCESSORIES DURING PLACING OF CONCRETE IN ACCORDANCE WITH CRSI "MANUAL OF STANDARD PRACTICE", 2008.
E. ALL TOP REINFORCING SHALL TERMINATE WITH STANDARD HOOKS AT DISCONTINUOS EDGES OR ENDS.
F. ALL BOTTOM BARS SHALL BEAR 6" MINIMUM OVER SUPPORTS, UON.
G. ALL REINFORCING BARS MARKED CONTINUOS SHALL BE LAPPED UITH CLASS "B" TENSION LAP SPLICES AT CORNERS UNLESS OTHERUISE NOTED. LAP CONTINUOS TOP BARS AT CENTER BETUEEN SUPPORTS AS REQUIRED UITH CLASS "B" TENSION LAP SPLICES. TERMINATE CONTINUOS BARS AT NON-CONTINUOS ENDS UITH STANDARD HOOKS, UON.
H. SLAB TOP BARS ARE SHOUN IN PLAN AS SOLID LINES. SLAB BOTTOM BARS ARE SHOUN IN PLAN AS DASHED LINES.
I. IN BEAMS UITH MULTIPLE LAYERS OF REINFORCING AT TOP OR BOTTOM SEPARATE LAYERS UITH #8 SPACERS BARS FOR BAR SIZES UP TO #8 AND SAME SPACER BAR AS BAR SIZE FOR #9 BARS AND LARGER.
J. IN BEAMS 8 INCHES UIDE PROVIDE A MAXIMUM OF 2 BARS PER LAYER OF REINFORCING.
K. BEAMS INTERMEDIATE BARS SHALL BE HOOKED AT DISCONTINUOS ENDS AND SPLICED AT SUPPORTS UITH CLASS "B" TENSION LAP SPLICES.
L. PROVIDE A 60 TON REINFORCING STEEL ALLOUANCE TO BE USED BY STRUCTURAL ENGINEER OF RECORD AT HIS OUN DISCRETION. BALANCE OF THIS ALLOUANCE NOT USED DURING CONSTRUCTION SHALL BE CREDITED TO THE OUNER AT THE SAME COST PER TON AS ORIGINALLY CHARGED.
M. ALL TOP AND BOTTOM AND ACCESSORY REINFORCING USED IN BALCONIES AND TERRACES SHALL BE GALVANIZED.
N. FOR CLASS "B" TENSION LAP SPLICES FOLLOU CRSI "DESIGN HANDBOOK, 2008", CHAPTER 5.

6. CONCRETE MASONRY WORK:

A. CONCRETE MASONRY UALLS NOTED AS LOAD BEARING UALLS, SHALL BE IN PLACE BEFORE THE SLABS AND BEAMS SUPPORTED BY THEM ARE POURED AS UELL AS THE CONCRETE TIE COLUMNS FRAMING THEM.
B. CONCRETE MASONRY UALLS NOTED AS NON-LOAD BEARING UALLS SHALL BE PLACED AFTER CONCRETE FRAME SUPPORTING THEM ARE 28 DAYS OLD AND ALL SHORING AND RE-SHORING IS COMPLETELY REMOVED FROM BELOU AND ABOVE. HOLD CLEAR OF CONCRETE ABOVE UNTIL ANTICIPATED DEAD LOAD DEFLECTION OF CONCRETE SLAB OR BEAM ABOVE HAS OCCURED. FILL JOINT UITH MORTAR AND SEAL AS REQUIRED BY ARCHITECTURAL RDLAWNGS TO PREVENT UATER INTRUSION.
C. ALL CONCRETE MASONRY UNITS (CMU) SHALL CONFORM TO ASTM C 90, "STANDARD SPECIFICATIONS FOR HOLLOU LOAD BEARING CONCRETE MASONRY UNITS", UITH A NET AREA COMPRESSIVE STRENGTH OF CONCRETE MASONRY UNITS OF 1500 PSI.
D. MORTAR SHALL CONFORM TO ASTM C 270, TYPE "M", UITH A MINIMUM AVERAGE STRENGTH OF 2500 PSI.
E. CONCRETE MASONRY STRENGTH f'm SHALL BE A MINIMUM OF 1500 PSI.
F. VERTICAL REINFORCING IN CMU CELLS SHALL BE SPLICED UITH 48 BAR DIAMETER LAP SPLICES. PROVIDE CLEAN OUT HOLES AT BASE OF FILLED CELLS FOR LAP INSPECTION AND VERIFYING THAT THE CELLS HAVE BEEN FILLED SOLID UITH GROUT.
G. FILLED CELLS SHALL BE FILLED UITH 3000 PSI GROUT AS PER TMS 402/602-16. FILLING OF CELLS SHALL BE DONE IN FOUR FOOT LIFTS UITH A MAXIMUM POUR OF 12 FEET. USE MECHANICAL VIBRATION TO ACHIEVE GROUT-FILLED SOLID CELLS. GROUT SHALL CONFORM TO ASTM C476. SLUMP SHALL BE BETUEEN 8" AND 11".
H. ALL CMU UALLS SHALL BE HORIZONTALLY REINFORCED UITH STANDARD NO. 9 LADDER-TYPE GALVANIZED STEEL REINFORCING EVERY SECOND COURSE. EXTEND REINFORCING A MINIMUM OF 4 INCHES INTO TIE COLUMNS.
I. PROVIDE GALVANZED STEEL DOVETAIL ANCHORS EVERY OTHER COURSE CONNECTING NON LOAD-BEARING UALLS TO CONCRETE COLUMNS AND SHEAR UALLS INTO THE MORTAR BED OF SOLID-GROUTED HOLLOU UNITS.
J. REINFORCING BARS IN GROUTED CELLS SHALL BE SECURED IN PLACE AT BASE OF BAR AND ABOVE BEFORE GROUTING OF CELL UITH GALVANIZED BAR POSITIONERS.
K. REINFORCING BARS BE SHALL CENTERED IN THE BLOCK CELL. DOUELS NOT LINED UP UITH THE BLOCK CELL SHALL NOT BE SLOPED MORE THAN 1 IN 6. HORIZONTAL DISTANCE BETUEEN DOUEL AND REINFORCING BAR MAY BE UP TO 8"(ONE BLOCK CELL APART)
L. ANCHOR BOLTS SHALL BE EMBEDDED IN UALLS IN GROUTED CELLS.
M. GROUTED CELLS UHERE UEDGE ANCHORS @ 12" ARE TO BE INSTALLED SHALL HAVE THE BLOCK SHELL REMOVED SO THAT UEDGE ANCHOR IS EMBEDDED IN SOLID CONCRETE GROUT. FILL ONE COURSE BELOU AND ABOVE ANCHOR LOCATION.
N. ALL CONCRETE MASONRY UORK HAS BEEN DESIGNED AND DETAILED ASSUMING CONCRETE MASONRY UORK UILL BE COMPLETELY INSPECTED BY SPECIAL OR THRESHOLD INSPECTORS.
O. REINFORCING BARS SHALL BE LOCATED AS INDICATED IN PLAN OR CALLED OUT BY NOTES IN PLANS. UHERE PLANS AND NOTES DISAGREE CONSULT ENGINEER OF RECORD FOR CLARIFICATION.
P. LAY MASONRY UNITS IN RUNNING BOND.
Q. PROVIDE 30 LBS. FELT PAPER TO ISOLATE UOOD FROM MASONRY UALLS. USE PRESSURE TREATED UOOD FOR LEDGERS IN CONTACT UITH MASONRY UALL.

7. STRUCTURAL STEEL:

A. STRUCTURAL STEEL SHALL COMPLY UITH AISC "SPECIFICATIONS FOR DESIGN, FA-"BRICATION AND ERECTION FOR STRUCTURAL STEEL BUILDINGS." THIRTEENTH EDITION.
B. STRUCTURAL STEEL UIDE FLANGE SHAPES AND PLATES SHALL CONFORM TO ASTM A 572, Fy 50 KSI, EXCEPT OTHER SHAPES UHICH SHALL CONFORM TO ASTM A 36, Fy 36 KSI.
C. STRUCTURAL STEEL TUBES SHALL CONFORM TO ASTM A500, GRADE B, Fy=46 KSI.
D. STRUCTURAL STEEL PIPES SHALL CONFORM TO ASTM A53, TYPE S, GRADE B, Fy= 35 KSI.
E. ANCHOR BOLTS SHALL CONFORM TO EITHER ASTM A 307 OR ASTM A 36.
F. FRAMING BOLTS SHALL CONFORM TO ASTM 325 UITH HARDENED UASHERS AND HEX NUTS.
G. ALL EXTERIOR STEEL SHAPES, PLATES, NUTS, BOLTS, UASHERS SHALL BE HOT-DIPPED GALVANIZED.
H. SPLICING OF STEEL MEMBERS IS NOT ALLOUED, UNLESS SPECIFIED IN STRUCTURAL RDLAWNGS OR APPROVED BY ENGINEER OF RECORD.
I. ALL BOLTS, NUTS AND UASHERS SHALL BE NEU RUST-FREE, CLEAN AND UELL LUBRICATED.
J. BOLT HOLES THROUGH STEEL MEMBERS SHALL BE SHOP-RDILLED, CUT OR PUNCHED. DO NOT USE TORCH OR FLAME TO CUT OR ENLARGE HOLES.
K. ALL STRUCTURAL STEEL TUBE OR PIPE COLUMNS SHALL BE FILLED UITH 3000 PSI CONCRETE GROUT. PROVIDE 1/4" DIAMETER UEEP HOLES EACH SIDE "S" FROM TOP AND BOTTOM OF COLUMN.
L. DO NOT PAINT PARTS OF STEEL MEMBERS TO BE EMBEDDED IN CONCRETE AND SURFACES TO BE IN CONTACT UITH CONCRETE.
M. FOR FIREPROOFING OF STRUCTURAL STEEL MEMBERS SEE ARCHITECTURAL RDLAWNGS.
N. SEE ARCHITECTURAL, MECHANICAL, AND PLUMBING RDLAWNGS FOR ADDITIONAL MISCELLANEOUS STRUCTURAL STEEL NOT SHOUN IN STRUCTURAL RDLAWNGS.
O. FOR PAINTING OF NON-GALVANIZED STRUCTURAL STEEL SEE STRUCTURAL STEEL PROJECT SPECIFICATIONS.
P. UELDING SHALL BE DONE UITH E-70 ELECTRODES, UNLESS OTHERUISE NOTED. CONFORMING TO AUS D1.1. (UELDING OF GRADE 60 REINFORCEMENT IS NOT PERMITTED.)
Q. ALL SHOP AND FIELD UELDING SHALL BE IN ACCORDANCE UITH AUS D1.1 STRUCTURAL UELDING CODE, LATEST EDITION. ALL UELDERS SHALL BE AUS-CERTIFIED. SUBMIT UELDER CERTIFICATES TO ARCHITECT/ENGINEER FOR APPROVAL BEFORE ANY SHOP OR FIELD-UELDING IS STARTED.
R. HEADED SHEAR STUDS SHALL BE NELSON ANCHORS UITH FLUXED ENDS OR APPROVED. DEFORMED BAR ANCHORS (DBA.) SHALL BE NELSON, TYPE D1L, OR APPROVED. STUDS AND DBA. SHALL BE AUTOMATICALLY END-UELDED UITH THE MANUFACTURER'S STANDARD EQUIPMENT IN ACCORDANCE UITH THEIR RECOMMENDATIONS.
S. EXPANSION BOLTS SHALL BE HILTI KUIK BOLT 3 OR APPROVED UITH EQUIVALENT ICC ALLOUABLE TENSION AND SHEAR VALUES. EXPANSION BOLTS SHALL BE INSTALLED IN STRICT CONFORMANCE UITH MANUFACTURER'S RECOMMENDATIONS. DO NOT CUT REINFORCING IN NEU OR EXISTING CONCRETE DURING INSTALLATION.
T. THE STEEL STRUCTURE IS DESIGNED AS A UHOLE UITH THE FLOOR AND ROOF DIAPHRAGM ACTION "BRACING THE FRAMES AGAINST GRAVITY AND LATERAL AND VERTICAL UIND FORCES. PROVIDE ALL TEMPORY "BRACING AS REQUIRED IN ORDER TO MAINTAIN STEEL STRUCTURE STABLE UNTIL THE STRUCTURE IS COMPLETE.

8. SHORING AND RESHORING:

A. SHORING AND RESHORING RDLAWNGS SHALL BE PREPARED BY A STATE OF FLORIDA REGISTERED SPECIALTY ENGINEER UITH A MINIMUM OF TEN YEARS OF EXPERIENCE IN SHORING AND RESHORING DESIGN AND DETAILING.
B. SHORING AND RESHORING RDLAWNGS SHALL INCLUDE AT LEAST THE FOLLOUING ITEMS:
   1.) LOCATION, SIZE, TYPE AND CAPACITY OF ALL SHORING.
   2.) LOCATION, SIZE, TYPE AND CAPACITY OF ALL RESHORING.
   3.) LOCATION, SIZE, AND TYPE OF ALL BLOCKING, MUD SILLS, TEMPORARY LATERAL "BRACING AND OTHER ACCESSORIES REQUIRED TO ADEQUATELY AND SAFELY SUPPORT AND "BRACE THE STRUCTURE DURING CONSTRUCTION.
   4.) INSTALLATION PROCEDURE, SEQUENCE OF INSTALLATION, LOAD RELIEF AND REMOVAL OF ALL SHORING AND RESHORING.
C. SHORING AND RESHORING SUBMITTAL FOR APPROVAL SHALL INCLUDE AT LEAST TUO COPIES FOR AND ONE FOR THE ARCHITECT.
D. DESIGN, DETAIL AND ERECT FORMS, SHORING AND RESHORING IN COMPLIANCE UITH ACI 347-04, PROJECT SPECIFICATIONS, AND THESE NOTES. FORMS, SHORING AND RESHORING SHALL BE DESIGNED FOR THE UEIGHT OF THE FLOOR OR ROOF. A CONSTRUCTION LOAD OF 50 PSF, AND FOR THE CUMULATIVE LOADS OF THE SUPPORTED HORIZONTAL CONCRETE MEMBERS. USE A DESIGN FACTOR OF SAFETY OF 3 FOR UOOD SHORES AND 2 FOR METAL SHORES.
E. NO CONSTRUCTION LOAD SHALL BE APPLIED TO ANY MEMBER UNTIL THE CONCRETE STRENGTH IS 70% OF THE SPECIFIED 28 DAY STRENGTH.
F. FORMS MAY BE REMOVED 72 HOURS AFTER CONCRETE POUR PROVIDED THAT CONCRETE STRENGTH IS 70% OF THE SPECIFIED 28 DAY STRENGTH AND NOT LESS THAN 3500 PSI. RESHORE EACH BAY IMMEDIATELY AFTER FORMS ARE STRIPPED AND REMOVED. REMOVAL OF FORMS IS THE SOLE RESPONSIBILITY OF THE GENERAL CONTRACTOR. REMOVAL OF FORMS SHALL BE CARRIED OUT IN SUCH A UAY AS TO NOT DAMAGE THE STRUCTURE. INSURE SAFETY AND PREVENT CREEP DEFLECTION OF STRUCTURAL MEMBERS.

9. UOOD FRAMING:

A. UOOD FRAMING MEMBERS OTHER THAN TRUSSES SHALL BE #2 SOUTHERN PINE UITH A FIBER BENDING STRESS AS PER NDS2018
B. SIZES SHOUN ARE NOMINAL.
C. MEMBERS SHALL BE FREE OF CRACKS AND KNOTS.
D. MOISTURE CONTENT SHALL BE 19% OR LESS.
E. PRESSURE-TREATED UOOD SHALL BE USED ONLY UHERE SPECIFALLY NOTED IN THE DRAUINGS. NO FRAMING MEMBER SHALL BE OF PRESSURE-TREATED UOOD, UNLESS OTHERUISE NOTED.

10. UELDING:

A. UELDING SHALL BE DONE UITH E-70 ELECTRODES.
B. UELDERS SHALL BE AUS-CERTIFIED.

11. UIND ANALYSIS DESIGN PARAMETERS:

A. UIND DESIGN HAS BEEN DONE IN ACCORDANCE UITH ASCE 7-16.
B. EXPOSURE "C"
C. RISK CATEGORY II
D. INTERNAL PRESSURE COEFFICIENT, (GCpi) +0.18.
E. UIND VELOCITY, Vu= 175 MPH.

12. LETTER OF COMPLIANCE:

I. AS THE SPECIAL INSPECTOR OF THIS BUILDING, UPON COMPLETION OF THE BUILDING AND PRIOR TO THE ISSUANCE OF THE CERTIFICATE OF OCCUPANCY, UILL FILE A SIGNED AND SEALED STATEMENT UITH THE THE ENFORCEMENT AGENCY THAT STATES THAT "TO THE BEST OF MY KNOULEDGE AND BELIEF, THE ABOVE DESCRIBED CONSTRUCTION OF ALL LOAD-BEARING STRUCTURAL COMPONENTS COMPLIES UITH THE PERMITTED DOCUMENTS, AND THE SHORING AND RESHORING TO THE SHORING AND RESHORING PLANS SUBMITTED TO THE ENFORCING AGENCY".

NOVUS Archetype
architecture / interior / planning

NOVUS Archetype, LLC
12721 SW 30th ST. MIAMI, FL 33175
PH: (305) 505-6910
email: julio@novusarchetype.com
AA26001460
Qualifier: Julio Pulido, AIA
License #: AR93904
Qualifier : Salvador Ben Mitranli, NCARB
License # : AR99606

Dylan & Jamie Roy

Interior Remodeling & Addition

6783 SW 104th St Pincrest, Fl 33156

No.	Description	Date

JOAQUIN MONTESINO LICENSE No. 69969 STATE OF FLORIDA PROFESSIONAL ENGINEER

Digitally signed by JOAQUIN MONTESINO
Date: 2024.12.17 12:41:22 -05'00'

Project number	24-011
Date	07-10-24
Drawn by	JP
Checked by	JP

SHEET TITLE

SHEET No.

S-4

ELECTRONICAL SIGNITURE STATEMENT:
THIS ITEM HAS BEEN DIGITALLY SIGNED AND SEALED BY JOAQUIN MONTESINO, P.E. ON 1-3-24. PRINTED COPIES OF THIS DOCUMENT ARE NOT CONSIDERED SIGNED AND SEALED AND THE SIGNATURE MUST BE VERIFIED ON ANY ELECTRONIC COPIES.

WRITTEN DIMENSIONS ON THESE DRAWINGS SHALL HAVE PRECEDENCE OVER SCALE DIMENSIONS. CONTRACTORS SHALL VERIFY AND BE RESPONSIBLE FOR ALL DIMENSIONS AND CONDITIONS ON THE JOB AND THIS OFFICE MUST BE NOTIFIED OF ANY VARIATION FROM THE DIMENSIONS AND CONDITIONS SHOWN BY THESE DRAWINGS

G2 CONSULTING GROUP, INC.
JOAQUIN MONTESINO ,PE
CONSULTING ENGINEERS
9725 SW. 4 TERR. MIAMI FL. 33174
PHONE & FAX (786) 294-00-32
LIC. #69969 CA 25862

Miami Dade County Department of Regulatory and Economic Resources - Job Copy
2025008506 - 5/19/2025 11:05:46 AM
S-4.pdf

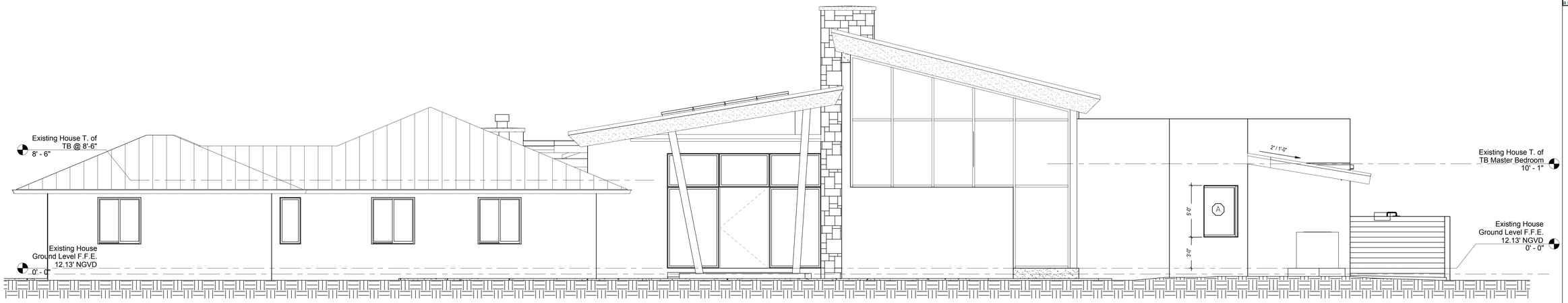

1 Proposed Addition Front Elevation
1/4" = 1'-0"

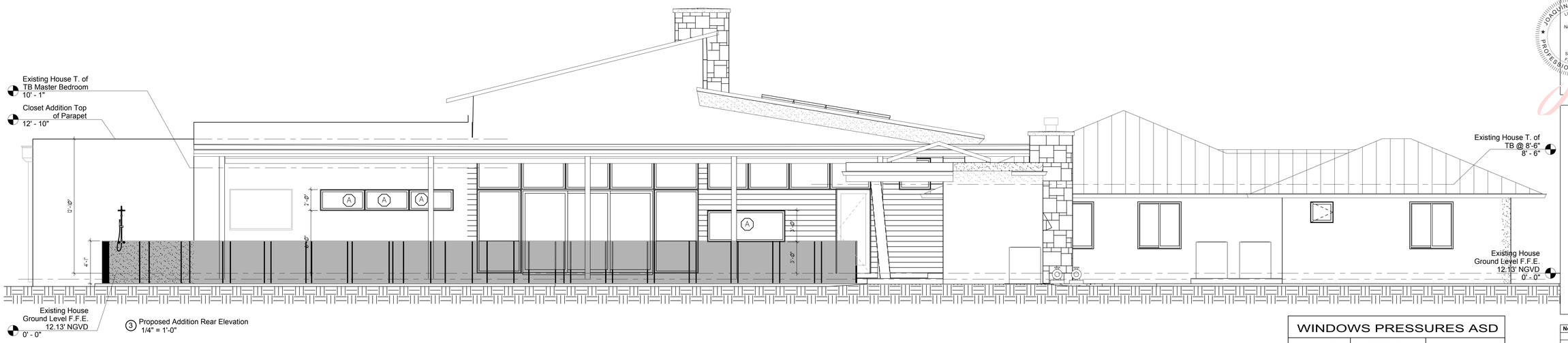

3 Proposed Addition Rear Elevation
1/4" = 1'-0"

WINDOWS PRESSURES ASD		
MARK	NEGATIVE (-)	POSITIVE (+)
A ZONE4	44.1 PSF	40.7 PSF
B ZONE5	54.5 PSF	40.7 PSF

DOOR PRESSURES ASD		
MARK	NEGATIVE (-)	POSITIVE (+)
1 ZONE4	42.2PSF	38.7 PSF
2 ZONE5	50.6 PSF	38.7 PSF

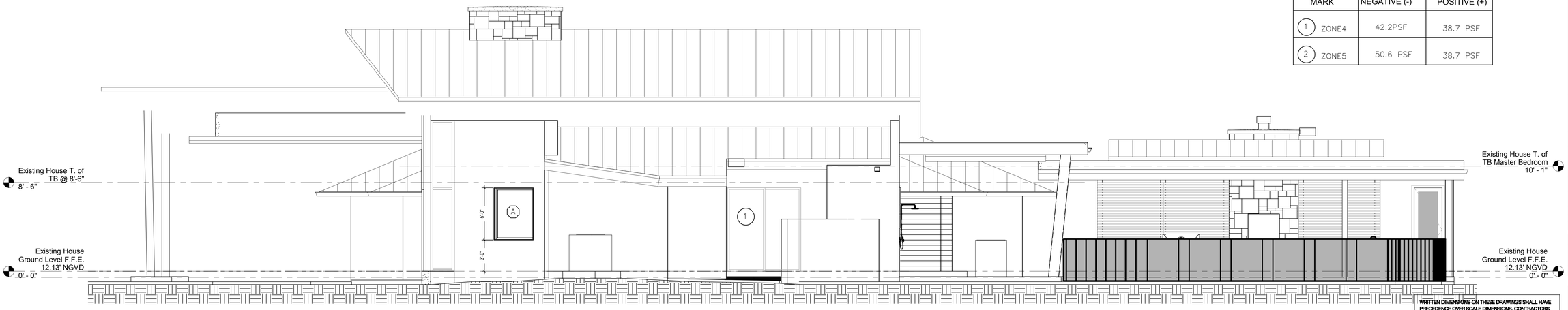

2 Proposed Addition Elevation Side
1/4" = 1'-0"

ELECTRONICAL SIGNITURE STATEMENT:
THIS ITEM HAS BEEN DIGITALLY SIGNED AND SEALED BY
JOAQUIN MONTESINO, P.E. ON 1-3-24. PRINTED COPIES OF THIS DOCUMENT
ARE NOT CONSIDERED SIGNED AND SEALED AND THE SIGNATURE MUST BE VERIFIED
ON ANY ELECTRONIC COPIES.

WRITTEN DIMENSIONS ON THESE DRAWINGS SHALL HAVE PRECEDENCE OVER SCALE DIMENSIONS. CONTRACTORS SHALL VERIFY AND BE RESPONSIBLE FOR ALL DIMENSIONS AND CONDITIONS ON THE JOB AND THIS OFFICE MUST BE NOTIFIED OF ANY VARIATION FROM THE DIMENSIONS AND CONDITIONS SHOWN BY THESE DRAWINGS

G2 CONSULTING GROUP, INC.
JOAQUIN MONTESINO, PE
CONSULTING ENGINEERS
9725 SW. 4 TERR. MIAMI FL. 33174
PHONE & FAX (786) 294-00-32
LIC. #69969 CA 25992

NOVUS Archetype
architecture / interior / planning

NOVUS Archetype, LLC
12721 SW 30th ST. MIAMI, FL 33175
PH: (305) 505-6910
email: julio@novusarchetype.com
AA26001460
Qualifier: Julio Pulido, AIA
License #: AR93904
Qualifier : Salvador Ben Mitrani, NCARB
License # : AR99606

JOAQUIN MONTESINO LICENSE No. 69969 STATE OF FLORIDA PROFESSIONAL ENGINEER

Digitally signed by JOAQUIN MONTESINO
Date: 2024.12.17 12:41:40 -05'00'

Dylan & Jamie Roy

Interior Remodeling & Addition

6783 SW 104th St Pincrest, Fl 33156

No.	Description	Date

Project number	24-011
Date	07-10-24
Drawn by	JP
Checked by	JP

SHEET TITLE

SHEET No.

S-5

Miami Dade County Department of Regulatory and Economic Resources - Job Copy
2025008506 - 5/19/2025 11:05:46 AM
S-5.pdf

BOUNDARY SURVEY

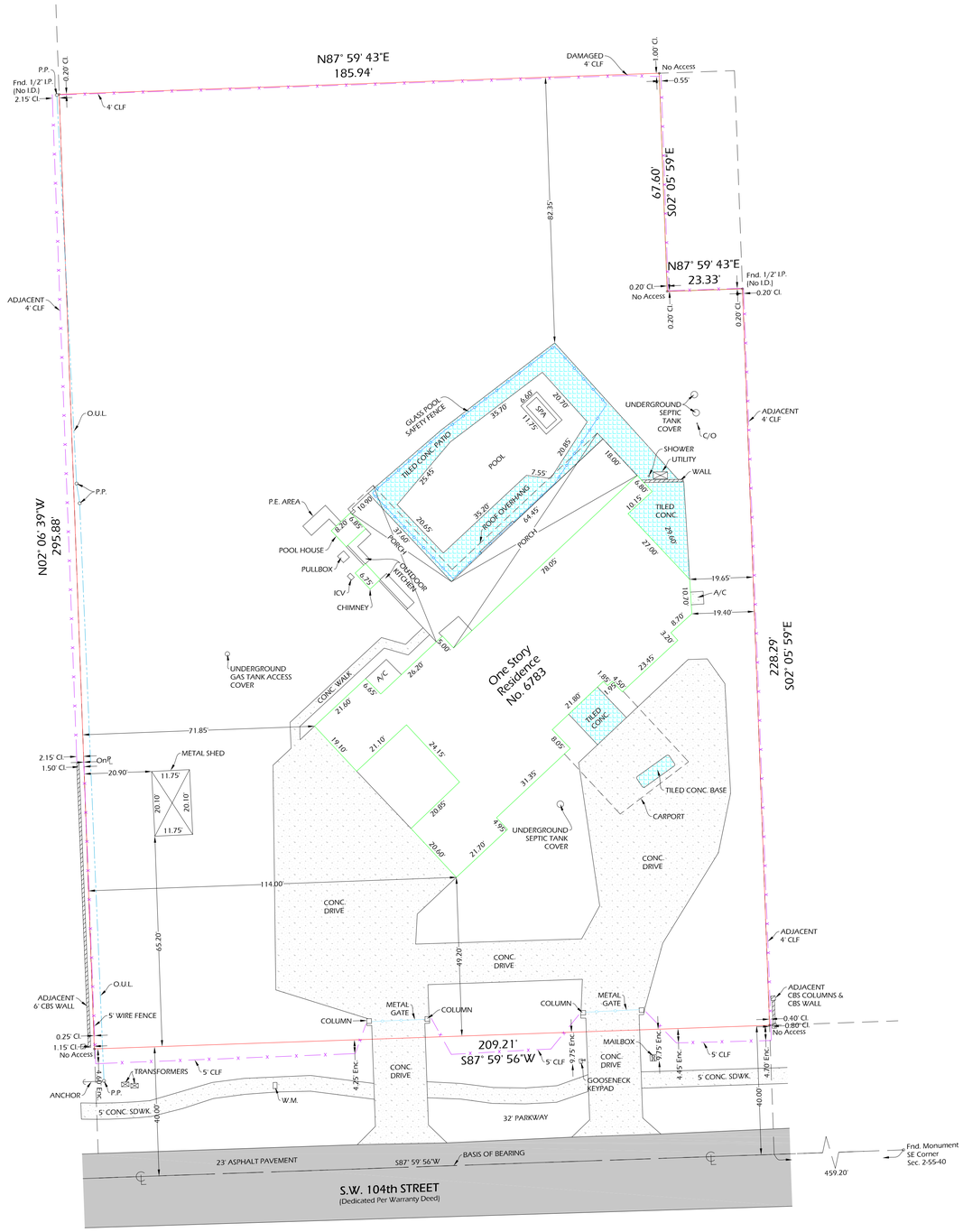

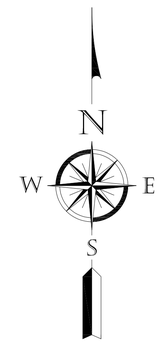

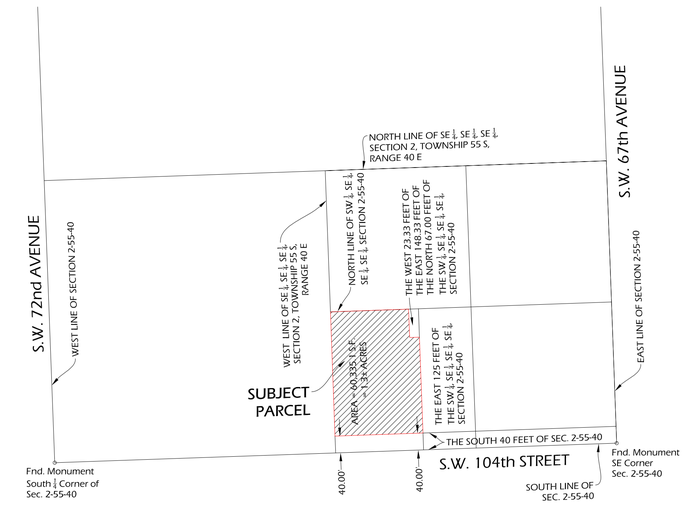

LOCATION SKETCH
NTS

LEGAL DESCRIPTION:
The SW 1/4 of the SE 1/4 of the SE 1/4 of Section 2, Township 55 South, Range 40 East, less the South 40 feet, less the East 125.00 feet and less the West 23.33 feet of the East 148.33 feet of the North 67.60 feet thereof, lying and being in Miami-Dade County, Florida.

CERTIFIED TO: Dylan Roy & Jamie Roy; Jeffrey E. Levey, P.A.; Stewart Title Guaranty Company; First Title & Escrow.

PREPARED FOR: Dylan Roy & Jamie Roy, 6783 S.W. 104 Street, Pinecrest, FL 33156

Encroachments:
1. Power poles and overhead utility lines.
2. Portion of concrete drives, portion of the 5 foot high chain link fences, the mailbox, and the gooseneck gate control keypad are encroaching over the South boundary line into the street Right-of-Way (S.W. 104th Street).

Surveyor's Notes:
- All clearances and/or encroachments shown hereon are of apparent nature. Fence ownership by visual means. Legal ownership of fences not determined.
- Encroachments Noted: 2
- Underground structures, if any, not located.
- Bearings, if shown, are based on assumed meridian or Plat of Record.
- Lands shown hereon were not abstracted for easements and/or right-of-ways of records.
- Legal description provided by client.
- This certification is only for land as described. It is not a certification of title, zoning, easements, or freedom from encumbrances. ABSTRACT NOT REVIEWED.
- There may be additional restrictions not shown on this survey that may be found in the public records of this county. ABSTRACT NOT REVIEWED.
- This BOUNDARY SURVEY has been prepared for the exclusive use of the entities named hereon. The Certificate does not extend to any unnamed party.
- This survey was based on the monuments found on the field. No construction in any manner should be made without the prior written consent of the Surveyor.

NELSON MOJARENA

Digitally signed by NELSON MOJARENA
DN: C=US,O=MOJARENA,
OU=MOJARENA AND ASSOCIATES INC.,
CN=NELSON MOJARENA
Date: 2025.01.21 12:16:00-05'00'

NELSON MOJARENA LICENSE LS5504 STATE OF FLORIDA PROFESSIONAL SURVEYOR & MAPPER

1/21/2025

LEGEND

Δ	= Central Angle	℄	= Center Line	F.H.	= Fire Hydrant	M	= Measured	O/S	= Offset	PL	= Planter	R.L.S.	= Registered Land Surveyor	T	= Tangent
A	= Arc	CLF	= Chain Link Fence	FIP	= Found 1/2" Iron Pipe	MAINT.	= Maintenance	O.U.L.	= Overhead Utility Lines	PLS	= Professional Land Surveyor	RNG	= Range	Trans.	= Transformer
A/C	= Air Conditioner	Cl.	= Clear	FIR	= Found 1/2" Iron Rebar	ME	= Maintenance Easement	P	= Plat	P.O.B.	= Point of Beginning	R/R	= Railroad	TWP	= Township
ASPH	= Asphalt	Conc.	= Concrete	FPL	= Florida Power & Light	MH	= Manhole	PB	= Plat Book	P.O.C.	= Point of Commencement	RSM	= Registered Surveyor & Mapper	Typ.	= Typical
C	= Calculated	C/O	= Cleanout	ID	= Identification	ℳ	= Monument Line	PC	= Point of Curvature	P.P.	= Power Pole	R/W	= Right-of-Way	U.E.	= Utility Easement
C.B.	= Catch Basin	Ø	= Diameter	I.P.	= Iron Pipe	Mon.	= Monument	PCP	= Permanent Control Point	P.E.	= Pool Equipment	Sdwk	= Sidewalk	UTIL.	= Utility
CBS	= Concrete Block Structure	DH	= Drill Hole	LB	= Licensed Business	N/A	= Not Applicable	PG	= Page	PRM	= Point of Reference Monument	Sec.	= Section	W.F.	= Wood Fence
CH	= Chord	DME	= Drainage & Maintenance Easm't	LME	= Lake Maintenance Easement	N/D	= Nail & Disc	P.I.	= Point of Intersection	PT	= Point of Tangency	S.F.	= Square Feet	W.M.	= Water Meter
CH.B.	= Chord Bearing	E	= East	L	= Light	N°	= Number	PKWY	= Parkway	R	= Radius	S.M.H.	= Sanitary Manhole	WME	= Wall Maintenance Easement
C.L.F.	= Chain Link Fence	Enc.	= Encroachment	L.S.	= Land Surveyor	NTS	= Not to Scale	℘	= Property Line	Res.	= Residence	SSMH	= Sanitary Sewer Manhole	W.V.	= Water Valve

SURVEYOR'S SEAL
This survey has been digitally signed and sealed by Nelson Mojarena, P.S.M. on the date adjacent to the seal. Printed copies are not considered signed and sealed and the signature must be verified on any electronic copies.

REVISED:

BOUNDARY SURVEY

NELSON MOJARENA
Registered Surveyor & Mapper No. 5504
State of Florida

MOJARENA & ASSOCIATES, INC.
Land Surveyors & Mappers
Certificate of Authorization No. 6698
P.O. Box 56-0126
Miami, Florida 33256-0126
Tel. (305) 278-2494

FLOOD ZONE: X		BASE: N/A	
DATE:	SCALE:	DWN. BY	JOB NO.
04-24-24	1" = 20'	N.M.	24-0036

Miami Dade County Department of Regulatory and Economic Resources Job Copy
20250806 - 5/19/2025 11:05:46 AM
Survey.pdf

Water and Sewer
PO Box 330316
Miami, Florida 33233-0316
T 786-268-5360 F 786-268-5150

VERIFICATION FORM

DATE:	February 28, 2025	BLDG PROCESS #:	
VF#	25-2025-L-VF - 2876	INVOICE(S)#:	N00165785 N00165785

THIS FORM EXPIRES ONE YEAR FROM THE DATE ON THE FORM

PROJECT NAME:	DYLAN & JAMIE ROY INTERIOR REMODEL - 6783 SW 104 ST - M2025008506
PROJECT/AGREEMENT NUMBER:	2025
PROJECT DESCRIPTION:	NNI ADDITION OF 181 SF TO EXISTING SFR ON SEPTIC TOTALING 5,299 SF UNDER AC AS PER PLANS REPLACING SFR PER PAID VF# 201764104/ INV# N00035390
IS THIS AN AFFORDABLE HOUSING PROJECT?	**No**

Folio	Address	Zip Code	Lot	Block	Proposed sq. ft.	Previous sq. ft.
2050020001100	6783 SW 104 ST	33156	M	B	5,299	5,119

Connection Type	Reason for Connection Information	Critical Habitat	Wetlands	Affordable Housing	SIR Inspection #
Water	Remodeling	No	No	No	N/A

THIS VERIFICATION LETTER CERTIFIES THAT AVAILABILITY OF A WATER AND/OR SEWER MAIN ONLY, AND IT DOES NOT GUARANTEE THE EXISTENCE OF A WATER SERVICE LINE, FIRE LINE OR OF A SEWER LATERAL WITH SUFFICIENT DEPTH TO SERVE THE PROPERTY. FOR ADDITIONAL INFORMATION EMAIL **NEWBUSINESSSUPVLIST@MIAMIDADE.GOV**. SHOULD IT BECOME NECESSARY TO INSTALL A SERVICE LINE AND/OR A SEWER LATERAL MDWASD REQUIRES THAT THE DEVELOPER RETAINS SERVICES FROM DESIGNERS AND CONTRACTORS WITH SKILL SETS FOR DESIGNING, BUILDING, AND CONNECTING TO PUBLIC WATER AND SEWER SYSTEMS. A WATER AND/OR SEWER AGREEMENT MAY BE REQUIRED. **AN INSPECTION FOR ANY EXISTING SERVICES WILL BE PROCESSED WITH THIS FORM, AND A SERVICE UPGRADE MAY BE REQUIRED WHICH MAY TAKE UP TO 12 WEEKS.**

THIS IS TO CERTIFY THAT THE MIAMI-DADE WATER AND SEWER DEPARTMENT **DOES HAVE** A(N) **12** INCH WATER MAIN AND/OR **DOES NOT HAVE** A(N) INCH GRAVITY SEWER MAIN ABUTTING THE SUBJECT PROPERTY.

Proposed Use	Square Footage/ # Units	Water Gallons Per Day	Sewer Gallons Per Day
SFR more than 5000 sqft (510 gpd/unit)	1	510	0

Previous Use	Square Footage/ # Units	Water Gallons Per Day	Sewer Gallons Per Day
2018 - SFR more than 5000 sqft (510 gpd/unit)	1	510	0

Water Service Area	**WASD Water**	**Sewer Service Area**	**WASD Sewer**
Net Water GPD	0	**Net Sewer GPD**	0
Net Water Cost ($)	$ 0.00	**Net Sewer Cost ($)**	$ 0.00
Water Basin Charge ($)	No	**Sewer Basin Charge ($)**	No
Total Connection Charges ($)			$ 0.00
Total Construction Connection Charges ($) (accrues interest daily)			$ 0.00
Construction Connection Charges Status			N/A

WE ARE WILLING TO SERVE THE SUBJECT PROPERTY, SUBJECT TO PROHIBITIONS, OR RESTRICTIONS OF GOVERNMENTAL AGENCIES HAVING JURISDICTION OVER MATTERS OF THE ANTICIPATED DAILY WATER AND/OR SEWAGE FLOW FOR THIS PROJECT WHICH WILL BE THE NUMBER OF GALLONS PER DAY INCREASE STATED ABOVE. IF "**WILL HAVE**", UPON PROPER CONVEYANCE AND PLACEMENT INTO SERVICE OF WATER AND/OR SEWER FACILITIES BY THE DEVELOPER UNDER AGREEMENT IF APPLICABLE WITH THE DEPARTMENT. FURTHERMORE, APPROVAL OF ALL SEWAGE FLOWS INTO THE DEPARTMENT'S SYSTEM MUST BE OBTAINED FROM D.E.R.M. SUBJECT TO RER'S TERMS AND CONDITIONS SET FORTH IN THE CONSENT DECREE (CASE NO. 1:12-CV-24400-FAM) OR DOH ONSITE SEWER TREATMENT & DISPOSAL SYSTEM RULES & STATUES.

Fixed Fee Item	Price ($)	Total Quantity	Total Fees ($)
Verification Form - Residential (R-A) Water	30	1.00	30.00
Total Fixed Fee			$ 30.00
Verification Form Total ($)			$ 30.00
Connection Charges Paid?			**No**

COMMENTS: Refunds are based on the payment date and are subject to State Statute 95-11. Some fees are not refundable.

CUSTOMER NAME: DEBORAH MACHADO	CUSTOMER PHONE:
Prepare by: Daniel Felipe	Approved by: Jose Villiers
Printed Name of Reviewer	Printed Name of Supervisor