THE CONTENTS OF THIS DOCUMENT, ITS DESIGNS AND DRAWINGS ARE THE COPYRIGHTED PROPERTY OF DE LA LLAMA + ASSOCIATES INC. AND MAY NOT BE REPRODUCED IN WHOLE OR IN PART WITHOUT THE EXPRESSED WRITTEN CONSENT OF DE LA LLAMA + ASSOCIATES, INC.
THE GENERAL CONTRACTOR AND ALL TRADES PERFORMING WORK ON THIS PROJECT SHALL BE EXCLUSIVELY RESPONSIBLE FOR VERIFYING ALL DIMENSIONS AND CONDITIONS WITH REPORTING ANY DISCREPANCIES TO THE DE LA LLAMA + ASSOCIATES, INC. BEFORE COMMENCING ANY WORK.

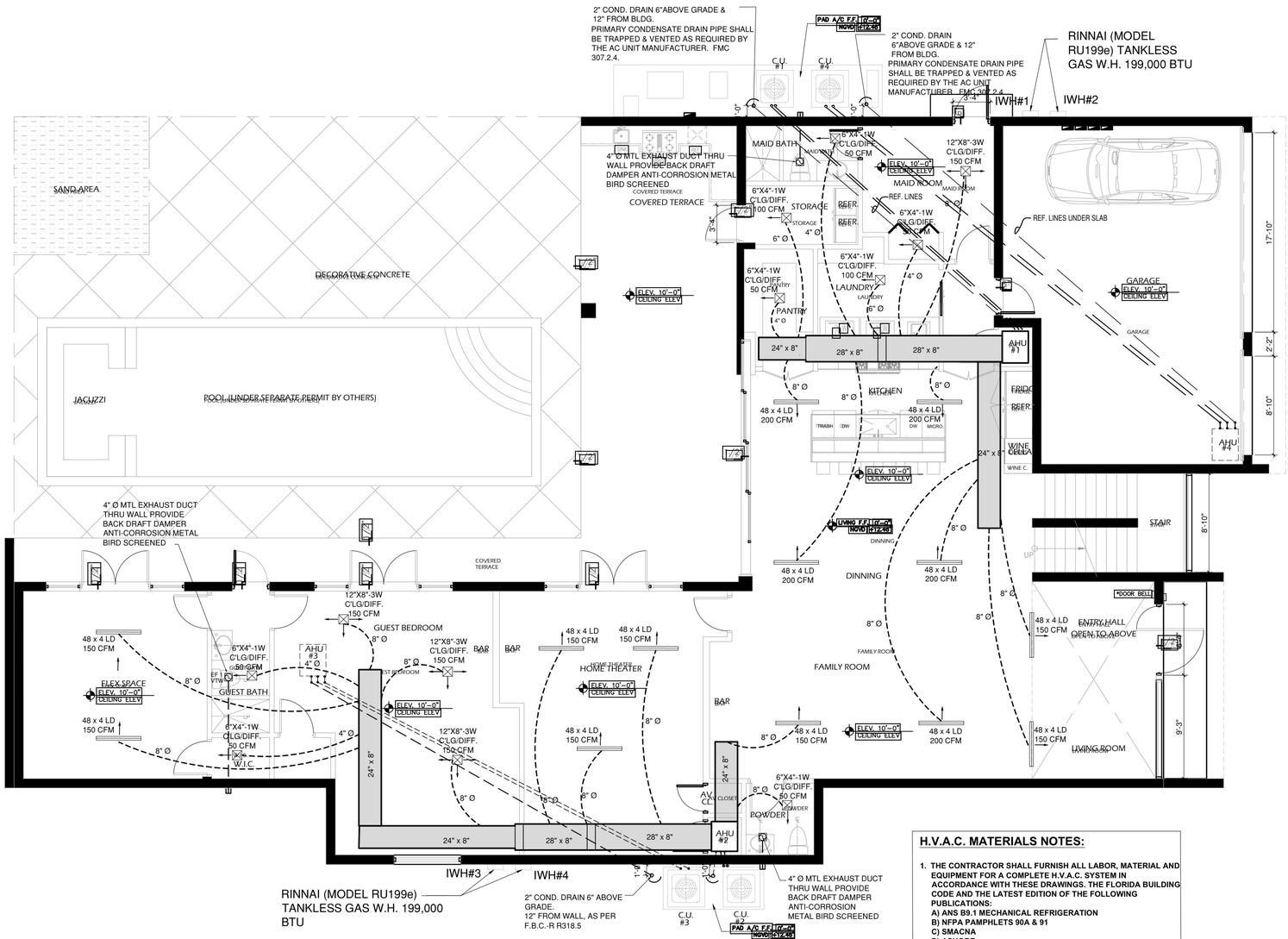

MECHANICAL GROUND FLOOR PLAN

SCALE: 3/16" =1'-0"

AIR CONDITIONING GENERAL NOTES

1. SCOPE OF WORK:

A. INSTALL A COMPLETE NEW HVAC SYSTEM AS SHOWN ON DRAWINGS.
2. EQUIPMENT SHALL HAVE CAPACITIES REQUIRED TO OBTAIN A SUITABLE OPERATING BALANCE BETWEEN ASSOCIATED ITEMS OF EQUIPMENT. ALL DAMPERS AND CONTROLS SHALL BE ADJUSTED TO OBTEIN THE REQUIRED CAPACITIES UNDER ACTUAL OPERATING CONDITIONS OF EACH ITEMS OF EQUIPMENT SHALL NOT EXCEED THE RATED MOTOR HORSEPOWER. BALANCED CAPACITIES BE EQUAL TO THOSE SCHEDULED AT DESIGN CONDITIONS.

3. COOLING SYSTEM AREA DESIGNED FOR 78F D8 INSIDE , CONDITIONS WITH OUTSIDE AIR TEMPERATURE OF 91F D.B. 79F W.B. HEATING IS DESIGNED TO MAINTAIN MINIMUM INSIDE TEMPERATURES OF 72F D.B. WITH AND OUTSIDE TEMPERATURE OF 45F D.B.

4. AIR DISTRIBUTION DEVICES SHALL BE CONSTRUCTED OF ALLUMINIUM, AS MANUFACTURED BY TITUS. CEILING DIFFUSER TO BE TITUS SERIES 200-FS, W/ OPPOSED BLADE DAMPER, AND SUPPLY AIR REGISTERS TO BE MODEL 271-FL EXPOSED GRILLAGE SHALL BE PAINTED OF SAME COLOR OF THE CEILING OR WALL IN WICH IT IS LOCATED IN AND ALL SCREWS SHALL BE OF THE COUNTERSUNK TYPE ALSO PAINTED AS GRILLAGE.

5. CONSTRUCT AIR CONDITIONING DUCTWORK FROM ONE INCH THICK FOR DUCTWORK THAT RUNS BETWEEN FLOORS AND ONE HALF INCH THICK FOR DUCTWORK THAT RUNS WITHIN ATTIC SPACE STANDARD WEIGHT, FIBROUS GLASS DUCTBOARD. FABRICATED, SEAL AND INSTALLED PER LATEST SMACNA FIBROUS GLASS DUCT MANUAL RECOMMENDATIONS. DUCT SIZES NOTED ARE CLEAR INSIDE DIMENSIONS PROVIDE ALL ELBOWS WITH DOUBLE THICKNESS TURNING VANES AT ALL BRANCH DUCT TAKE-OFFS AS REQUIRED FOR PROPER AIR BALANCING.

6. AIR COOLED CONDENSING UNITS TO BE AS SCHEDULE, OR APPROVED EQUAL PROVIDED EACH UNIT WITH ANTI- CYCLING DEVICE OR TIMER, HIGH AND LOW PRESSURE CONTROLLERS, AND FILTER DRIER.

7. FANCOIL UNIT TO BE AS SCHEDULE, OR APPROVED EQUAL COORDINATE WITH ELECTRICIAN TO CONNECT MULTI-SPEED FAN MOTOR TO PROPER SPEED TAPS TO DELIVER SCHEDULED AIR QUANTITIES, AGAINST SYSTEMS RESISTANCE AS INSTALLED DURING THE COOLING MODE; AND TO DELIVER MINIMUM SUPPLY AIR CFM, AS RECOMMENDED BY UNIT MANUFACTURER DURING THE HEATING MODE.

8. INSULATE REFRIGERANT SUCTION PIPE WITH 1:2 INCH THICK ARMAFLEX FINISH INSULATION EXPOSED TO WEATHER WITH TWO COATS OF GLASSFAB AND MASTIC. PROVIDE 3" PVC JACKET FOR ALL REFRIGERANT LINES UNDER GROUND FLOOR.

9. COORDINATE ALL WORK WITH OTHER TRADES INVOLVED, THIS INCLUDES WALL AND ROOF PENETRATIONS AND REQUIERED ELECTRICAL SERVICE AND CONTROL WIRING. PLUMBER IS TO PROVIDE A MINIMUM 1-1/4 INCH CONDENSATE TRAP SEAL AT EACH FANCOIL UNIT, PIPE TO OUTSIDE OF HOUSE 6" ABOVE FINISHED GRADE.

10. THERMOSTAT SHALL HAVE A MAXIMUM HEATING MODE TEMPERATURE SETTING OF 78F AND A MINIMUM COOLING MODE TEMPERATURE SETTING OF 70F . IT SHALL BE ADJUSTABLE TO PROVIDE A. TEMPERATURE OF UP TO 10F BETWEEN FULL HEATING AND FULL COOLING. HEATING AND COOLING TO BE NON-CONCURRENT THERMOSTAT TO HAVE REQUIRED STAGES OF COOLING AND HEATING FOR COMPATIBILITY WITH AIR CONDITIONING EQUIPMENT PROVIDE.

11. THE AIR FLOW AT EACH SUPPLY OUTLET SHOWN ARE PRELIMINARY AND FINAL FLOW AT EACH OUTLET SHALL BE DETERMINED BY DEGREE OF COMFORT TEMPERATURE.

INSTALLATION OF ALL EXTERIOR AIR CONDITIONING CONDENSING UNITS, AT GROUND LEVEL, IN SINGLE FAMILY DUPLEX AND FEE SIMPLE TOWNHOUSES IN UNINCORPORATED MIAMI-DADE COUNTY SHALL BE CONCRETE SLAB, ON THE INSIDE OF THE UNIT, WITH AN ANCHOR BOLT OF 500 POUNDS MINIMUM PULL OF CAPACITY

A/C SPLIT SYSTEM SCHEDULE

UNIT NO.	A/C # 1	A/C #2, 4	A/C # 3
TOTAL CAPACITY BTU/HR	45,000	34,600	55,000
SENS CAPACITY BTU/HR	31,200	22,200	38,200
CFM SUPPLY	1,600	1,200	2,000
HEATER KW	7.5	7.5	7.5
ESP-IN WG.	0.30	0.30	0.30
TEMP. AIR ENT. COIL DB/WB	80/67	80/67	80/67
C.U. FLA	26.2	19.4	30.9
VOLTAGE	1-60-240	1-60-240	1-60-240
MANUFACTURER	RHEEM	RHEEM	RHEEM
AHU MODEL	RHMV4821SE	RHMV3621	RHMV5021
C.U. MODEL	RA18AZ48AJV	RA18AZ36	RA18AZ60
SEER2	18.0	18.0	18.0
REF. LIQUID/SUCTION	3/8" - 7/8"	3/8" - 7/8"	3/8" - 1 1/8"
REFRIGERANT TYPE	R-410A		

-MIN. DUCT INSULATION SHALL BE R-6 FOR A/C DUCT IN NON AIR CONDITIONING SPACES

-PROVIDE PROGRAMMABLE THERMOSTAT

H.V.A.C. MATERIALS NOTES:

1. **THE CONTRACTOR SHALL FURNISH ALL LABOR, MATERIAL AND EQUIPMENT FOR A COMPLETE H.V.A.C. SYSTEM IN ACCORDANCE WITH THESE DRAWINGS. THE FLORIDA BUILDING CODE AND THE LATEST EDITION OF THE FOLLOWING PUBLICATIONS:**
   A) ANS B9.1 MECHANICAL REFRIGERATION
   B) NFPA PAMPHLETS 90A & 91
   C) SMACNA
   D) ASHORE.
2. **ALL AIR CONDITIONING DUCTWORK SHALL BE 1-1/2 INCH STANDARD DUTY FOIL REINFORCED FIBERGLASS WITH MANUFACTURED LOGO PRINTED ON THE VAPOR BARRIER.**
3. **DUCT SIZE SHOWN ARE NET FREE AREA.**
4. **ALL AIR DEVICES (DIFFUSERS, REGISTERS AND GRILLES) SHALL BE ALL ALUMINUM CONSTRUCTION, WITH EXPOSED SURFACE CHEMICALLY TREATED TO RECEIVE PAINT TO MATCH COLOR OR AIR GUIDE OR APPROVED EQUAL.**
5. **PROVIDE OPPOSED BLADE DAMPERS AT ALL DIFFUSERS AND REGISTERS.**
6. **PROVIDE TURNING VANES AND EXTRACTORS ALL ELBOWS AND TAKE OFF.**
7. **THERMOSTATS SHALL BE COMBINATION COOLING/HEATING WITH SYSTEM COOL/AUTO/HEAT/OFF AND FAN ON/AUTO SELECTOR SWITCHES.**
8. **FAN COIL SHALL BE MOUNTED ON A STRUCTURAL STEEL BASE WITH CONTINUOUS STRIP OF ISO MODE AROUND ITS PERIMETER. CONDENSING UNIT SHALL BE ANCHORED TO ITS BASE PER MANUFACTURER'S SPECIFICATIONS.**
9. **REFRIGERANT PIPING SHALL BE COPPER TYPE "L" ARMA-FLEX INSULATION SHALL BE PROVIDED FOR SUCTION LINES.**
10. **PROVIDE NEW FILTERS FOR FAN COIL BEFORE STARTING. THESE FILTERS MUST ALSO BE REPLACED PRIOR TO FINAL ACCEPTANCE BY OWNER.**
11. REFRIGERANT SUCTION LINE TO BE INSULATED WITH INSULATION HAVING A THERMAL RESISTIVELY OF AT LEAST R-4 AND HAVING AN EXTERNAL PERMANENT NOT EXCEEDING 0.05 PERM WHEN TESTED IN ACCORDANCE WITH ASTM E 96. FMC-M1411.5

THERMAL VALUES

CMU WALL INSULATION R-7.1
WOOD WALL INSULATION R-11
ROOF INSULATION R-30
ROOF INSULATION UNDER SLAB R-7.1
WINDOW U-VALUE 1.06
WINDOW SHGC 0.43

EXHAUST FAN SCHEDULE

EF-1
SHALL BE BROAN MODEL n. 770 @ 120V/1 PH/60 HZ.
1/4" SP 50 CFM W/BACKDRAFT DAMPER.
EF-2
SHALL BE BROAN MODEL N. 676 @ 120V/1 PH/60 HZ
1/4" SP 110 CFM W/BACKDRAFT DAMPER

EF-3
SHALL BE DAYTON 4D430T- @ 1/8" SP .PROVIDE BACK DRAFT DAMPER.

ALL EXHAUST DISCHARGES, EXCEPT THE DRYER ONE, SHALL BE PROVIDED WITH INSECT SCREENS AS PER FBCM 501.3.2

AIR EXHAUST OPENINGS SHALL TERMINATE NOT LESS THAN 3 FEET FROM OPERABLE AND NON-OPERABLE OPENINGS INTO THE BUILDING

EXTERIOR INSULATION SHALL BE COVERED WITH A PROTECTIVE MATERIAL TO PREVENT DAMAGE FROM SUNLIGHT, MOISTURE LANDSCAPING OPERATIONS, EQUIPMENT MAINTENANCE, AND WIND. ADHESIVE TAPE SHALL NOT BE PERMITTED

EXHAUST DUCT FOR DOMESTIC DRYER SHALL HAVE A SMOOTH INTERIOR FINISH AND SHALL BE CONSTRUCTED OF METAL A MIN. OF 28 GAGE, DUCT SIZE SHALL BE 4 INCHES NOMINAL IN DIAMETER.

HOOD VENTILATION SYSTEM TO BE PROVIDED WITH A BACK DRAFT DAMPER AND CORROSION RESISTANT SCREEN AS PER 2020 FMCR-M1503.1 AND FBCR-R303.6

HVAC DESIGN REQUIRES	YES	NO
DUCT SMOKE DETECTOR		X
FIRE DAMPER(S)		X
SMOKE DAMPER(S)		X
FIRE RATED ENCLOSURE		X
FIRE RATED ROOF CEILING ASSEMBLY		X
FIRE STOPPING		X
SMOKE CONTROL		X
CEILING FANS		X
PROGRAMMABLE THERMOSTAT	X	

TABLE 43-C2,2.1. DEFAULT WINDOW ENERGY VALUE FOR RESIDENTIAL APPLICATIONS

TYPE	U - FACTOR	SOLAR HEAT COEFFIENT (SHGC)
SINGLE PANE CLEAR		
SINGLE PANE TINT	1.02	0.25
DOUBLE PANE CLEAR		
DOUBLE PANE TINT		

GENERAL MECHANICAL SYSTEM REQUIREMENTS

M1301.2 IDENTIFICATION
EACH LENGTH OF PIPE AND TUBING AND EACH PIPE FITTING UTILIZED IN A MECHANICAL SYSTEM SHALL BEAR THE IDENTIFICATION OF THE MANUFACTURER

M1301.5 THIRD PARTY TESTING AND CERTIFICATION
PIPING, TUBING AND FITTINGS SHALL COMPLY WITH THE APPLICABLE REFERENCED STANDARDS, SPECIFICATIONS AND PERFORMANCE CRITERIA OF THIS CODE AND SHALL BE IDENTIFIED IN ACCORDANCE WITH SECTION M1301.2.PIPING, TUBING AND FITTING SHALL EITHER BE TESTED BY AN APPROVED THIRD-PARTY TESTING AGENCY OR CERTIFIED BY AN APPROVED THIRD-PARTY CERTIFICATION AGENCY.

DE LA LLAMA
ARCHITECTURE
PLANNING
INTERIOR DESIGN

JORGE A. DE LA LLAMA
STATE OF FLORIDA - AR0007707
STATE OF COLORADO - ARC.00404538

522 MADEIRA CORAL GABLES , FLORIDA 33134
(305) 461-5590 (305) 567-1425 FAX
EMAIL : JADELLARCH@AOL.COM

CONSULTANTS

STATE OF FLORIDA JORGE ARTURO DE LA LLAMA AR0007707 REGISTERED ARCHITECT

JORGE A. DE LA LLAMA
STATE OF FLORIDA - AR0007707
STATE OF COLORADO - ARC.00404538

PROJECT NAME

P8
PINECREST EIGHT

13100 SW 80TH AVE
PINECREST, FLORIDA 33156

FILE NAME

JUNCO RESIDENCE

DATE
DEC 16, 2024

REVISION	DATE	BY

Jorge A. de la Llama — Digitally signed by Jorge A. de la Llama DN: c=US, serialNumber=AATL2023112732021, cn=Jorge A. de la Llama, email=jadlarch@yahoo.com Date: 2025.01.31 09:10:54 -05'00'

Jorge A. de la Llama — Digitally signed by Jorge A. de la Llama DN: c=US, serialNumber=AATL2023112732021, cn=Jorge A. de la Llama, email=jadlarch@aol.com Date: 2025.01.14 20:53:26 -05'00'

DRAWING NAME

MECHANICAL GROUND FLOOR

DESING BY:
ZECKY DA COSTA

DRAWN BY:
HUMBERTO LANTIGUA

SHEET N0.

M-1

THE CONTENTS OF THIS DOCUMENT, ITS DESIGNS AND DRAWINGS ARE THE COPYRIGHTED PROPERTY OF DE LA LLAMA + ASSOCIATES INC. AND MAY NOT BE REPRODUCED IN WHOLE OR IN PART WITHOUT THE EXPRESSED WRITTEN CONSENT OF DE LA LLAMA + ASSOCIATES, INC.
THE GENERAL CONTRACTOR AND ALL TRADES PERFORMING WORK ON THIS PROJECT SHALL BE EXCLUSIVELY RESPONSIBLE FOR VERIFYING ALL DIMENSIONS AND CONDITIONS WITH REPORTING ANY DISCREPANCIES TO THE DE LA LLAMA + ASSOCIATES, INC. BEFORE COMMENCING ANY WORK.

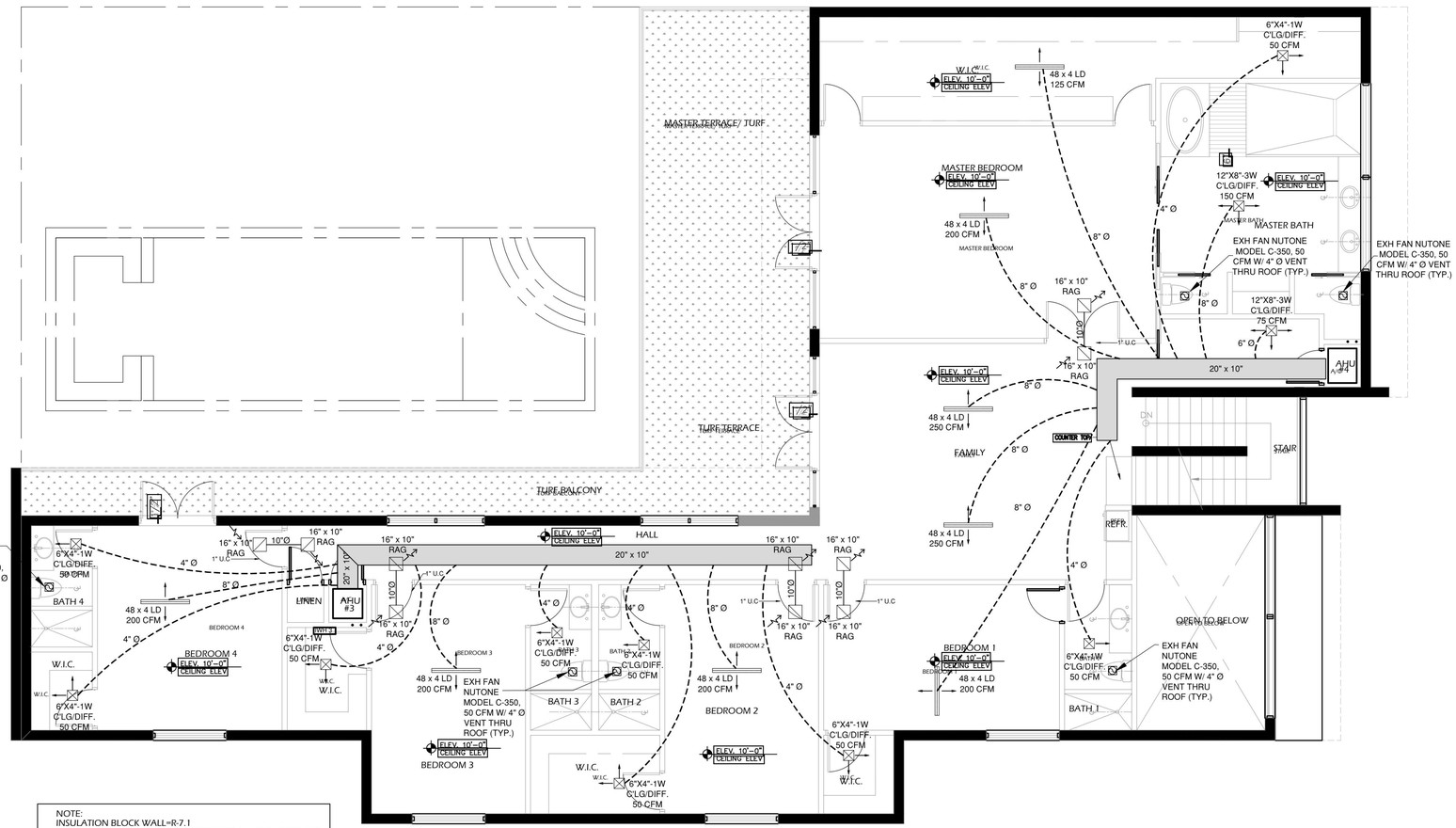

NOTE:
INSULATION BLOCK WALL=R-7.1
UNDER ROOF INSULATION= R-30 SPRAY FOAM ABOVE CEILING
ABOVE ROOF INSULATION= R-30

MECHANICAL SECOND FLOOR PLAN

SCALE: 3/16" =1'-0"

AIR CONDITIONING GENERAL NOTES

1. SCOPE OF WORK:

A. INSTALL A COMPLETE NEW HVAC SYSTEM AS SHOWN ON DRAWINGS.

2. EQUIPMENT SHALL HAVE CAPACITIES REQUIRED TO OBTAIN A SUITABLE OPERATING BALANCE BETWEEN ASSOCIATED ITEMS OF EQUIPMENT. ALL DAMPERS AND CONTROLS SHALL BE ADJUSTED TO OBTEIN THE REQUIRED CAPACITIES UNDER ACTUAL OPERATING CONDITIONS OF EACH ITEMS OF EQUIPMENT SHALL NOT EXCEED THE RATED MOTOR HORSEPOWER. BALANCED CAPACITIES BE EQUAL TO THOSE SCHEDULED AT DESIGN CONDITIONS.

3. COOLING SYSTEM AREA DESIGNED FOR 78F D8 INSIDE . CONDITIONS WITH OUTSIDE AIR TEMPERATURE OF 91F D.B. 79F W.B. HEATING IS DESIGNED TO MAINTAIN MINIMUM INSIDE TEMPERATURES OF 72F D.B. WITH AND OUTSIDE TEMPERATURE OF 45F D.B.

4. AIR DISTRIBUTION DEVICES SHALL BE CONSTRUCTED OF ALLUMINIUM, AS MANUFACTURED BY TITUS. CEILING DIFFUSER TO BE TITUS SERIES 200-F5, W/ OPPOSED BLADE DAMPER, AND SUPPLY AIR REGISTERS TO BE MODEL 271-FL EXPOSED GRILLAGE SHALL BE PAINTED OF SAME COLOR OF THE CEILING OR WALL IN WICH IT IS LOCATED IN AND ALL SCREWS SHALL BE OF THE COUNTERSUNK TYPE ALSO PAINTED AS GRILLAGE.

5. CONSTRUCT AIR CONDITIONING DUCTWORK FROM ONE INCH THICK FOR DUCTWORK THAT RUNS BETWEEN FLOORS AND ONE HALF INCH THICK FOR DUCTWORK THAT RUNS WITHIN ATTIC SPACE STANDARD WEIGHT, FIBROUS GLASS DUCTBOARD. FABRICATED, SEAL AND INSTALLED PER LATEST SMACNA FIBROUS GLASS DUCT MANUAL RECOMMENDATIONS. DUCT SIZES NOTED ARE CLEAR INSIDE DIMENSIONS PROVIDE ALL ELBOWS WITH DOUBLE THICKNESS TURNING VANES AT ALL BRANCH DUCT TAKE-OFFS AS REQUIRED FOR PROPER AIR BALANCING.

6. AIR COOLED CONDENSING UNITS TO BE AS SCHEDULE, OR APPROVED EQUAL PROVIDED EACH UNIT WITH ANTI- CYCLING DEVICE OR TIMER, HIGH AND LOW PRESSURE CONTROLLERS, AND FILTER DRIER.

7. FANCOIL UNIT TO BE AS SCHEDULE, OR APPROVED EQUAL COORDINATE WITH ELECTRICIAN TO CONNECT MULTI-SPEED FAN MOTOR TO PROPER SPEED TAPS TO DELIVER SCHEDULED AIR QUANTITIES, AGAINST SYSTEMS RESISTANCE AS INSTALLED DURING THE COOLING MODE; AND TO DELIVER MINIMUM SUPPLY AIR CFM, AS RECOMMENDED BY UNIT MANUFACTURER DURING THE HEATING MODE.

8. INSULATE REFRIGERANT SUCTION PIPE WITH 1/2 INCH THICK ARMAFLEX FINISH INSULATION EXPOSED TO WEATHER WITH TWO COATS OF GLASSFAB AND MASTIC. PROVIDE 3" PVC JACKET FOR ALL REFRIGERANT LINES UNDER GROUND FLOOR.

9. COORDINATE ALL WORK WITH OTHER TRADES INVOLVED, THIS INCLUDES WALL AND ROOF PENETRATIONS AND REQUIERED ELECTRICAL SERVICE AND CONTROL WIRING. PLUMBER IS TO PROVIDE A MINIMUM 1-1/4 INCH CONDENSATE TRAP SEAL AT EACH FANCOIL UNIT, PIPE TO OUTSIDE OF HOUSE 6" ABOVE FINISHED GRADE.

10. THERMOSTAT SHALL HAVE A MAXIMUM HEATING MODE TEMPERATURE SETTING OF 78F AND A MINIMUM COOLING MODE TEMPERATURE SETTING OF 70F . IT SHALL BE ADJUSTABLE TO PROVIDE A TEMPERATURE OF UP TO 10F BETWEEN FULL HEATING AND FULL COOLING. HEATING AND COOLING TO BE NON-CONCURRENT THERMOSTAT TO HAVE REQUIRED STAGES OF COOLING AND HEATING FOR COMPATIBILITY WITH AIR CONDITIONING EQUIPMENT PROVIDE.

11. THE AIR FLOW AT EACH SUPPLY OUTLET SHOWN ARE PRELIMINARY AND FINAL FLOW AT EACH OUTLET SHALL BE DETERMINED BY DEGREE OF COMFORT TEMPERATURE.

INSTALLATION OF ALL EXTERIOR AIR CONDITIONING CONDENSING UNITS, AT GROUND LEVEL, IN SINGLE FAMILY DUPLEX AND FEE SIMPLE TOWNHOUSES IN UNINCORPORATED MIAMI-DADE COUNTY SHALL BE CONCRETE SLAB, ON THE INSIDE OF THE UNIT, WITH ANA ANCHOR BOLT OF 500 POUNDS MINIMUM PULL OF CAPACITY

A/C SPLIT SYSTEM SCHEDULE

UNIT NO.	A/C # 1	A/C #2, 4	A/C # 3
TOTAL CAPACITY BTU/HR	45,000	34,600	55,000
SENS CAPACITY BTU/HR	31,200	22,200	38,200
CFM SUPPLY	1,600	1,200	2,000
HEATER KW	7.5	7.5	7.5
ESP-IN WG.	0.30	0.30	0.30
TEMP. AIR ENT. COIL DB/WB	80/67	80/67	80/67
C.U. FLA	26.2	19.4	30.9
VOLTAGE	1-60-240	1-60-240	1-60-240
MANUFACTURER	RHEEM	RHEEM	RHEEM
AHU MODEL	RHMV4821SE	RHMV3621	RHMV6021
C.U. MODEL	RA18AZ48AJV	RA18AZ36	RA18AZ60
SEER2	18.0	18.0	18.0
REF. LIQUID/SUCTION	3/8" - 7/8"	3/8" - 7/8"	3/8" - 1 1/8"
REFRIGERANT TYPE		R-410A	

-MIN. DUCT INSULATION SHALL BE R-6 FOR A/C DUCT IN NON AIR CONDITIONING SPACES

-PROVIDE PROGRAMMABLE THERMOSTAT

DE LA LLAMA
ARCHITECTURE
PLANNING
INTERIOR DESIGN

JORGE A. DE LA LLAMA
STATE OF FLORIDA - AR0007707
STATE OF COLORADO - ARC.00404538

522 MADEIRA CORAL GABLES , FLORIDA 33134
(305) 461-5590 (305) 567-1425 FAX
EMAIL : JADELLARCH@AOL.COM

CONSULTANTS

STATE OF FLORIDA
JORGE ARTURO DE LA LLAMA
AR0007707
REGISTERED ARCHITECT

JORGE A. DE LA LLAMA
STATE OF FLORIDA - AR0007707
STATE OF COLORADO - ARC.00404538

PROJECT NAME

P8
PINECREST EIGHT

13100 SW 80TH AVE
PINECREST, FLORIDA 33156

FILE NAME

JUNCO RESIDENCE

DATE
DEC 16, 2024

REVISION	DATE	BY

Jorge A. de la Llama
Digitally signed by Jorge A. de la Llama
DN: c=US, serialNumber=AATL202311273, 2.16.840.1.113883.3.4.1=Jorge A. de la Llama, cn=Jorge A. de la Llama, email=jadellarch@aol.com
Date: 2025.01.14 20:55:21 -05'00'

DRAWING NAME

MECHANICAL SECOND FLOOR

DESING BY:
ZECKY DA COSTA

DRAWN BY:
HUMBERTO LANTIGUA

SHEET N0.

M-2

THE CONTENTS OF THIS DOCUMENT, ITS DESIGNS AND DRAWINGS ARE THE COPYRIGHTED PROPERTY OF DE LA LLAMA + ASSOCIATES INC. AND MAY NOT BE REPRODUCED IN WHOLE OR IN PART WITHOUT THE EXPRESSED WRITTEN CONSENT OF DE LA LLAMA + ASSOCIATES, INC.
THE GENERAL CONTRACTOR AND ALL TRADES PERFORMING WORK ON THIS PROJECT SHALL BE EXCLUSIVELY RESPONSIBLE FOR VERIFYING ALL DIMENSIONS AND CONDITIONS WITH REPORTING ANY DISCREPANCIES TO THE DE LA LLAMA + ASSOCIATES, INC. BEFORE COMMENCING ANY WORK.

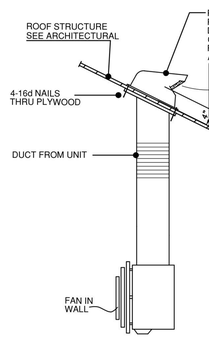

TYPICAL ROOF CAP DETAIL

A DRYER AND/OR TOILET EXH.

NTS

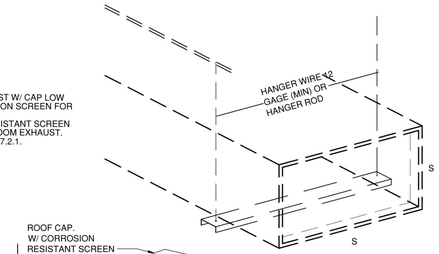

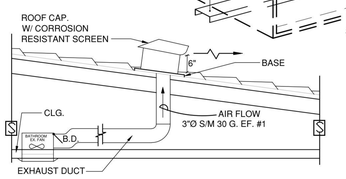

EXHAUST FAN & DUCT-DETAIL

N.T.S.

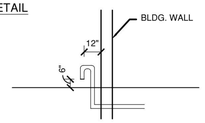

CONDENSATE WATER DISCHARGE DETAIL

N.T.S.

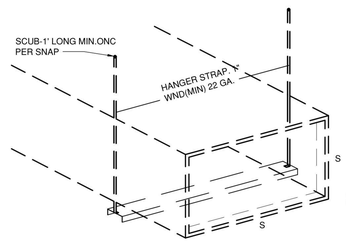

HANGER AND SUPPORTS

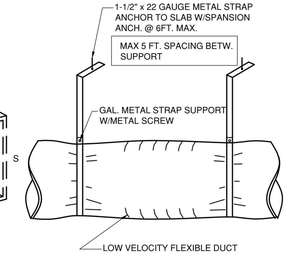

FLEXIBLE DUCT SUPPORT DETAIL

N.T.S.

*THE REFRIGERANT CIRCUIT ACCESS PORTS LOCATED OUTDOORS SHALL BE FITTED WITH LOCKING-TYPE TAMPER-RESISTANT CAPS OR SHALL BE OTHERWISE SECURED TO PREVENT UNAUTHORIZED ACCESS. F.B.C.-R M1411.8.

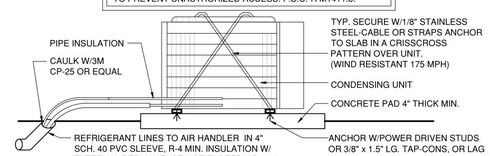

ALL INSTALLATIONS OF EXTERIOR AIR CONDITIONING CONDENSER UNITS IN SINGLE-FAMILY IN UNINCORPORATED MIAMI-DADE COUNTY SHALL COMPLY WITH THE FOLLOWING:

- AN ANCHOR BOLT WITH A MINIMUM OF 500 POUNDS PULL-OUT RESISTANCE SHALL SECURE THE AIR CONDITIONING CONDENSER UNIT FROM WITHIN THE UNIT THROUGH TO THE CONCRETE SLAB ON WHICH THE UNIT RESTS. (NOA No. 18-0719.07)

CONDENSING UNIT INSTALLATION DETAIL

N.T.S.

STANDARD 3" WIDE HANGERS

HANGER EXTENSION TO BE THE SUM OF THE DISTANCES BETWEEN THE HANGING WIRES AND THE DUCT SIZE, ID (SMACNA)

DUCT SIZE, INCHES	MAXIMUN HANGER SPACING
48: WIDE OR WRATER	4 FT.
LESS THAN 48" WIDE AND LESS THAN 48" DEEP	6 FT.
WIDTH BETWEEN 28" & 48" AND GREATER THAN 16" DEEP	6 FT.
LESS THAN 29" WIDE AND 16" DEPTH OR LESS	8 FT.

CHANNEL SECTION

IF TOTAL EXTENSION IS NOT GREATER THAN:	MINIMUN CHANNEL GAUGE	MINIMUM CHANNEL PROFILE
6"	24	3" x 1.5"
18"	22	3" x 2"
30"	18	3" x 2"

USE OF 2" WIDE

22 GAUGE 2' x 1.5" HANGER MAY BE SUBSTITUTED FOR 3" HANGER FOR DUCTS WITH WIDTHS NOT OVER 48" AND DEPTHS NOT OVER 24" PROVIDED THAT NOT MORE THAN ONE JOINT OCCURS BETWEEN HANGER AND THAN MAXIMUM HANGER SPACING 4 FT. EXCEPTION: WHEN DUCT PERIMETER IS 80" OR LESS AND DOES NOT REQUIRE REINFORCEMENT TWO JOINTS ARE PERMITTED BETWEEN HANGERS.

HVAC DESIGN REQUIRES:	YES	NO
DUCT SMOKE DETECTOR		X
FIRE DAMPER(S)		X
SMOKE DAMPER(S)		X
FIRE RATED ENCLOSURE		X
FIRE RATED ROOF CEILING ASSEMBLY		X
FIRE STOPPING		X
SMOKE CONTROL		X
PROGRAMMABLE THERMOSTAT	X	

H.V.A.C. MATERIALS NOTES:

1. **THE CONTRACTOR SHALL FURNISH ALL LABOR, MATERIAL AND EQUIPMENT FOR A COMPLETE H.V.A.C. SYSTEM IN ACCORDANCE WITH THESE DRAWINGS. THE FLORIDA BUILDING CODE AND THE LATEST EDITION OF THE FOLLOWING PUBLICATIONS:**
   A) ANS B9.1 MECHANICAL REFRIGERATION
   B) NFPA PAMPHLETS 90A & 91
   C) SMACNA
   D) ASHORE.
2. **ALL AIR CONDITIONING DUCTWORK SHALL BE 1-1/2 INCH STANDARD DUTY FOIL REINFORCED FIBERGLASS WITH MANUFACTURED LOGO PRINTED ON THE VAPOR BARRIER.**
3. **DUCT SIZE SHOWN ARE NET FREE AREA.**
4. **ALL AIR DEVICES (DIFFUSERS, REGISTERS AND GRILLES) SHALL BE ALL ALUMINUM CONSTRUCTION, WITH EXPOSED SURFACE CHEMICALLY TREATED TO RECEIVE PAINT TO MATCH COLOR OR AIR GUIDE OR APPROVED EQUAL.**
5. **PROVIDE OPPOSED BLADE DAMPERS AT ALL DIFFUSERS AND REGISTERS.**
6. **PROVIDE TURNING VANES AND EXTRACTORS ALL ELBOWS AND TAKE OFF.**
7. **THERMOSTATS SHALL BE COMBINATION COOLING/HEATING WITH SYSTEM COOL/AUTO/HEAT/OFF AND FAN ON/AUTO SELECTOR SWITCHES.**
8. **FAN COIL SHALL BE MOUNTED ON A STRUCTURAL STEEL BASE WITH CONTINUOUS STRIP OF ISO MODE AROUND ITS PERIMETER. CONDENSING UNIT SHALL BE ANCHORED TO ITS BASE PER MANUFACTURER'S SPECIFICATIONS.**
9. **REFRIGERANT PIPING SHALL BE COPPER TYPE "L" ARMA-FLEX INSULATION SHALL BE PROVIDED FOR SUCTION LINES.**
10. **PROVIDE NEW FILTERS FOR FAN COIL BEFORE STARTING. THESE FILTERS MUST ALSO BE REPLACED PRIOR TO FINAL ACCEPTANCE BY OWNER.**
11. REFRIGERANT SUCTION LINE TO BE INSULATED WITH INSULATION HAVING A THERMAL RESISTIVELY OF AT LEAST R-4 AND HAVING AN EXTERNAL PERMANENT NOT EXCEEDING 0.05 PERM WHEN TESTED IN ACCORDANCE WITH ASTM E 96. FMC-M1411.5

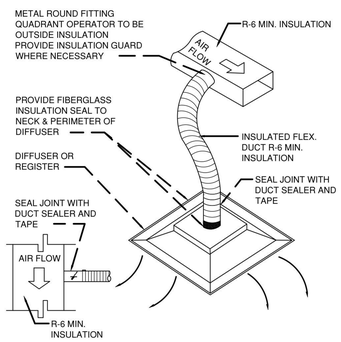

FLEXIBLE DUCT CONNECTION DETAIL

N.T.S.

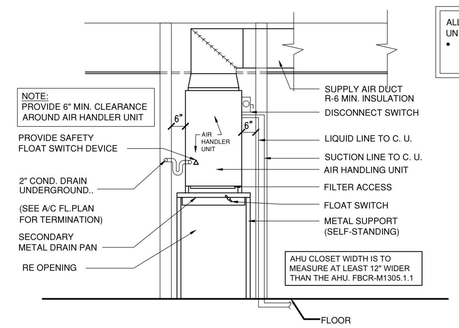

AIR CONDITIONING CLOSET

N.T.S.

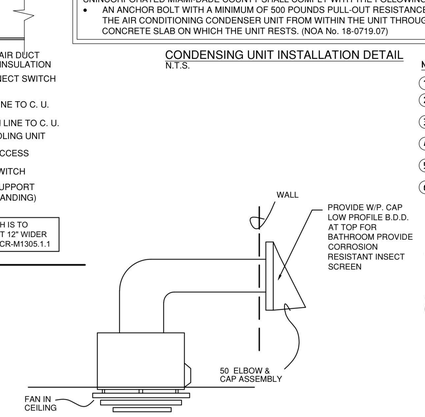

TYPICAL ROOF CAP DETAIL

TOILET EXH THRU WALL.

NTS

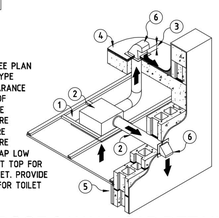

NOTES

1. - EXHAUST FAN
2. - EXHUST DUCT SEE PLAN FOR SIZE AND TYPE
3. - MINIMUM 6" CLEARANCE FROM FINISH ROOF
4. - ROOF STRUCTURE SEE ARCHITECTURE
5. - WALL STRUCTURE SEE ARCHITECTURE
6. - PRO□IDE W/P. CAP LOW PROFILE B.D.D. AT TOP FOR DRYER AND TOILET. PROVIDE INSECT SCREEN FOR TOILET EXHAUST ONLY.

TYPICAL ROOF & WALL CAP DETAIL
DRYER AND / TOILET EXH.

(TYPICAL)

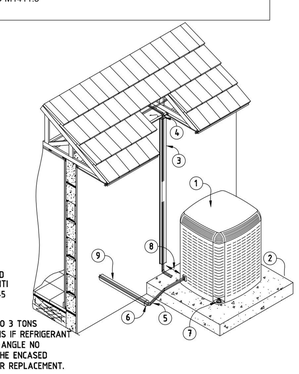

NOTES

1. - CONDENSING UNIT
2. - 4" CONCRETE SLAB
3. - METAL BOOT PAINTED TO MATCH EXTERIOR FACADE IF REFRIGERANT LINES RUN IN ATTIC
4. - REFRIGERANT LINES IN ATTIC TO WALL MOUNTED UNIT
5. - REFRIGERANT UNDER GROUND TO AIR HANDLER UNIT
6. - PACK VOID SW/ ARMAFLEX & COAT W/ SILICONE SEALANT FOR TIGHT CLOSURE
7. - 1 ½ LONG "HELTI" POWER ACTIVATED PIN INTO SLAB (TYP. OF 4) 500# ANTI THEFT BOLT PER MDC CH8C1 SEC.8C-5
8. - MINIMUN SEPARATION TO WALL 12"
9. - PROVIDE 4" PVC SLEEVE FOR 1.25 TO 3 TONS & 6" PVC SLEEVE FOR 3.5 TO 5 TONS IF REFRIGERANT LINES RUN UNDER SLAB HAVING AN ANGLE NO GREATER THAN 45 DEGREES WITH THE ENCASED REFRIGERANT PIPING REMO□ABLE FOR REPLACEMENT.

CONDENSING UNIT MOUNTING DETAIL

N.T.S.

(TYPICAL)

1" UC

THE BEDROOM DOORS SHALL BE PROVIDED WITH 1-INCH UNDERCUT DOOR AS PER FBC-R M1602.3.

SECONDARY DRAIN PAN NOTES

*THE SECONDARY DRAIN PAN SHALL BE NOT LESS THAN THREE (3) INCHES LARGER THAN THE UNIT, OR THE COIL DIMENSIONS IN WIDTH AND LENGTH AND SHALL BE CONSTRUCTED OF CORROSION-RESISTANT MATERIAL. GALVANIZED SHEET STEEL PANS OF NOT LESS THAN 24 GAUGE. FBC-R M1411.3.1.

*THE SECONDARY DRAIN PAN FLOW SWITCH SHALL SHUT OFF THE AIR HANDLING UNIT IN THE EVENT THE PRIMARY DRAIN IS BLOCKED.
FBC-R M1411.3,1.

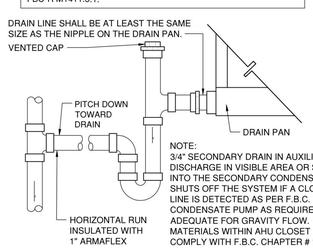

NOTE:
3/4" SECONDARY DRAIN IN AUXILIARY DRAIN PAN TO DISCHARGE IN VISIBLE AREA OR SAFETY SWITCH TIED INTO THE SECONDARY CONDENSATE DRAIN LINE THAT SHUTS OFF THE SYSTEM IF A CLOGGED CONDENSATE LINE IS DETECTED AS PER F.B.C. 141411.3.1 PROVIDE CONDENSATE PUMP AS REQUIRED IF CD SLOPE NOT ADEQUATE FOR GRAVITY FLOW. NO COMBUSTIBLE MATERIALS WITHIN AHU CLOSET P-TRAP SHALL COMPLY WITH F.B.C. CHAPTER # 10

AHU CONDENSATE DRAIN DISCHARGE

N.T.S.

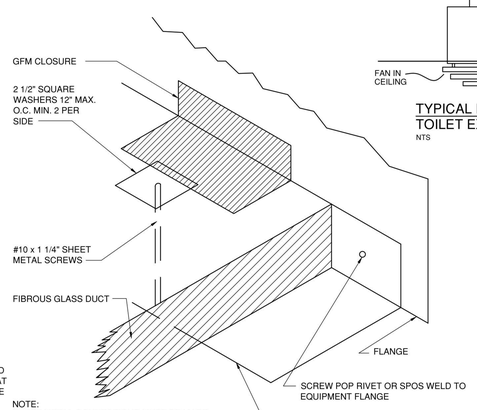

NOTE:
SHEET METAL CONNECTIONS MUST BE MADE USING GLASS FABRIC AND MASTIC (GFM)
FIGURE 2-25
PG # 2.14
PER SMACNA

SHEET METAL AND EQUIPMENT CONNECTION DETAIL

N.T.S.

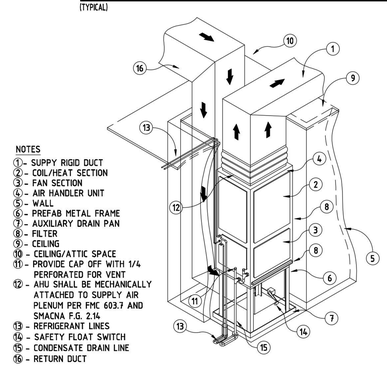

NOTES

1. - SUPPY RIGID DUCT
2. - COIL/HEAT SECTION
3. - FAN SECTION
4. - AIR HANDLER UNIT
5. - WALL
6. - PREFAB METAL FRAME
7. - AUXILIARY DRAIN PAN
8. - FILTER
9. - CEILING
10. - CEILING/ATTIC SPACE
11. - PROVIDE CAP OFF WITH 1/4 PERFORATED FOR VENT
12. - AHU SHALL BE MECHANICALLY ATTACHED TO SUPPLY AIR PLENUM PER FMC 603.7 AND SMACNA F.G. 2.14
13. - REFRIGERANT LINES
14. - SAFETY FLOAT SWITCH
15. - CONDENSATE DRAIN LINE
16. - RETURN DUCT

AHU CLOSET INSTALLATION

N.T.S.

(TYPICAL)

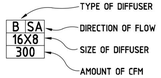

AIR OUTLET/INLET TAG

N.T.S.

(TYPICAL)

NOTE:

1. PROVIDE SECONDARY DRAIN PAN WITH AN APPROVED WATER LEVEL DETECTOR OR FLOAT SWITCH DEVICE THAT WILL CONTROL OVERFLOW BY AUTOMATICALLY SHUTTING DOWN THE AHU's. FOR SWITCH MANUF. AND MODEL NO PLEASE REFER TO PLUMBING DRAWINGS.

2. PROVIDE MIN. 4" CLEARANCE ALL AROUND AC UNIT INSTALLED INSIDE AC CLOSET AS PER FMC 603.1.4. AC CLOSET TO MEASURE AT LEAST 12" MORE THAN THE

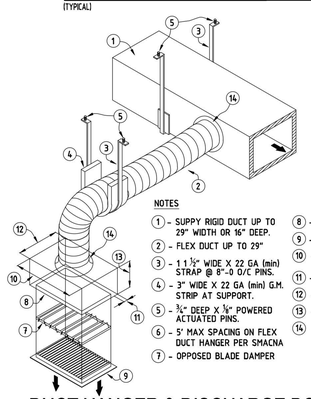

NOTES

1. - SUPPY RIGID DUCT UP TO 29" WIDTH OR 16" DEEP.
2. - FLEX DUCT UP TO 29"
3. - 1 1/2" WIDE X 22 GA (min) STRAP @ 8"-0 O/C PINS.
4. - 3" WIDE X 22 GA (min) G.M. STRIP AT SUPPORT.
5. - 3/4" DEEP X 1/8" POWERED ACTUATED PINS.
6. - 5' MAX SPACING ON FLEX DUCT HANGER PER SMACNA
7. - OPPOSED BLADE DAMPER
8. - DISCHARGE BOX
9. - GRILLE (SEE PLANS)
10. - LENGTH IS REQ. BY GRILLE SIZE
11. - 1" MINIMUM LENGTH
12. - DUCT HEIGHT + 2"
13. - 6" MINIMUM LENGTH
14. - STRAP AS PER SMACNA 2.12 PROVIDE ALUMINUM TAPE CO□ERING STRAP & JOINT (NOT SHOW FOR CLARITY)

DUCT HANGER & DISCHARGE BOX DETAIL

N.T.S.

(TYPICAL) (DISCHARGE BOX DETAIL PER SMACNA 2.16)

DE LA LLAMA
ARCHITECTURE
PLANNING
INTERIOR DESIGN

JORGE A. DE LA LLAMA
STATE OF FLORIDA - AR0007707
STATE OF COLORADO - ARC.00404538

522 MADEIRA CORAL GABLES , FLORIDA 33134
(305) 461-5590 (305) 567-1425 FAX
EMAIL : JADELLARCH@AOL.COM

CONSULTANTS

STATE OF FLORIDA JORGE A. MURO DE LA LLAMA AR0007707 REGISTERED ARCHITECT

JORGE A. DE LA LLAMA
STATE OF FLORIDA - AR0007707
STATE OF COLORADO - ARC.00404538

PROJECT NAME

P8
PINECREST EIGHT

13100 SW 80TH AVE
PINECREST, FLORIDA 33156

FILE NAME

JUNCO RESIDENCE

DATE
DEC 16, 2024

REVISION	DATE	BY

Jorge A. de la Llama

Digitally signed by Jorge A. de la Llama
DN: c=US, serialNumber=A01702011172325021, o=Jorge A. de la Llama, cn=Jorge A. de la Llama, emailAddress=jadellarch@aol.com
Date: 2025.01.14 20:56:55 -05'00'

DRAWING NAME

MECHANICAL DETAILS

DESING BY:
ZECKY DA COSTA

DRAWN BY:
HUMBERTO LANTIGUA

SHEET N0.

M-3

THE CONTENTS OF THIS DOCUMENT, ITS DESIGNS AND DRAWINGS ARE THE COPYRIGHTED PROPERTY OF DE LA LLAMA + ASSOCIATES INC. AND MAY NOT BE REPRODUCED IN WHOLE OR IN PART WITHOUT THE EXPRESSED WRITTEN CONSENT OF DE LA LLAMA + ASSOCIATES, INC.
THE GENERAL CONTRACTOR AND ALL TRADES PERFORMING WORK ON THIS PROJECT SHALL BE EXCLUSIVELY RESPONSIBLE FOR VERIFYING ALL DIMENSIONS AND CONDITIONS WITH REPORTING ANY DISCREPANCIES TO THE DE LA LLAMA + ASSOCIATES, INC. BEFORE COMMENCING ANY WORK.

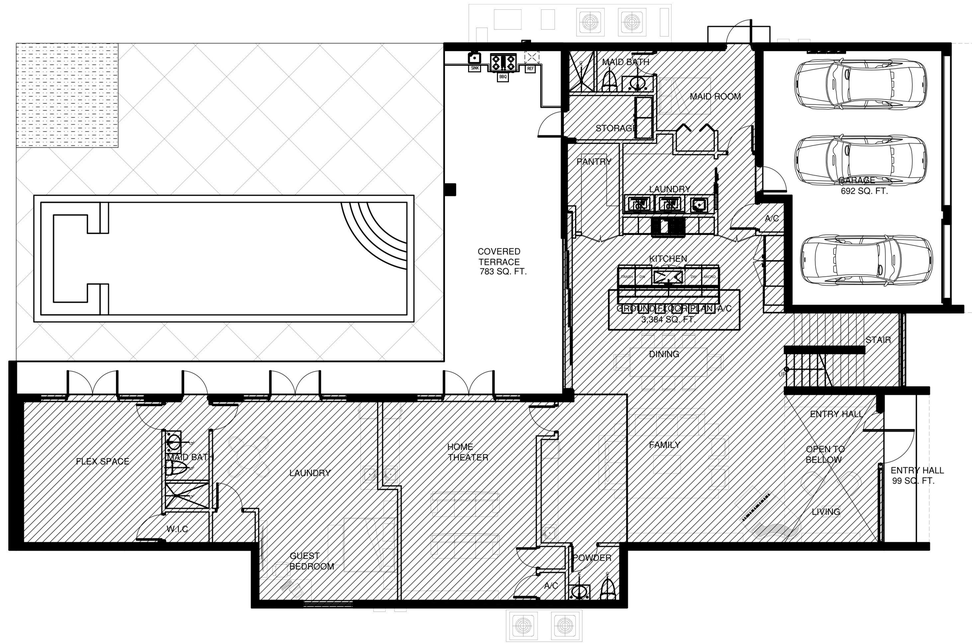

PERIMETER LINE DRAWING A/C - GROUD FLOOR PLAN

SCALE: 1/8" =1'-0"

AREA BREAKDOWN	
GROUND FLOOR PLAN A/C	3,384 SQ. FT.
GARAGE AREA	692 SQ. FT.
COVERED TERRACE AREA	783 SQ. FT.
ENTRY HALL	99 SQ. FT.
TOTAL AREA	4,958 SQ. FT.
SECOND FLOOR PLAN A/C	4,076 SQ. FT.
BALCONY	256 SQ. FT.
MASTER TERRACE	525 SQ. FT.
TOTAL AREA	9,815 SQ. FT.

AREA BREAKDOWN A/C	
GROUND FLOOR PLAN A/C	3,384 SQ. FT.
SECOND FLOOR PLAN A/C	4,076 SQ. FT.
TOTAL A/C AREA	7,460 SQ. FT.

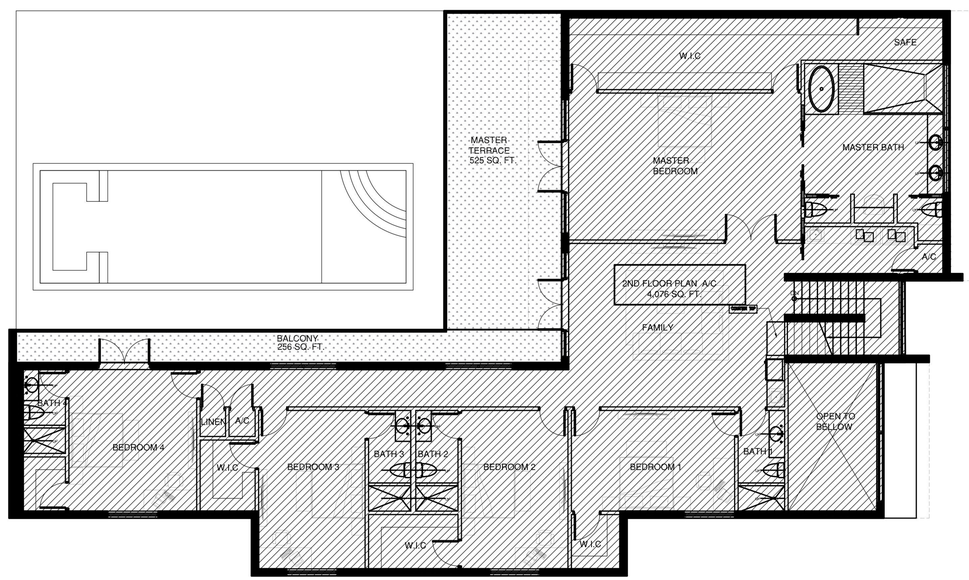

PERIMETER LINE DRAWING A/C - SECOND FLOOR PLAN

SCALE: 1/8" =1'-0"

DE LA LLAMA

ARCHITECTURE
PLANNING
INTERIOR DESIGN

JORGE A. DE LA LLAMA
STATE OF FLORIDA - AR0007707
STATE OF COLORADO - ARC.00404538

522 MADEIRA CORAL GABLES, FLORIDA 33134
(305) 461-5590 (305) 567-1425 FAX
EMAIL: JADLLARCH@AOL.COM

CONSULTANTS

STATE OF FLORIDA
JORGE ARTURO DE LA LLAMA
AR0007707
REGISTERED ARCHITECT

JORGE A. DE LA LLAMA
STATE OF FLORIDA - AR0007707
STATE OF COLORADO - ARC.00404538

PROJECT NAME

P8
PINECREST
EIGHT

13100 SW 80TH AVE
PINECREST, FLORIDA 33156

FILE NAME

JUNCO RESIDENCE

DATE
DEC 16, 2024

REVISION	DATE	BY

Jorge A. de la Llama

Digitally signed by Jorge A. de la Llama
DN: c=US, serialNumber=AATL202311273280(3), o=Jorge A. de la Llama, cn=Jorge A. de la Llama, email=jadllarch@aol.com
Date: 2025.01.14 20:58:52 -05'00'

DRAWING NAME

MECHANICAL PERMETER A/C

DESING BY:
ZECKY DA COSTA

DRAWN BY:
HUMBERTO LANTIGUA

SHEET N0.

M-4