THE CONTENTS OF THIS DOCUMENT, ITS DESIGNS AND DRAWINGS ARE THE COPYRIGHTED PROPERTY OF DE LA LLAMA + ASSOCIATES INC. AND MAY NOT BE REPRODUCED IN WHOLE OR IN PART WITHOUT THE EXPRESSED WRITTEN CONSENT OF DE LA LLAMA + ASSOCIATES, INC.
THE GENERAL CONTRACTOR AND ALL TRADES PERFORMING WORK ON THIS PROJECT SHALL BE EXCLUSIVELY RESPONSIBLE FOR VERIFYING ALL DIMENSIONS AND CONDITIONS WITH REPORTING ANY DISCREPANCIES TO THE DE LA LLAMA + ASSOCIATES, INC. BEFORE COMMENCING ANY WORK.

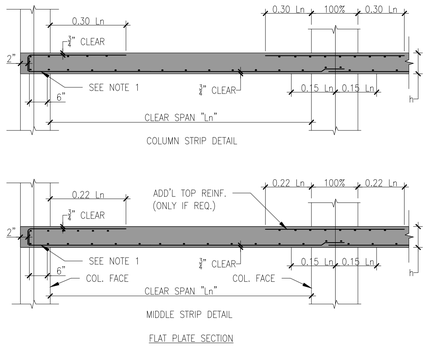

FLAT PLATE SECTION

NOTES:

1-INTEGRITY REINFORCEMENT IS REQUIRED (ACI 8.7.4.2.1). ALL BOTTOM BARS IN THE COLUMN STRIP MUST BE CONTINUOUS OR SPLICE OVER THE SUPPORT WITH CLASS "B" TENSION LAP SPLICE. AT LEAST TWO OF THE COLUMN STRIP BOTTOM BARS IN EACH DIRECTION MUST PASS WITHIN THE COLUMN AREA AND BE ANCHORED (HOOKED) AT EXTERIOR SUPPORTS.

2-60% OF TOP BARS SHALL BE CONCENTRATED WITHIN WIDTH OF THE COLUMN PLUS 1.5*h EACH SIDE OF COLUMN (ACI 8.4.2.3.2 AND 8.4.2.3.5). REMAINING TOP BARS SHALL BE DISTRIBUTED ALONG THE COLUMN STRIP WIDTH.

3-MAIN BOTTOM REINFORCING SHALL BE A CONTINUOUS MAT IN EACH DIRECTION.

4-AT LEAST 50% OF BOTTOM REINFORCING SHALL BE CONTINUOUS OVER SUPPORTS AND SPLICE SHALL BE MADE IN COLUMN LINE (U.N.O.)

5-ADD 2#5 CONTINUOUS EDGE BARS TOP & BOTTOM.

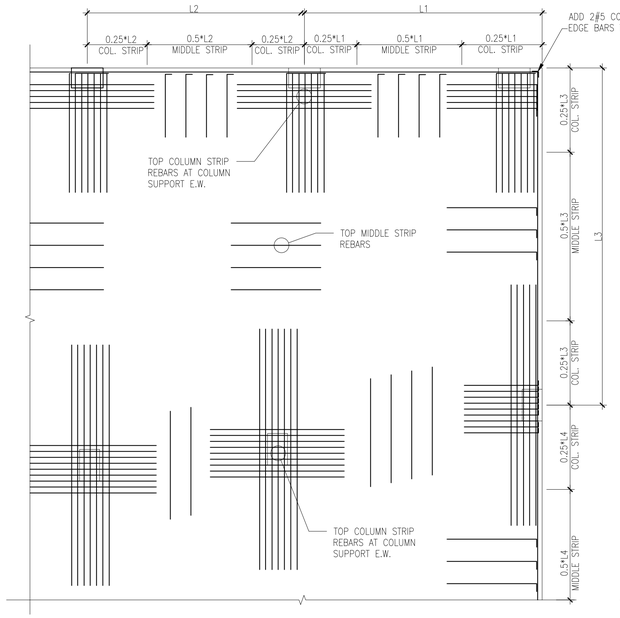

TOP REINFORCEMENT

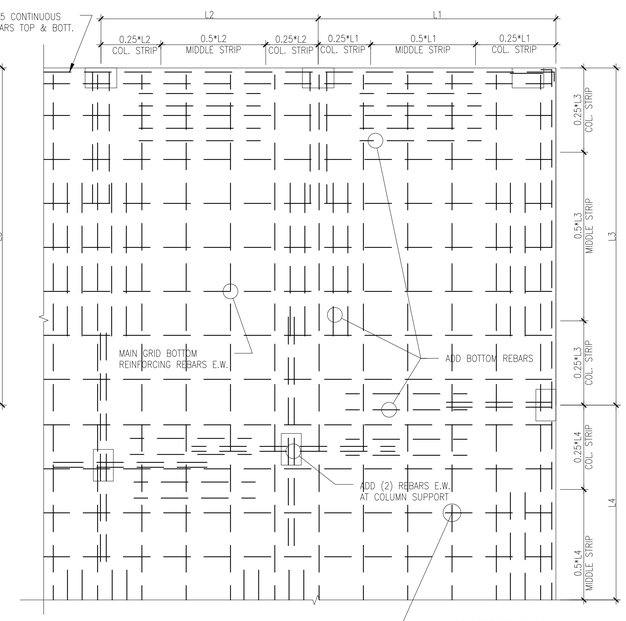

BOTTOM REINFORCEMENT

A TYP. FLAT PLATE REINF. PLACEMENT

S-4.1 SCALE: 1/2"=1'-0"

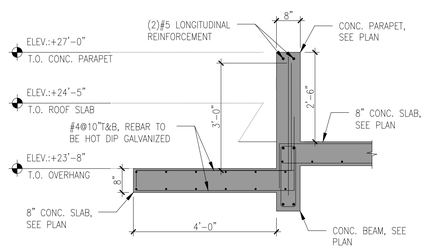

B OVERHANG DETAIL

S-4.1 SCALE: 1/2"=1'-0"

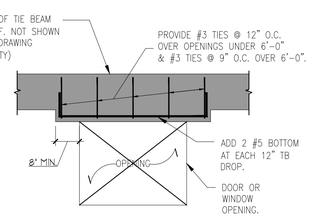

C DROPPED TIE-BEAM DETAIL

S-4.1 SCALE: 1/2"=1'-0"

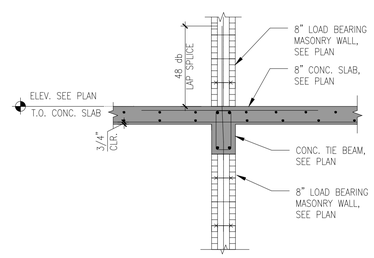

D MASONRY SHEAR WALL DETAIL

S-4.1 SCALE: 1/2"=1'-0"

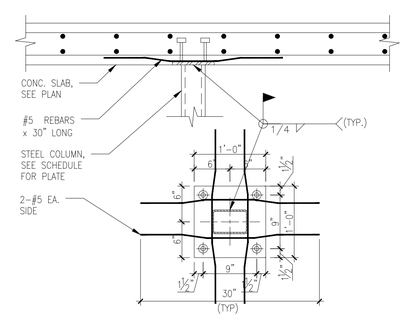

E STEEL COLUMN TO SLAB DETAIL

S-4.1 SCALE: 1"=1'-0"

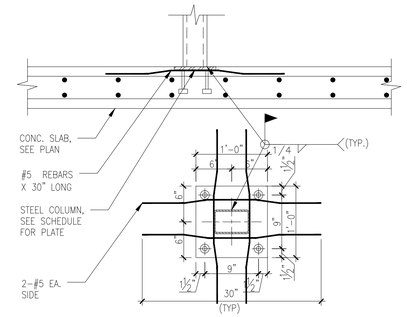

F STEEL COLUMN TO SLAB DETAIL

S-4.1 SCALE: 1"=1'-0"

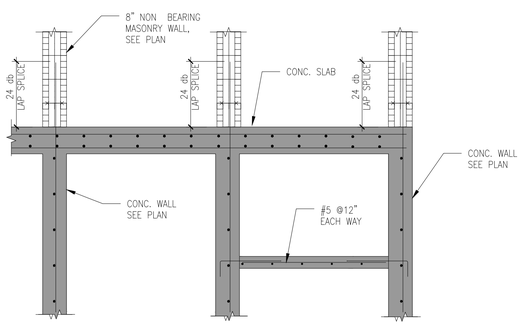

G DETAIL STAIR AT CONC. WALL

S-4.1 SCALE: 1/2"=1'-0"

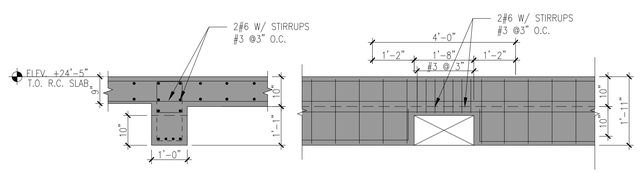

NOTE: THE DUCTO WILL BE PLACED ON BOTTOM OF BEAM NOT ON BOTTOM OF SLAB

H AC DUCT REINFORCING FOR RB-6

S-4.1 SCALE: 1/2"=1'-0"

COPYRIGHT RESERVED: THE COPYRIGHTS TO ALL DESIGNS AND DRAWINGS ARE THE PROPERTY OF EASTERN ENGINEERING GROUP. REPRODUCTION OR USE FOR ANY PURPOSE OTHER THAN THAT AUTHORIZED BY EASTERN ENGINEERING GROUP IS PROHIBITED.

THIS ITEM HAS BEEN DIGITALLY SIGNED AND SEALED BY RAISSA LOPEZ, PE, ON 11/07/2024 PRINTED COPIES OF THIS DOCUMENT ARE NOT CONSIDERED SIGNED AND SEALED AND THE SIGNATURE MUST BE VERIFIED ON ANY ELECTRONIC COPIES.

Eastern Engineering Group
3401 NW 82nd Avenue, Suite 370
Miami, FL 33122
(305) 599-8133
info@easternengr.com
www.easternengr.com
CA26956

TO THE BEST OF THE ENGINEERS KNOWLEDGE, THE PLANS AND SPECIFICATIONS COMPLY WITH THE APPLICABLE FLORIDA BUILDING CODES FOR STRUCTURAL REQUIREMENTS AT THE TIME OF THEIR PREPARATION AS DETERMINED BY THE LOCAL AUTHORITIES IN ACCORDANCE WITH THE PROVISIONS OF THE LATEST EDITION OF THE FLORIDA BUILDING CODE.

DE LA LLAMA
ARCHITECTURE
PLANNING
INTERIOR DESIGN

JORGE A. DE LA LLAMA
STATE OF FLORIDA - AR0007707
STATE OF COLORADO - ARC.00404538

522 MADEIRA CORAL GABLES , FLORIDA 33134
(305) 461-5590 (305) 567-1425 FAX
EMAIL : JADLLARCH@AOL.COM

CONSULTANTS

RAISSA R. LOPEZ LICENSE No 59399 STATE OF FLORIDA PROFESSIONAL ENGINEER
Raissa R. Lopez
2024.11.07 15:40:47 -05'00'

☐ *RAISSA LOPEZ, P.E. LIC No. 59399*

PROJECT NAME

P8
PINECREST EIGHT

13100 SW 80TH AVE
PINECREST, FLORIDA 33156

FILE NAME
24-0609

DATE
NOVEMBER 7TH, 2024

REVISION	DATE	BY

DRAWING NAME

DETAILS

DESING BY:
RAISSA LOPEZ

DRAWN BY:
N. C / A.G

SHEET NO.
S-4.1