THE CONTENTS OF THIS DOCUMENT, ITS DESIGNS AND DRAWINGS ARE THE COPYRIGHTED PROPERTY OF DE LA LLAMA + ASSOCIATES INC. AND MAY NOT BE REPRODUCED IN WHOLE OR IN PART WITHOUT THE EXPRESSED WRITTEN CONSENT OF DE LA LLAMA + ASSOCIATES, INC.
THE GENERAL CONTRACTOR AND ALL TRADES PERFORMING WORK ON THIS PROJECT SHALL BE EXCLUSIVELY RESPONSIBLE FOR VERIFYING ALL DIMENSIONS AND CONDITIONS WITH REPORTING ANY DISCREPANCIES TO THE DE LA LLAMA + ASSOCIATES, INC. BEFORE COMMENCING ANY WORK.

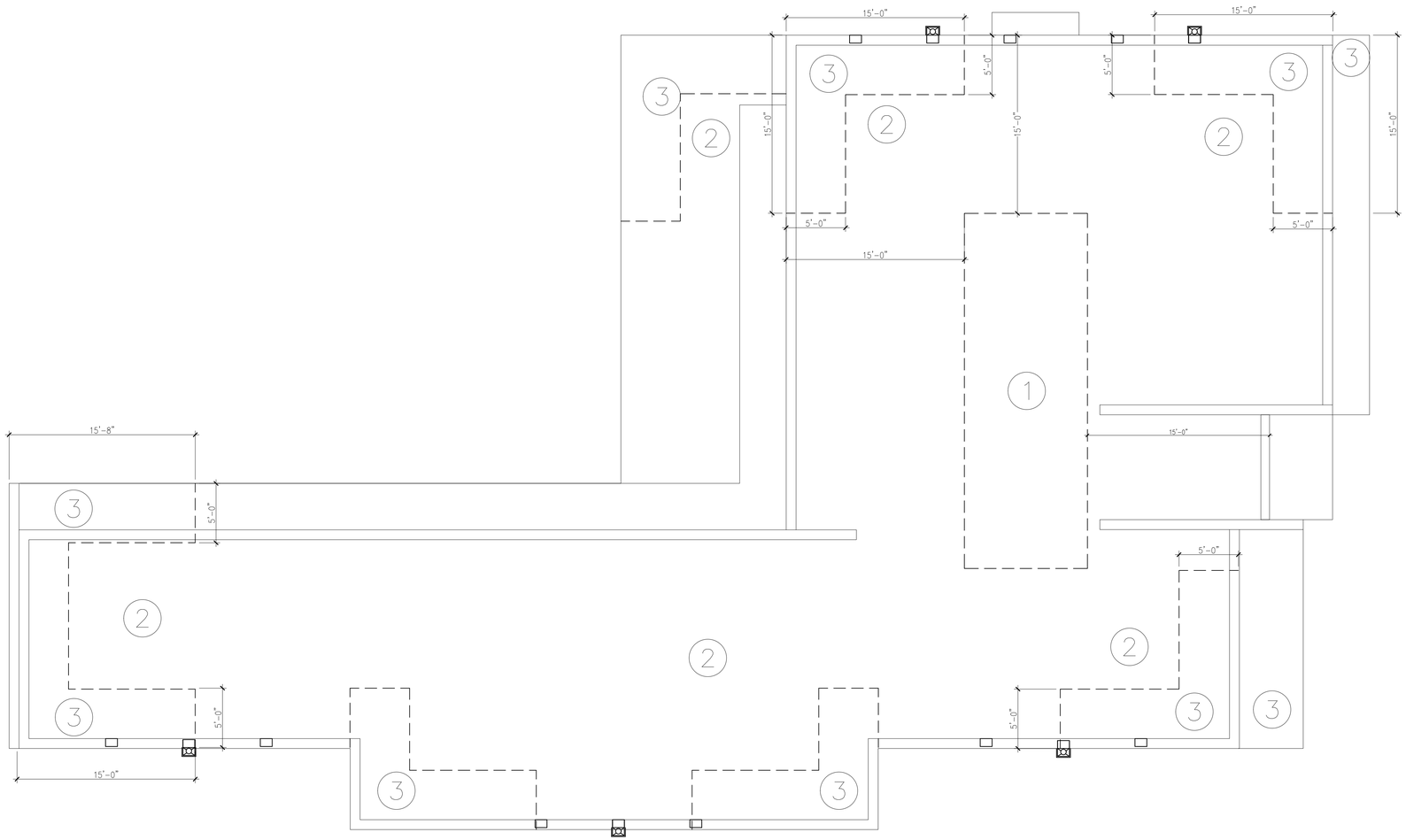

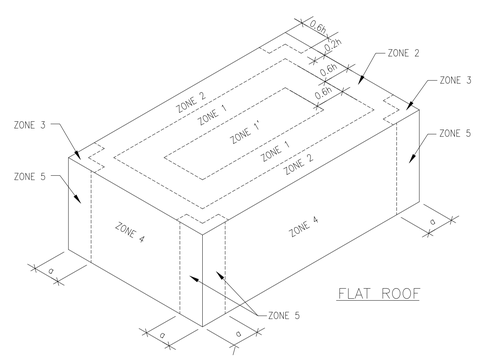

FLAT ROOF

24 0609 13100 SW 80 TH AVE, PINECREST, FL 33156
BUILDING MEAN ROOF HEIGHT: 25.00 FEET
BUILDING EXPOSURE COEFF. @ ROOF: Kh= 0.945
VELOCITY PRESSURE @ ROOF HEIGHT: qh=44.44 PSF
ROOF GUST FACTOR COEFF: Gh= 0.85
INTERNAL PRESSURE COEFF: GCpi=+/-0.18

FOR COMPONENTS AND CLADDING: WIND PRESSURE COEFF. ZONE:
a = 0.1 X WIDTH = 6 OR
a = 0.04 X LHD = 2.4 NOT LESS THAN
a = 3
USE a = 6.7 FEET

MAXIMUM VERTICAL (ASD) WIND LOAD (ROOF)

ZONE 1	
AREA	PRESSURE
10SF	-71.01PSF
20SF	-66.33PSF
50SF	-60.13PSF

ZONE 2	
AREA	PRESSURE
10SF	-93.67PSF
20SF	-87.65PSF
50SF	-79.69PSF

ZONE 1'	
AREA	PRESSURE
10SF	-40.79
20SF	-40.79
50SF	-40.79

ZONE 3	
AREA	PRESSURE
10SF	-127.67
20SF	-115.62
50SF	-99.70

MAXIMUM VERTICAL (ASD) WIND LOAD (OVERHANGS)

ZONE 2_OHS	
AREA	PRESSURE
10SF	-86.88 PSF
20SF	-78.84 PSF
50SF	-68.23 PSF

ZONE 3_OHS	
AREA	PRESSURE
10SF	-120.87 PSF
20SF	-106.82 PSF
50SF	-88.24 PSF

MAXIMUM HORIZONTAL (ASD) WIND LOAD (WALLS)

ZONE 4	
AREA	PRESSURE
10SF	-40.79PSF +44.19PSF
20SF	-38.99PSF +42.39PSF
50SF	-36.60 PSF +40.00PSF

ZONE 5	
AREA	PRESSURE
10SF	-40.79 PSF +54.39PSF
20SF	-38.99 PSF +50.78PSF
50SF	-36.60 PSF +46.00PSF

COPYRIGHT RESERVED: THE COPYRIGHTS TO ALL DESIGNS AND DRAWINGS ARE THE PROPERTY OF EASTERN ENGINEERING GROUP. REPRODUCTION OR USE FOR ANY PURPOSE OTHER THAN THAT AUTHORIZED BY EASTERN ENGINEERING GROUP IS PROHIBITED.

THIS ITEM HAS BEEN DIGITALLY SIGNED AND SEALED BY RAISSA LOPEZ, PE. ON 11/07/2024 PRINTED COPIES OF THIS DOCUMENT ARE NOT CONSIDERED SIGNED AND SEALED AND THE SIGNATURE MUST BE VERIFIED ON ANY ELECTRONIC COPIES.

Eastern Engineering Group
3401 NW 82nd Avenue, Suite 370
Miami, FL 33122
(305) 599-8133
info@easterneng.com
www.easternengi.com
CA#26555

TO THE BEST OF THE ENGINEERS' KNOWLEDGE, THE PLANS AND SPECIFICATIONS CONFORM TO THE MINIMUM STRUCTURAL REQUIREMENTS OF THE FLORIDA BUILDING CODE FOR STRUCTURAL REQUIREMENTS AT THE TIME OF SHEET PREPARATION AS DETERMINED BY THE LOCAL AUTHORITIES IN ACCORDANCE WITH THE PROVISIONS OF THE LATEST EDITION OF THE FLORIDA BUILDING CODE.

DE LA LLAMA
ARCHITECTURE
PLANNING
INTERIOR DESIGN

JORGE A. DE LA LLAMA
STATE OF FLORIDA - AR0007707
STATE OF COLORADO - ARC.00404538

522 MADEIRA CORAL GABLES , FLORIDA 33134
(305) 461-5590 (305) 567-1425 FAX
EMAIL : JADLLARCH@AOL.COM

CONSULTANTS

RAISSA R. LOPEZ LICENSE No 59399 STATE OF FLORIDA PROFESSIONAL ENGINEER
Raissa R. Lopez
2024.11.07 09:40:49 -05'00'

RAISSA LOPEZ, P.E. LIC No. 59399

PROJECT NAME

P8
PINECREST
EIGHT

13100 SW 80TH AVE
PINECREST, FLORIDA 33156

FILE NAME
24-0609

DATE
NOVEMBER 7TH, 2024

REVISION	DATE	BY

DRAWING NAME
ROOF WIND PRESSURES

DESING BY:
RAISSA LOPEZ

DRAWN BY:
N. C / A.G

SHEET NO.
S-5.2