THE CONTENTS OF THIS DOCUMENT, ITS DESIGNS AND DRAWINGS ARE THE COPYRIGHTED PROPERTY OF DE LA LLAMA + ASSOCIATES INC. AND MAY NOT BE REPRODUCED IN WHOLE OR IN PART WITHOUT THE EXPRESSED WRITTEN CONSENT OF DE LA LLAMA + ASSOCIATES, INC.
THE GENERAL CONTRACTOR AND ALL TRADES PERFORMING WORK ON THIS PROJECT SHALL BE EXCLUSIVELY RESPONSIBLE FOR VERIFYING ALL DIMENSIONS AND CONDITIONS WITH REPORTING ANY DISCREPANCIES TO THE DE LA LLAMA + ASSOCIATES, INC, BEFORE COMMENCING ANY WORK.

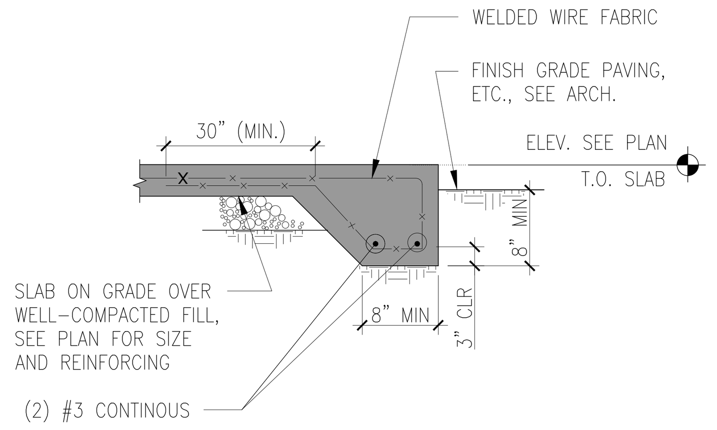

A S-4.0 TYP. THICKENED EDGE DETAIL
SCALE: 1/2"=1'-0"

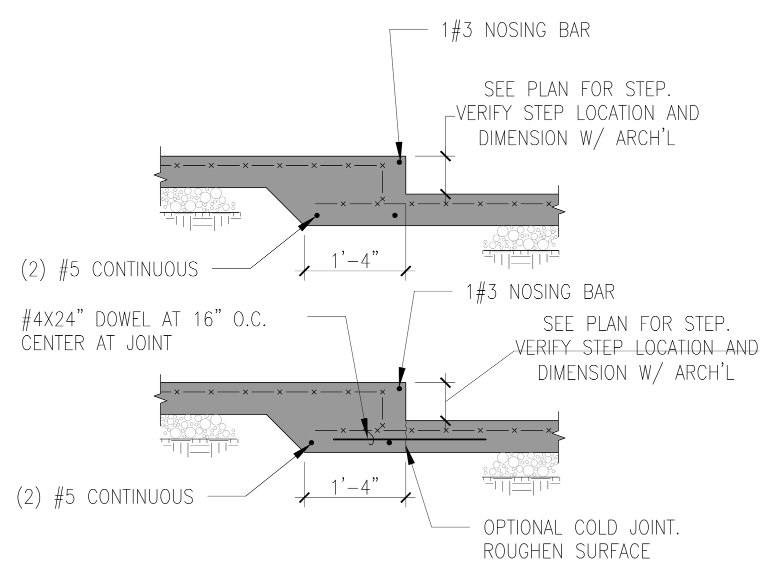

B S-4.0 STEP AT SLAB-ON-GRADE
SCALE: 1/2"=1'-0"

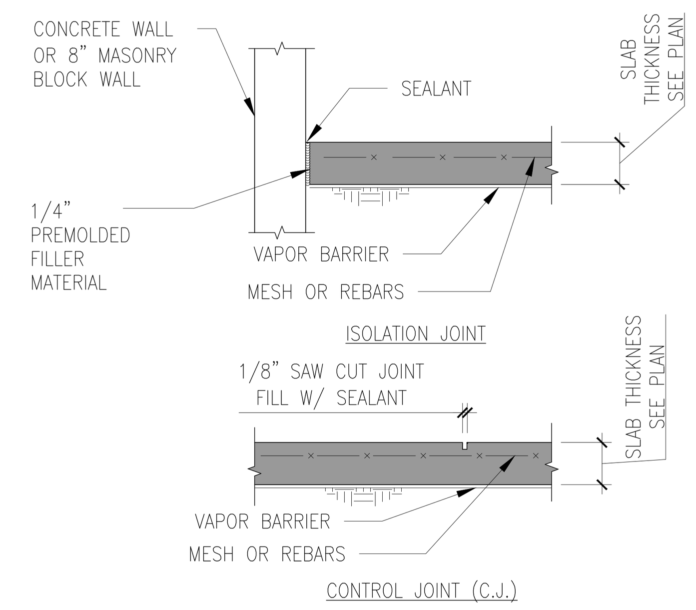

C S-4.0 TYP. SLAB CONTROL JOINTS
SCALE: 1/2"=1'-0"

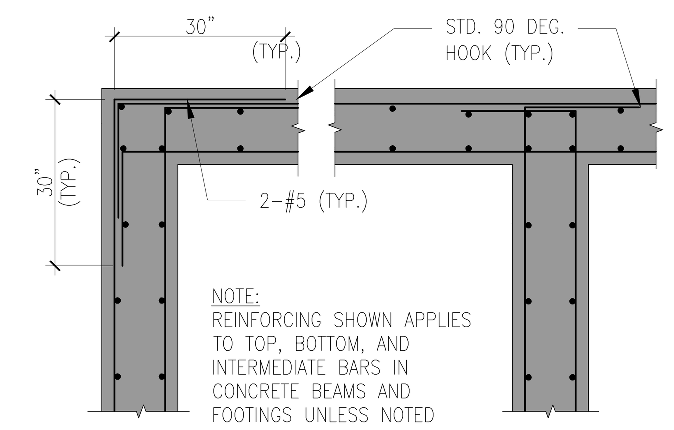

D S-4.0 TYP. CORNER BARS DETAIL FOR BEAMS & FOOTINGS
SCALE: 1/2"=1'-0"

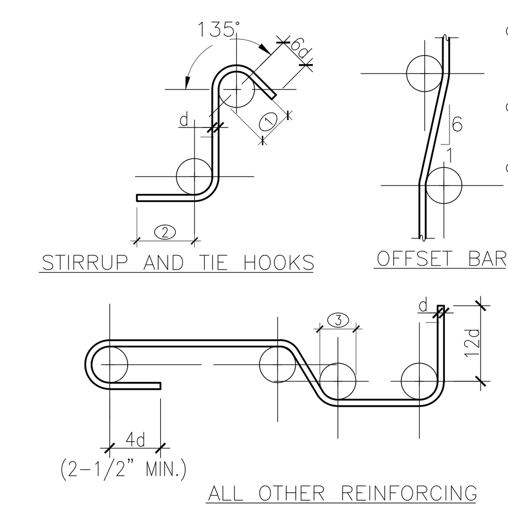

1. MINIMUM FINISHED BEND DIAMETER 4d FOR #5 BAR AND SMALLER, 6d FOR #6 THRU #8. TYPICAL FOR STIRRUPS AND TIES ONLY
2. 6d FOR #5 AND SMALLER 12d FOR #6 THRU #8
3. MINIMUM FINISHED BEND DIAMETER 6d UP TO #8 BAR, 8d FOR #9 THRU #11, 12d FOR #14 AND #18. TYPICAL FOR ALL REINFORCING EXCEPT STIRRUPS AND TIES

NOTE:
1. d = BAR DIAMETER
2. ALL REINFORCEMENT SHALL BE BENT COLD UNLESS NOTED OTHERWISE ON PLANS OR DETAILS
3. REINFORCING PARTIALLY EMBEDDED IN CONCRETE SHALL NOT BE FIELD BENT UNLESS SPECIFICALLY NOTED ON PLANS OR DETAILS

E S-4.0 STANDARD REBAR BENDING DETAILS
SCALE: 1/2"=1'-0"

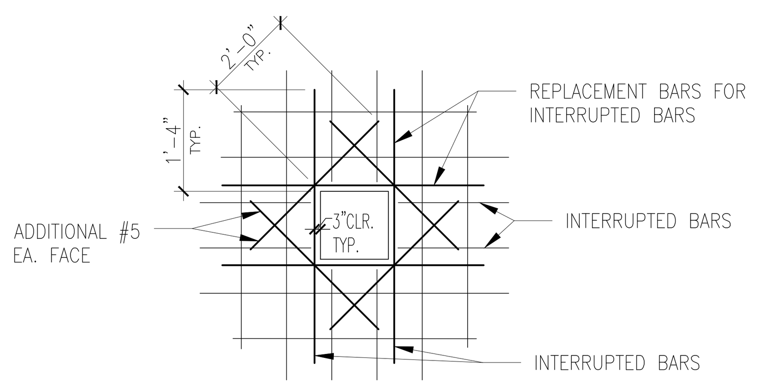

NOTE:
1. USE THIS DETAIL FOR ALL OPENINGS IN CONCRETE WALLS AND SLABS GREATER THAN 8", PROVIDE 2-#5's ON DIAGONAL AT EACH CORNER AS SHOWN. EXTEND BARS 47 BAR DIAM. OR 2'-0" PAST OPENING. REPLACE ALL VERTICAL AND HORIZONTAL BARS INTERUPTED BY THE OPENING WITH AN EQUAL NUMBER AND SIZE BARS EVENLY DIVIDED ON EACH SIDE OF THE OPENING UNLESS NOTED OTHERWISE.
2. REFER TO PLANS FOR ALL OPENING LOCATIONS.

F S-4.0 OPENING IN CONCRETE SLAB
SCALE: 1/2"=1'-0"

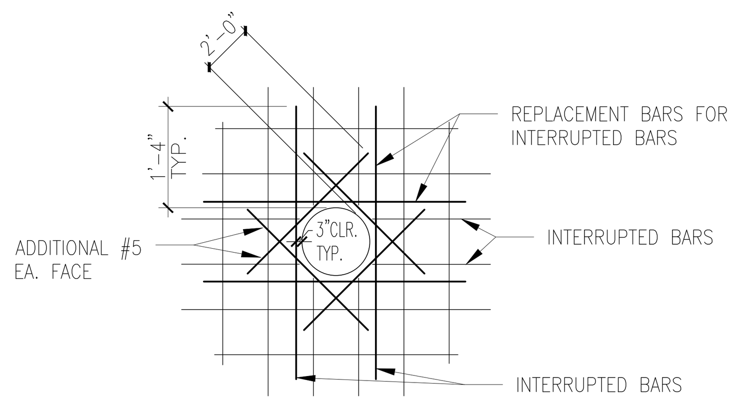

NOTE:
1. USE THIS DETAIL FOR ALL OPENINGS IN CONCRETE WALLS AND SLABS GREATER THAN 8", PROVIDE 2-#5's ON DIAGONAL AT EACH CORNER AS SHOWN. EXTEND BARS 47 BAR DIAM. OR 2'-0" PAST OPENING. REPLACE ALL VERTICAL AND HORIZONTAL BARS INTERUPTED BY THE OPENING WITH AN EQUAL NUMBER AND SIZE BARS EVENLY DIVIDED ON EACH SIDE OF THE OPENING UNLESS NOTED OTHERWISE.
2. REFER TO PLANS FOR ALL OPENING LOCATIONS.

G S-4.0 OPENING IN CONC. SLAB
SCALE: 1/2"=1'-0"

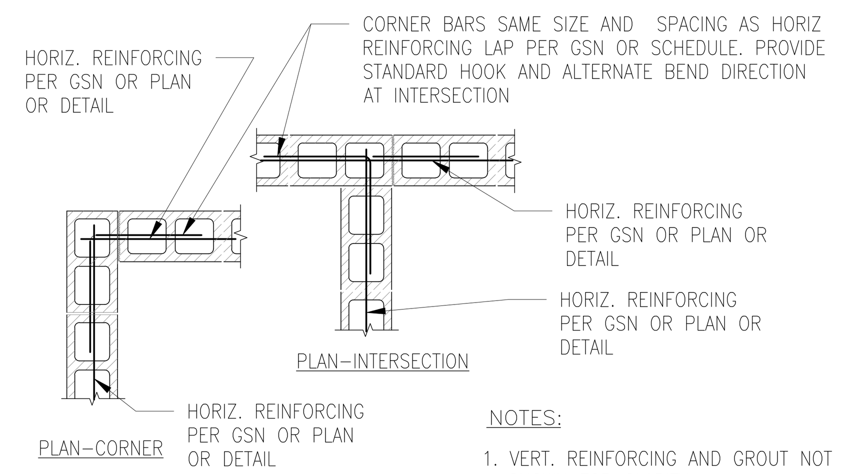

NOTES:
1. VERT. REINFORCING AND GROUT NOT SHOWN FOR CLARITY.
2. AT DOUBLE HORZ. REINFORCING PROVIDE CORNER BAR FOR EACH HORIZ. BAR (TYPICAL).

H S-4.0 TYP. CORNER REINF. IN MASONRY
SCALE: 1/2"=1'-0"

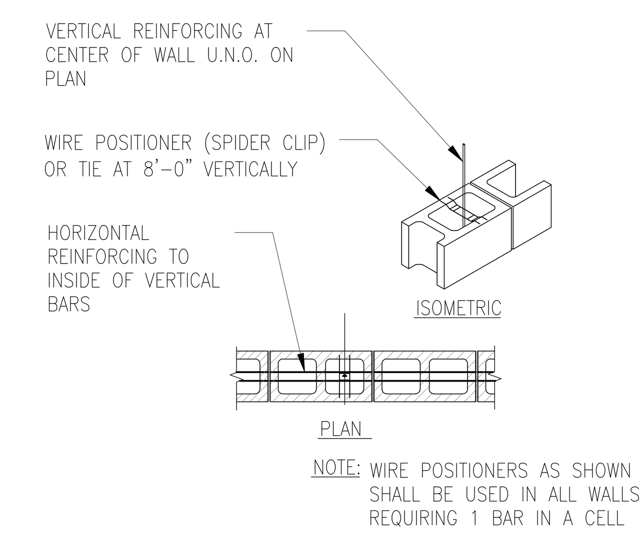

NOTE: WIRE POSITIONERS AS SHOWN SHALL BE USED IN ALL WALLS REQUIRING 1 BAR IN A CELL

J S-4.0 VERTICAL REINF. IN MASONRY
SCALE: 1/2"=1'-0"

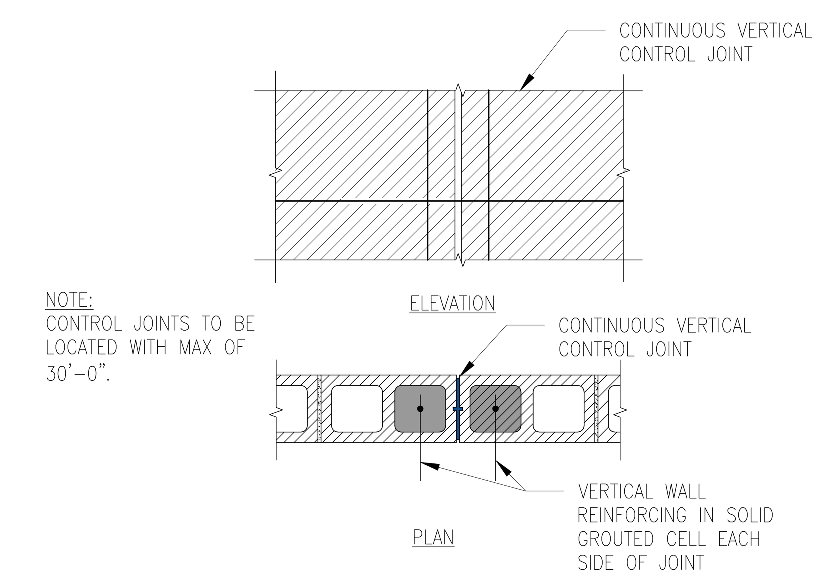

NOTE:
CONTROL JOINTS TO BE LOCATED WITH MAX OF 30'-0".

K S-4.0 TYP. CONTROL JOINT IN MASONRY WALL
SCALE: 1/2"=1'-0"

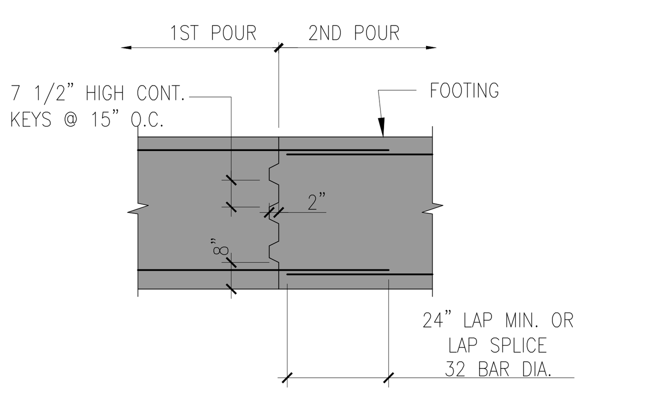

NOTE:
WELDED SPLICES REQ'D FOR #14 & LARGER BARS. WHERE CONT. FOOTING IS UNDER A WALL LOCATE CONSTRUCTION JOINT AT 1/4 OF THE CLEAR OPENING WIDTH ABOVE FROM FACE OF OPENING, OR IN MIDDLE 1/3 OF THE DISTANCE BETWEEN COLUMNS.

L S-4.0 TYP. FOOTING CONST. JOINT
SCALE: 1/2"=1'-0"

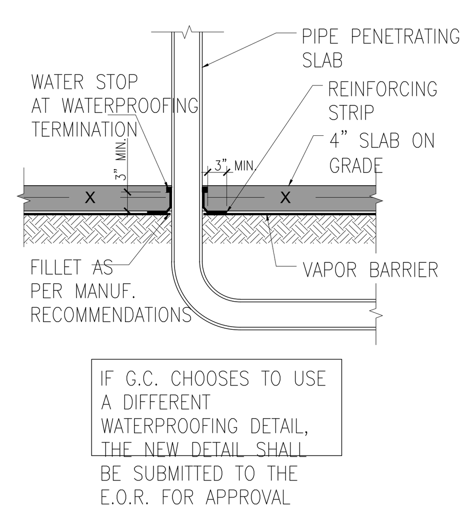

M S-4.0 SLAB ON GRADE PENETRATION
SCALE: 1/2"=1'-0"

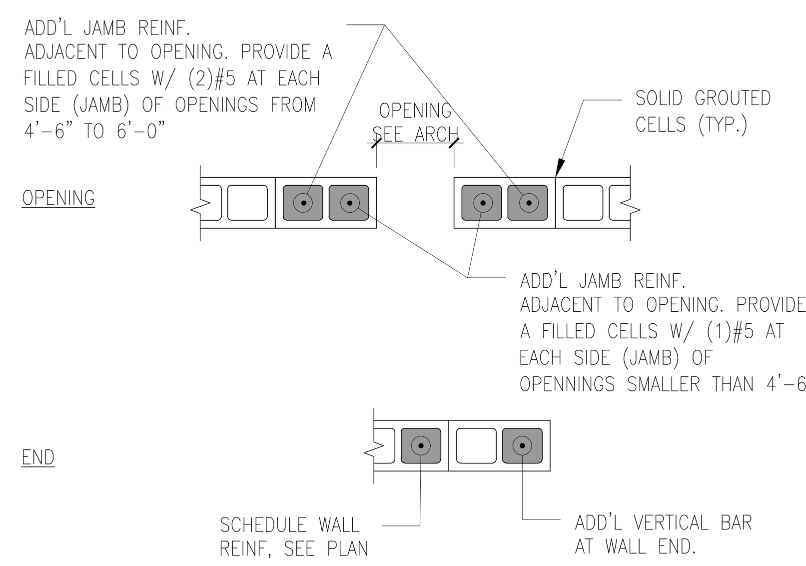

N S-4.0 TYPICAL OPENING AND END DETAILS
SCALE: 1/2"=1'-0"

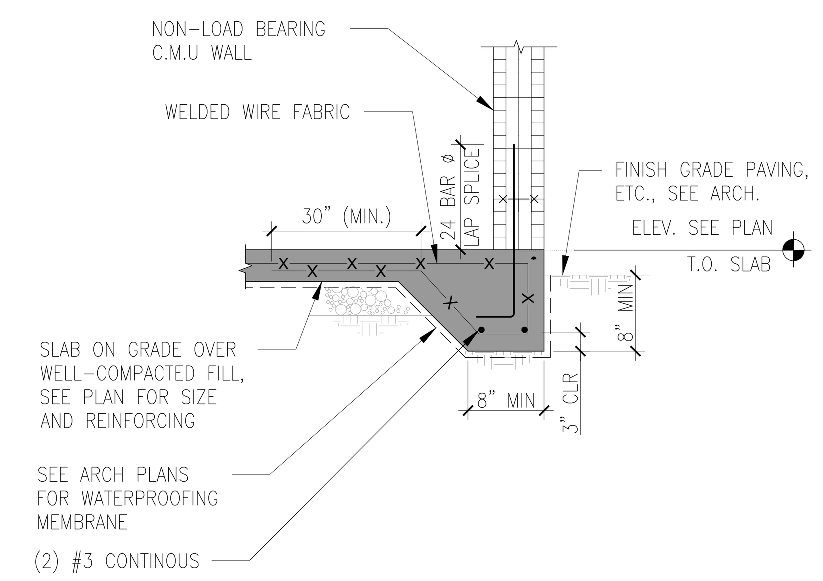

P S-4.0 TYP. THICKENED EDGE DETAIL
SCALE: 1/2"=1'-0"

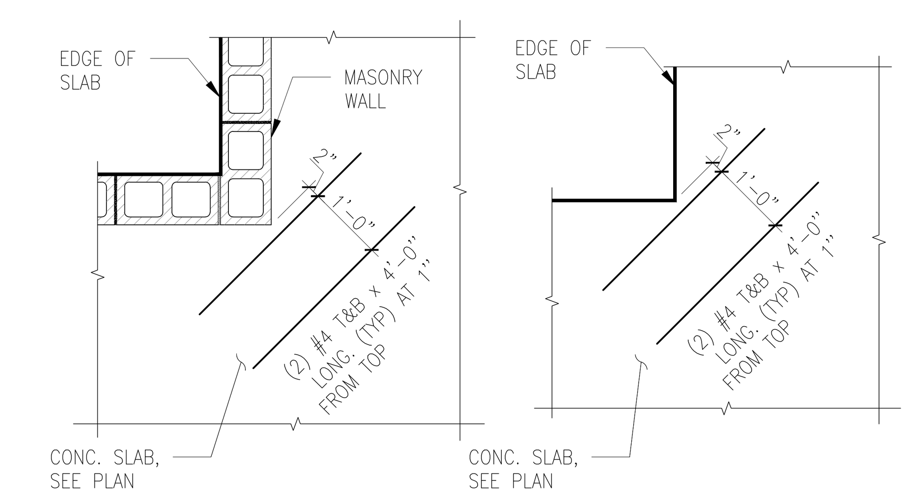

Q S-4.0 REENTRANT CORNER DETAIL
SCALE: 1/2"=1'-0"

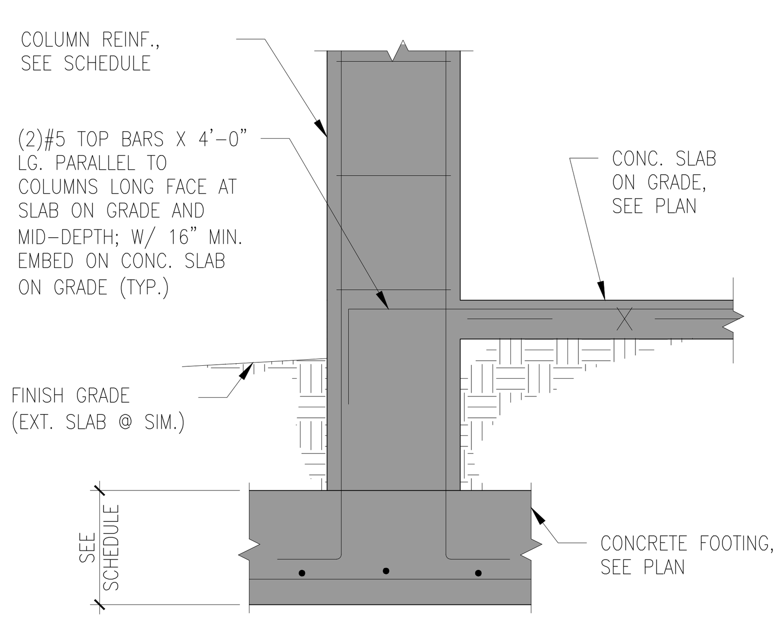

R S-4.0 COLUMN BRACING DETAIL
SCALE: 3/4"=1'-0"

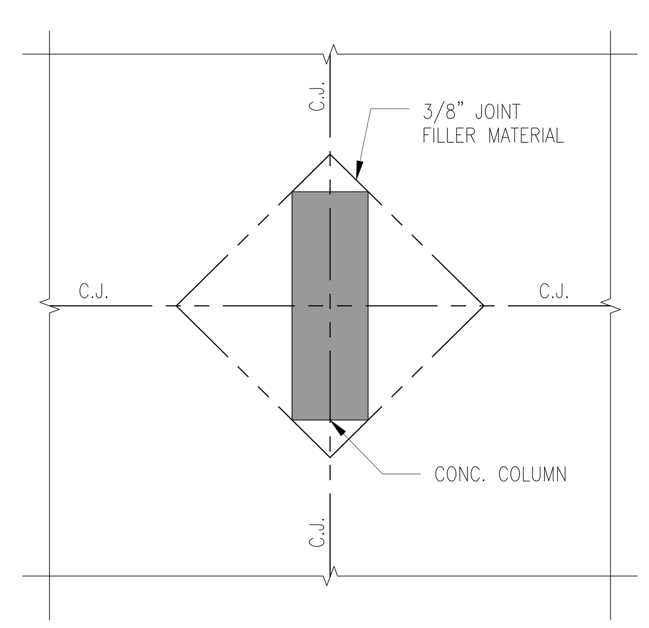

S S-4.0 TYPICAL CONTROL JOINT AROUND COLUMN DETAIL
SCALE: 1/2"=1'-0"

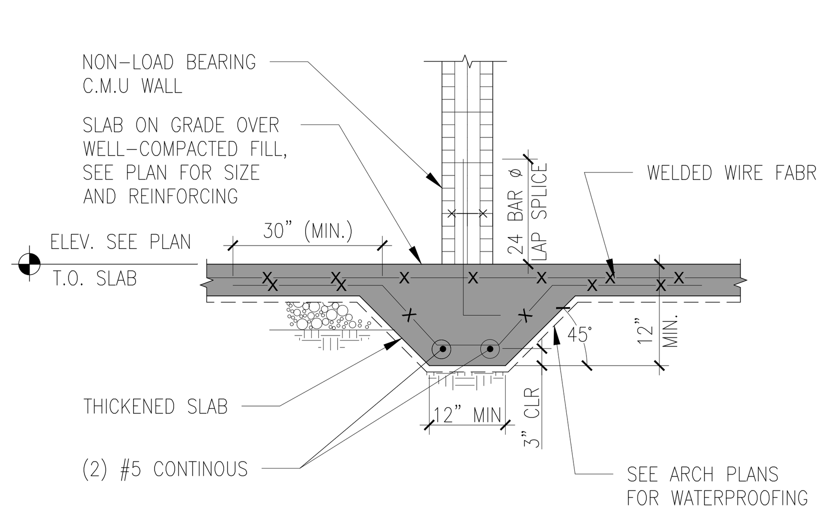

T S-4.0 TYPICAL THICKENED SLAB AT NON-LOAD BEARING WALL
SCALE: 1/2"=1'-0"

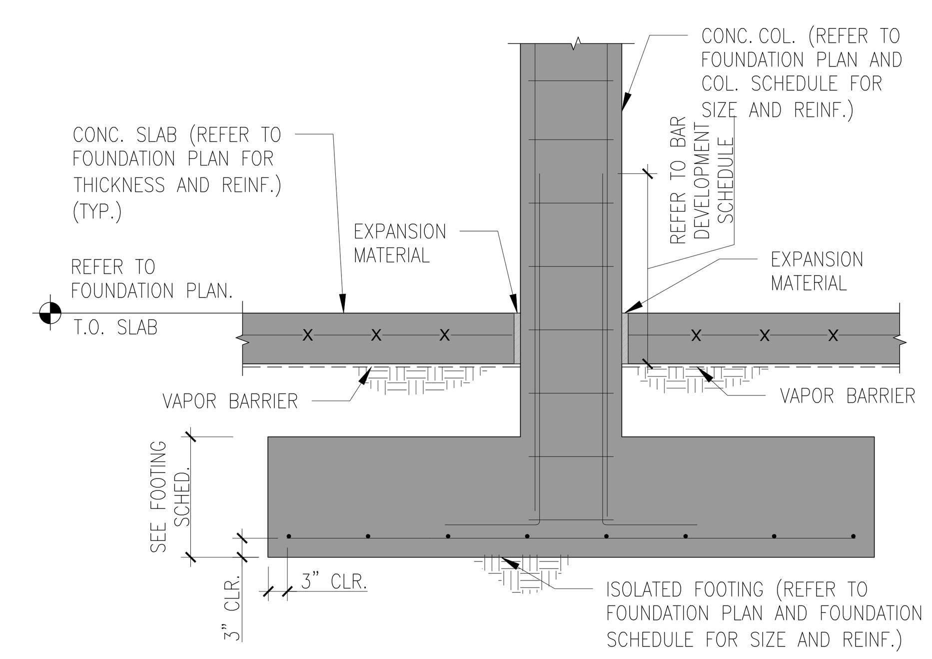

U S-4.0 TYP. ISOLATED CONC. FOOTING
SCALE: 1/2"=1'-0"

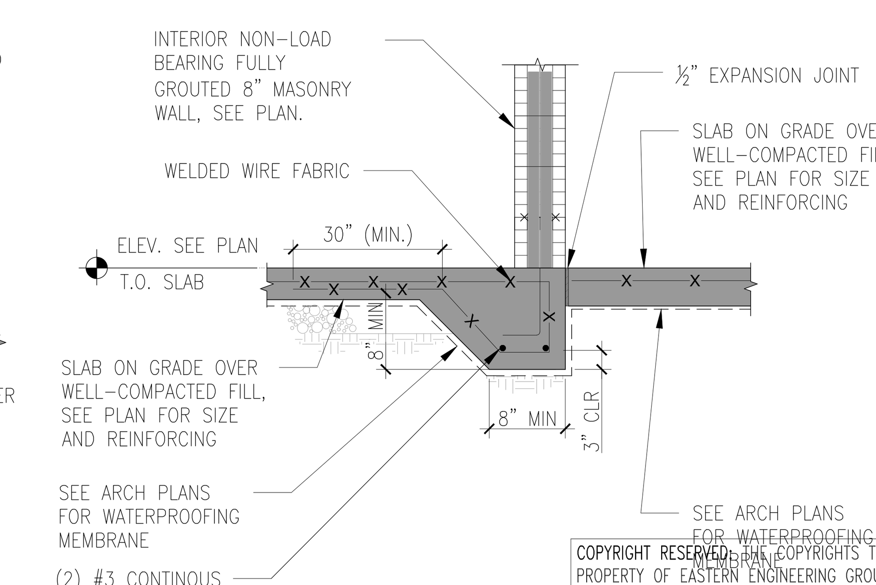

V S-4.0 TYP. THICKENED EDGE DETAIL FOR DOMESTIC & FIRE PUMP ROOM
SCALE: 1/2"=1'-0"

COPYRIGHT RESERVED: THE COPYRIGHTS TO ALL DESIGNS AND DRAWINGS ARE THE PROPERTY OF EASTERN ENGINEERING GROUP. REPRODUCTION OR USE FOR ANY PURPOSE OTHER THAN THAT AUTHORIZED BY EASTERN ENGINEERING GROUP IS PROHIBITED.
THIS ITEM HAS BEEN DIGITALLY SIGNED AND SEALED BY RAISSA LOPEZ, PE. ON 11/07/2024 PRINTED COPIES OF THIS DOCUMENT ARE NOT CONSIDERED SIGNED AND SEALED AND THE SIGNATURE MUST BE VERIFIED ON ANY ELECTRONIC COPIES.

Eastern Engineering Group
3401 NW 82nd Avenue, Suite 370
Miami, FL 33122
(305) 599-8133
info@easterneg.com
www.easterneg.com
CA#26655

TO THE BEST OF THE ENGINEERS' KNOWLEDGE, THE PLANS AND SPECIFICATIONS COMPLY WITH THE APPLICABLE MINIMUM BUILDING CODES FOR STRUCTURAL REQUIREMENTS AT THE TIME OF THEIR PREPARATION AS DETERMINED BY THE LOCAL AUTHORITIES IN ACCORDANCE WITH THE PROVISIONS OF THE LATEST EDITION OF THE FLORIDA BUILDING CODE.

DE LA LLAMA
ARCHITECTURE PLANNING INTERIOR DESIGN

JORGE A. DE LA LLAMA
STATE OF FLORIDA - AR0007707
STATE OF COLORADO - ARC.00404538
522 MADEIRA CORAL GABLES , FLORIDA 33134
(305) 461-5590 (305) 567-1425 FAX
EMAIL : JADLLARCH@AOL.COM

CONSULTANTS

RAISSA R. LOPEZ LICENSE No 59399 STATE OF FLORIDA PROFESSIONAL ENGINEER
Raissa R Lopez
2024.12.10 15:20:47-05'00'

RAISSA LOPEZ, P.E. LIC No. 59399

PROJECT NAME

P8
PINECREST EIGHT

13100 SW 80TH AVE
PINECREST, FLORIDA 33156

FILE NAME
24-0609

DATE
NOVEMBER 7TH, 2024

REVISION	DATE	BY

DRAWING NAME
DETAILS

DESING BY:
RAISSA LOPEZ

DRAWN BY:
N. C / A.G

SHEET N0.
S-4.0