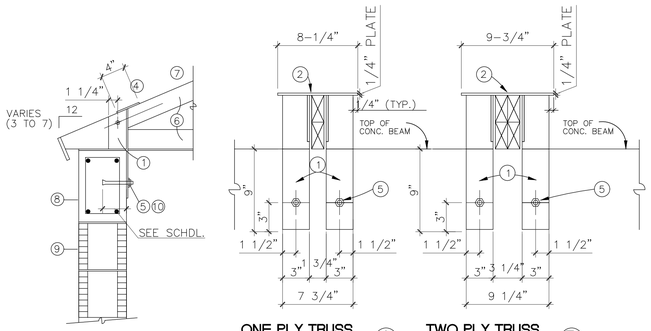

SECTION
1 " = 1'-0"

ONE PLY TRUSS (A)
(MAX. UPLIFT = 3,000 #)

TWO PLY TRUSS (B)
(MAX. UPLIFT = 5,800 #)

GIRDER TRUSS ANCHORAGE DETAIL 1 / S104
N.T.S.

SCHEDULE

MARK	DESCRIPTION	MARK	DESCRIPTION
1	ANGLE 3X3X1/4" W/ EXTENDED LEG (FY=36 KSI) SEE DRWG.	7	MIN. 5/8"EXT. GRADE PLYWOOD, SEE PLAN FOR NAILING REQUIREMENTS
2	STEEL PLATE 9-3/4"X4"X1/4" (FY=36KI)	8	MIN. 8"X12" CONC. TIE BEAM (FC=3000 PSI MIN.
3	CONCRETE MASONRY BLOCK.	9	CONCRETE MASONRY BLOCK.
4	ONE (1) 5/8" DIA. THRU BOLT FOR TWO PLY TRUSS.		
5	5/8" DIA. HILTI KWIK BOLT II (CARBON STEEL) 2 REQ'D X 4" EMBED.		
6	PREFABRICATED TWO OR THREE PLY TRUSS		

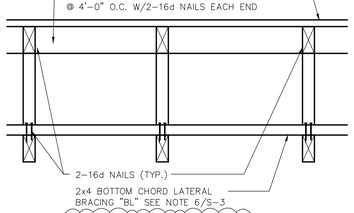

WOOD BLOCKING DETAIL
DETAIL B/S104 N.T.S.

ROOF PLAN NOTES

1) SUPER IMPOSED LOADS
DL = 25 PSF +200# @ TRUSSES BOTTOM CHORD PANEL POINTS
LL = 30 PSF
NET UPLIFT = 33 PSF (ZONE 1)
54 PSF (ZONE 2)

2) FOR CONNECTION OF PREFAB. WOOD TRUSSES TO CONCRETE SEE WOOD TRUSSES CONNECTOR SCHEDULE THIS SHEET

3) FOR SHEATHING OVER PREFAB WOOD TRUSSES PROVIDE MIN. 3/4" CDX PLYWOOD SHEATHING W/ 10d NAILS @ 4" O.C. ALONG EDGES & ALL SUPPORTING TRUSSES

4) FOR ALL EXTERIOR SOFFITS INCLUDING OVERHANGS GREATER THAN 24" PROVIDE MIN. 5/8" PLYWOOD SHEATHING W/ 10d NAILS @ 6" ALONG EDGES & @ ALL SUPPORTING TRUSSES BOTTOM CORDS.

5) FOR ALL PIGGY BACKS PROVIDE NVHTA16 GALV. STRAP BY BY NUE-VUE @ EACH TRUSS W/ 12 - 16d NAILS @ EACH MEMBER M.D. NOA 07-0306.10

6) PROVIDE 2X4 BOTT. CHORD LATERAL CONT. BRACING @ TRUSS PANEL POINTS OR 10'-0" O.C. W/ 2 - 16d NAILS @ EACH EACH TRUSS. (BL)

7) DROP TB ABOVE OPENING W/ #3 TIES @ 8" O.C. SEE DETAIL SHEET SGN

8) L"A" DENOTES (2) 2x8 P.T. WOOD LEDGER W/ 5/8" ø x 4" PENETRATION KB3 BY HILTI @ 12" O.C. INTO SOLID CONCRETE OR FULLY GROUTED BLOCK CELL

9) L"B" DENOTES 2x6 P.T. WOOD LEDGER W/ 5/8" ø x 4" PENET. KB3 BY HILTI @ 24" O.C.

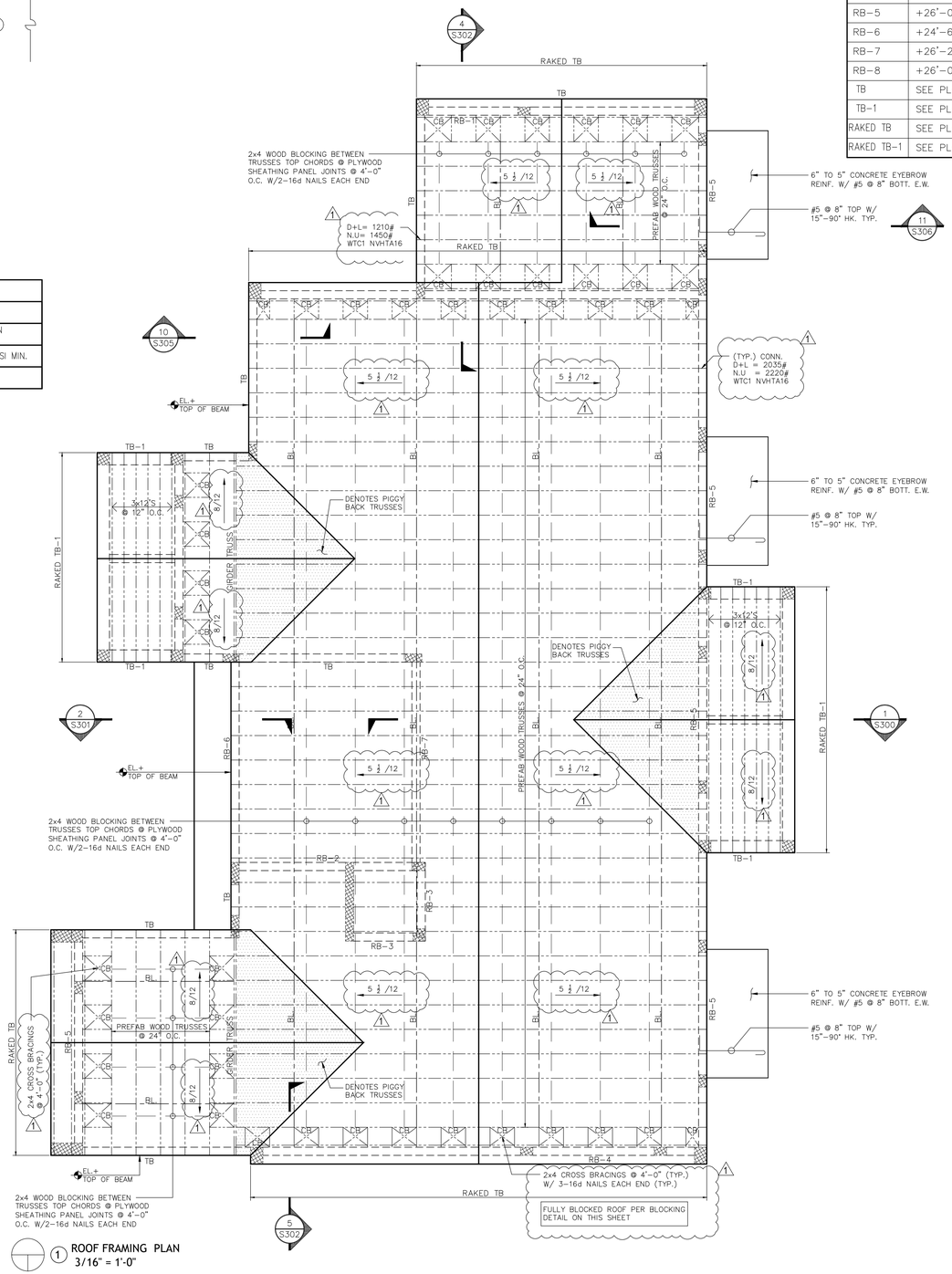

1 ROOF FRAMING PLAN
3/16" = 1'-0"

ROOF CONCRETE BEAM SCHEDULE

MARK	TOP ELEV.	SIZE WxH	REINFORCING BOTT.	REINFORCING CONT. TOP	C	E	I	TIES OR STIRRUPS NO.	TYPE	SPACING	REMARKS
RB-1	+26'-8"	8"x26"	2 #6	2 #6			1 #5	#3	□	@ 6" O.C.	
RB-2	+26'-0"	8"x18"	2 #6	2 #6				#3	□	@ 6" O.C.	
RB-3	+26'-0"	8"x18"	2 #5	2 #5				#3	□	@ 8" O.C.	
RB-4	+26'-2"	8"x20"	2 #7	2 #7				#3	□	@ 6" O.C.	
RB-5	+26'-0"	8"x18"	2 #6	2 #6				#3	□	@ 6" O.C.	
RB-6	+24'-6"	8"x18"	2 #8	2 #7				#3	□	@ 6" O.C.	
RB-7	+26'-2"	8"x26"	2 #8	2 #8			1 #5	#3	□	@ 6" O.C.	
RB-8	+26'-0"	8"x18"	2 #8	2 #8				#4	□	@ 6" O.C.	
TB	SEE PLAN	8"x12"	2 #5	2 #5				#3	□	@ 12" O.C.	1#5 TOP&BOTT. CORNER BARS 2'-6"x2'-6"
TB-1	SEE PLAN	12"x12"	3 #5	3 #5				#3	□	@ 12" O.C.	
RAKED TB	SEE PLAN	8"x12"	2 #6	2 #6				#3	□	@ 12" O.C.	
RAKED TB-1	SEE PLAN	12"x12"	3 #5	3 #5				#3	□	@ 12" O.C.	

W.T.C1 NVHTA-16H BY NU-VUE W/ 16-10d NAILS IN 2 STRAPS AND 6-10d NAILS TO SEAT, NOA 17-080207

W.T.C2 NVSTA-16H BY NU-VUE W/ 8-10d NAILS IN STRAP AND 6-10d NAILS TO SEAT, NOA 17-080207

W.T.C3 NVTH-20 BY NU-VUE W/ 08-10d x1.5" NAILS IN STRAPS, NOA 17-080207

NOTE: TRUSS MANUFACTORY SHALL CONSIDER IN THE DESIGN IN THE ADDITION TO THE DEAD LOAD A CONCENTRATED LOAD NOT LESS THAN 200 LBS AT ANY SINGLE PANEL POINTOF THE LOWER CHORD OF ROOF TRUSSES AS PER F.B.C. SECTION R4403.4.3

"R" DEAD LOAD PLUS LIVE LOAD GIRDER TRUSS REACTION.

"U" NET WIND UPLIFT GIRDER TRUSS REACTION

"CB" 2x4 WOOD "CROSS" BRACING CONNECTED TO TRUSSES AT SEAT EACH CONTACT POINT W/ 3-16d NAILS ECH END TYPICAL. SEE TRUSS MANUFACTURER SHOP DRAWINGS AND CALCULATIONS FOR ADDITIONAL CHORD AND WEB BRACING.

"BL" 2x4 CONTINUOUS HORIZONTAL WOOD BOTTOM CHORD BRACING CONNECTED TO THE TOP OF EVERY TRUSS BOTTOM CHORD W/ 2-8d NAILS. MAXIMUM SPACING BETWEEN BRACING SHALL BE 10'-0" SEE TRUSS MANUFACTURER TO COORDINATE TRUSS BOTTOM CHORD ELEVATION W/ ARCHITECHTURAL DRAWINGS.

DESIGN CRITERIA:
- CODE REF. : FLORIDA BUILDING CODE 2023 8TH. EDITION.
- ASCE 7-22
- 185 MPH WIND VELOCITY
- COEFFICIENT OF INTERNAL PRESSURE OF 0.18
- EXPOSURE "D"
- Kd FACTOR = 0.85
- ROOF STRUCTURE DESIGNED BASED ON COMPONENTS & CLADDING

Digitally signed by Zvonimir Belfranin
DN: c=US, o=Zvonimir Belfranin, dnQualifier=A01410D0000001926C393A9E00006B45, cn=Zvonimir Belfranin
Date: 2025.03.20 07:35:01 -04'00'

Zvonimir T. Belfranin, P.E.
Consulting Structural Engineer
P.E. # 33074
4836 S.W. 74 CT.,MIAMI, FLORIDA 33155
(305) 669-0255
BELFRANIN@AOL.COM

RESIDENCE: GS JPD 10635 LLC

10635 SW 63 AV
MIAMI, FL

SEAL

BALLI-TRAUTMAN ARCHITECTS LLC -AA26002968

GIORGIO LUIGI BALLI -AR13951
DAVID SCOTT TRAUTMAN -AR15045

REVISIONS

NO.	DESC	DATE
1	COMMENTS	3-19-2025

BALLI - TRAUTMAN
ARCHITECTURE INTERIORS CONSTRUCTION

JOB NUMBER:	
CHECKED BY:	GB
ISSUE DATE:	Issue Date
SCALE:	AS NOTED

SHEET TITLE

ROOF FRAMING PLAN

SHEET NUMBER

S104

COPYRIGHT BALLI-TRAUTMAN ARCHITECTS, LLC
1533 SUNSET DRIVE SUITE 101, CORAL GABLES, FL 33143