Carrier	Commercial Products Quick Select Data	**24VN / FE4A** **2 - 5 Tons**

INFINITY SYSTEM

19.0 SEER VARIABLE SPEED RESIDENTIAL SPLIT SYSTEMS
2, 3, 4, 5 TONS

INFINITY 19VS

STANDARD FEATURES
- Puron (R-410A) HFC refrigerant
- Single circuit / variable cooling capacity control
- ECM variable speed motor
- Sturdy non-corrosive polycarbonate condensate drain pan
- Pre-painted exterior panels and primer-coated interior panels tested to 500 hours salt spray protection
- Factory-installed Puron® refrigerant TXV
- Copper tube / aluminum fin condenser coils
- Microtube Technology™ refrigeration system
- Deluxe compressor sound blanket
- Fully insulated cabinet - R-4.2 insulation with vapor barrier

MAINTENANCE FEATURES
- No tools required to service filter
- Central terminal board facilitating simple safety circuit troubleshooting and simplified control box arrangement

RELIABILITY FEATURES
- Infinity intelligence monitors critical systems parameters
- Variable speed rotary compressor
- Internal pressure and temperature protection
- High pressure switch
- Front-seating service valves
- Liquid line filter drier
- WeatherArmor™ protection package
- Internal crank case heater

APPLICATIONS
- Line sets up to 100 feet total equivalent length

Use of the AHRI Certified TM Mark indicates a manufacturer's participation in the program For verification of certification for individual products, go to www.ahridirectory.org.

TECHNICAL SUMMARY

SINGLE CIRCUIT SPLIT SYSTEMS - INVERTER			
NOM TONS	2.0	3.0	4.0
SEER	18.0	18.0	18.0
SEER2	17.5	17.5	18.0
MODEL NO:	24VNA924-3	24VNA936-3	24VNA948-3
MODEL NO:	FE4ANF003	FE4ANF005	FE4ANB006
CFM	700 @ .5"	1200 @ .5"	1600 @ .5"
REFRIGERANT	R-410A	R-410A	R-410A
AMBIENT	95	95	95
CAP (MBH) @ 80/67 (TC/SC)	23.9 / 18.4	35.4 / 27.3	46.6 / 36.0
CAP (MBH) @ 75/62 (TC/SC)	22.9 / 16.8	34.0 / 24.9	44.8 / 32.8
CONDENSING UNIT DATA:			
COMPRESSOR QTY / STAGES	1 / Variable	1 / Variable	1 / Variable
COMPRESSOR 1 RLA	10.3	18.4	20.9
COND. FAN FLA	0.58	1.2	1.2
MCA	13.5	24.2	27.3
MOCP	20	40	40
DIMENSIONS (LxWxH) (IN)	24" x 24" x 33"	24" x 24" x 39"	32" x 32" x 40"
STD WEIGHT (LBS)	158	186	255
AIR HANDLER DATA:			
EVAP. FAN FLA - BHP	4.3 - 1/2	4.3 - 1/2	6.8 - 3/4
HEATER KW	5.0	8.0	10.0
MCA (208 / 230)	31.2 / 33.5	44.7 / 48.5	53.8 / 58.5
MOCP (208 / 230)	35 / 35	45 / 50	60 / 60
DIMENSIONS (LxWxH) (IN)	22" x 22" x 52"	22" x 22" x 54"	22" x 25" x 60"
STD WEIGHT (LBS)	150	172	207
REF. TUBES O.D. (IN):			
SUCTION LINE	3/4	3/4	7/8
LIQUID LINE	3/8	3/8	3/8
	AHU & CU#5	AHU & CU#2,3	AHU & CU#1,4

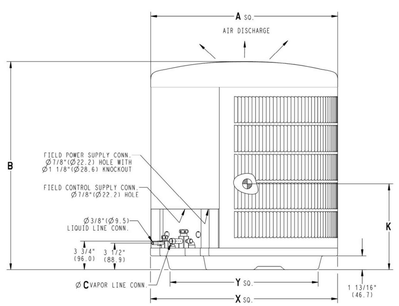

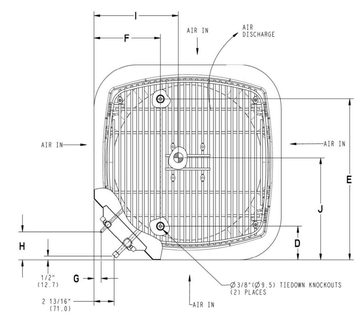

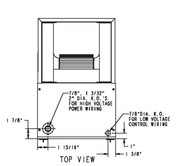

NOTE:
1. SERIES DESIGNATION IS THE 14TH POSITION OF UNIT PRODUCT NUMBER

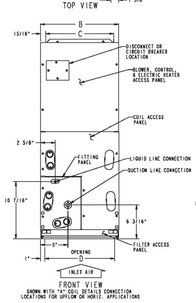

UNIT CONNECTION SIZES

DUCTION: 002 & 003 - 3/4" I. D. SWEAT
004 - 006 - 7/8" I. D. SWEAT
LIQUID: 3/8" SWEAT
CONDENSATE: 3/4" FPT

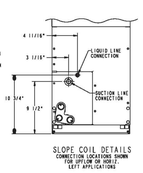

SLOPE COIL DETAILS
CONNECTION LOCATIONS SHOWN FOR DOWLOW OR HORIZ. LEFT APPLICATIONS

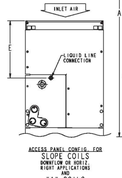

ACCESS PANEL CONFIG. FOR
SLOPE COILS
DOWNFLOW OR HORIZ. RIGHT APPLICATIONS
AND
"A" COILS
DOWNFLOW APPLICATIONS

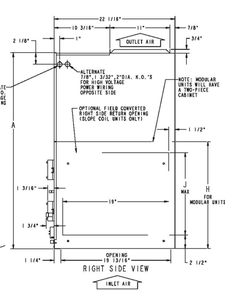

AHRI CERTIFIED® www.ahridirectory.org

Certificate of Product Ratings

AHRI Certified Reference Number : 9883708 Date : 10-23-2024 Model Status : Production Stopped

AHRI Type : RCU-A-CB (Split System: Air-Cooled Condensing Unit, Coil with Blower)

Series : INFINITY 19 VS AIR CONDITIONER

Outdoor Unit Brand Name : CARRIER

Outdoor Unit Model Number (Condenser or Single Package) : 24VNA924B*030*

Indoor Unit Model Number (Evaporator and/or Air Handler) : FE4AN(B,F)003L+UI

Region : Southeast and North (AL, AR, DC, DE, FL, GA, HI, KY, LA, MD, MS, NC, OK, SC, TN, TX, VA, AK, CO, CT, ID, IL, IA, IN, KS, MA, ME, MI, MN, MO, MT, ND, NE, NH, NJ, NY, OH, OR, PA, RI, SD, UT, VT, WA, WV, WI, WY, U.S. Territories)

Region Note : On January 1, 2023, efficiency standards increased for central air conditioners. Beginning January 1, 2023, central air conditioners can only be installed in region(s) for which they meet the new regional efficiency requirements.

The manufacturer of this CARRIER product is responsible for the rating of this system combination.

Rated as follows in accordance with the latest edition of AHRI 210/240 - 2017 with Addendum 1, Performance Rating of Unitary Air-Conditioning & Air-Source Heat Pump Equipment and subject to rating accuracy by AHRI-sponsored, independent, third party testing:

Cooling Capacity (A2) - Single or High Stage (95F), btuh : 24000

SEER : 18.00

EER (A2) - Single or High Stage (95F) : 11.00

Rated as follows in accordance with the latest edition of AHRI 210/240 – 2024, Performance Rating of Unitary Air-Conditioning & Air-Source Heat Pump Equipment and subject to rating accuracy by AHRI-sponsored, independent, third party testing:

Cooling Capacity (A2‡) – Single or High Stage (95F), btuh : 24200

SEER2 : 17.50

EER2 (A2‡) – Single or High Stage (95F) : 10.50

AHU & CU#5

†"Active" Model Status are those that an AHRI Certification Program Participant is currently producing AND selling or offering for sale; OR new models that are being marketed but are not yet being produced."Production Stopped" Model Status are those that an AHRI Certification Program Participant is no longer producing BUT is still selling or offering for sale.

Ratings that are accompanied by WAS indicate an involuntary re-rate. The new published rating is shown along with the previous (i.e. WAS) rating.

The Department of Energy has published updated energy efficiency metrics for central air conditioners and heat pumps. This publication reflects both the 1987 metric (SEER) and the 2023 metric (SEER2). Efficiency requirements are published at 10 C.F.R. 430.32(c). Please refer to www.AHRInet.org for more information about updated energy efficiency metrics.

DISCLAIMER
AHRI does not endorse the product(s) listed on this Certificate and makes no representations, warranties or guarantees as to, and assumes no responsibility for, the product(s) listed on this Certificate. AHRI expressly disclaims all liability for damages of any kind arising out of the use or performance of the product(s), or the unauthorized alteration of data listed on this Certificate. Certified ratings are valid only for models and configurations listed in the directory at www.ahridirectory.org.

TERMS AND CONDITIONS
This Certificate and its contents are proprietary products of AHRI. This Certificate shall only be used for individual, personal and confidential reference purposes. The contents of this Certificate may not, in whole or in part, be reproduced; copied; disseminated; entered into a computer database; or otherwise utilized, in any form or manner or by any means, except for the user's individual, personal and confidential reference.

CERTIFICATE VERIFICATION
The information for the model cited on this certificate can be verified at www.ahridirectory.org, click on "Verify Certificate" link and enter the AHRI Certified Reference Number and the date on which the certificate was issued, which is listed above, and the Certificate No., which is listed at bottom right.

AHRI AIR-CONDITIONING, HEATING, & REFRIGERATION INSTITUTE
we make life better®

©2024 Air-Conditioning, Heating, and Refrigeration Institute

CERTIFICATE NO.: 13374165235218746 16

AHRI CERTIFIED® www.ahridirectory.org

Certificate of Product Ratings

AHRI Certified Reference Number : 206734008 Date : 10-23-2024 Model Status : Production Stopped

AHRI Type : RCU-A-CB (Split System: Air-Cooled Condensing Unit, Coil with Blower)

Series : INFINITY 19 VS AIR CONDITIONER

Outdoor Unit Brand Name : CARRIER

Outdoor Unit Model Number (Condenser or Single Package) : 24VNA936A*032*

Indoor Unit Model Number (Evaporator and/or Air Handler) : FE4AN(B,F)005L+UI

Region : Southeast and North (AL, AR, DC, DE, FL, GA, HI, KY, LA, MD, MS, NC, OK, SC, TN, TX, VA, AK, CO, CT, ID, IL, IA, IN, KS, MA, ME, MI, MN, MO, MT, ND, NE, NH, NJ, NY, OH, OR, PA, RI, SD, UT, VT, WA, WV, WI, WY, U.S. Territories)

Region Note : On January 1, 2023, efficiency standards increased for central air conditioners. Beginning January 1, 2023, central air conditioners can only be installed in region(s) for which they meet the new regional efficiency requirements.

The manufacturer of this CARRIER product is responsible for the rating of this system combination.

Rated as follows in accordance with the latest edition of AHRI 210/240 - 2017 with Addendum 1, Performance Rating of Unitary Air-Conditioning & Air-Source Heat Pump Equipment and subject to rating accuracy by AHRI-sponsored, independent, third party testing:

Cooling Capacity (A2) - Single or High Stage (95F), btuh : 35000

SEER : 18.00

EER (A2) - Single or High Stage (95F) : 10.50

Rated as follows in accordance with the latest edition of AHRI 210/240 – 2024, Performance Rating of Unitary Air-Conditioning & Air-Source Heat Pump Equipment and subject to rating accuracy by AHRI-sponsored, independent, third party testing:

Cooling Capacity (A2‡) – Single or High Stage (95F), btuh : 35200

SEER2 : 17.50

EER2 (A2‡) – Single or High Stage (95F) : 10.00

AHU & CU#2,3

†"Active" Model Status are those that an AHRI Certification Program Participant is currently producing AND selling or offering for sale; OR new models that are being marketed but are not yet being produced."Production Stopped" Model Status are those that an AHRI Certification Program Participant is no longer producing BUT is still selling or offering for sale.

Ratings that are accompanied by WAS indicate an involuntary re-rate. The new published rating is shown along with the previous (i.e. WAS) rating.

The Department of Energy has published updated energy efficiency metrics for central air conditioners and heat pumps. This publication reflects both the 1987 metric (SEER) and the 2023 metric (SEER2). Efficiency requirements are published at 10 C.F.R. 430.32(c). Please refer to www.AHRInet.org for more information about updated energy efficiency metrics.

DISCLAIMER
AHRI does not endorse the product(s) listed on this Certificate and makes no representations, warranties or guarantees as to, and assumes no responsibility for, the product(s) listed on this Certificate. AHRI expressly disclaims all liability for damages of any kind arising out of the use or performance of the product(s), or the unauthorized alteration of data listed on this Certificate. Certified ratings are valid only for models and configurations listed in the directory at www.ahridirectory.org.

TERMS AND CONDITIONS
This Certificate and its contents are proprietary products of AHRI. This Certificate shall only be used for individual, personal and confidential reference purposes. The contents of this Certificate may not, in whole or in part, be reproduced; copied; disseminated; entered into a computer database; or otherwise utilized, in any form or manner or by any means, except for the user's individual, personal and confidential reference.

CERTIFICATE VERIFICATION
The information for the model cited on this certificate can be verified at www.ahridirectory.org, click on "Verify Certificate" link and enter the AHRI Certified Reference Number and the date on which the certificate was issued, which is listed above, and the Certificate No., which is listed at bottom right.

AHRI AIR-CONDITIONING, HEATING, & REFRIGERATION INSTITUTE
we make life better®

©2024 Air-Conditioning, Heating, and Refrigeration Institute

CERTIFICATE NO.: 13374165143934916 4

AHRI CERTIFIED® www.ahridirectory.org

Certificate of Product Ratings

AHRI Certified Reference Number : 9884380 Date : 02-06-2024 Model Status : Active

AHRI Type : RCU-A-CB (Split System: Air-Cooled Condensing Unit, Coil with Blower)

Series : INFINITY 19 VS AIR CONDITIONER

Outdoor Unit Brand Name : CARRIER

Outdoor Unit Model Number (Condenser or Single Package) : 24VNA948A*030*

Indoor Unit Model Number (Evaporator and/or Air Handler) : FE4AN(B,F)005L+UI

Region : Southeast and North (AL, AR, DC, DE, FL, GA, HI, KY, LA, MD, MS, NC, OK, SC, TN, TX, VA, AK, CO, CT, ID, IL, IA, IN, KS, MA, ME, MI, MN, MO, MT, ND, NE, NH, NJ, NY, OH, OR, PA, RI, SD, UT, VT, WA, WV, WI, WY, U.S. Territories)

Region Note : On January 1, 2023, efficiency standards increased for central air conditioners. Beginning January 1, 2023, central air conditioners can only be installed in region(s) for which they meet the new regional efficiency requirements.

The manufacturer of this CARRIER product is responsible for the rating of this system combination.

Rated as follows in accordance with the latest edition of AHRI 210/240 - 2017 with Addendum 1, Performance Rating of Unitary Air-Conditioning & Air-Source Heat Pump Equipment and subject to rating accuracy by AHRI-sponsored, independent, third party testing:

Cooling Capacity (A2) - Single or High Stage (95F), btuh : 45500

SEER : 18.00

EER (A2) - Single or High Stage (95F) : 11.00

Rated as follows in accordance with the latest edition of AHRI 210/240 – 2023, Performance Rating of Unitary Air-Conditioning & Air-Source Heat Pump Equipment and subject to rating accuracy by AHRI-sponsored, independent, third party testing:

Cooling Capacity (A2‡) – Single or High Stage (95F), btuh : 45500

SEER2 : 18.00

EER2 (A2‡) – Single or High Stage (95F) : 10.50

AHU & CU#1,4

†"Active" Model Status are those that an AHRI Certification Program Participant is currently producing AND selling or offering for sale; OR new models that are being marketed but are not yet being produced."Production Stopped" Model Status are those that an AHRI Certification Program Participant is no longer producing BUT is still selling or offering for sale.

Ratings that are accompanied by WAS indicate an involuntary re-rate. The new published rating is shown along with the previous (i.e. WAS) rating.

The Department of Energy has published updated energy efficiency metrics for central air conditioners and heat pumps. This publication reflects both the 1987 metric (SEER) and the 2023 metric (SEER2). Efficiency requirements are published at 10 C.F.R. 430.32(c). Please refer to www.AHRInet.org for more information about updated energy efficiency metrics.

DISCLAIMER
AHRI does not endorse the product(s) listed on this Certificate and makes no representations, warranties or guarantees as to, and assumes no responsibility for, the product(s) listed on this Certificate. AHRI expressly disclaims all liability for damages of any kind arising out of the use or performance of the product(s), or the unauthorized alteration of data listed on this Certificate. Certified ratings are valid only for models and configurations listed in the directory at www.ahridirectory.org.

TERMS AND CONDITIONS
This Certificate and its contents are proprietary products of AHRI. This Certificate shall only be used for individual, personal and confidential reference purposes. The contents of this Certificate may not, in whole or in part, be reproduced; copied; disseminated; entered into a computer database; or otherwise utilized, in any form or manner or by any means, except for the user's individual, personal and confidential reference.

CERTIFICATE VERIFICATION
The information for the model cited on this certificate can be verified at www.ahridirectory.org, click on "Verify Certificate" link and enter the AHRI Certified Reference Number and the date on which the certificate was issued, which is listed above, and the Certificate No., which is listed at bottom right.

AHRI AIR-CONDITIONING, HEATING, & REFRIGERATION INSTITUTE
we make life better®

©2024 Air-Conditioning, Heating, and Refrigeration Institute

CERTIFICATE NO.: 13351723323246753 6

Daniel F Gutierrez

Digitally signed by Daniel F Gutierrez
DN: CN=Daniel F Gutierrez, O=DG CONSULTING ENGINEERS, OU=Electrical, C=US
Date: 2024.11.21 19:30:02-05'00'

"This item has been digitally signed and sealed by Daniel F. Gutierrez on the date adjacent to the seal. Printed copies of this document are not considered signed and sealed and the signature must be verified on any electronic copies"

DANIEL F. GUTIERREZ, P.E.
LIC. #049086

29111 KINSINGTON COURT
WESLEY CHAPEL
PH:(786)499--4167
Email:danny@dfgengineers.com

DG CONSULTING ENGINEERS, LLC
DESIGN — INSPECTIONS

NEW RESIDENCE

GS JPD 10635 LLC

10635 SW 63 AV
MIAMI, FL

SEAL

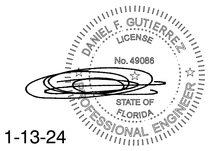

11-13-24

DANIEL F. GUTIERREZ, P.E.
ELECTRICAL ENGINEER LIC. #049086

REVISIONS

NO.	DESC	DATE

SCHEMATIC SET

SEAL

BALLI - TRAUTMAN
ARCHITECTURE INTERIORS CONSTRUCTION

JOB NUMBER:
CHECKED BY: GB
ISSUE DATE: Issue Date
SCALE: AS NOTED

SHEET TITLE

MECHANICAL
AHU & CU SPECS

SHEET NUMBER

M-104

COPYRIGHT BALLI-TRAUTMAN ARCHITECTS, LLC
1533 SUNSET DRIVE SUITE 101, CORAL GABLES, FL 33143