SHOP DRAWINGS FOR NEW WINDOWS AND SLIDING GLASS DOORS FOR:

THE HUBER RESIDENCE
12020 S.W. 77 AVENUE
PINECREST, FL 33156

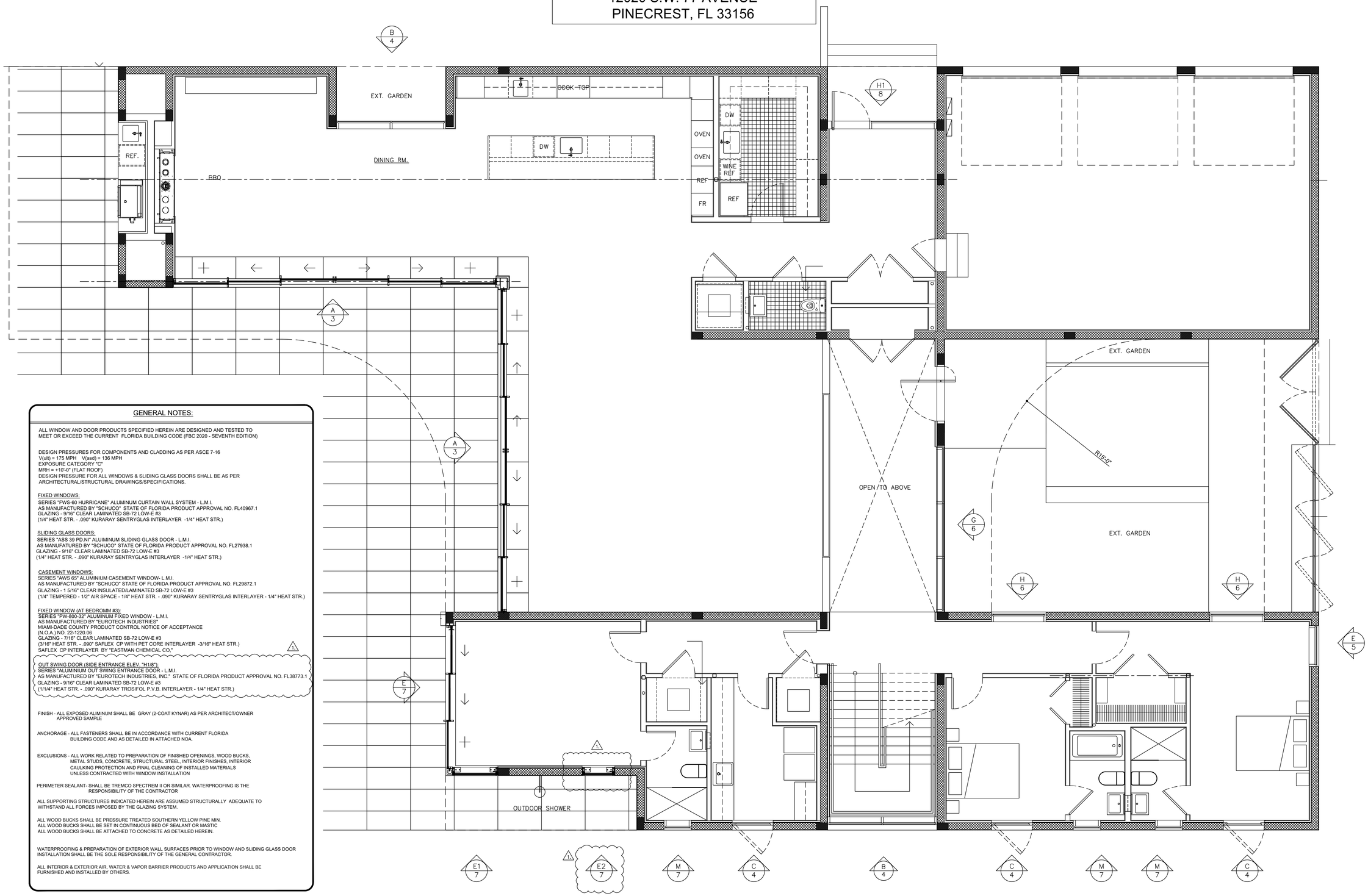

GENERAL NOTES:

ALL WINDOW AND DOOR PRODUCTS SPECIFIED HEREIN ARE DESIGNED AND TESTED TO MEET OR EXCEED THE CURRENT FLORIDA BUILDING CODE (FBC 2020 - SEVENTH EDITION)

DESIGN PRESSURES FOR COMPONENTS AND CLADDING AS PER ASCE 7-16
V(ult) = 175 MPH V(asd) = 136 MPH
EXPOSURE CATEGORY "C"
MRH = +10'-0" (FLAT ROOF)
DESIGN PRESSURE FOR ALL WINDOWS & SLIDING GLASS DOORS SHALL BE AS PER ARCHITECTURAL/STRUCTURAL DRAWINGS/SPECIFICATIONS.

FIXED WINDOWS:
SERIES "FWS-60 HURRICANE" ALUMINUM CURTAIN WALL SYSTEM - L.M.I.
AS MANUFACTURED BY "SCHUCO" STATE OF FLORIDA PRODUCT APPROVAL NO. FL40967.1
GLAZING - 9/16" CLEAR LAMINATED SB-72 LOW-E #3
(1/4" HEAT STR. - .090" KURARAY SENTRYGLAS INTERLAYER -1/4" HEAT STR.)

SLIDING GLASS DOORS:
SERIES "ASS 39 PD.NI" ALUIMINUM SLIDING GLASS DOOR - L.M.I.
AS MANUFATURED BY "SCHUCO" STATE OF FLORIDA PRODUCT APPROVAL NO. FL27938.1
GLAZING - 9/16" CLEAR LAMINATED SB-72 LOW-E #3
(1/4" HEAT STR. - .090" KURARAY SENTRYGLAS INTERLAYER -1/4" HEAT STR.)

CASEMENT WINDOWS:
SERIES "AWS 65" ALUMINIUM CASEMENT WINDOW- L.M.I.
AS MANUFACTURED BY "SCHUCO" STATE OF FLORIDA PRODUCT APPROVAL NO. FL29872.1
GLAZING - 1 5/16" CLEAR INSULATED/LAMINATED SB-72 LOW-E #3
(1/4" TEMPERED - 1/2" AIR SPACE - 1/4" HEAT STR. - .090" KURARAY SENTRYGLAS INTERLAYER - 1/4" HEAT STR.)

FIXED WINDOW (AT BEDROMM #3):
SERIES "PW-800-32" ALUMINUM FIXED WINDOW - L.M.I.
AS MANUFACTURED BY "EUROTECH INDUSTRIES"
MIAMI-DADE COUNTY PRODUCT CONTROL NOTICE OF ACCEPTANCE
(N.O.A.) NO. 22-1220.06
GLAZING - 7/16" CLEAR LAMINATED SB-72 LOW-E #3
(3/16" HEAT STR. - .090" SAFLEX CP WITH PET CORE INTERLAYER -3/16" HEAT STR.)
SAFLEX CP INTERLAYER BY "EASTMAN CHEMICAL CO."

1.

OUT SWING DOOR (SIDE ENTRANCE ELEV. "H1/8"):
SERIES "ALUMINIUM OUT SWING ENTRANCE DOOR - L.M.I.
AS MANUFACTURED BY "EUROTECH INDUSTRIES, INC." STATE OF FLORIDA PRODUCT APPROVAL NO. FL38773.1
GLAZING - 9/16" CLEAR LAMINATED SB-72 LOW-E #3
(1/1/4" HEAT STR. - .090" KURARAY TROSIFOL P.V.B. INTERLAYER - 1/4" HEAT STR.)

FINISH - ALL EXPOSED ALIMINUM SHALL BE GRAY (2-COAT KYNAR) AS PER ARCHITECT/OWNER APPROVED SAMPLE

ANCHORAGE - ALL FASTENERS SHALL BE IN ACCORDANCE WITH CURRENT FLORIDA BUILDING CODE AND AS DETAILED IN ATTACHED NOA.

EXCLUSIONS - ALL WORK RELATED TO PREPARATION OF FINISHED OPENINGS, WOOD BUCKS, METAL STUDS, CONCRETE, STRUCTURAL STEEL, INTERIOR FINISHES, INTERIOR CAULKING PROTECTION AND FINAL CLEANING OF INSTALLED MATERIALS UNLESS CONTRACTED WITH WINDOW INSTALLATION

PERIMETER SEALANT- SHALL BE TREMCO SPECTREM II OR SIMILAR. WATERPROOFING IS THE RESPONSIBILITY OF THE CONTRACTOR

ALL SUPPORTING STRUCTURES INDICATED HEREIN ARE ASSUMED STRUCTURALLY ADEQUATE TO WITHSTAND ALL FORCES IMPOSED BY THE GLAZING SYSTEM.

ALL WOOD BUCKS SHALL BE PRESSURE TREATED SOUTHERN YELLOW PINE MIN.
ALL WOOD BUCKS SHALL BE SET IN CONTINUOUS BED OF SEALANT OR MASTIC
ALL WOOD BUCKS SHALL BE ATTACHED TO CONCRETE AS DETAILED HEREIN.

WATERPROOFING & PREPARATION OF EXTERIOR WALL SURFACES PRIOR TO WINDOW AND SLIDING GLASS DOOR INSTALLATION SHALL BE THE SOLE RESPONSIBILITY OF THE GENERAL CONTRACTOR.

ALL INTERIOR & EXTERIOR AIR, WATER & VAPOR BARRIER PRODUCTS AND APPLICATION SHALL BE FURNISHED AND INSTALLED BY OTHERS.

REVISIONS

NO.	DATE	DESCRIPTION
1	03/22/24	REVISIONS AS PER REVISED ARCH. DWGS. – AS BUILT REVS.

SEAL:

WILLIAM D. COOK P.E.
FLA P.E. # 43904
FLA S.I. # 2008

BROMLEY • COOK ENGINEERING, INC.
STRUCTURAL ENGINEERING SERVICES
5440 N.W. 33RD AVENUE SUITE 100
FORT LAUDERDALE, FLORIDA 33309
TEL: (954) 772-4624 FAX: (954) 772-4634

PROJECT:
NEW WINDOWS & SLIDING GLASS DOORS FOR:
HUBER RESIDENCE
12020 S.W. 77 AVENUE
PINECREST, FL 33156

CONTRACTOR:
RELIANCE WINDOW SYSTEMS, INC.

DATE: 02/22/2023
DRAWN BY: M.G.
CHECKED BY: A.G.
SCALE: 1/4"=1'-0"

PROJECT NO.

SHEET
1/24

THIS DRAWING IS AN INSTRUMENT OF SERVICE AND IS THE PROPERTY OF BROMLEY COOK ENGINEERING, INC., AND IS NOT TO BE REPRODUCED IN WHOLE OR IN PART WITHOUT THE EXPRESS WRITTEN PERMISSION OF BROMLEY COOK ENGINEERING, INC.

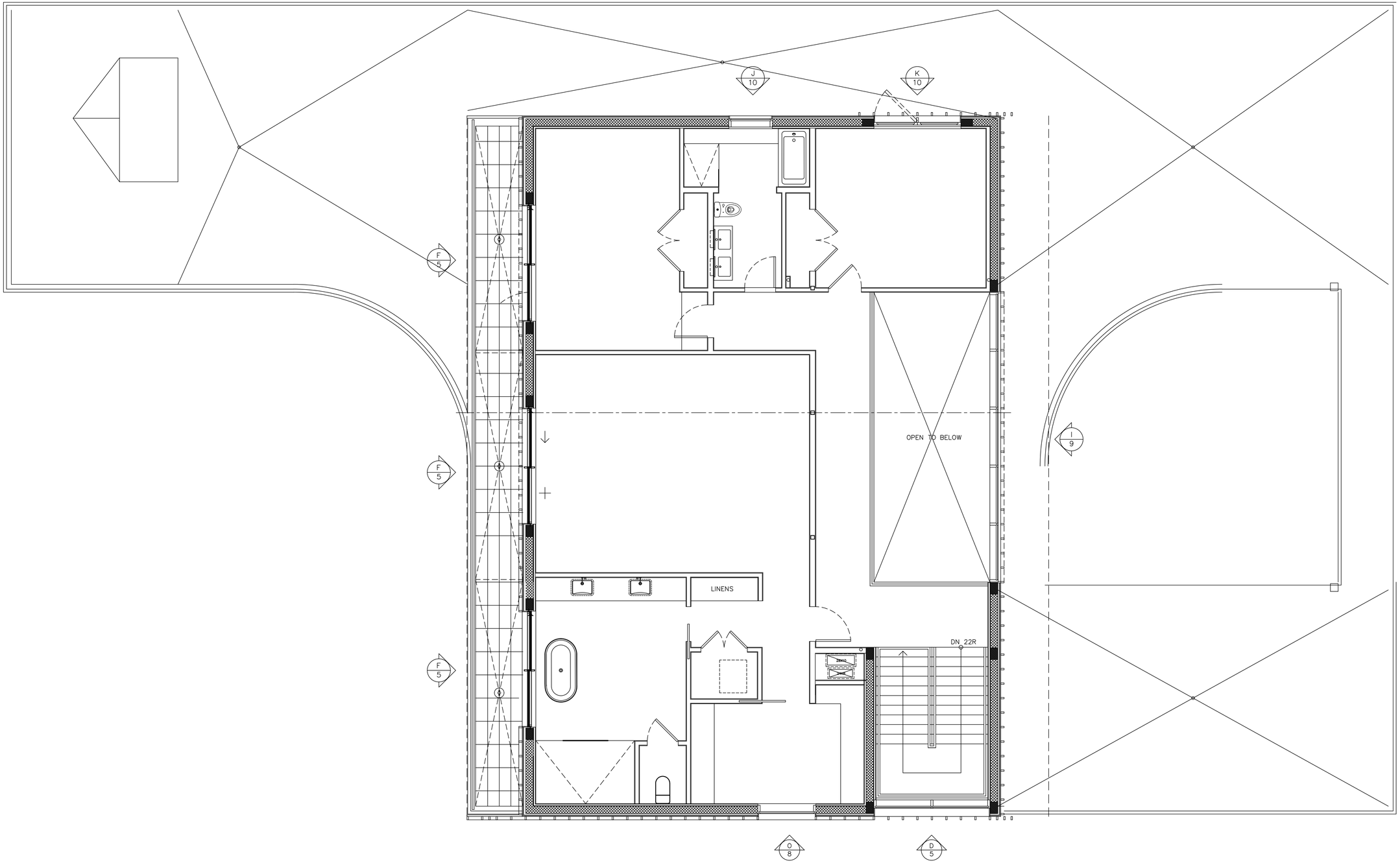

SECOND FLOOR PLAN

3/8" = 1'-0"

THIS DRAWING IS AN INSTRUMENT OF SERVICE AND IS THE PROPERTY OF BROMLEY COOK ENGINEERING, INC., AND IS NOT TO BE REPRODUCED IN WHOLE OR IN PART WITHOUT THE EXPRESS WRITTEN PERMISSION OF BROMLEY COOK ENGINEERING, INC.

REVISIONS

NO.	DATE	DESCRIPTION

SEAL:

WILLIAM D. COOK P.E.
FLA P.E. # 43904
FLA S.I. # 2008

BROMLEY • COOK ENGINEERING, INC.
STRUCTURAL ENGINEERING SERVICES
5440 N.W. 33RD AVENUE SUITE 100
FORT LAUDERDALE, FLORIDA 33309
TEL: (954) 772-4624 FAX: (954) 772-4634

PROJECT:
NEW WINDOWS & SLIDING GLASS DOORS FOR:
HUBER RESIDENCE
12020 S.W. 77 AVENUE
PINECREST, FL 33156

CONTRACTOR:
RELIANCE WINDOW SYSTEMS, INC.

DATE:	02/22/2023
DRAWN BY:	M.G.
CHECKED BY:	A.G.
SCALE:	3/16"=1'-0"

PROJECT NO.

SHEET
2/24

1.

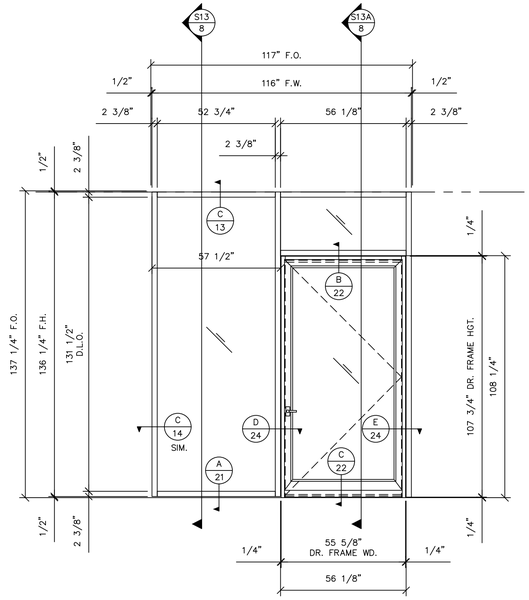

H1 / 8 ELEVATION
QTY. = 1

SERIES "FWS-60 HURRICANE" ALUMINUM CURTAIN WALL SYSTEM – L.M.I.
AS MANUFACTURED BY "SCHUCO"
STATE OF FLORIDA PRODUCT APPROVAL NO. FL40967.1

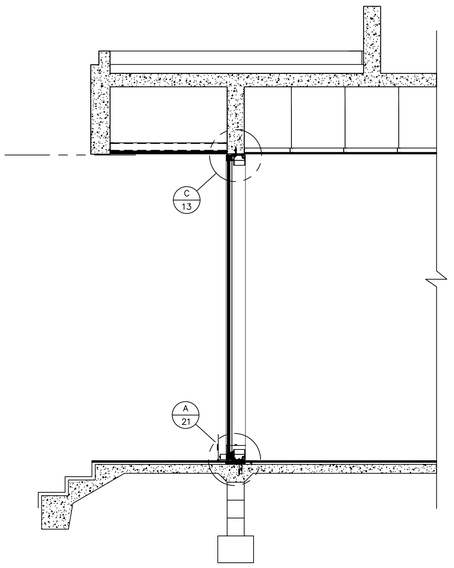

S13 / 8 WALL SECTION

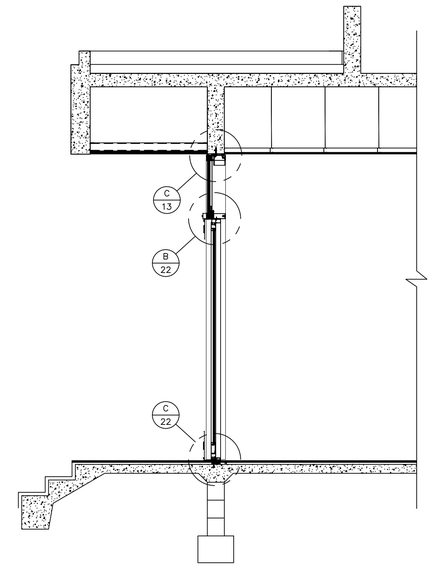

S13A / 8 WALL SECTION

1.

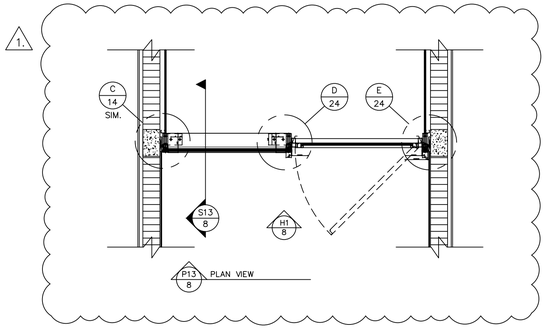

P13 / 8 PLAN VIEW

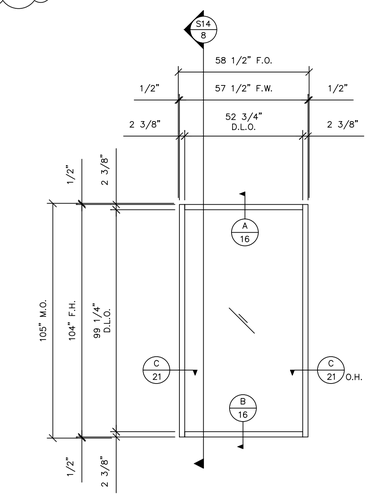

O / 8 ELEVATION
QTY. = 1

SERIES "FWS-60 HURRICANE" ALUMINUM CURTAIN WALL SYSTEM – L.M.I.
AS MANUFACTURED BY "SCHUCO"
STATE OF FLORIDA PRODUCT APPROVAL NO. FL40967.1

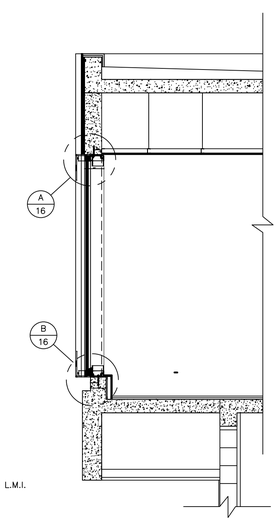

S14 / 8 WALL SECTION

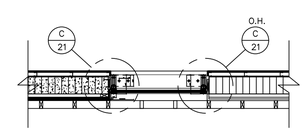

P14 / 8 PLAN VIEW

THIS DRAWING IS AN INSTRUMENT OF SERVICE AND IS THE PROPERTY OF BROMLEY COOK ENGINEERING, INC., AND IS NOT TO BE REPRODUCED IN WHOLE OR IN PART WITHOUT THE EXPRESS WRITTEN PERMISSION OF BROMLEY COOK ENGINEERING, INC.

REVISIONS

NO.	DATE	DESCRIPTION
1	03/22/24	REVISIONS AS PER REVISED ARCH. DWGS. – AS BUILT REVS.

SEAL:

WILLIAM D. COOK P.E.
FLA P.E. # 43904
FLA S.I. # 2008

BROMLEY • COOK ENGINEERING, INC.
STRUCTURAL ENGINEERING SERVICES
5440 N.W. 33RD AVENUE SUITE 100
FORT LAUDERDALE, FLORIDA 33309
TEL: (954) 772-4624 FAX: (954) 772-4634

PROJECT:
NEW WINDOWS & SLIDING GLASS DOORS FOR:
HUBER RESIDENCE
12020 S.W. 77 AVENUE
PINECREST, FL 33156

CONTRACTOR:
RELIANCE WINDOW SYSTEMS, INC.

DATE:	02/22/2023
DRAWN BY:	M.G.
CHECKED BY:	A.G.
SCALE:	3/8"=1'-0"

PROJECT NO.

SHEET
8/24

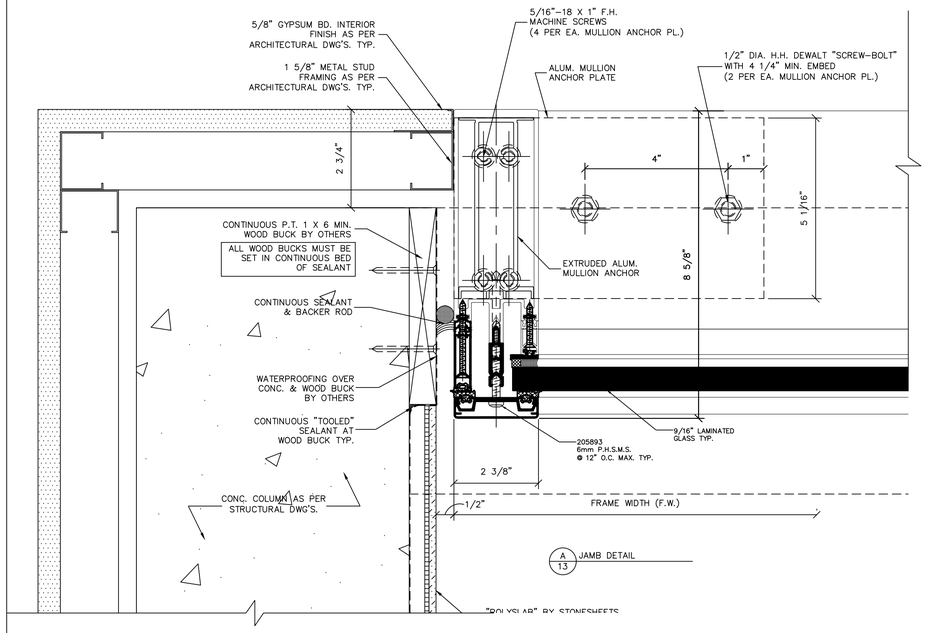

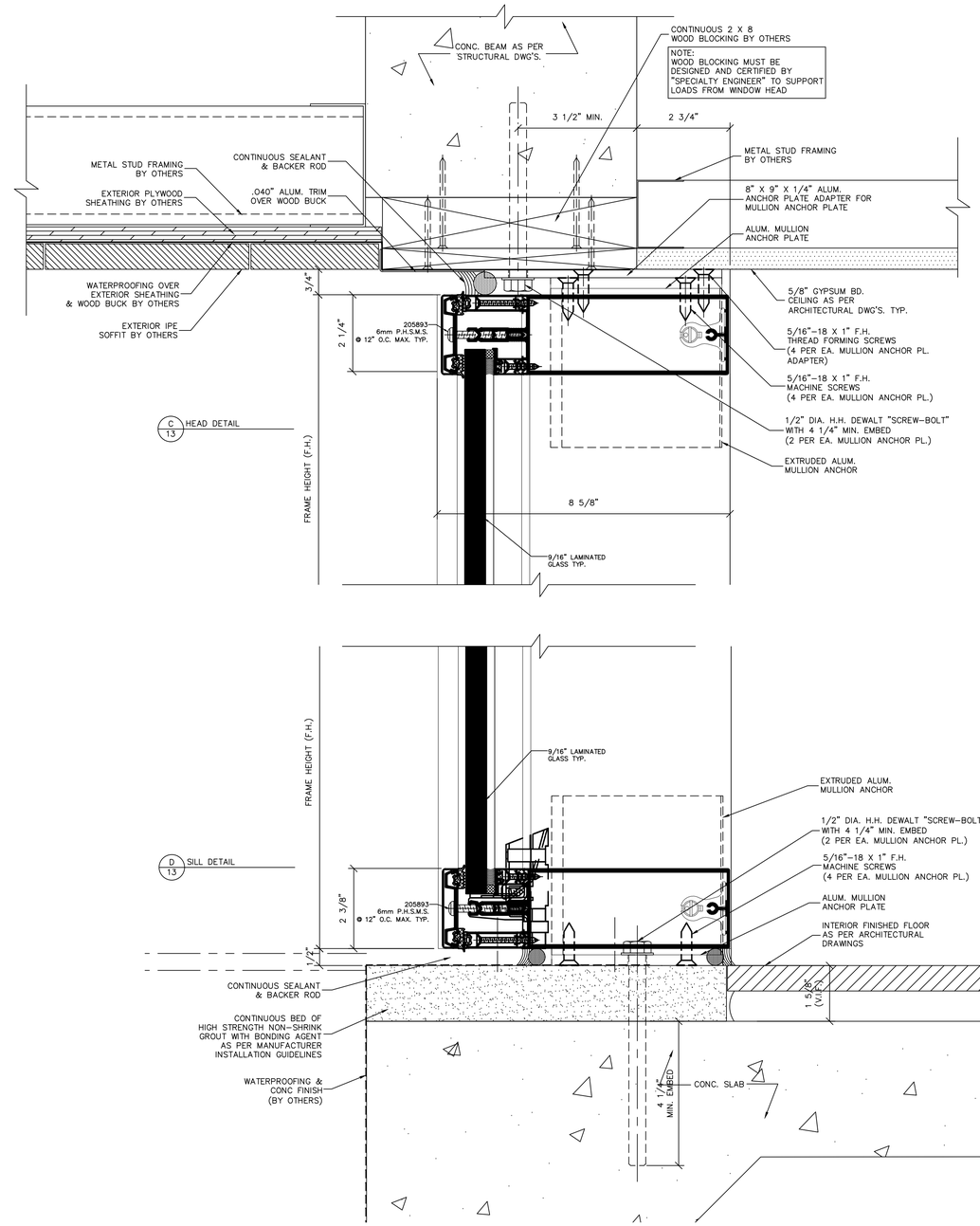

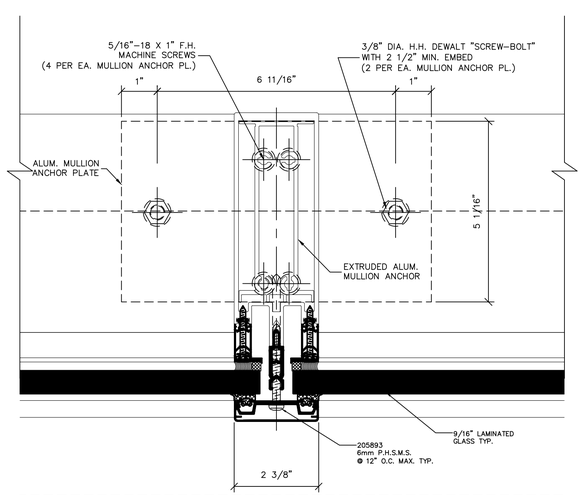

B 13 TYP. VERTICAL MULLION

THIS DRAWING IS AN INSTRUMENT OF SERVICE AND IS THE PROPERTY OF BROMLEY COOK ENGINEERING, INC., AND IS NOT TO BE REPRODUCED IN WHOLE OR IN PART WITHOUT THE EXPRESS WRITTEN PERMISSION OF BROMLEY COOK ENGINEERING, INC.

REVISIONS

NO.	DATE	DESCRIPTION

SEAL:

WILLIAM D. COOK P.E.
FLA P.E. # 43904
FLA S.I. # 2008

BROMLEY • COOK ENGINEERING, INC.
STRUCTURAL ENGINEERING SERVICES
5440 N.W. 33RD AVENUE SUITE 100
FORT LAUDERDALE, FLORIDA 33309
TEL: (954) 772-4624 FAX: (954) 772-4634

PROJECT:
NEW WINDOWS & SLIDING GLASS DOORS FOR:
HUBER RESIDENCE
12020 S.W. 77 AVENUE
PINECREST, FL 33156

CONTRACTOR:
RELIANCE WINDOW SYSTEMS, INC.

DATE: 02/22/2023
DRAWN BY: M.G.
CHECKED BY: A.G.
SCALE: 6"=1'-0"

PROJECT NO.

SHEET
13/24

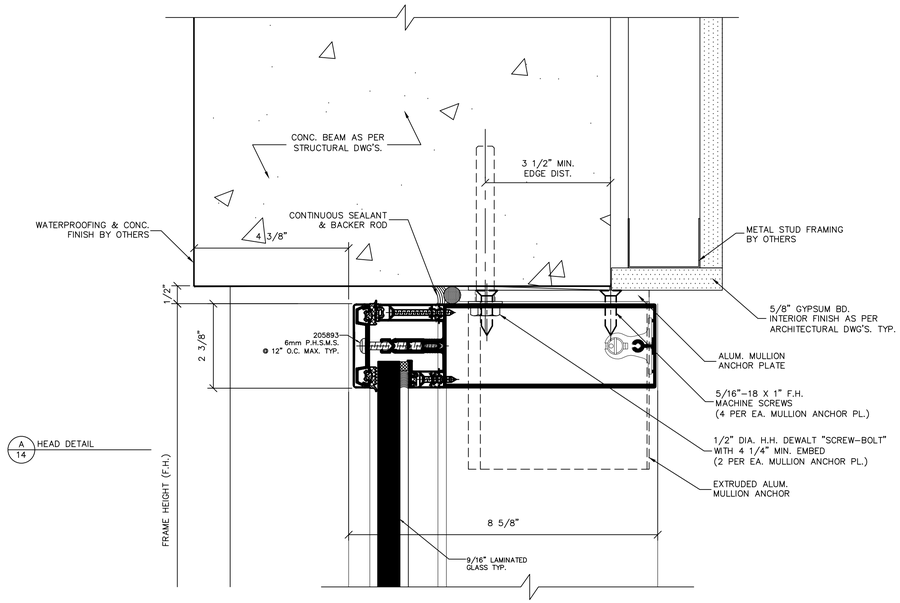

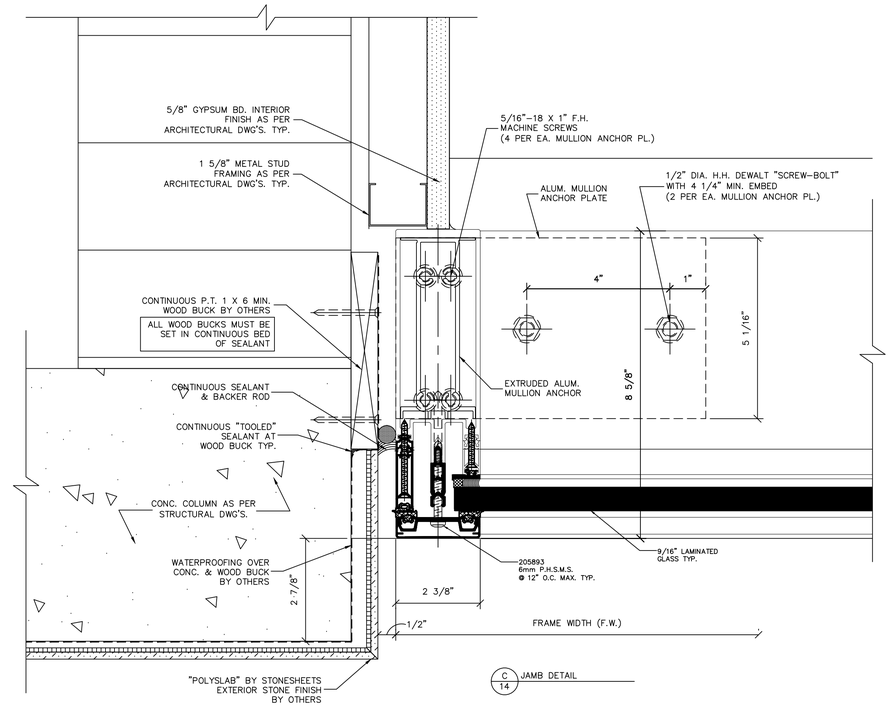

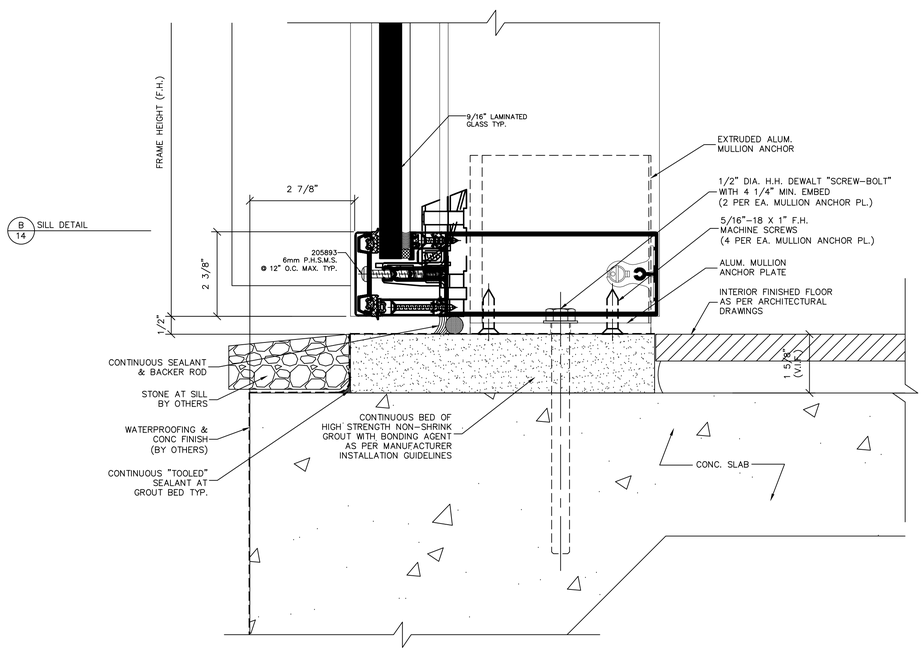

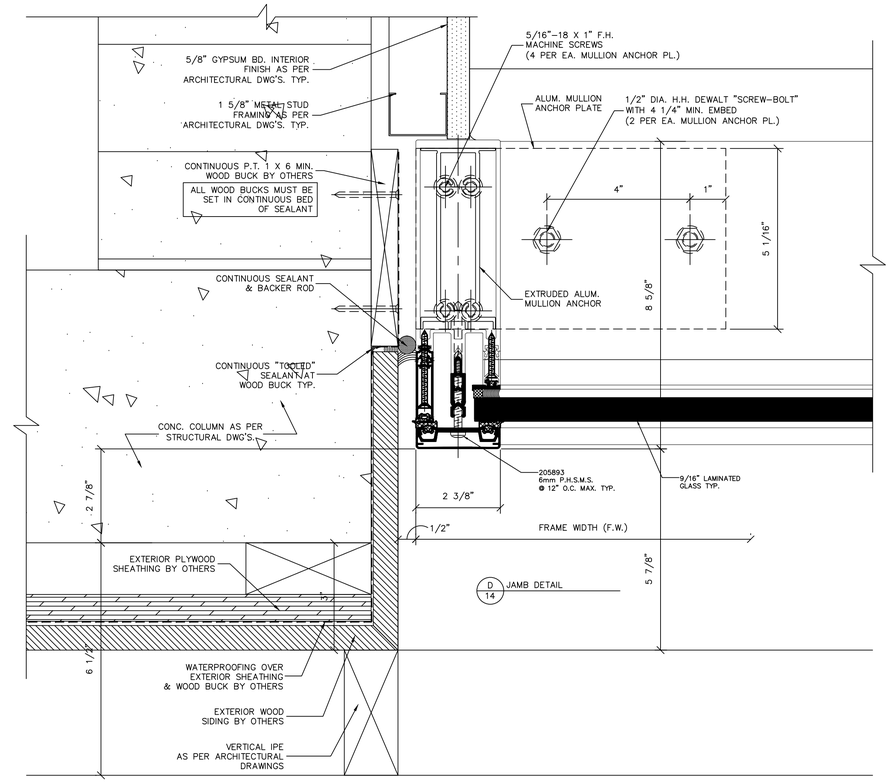

THIS DRAWING IS AN INSTRUMENT OF SERVICE AND IS THE PROPERTY OF BROMLEY COOK ENGINEERING, INC., AND IS NOT TO BE REPRODUCED IN WHOLE OR IN PART WITHOUT THE EXPRESS WRITTEN PERMISSION OF BROMLEY COOK ENGINEERING, INC.

REVISIONS

NO.	DATE	DESCRIPTION

SEAL:

WILLIAM D. COOK P.E.
FLA P.E. # 43904
FLA S.I. # 2008

BROMLEY • COOK ENGINEERING, INC.
STRUCTURAL ENGINEERING SERVICES
5440 N.W. 33RD AVENUE SUITE 100
FORT LAUDERDALE, FLORIDA 33309
TEL: (954) 772-4624 FAX: (954) 772-4634

PROJECT:
NEW WINDOWS & SLIDING GLASS DOORS FOR:
HUBER RESIDENCE
12020 S.W. 77 AVENUE
PINECREST, FL 33156

CONTRACTOR:
RELIANCE WINDOW SYSTEMS, INC.

DATE:	02/22/2023
DRAWN BY:	M.G.
CHECKED BY:	A.G.
SCALE:	6"=1'-0"

PROJECT NO.

SHEET
14/24

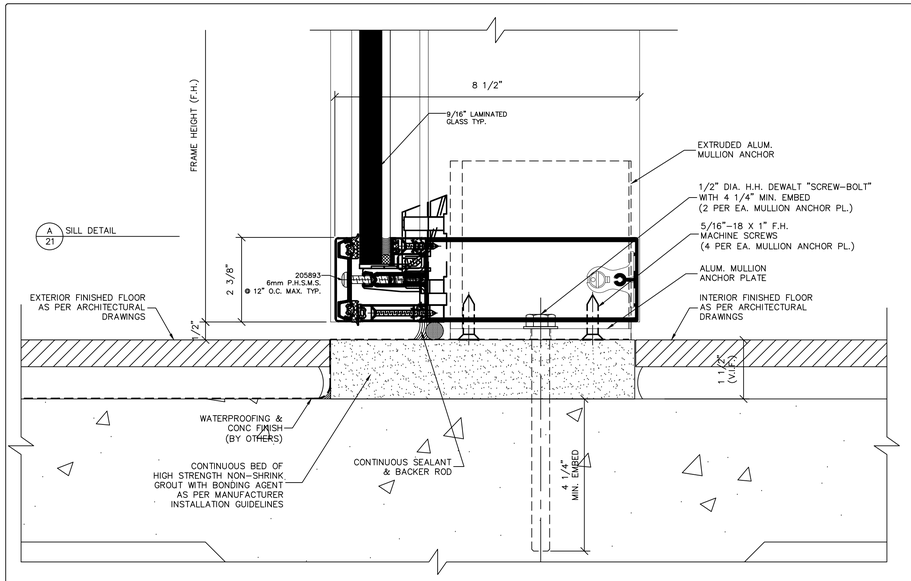

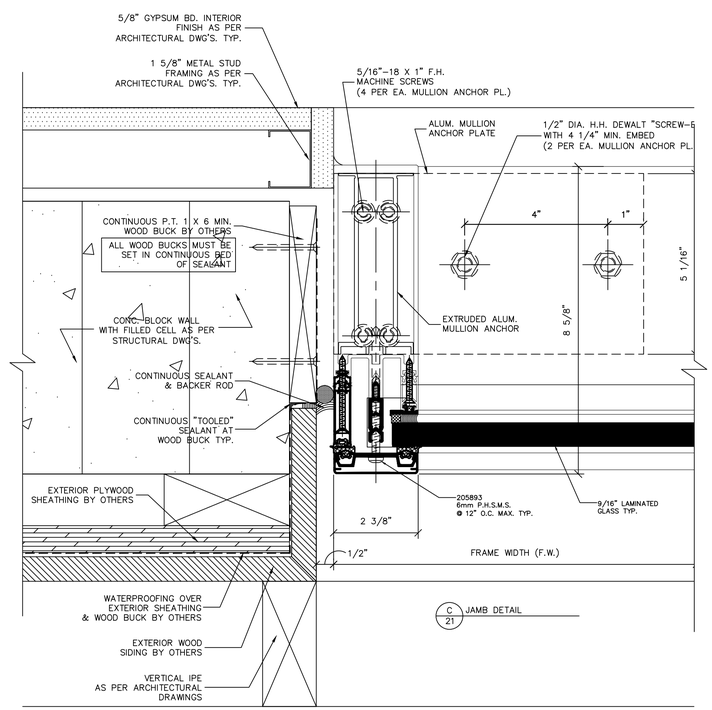

THIS DRAWING IS AN INSTRUMENT OF SERVICE AND IS THE PROPERTY OF BROMLEY COOK ENGINEERING, INC., AND IS NOT TO BE REPRODUCED IN WHOLE OR IN PART WITHOUT THE EXPRESS WRITTEN PERMISSION OF BROMLEY COOK ENGINEERING, INC.

REVISIONS

NO.	DATE	DESCRIPTION

SEAL:

WILLIAM D. COOK P.E.
FLA P.E. # 43904
FLA S.I. # 2008

BROMLEY • COOK ENGINEERING, INC.
STRUCTURAL ENGINEERING SERVICES
5440 N.W. 33RD AVENUE SUITE 100
FORT LAUDERDALE, FLORIDA 33309
TEL: (954) 772-4624 FAX: (954) 772-4634

PROJECT:
NEW WINDOWS & SLIDING GLASS DOORS FOR:
HUBER RESIDENCE
12020 S.W. 77 AVENUE
PINECREST, FL 33156
CONTRACTOR:
RELIANCE WINDOW SYSTEMS, INC.

DATE:	02/22/2023
DRAWN BY:	M.G.
CHECKED BY:	A.G.
SCALE:	6"=1'-0"

PROJECT NO.

SHEET
21/24

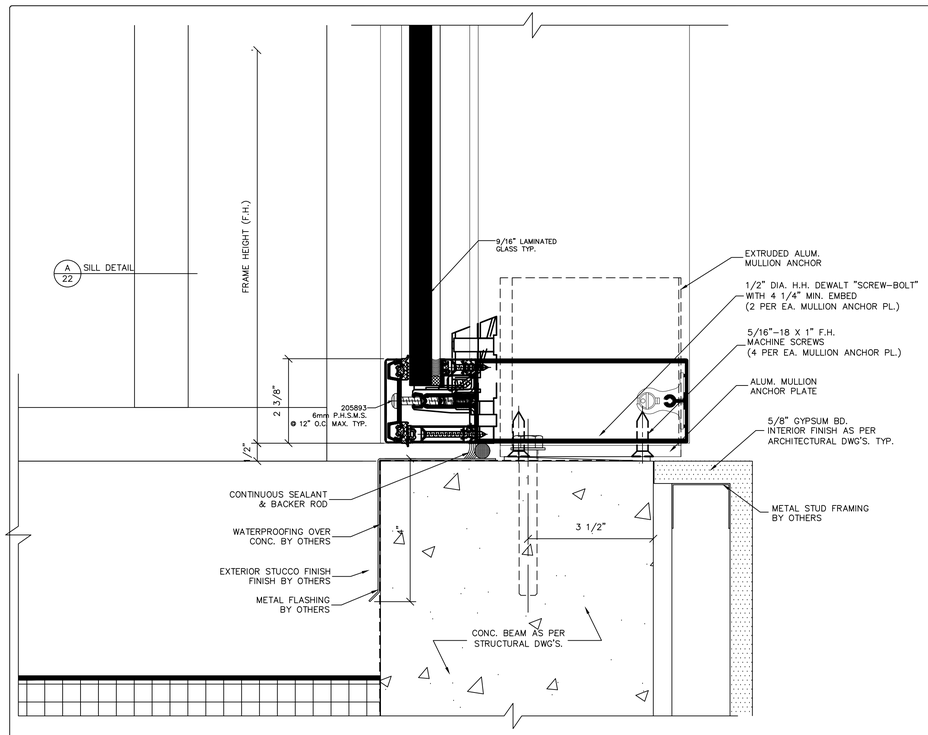

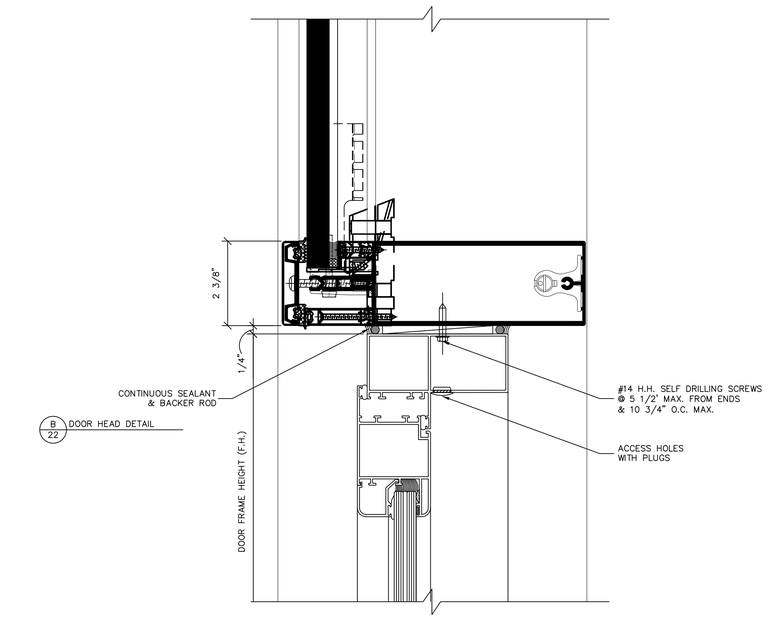

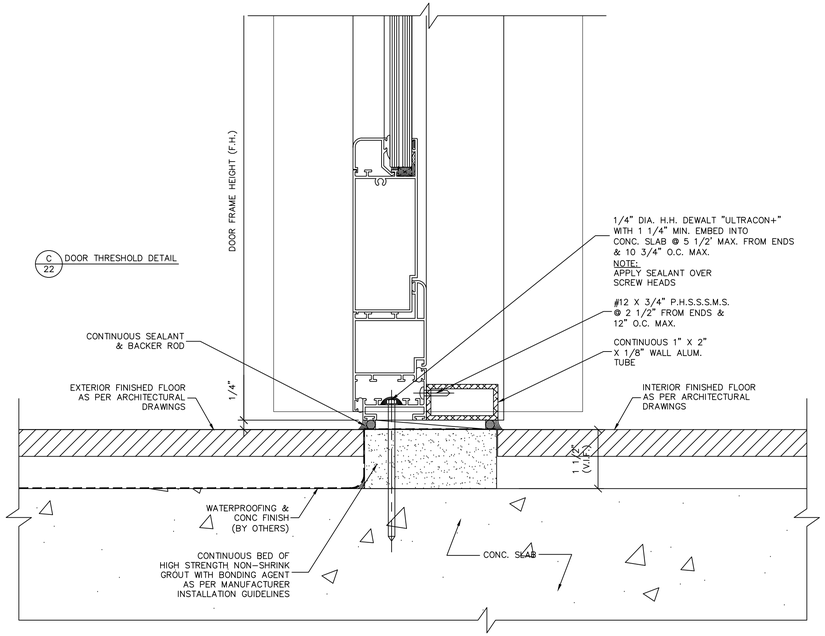

THIS DRAWING IS AN INSTRUMENT OF SERVICE AND IS THE PROPERTY OF BROMLEY COOK ENGINEERING, INC., AND IS NOT TO BE REPRODUCED IN WHOLE OR IN PART WITHOUT THE EXPRESS WRITTEN PERMISSION OF BROMLEY COOK ENGINEERING, INC.

REVISIONS

NO.	DATE	DESCRIPTION

SEAL:

WILLIAM D. COOK P.E.
FLA P.E. # 43904
FLA S.I. # 2008

BROMLEY • COOK ENGINEERING, INC.
STRUCTURAL ENGINEERING SERVICES
5440 N.W. 33RD AVENUE SUITE 100
FORT LAUDERDALE, FLORIDA 33309
TEL: (954) 772-4624 FAX: (954) 772-4634

PROJECT:
NEW WINDOWS & SLIDING GLASS DOORS FOR:
HUBER RESIDENCE
12020 S.W. 77 AVENUE
PINECREST, FL 33156

CONTRACTOR:
RELIANCE WINDOW SYSTEMS, INC.

DATE:	02/22/2023
DRAWN BY:	M.G.
CHECKED BY:	A.G.
SCALE:	6"=1'-0"

PROJECT NO.

SHEET
22/24

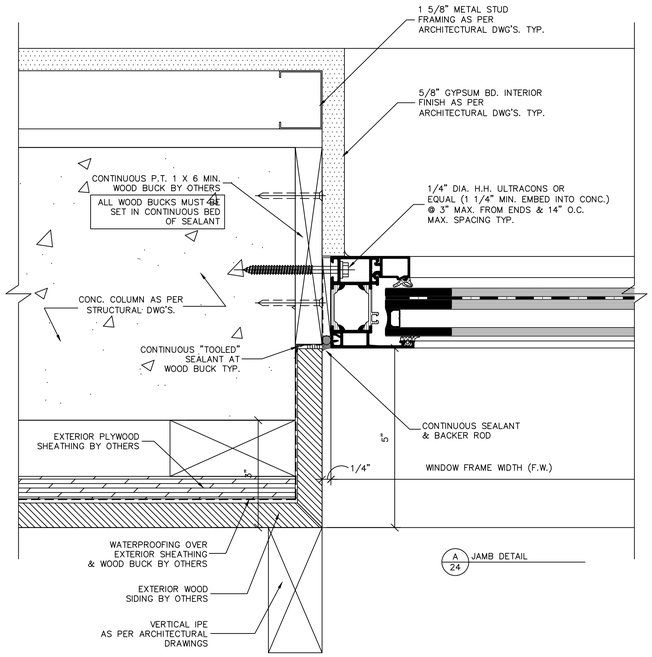

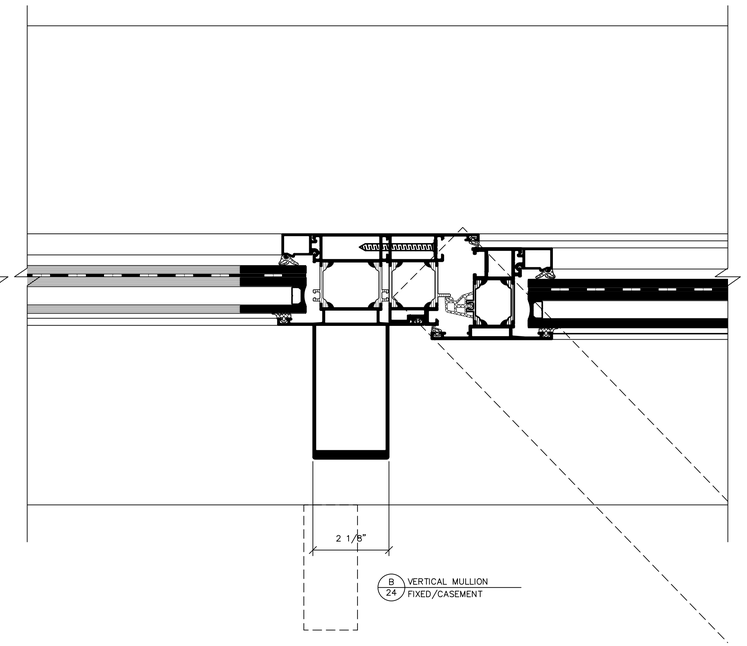

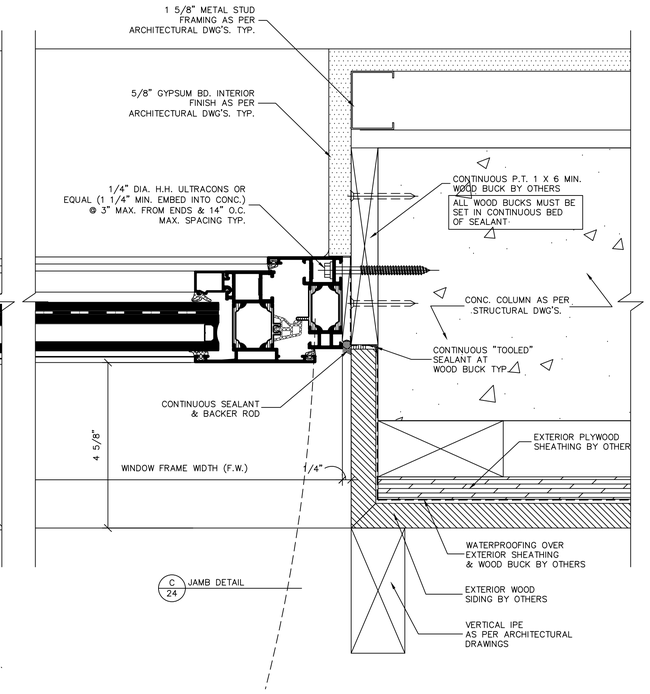

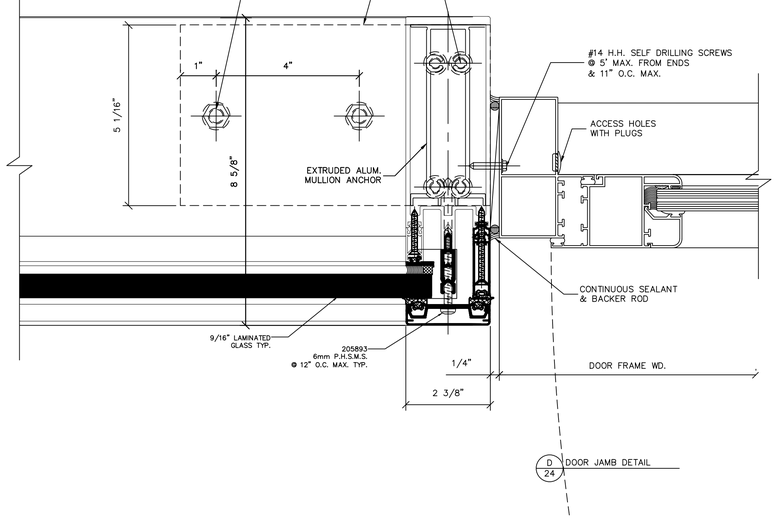

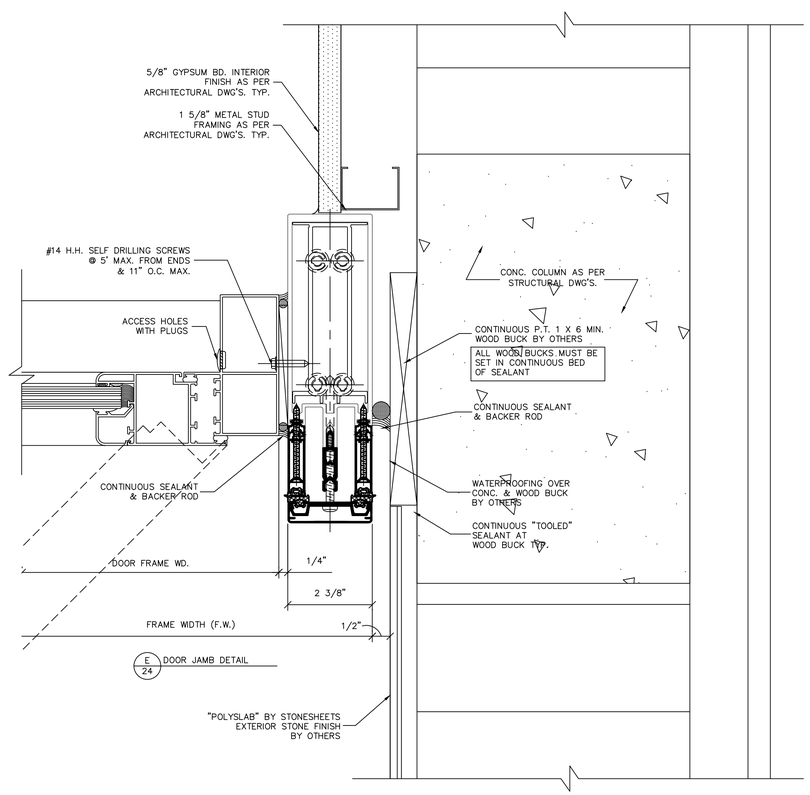

THIS DRAWING IS AN INSTRUMENT OF SERVICE AND IS THE PROPERTY OF BROMLEY COOK ENGINEERING, INC., AND IS NOT TO BE REPRODUCED IN WHOLE OR IN PART WITHOUT THE EXPRESS WRITTEN PERMISSION OF BROMLEY COOK ENGINEERING, INC.

REVISIONS

NO.	DATE	DESCRIPTION

SEAL:

WILLIAM D. COOK P.E.
FLA P.E. # 43904
FLA S.I. # 2008

BROMLEY • COOK ENGINEERING, INC.
STRUCTURAL ENGINEERING SERVICES
5440 N.W. 33RD AVENUE SUITE 100
FORT LAUDERDALE, FLORIDA 33309
TEL: (954) 772-4624 FAX: (954) 772-4634

PROJECT:
NEW WINDOWS & SLIDING GLASS DOORS FOR:
HUBER RESIDENCE
12020 S.W. 77 AVENUE
PINECREST, FL 33156
CONTRACTOR:
RELIANCE WINDOW SYSTEMS, INC.

DATE:	02/22/2023
DRAWN BY:	M.G.
CHECKED BY:	A.G.
SCALE:	6"=1'-0"

PROJECT NO.

SHEET
24/24