MARTINEZ TRUSS CO., INC.

9280 NW SOUTH RIVER DR. - MEDLEY, FL 33166
Office: (305)883-6261
Fax: (305)885-2925
info@MartinezTruss.com

Order #: 24070306

Customer Information

Name:
LT SYNERGY HOMES, LLC

Address:
11823 SW 233RD TER

City, State, Zip:
Princeton, FL 33032

Job Information

Name:
7725 RES.

Address:
7725 S.W. 114th ST.

City, State, Zip:
Pinecrest, FL 33156

Building Code: FBC 8th Ed. 2023

Roof Loading:	*Wind Loading:*
TC LL: 30 psf	Wind Standard: ASCE 7-22
TC DL: 15 psf	Wind Speed: 175
BC LL: 0 psf	WindLoadType: MWFRS & C&C
BC DL: 10 psf	Wind Usage: Residential - CAT II

Project Engineer of Record

☒ NO EXEMPTION TAKEN ☐ REVISED & RESUBMIT
☐ MAKE CORRECTIONS NOTED ☐ REJECTED

Corrections or comments made on the shop drawings during this review do not relieve the contractor from compliance with requirements of the drawings and specifications. The check is only for review or compliance with the design concept of the project and general compliance with the information given in the contract documents. The contractor is responsible for: confirming and correcting all quantities and dimensions; selecting fabrication processes and techniques of construction; coordinating his work with that of other trades and performing his work in a safe and satisfactory manner.

By CN Date JULY 2024

Nodal Structures, Inc.

This cover sheet provided as per Florida Statute 61G15-31.003 in lieu of aigning and sealing each individual sheet. An Index sheet of truss sesigns is attached which is numbered and with the indentification and date of each drawing.

Engineer of Truss Design Package
JOSE MARTINEZ
FL Reg. Eng. No 031509
24 EAST 5th St. #1D
HIALEAH, FL 33010

JOSE A. MARTINEZ LICENSE No. 031509 STATE OF FLORIDA PROFESSIONAL ENGINEER

Digitally signed by JOSE A MARTINEZ
Date: 2024.08.05 13:51:24 -04'00'

#	SEQN	Item Desc	Date
1	206499	1T	7/24/2024
2	139353	1TA	7/24/2024
3	139363	1MH23	7/24/2024
4	139313	1MH23A	7/24/2024
5	206502	1MH21	7/24/2024
6	139300	1MH21A	7/24/2024
7	206505	1MH20	7/24/2024
8	139369	1MH19	7/24/2024
9	139297	1MH19A	7/24/2024
10	206508	1MH18	7/24/2024
11	139294	1MH17	7/24/2024
12	139381	1MH17P	7/24/2024
13	206511	1MH16	7/24/2024
14	138824	1MH15	7/24/2024
15	139375	1MH15P	7/24/2024
16	206514	1MH14	7/24/2024
17	206517	1MH13	7/24/2024
18	139347	1MH13P	7/24/2024
19	206522	1MH12	7/24/2024
20	206525	1MH11	7/24/2024
21	139331	1MH11P	7/24/2024
22	206528	1MH10	7/24/2024
23	206531	1MH9	7/24/2024
24	139328	1MH9P	7/24/2024
25	206534	1MH8	7/24/2024
26	139569	1MH7G	7/24/2024
27	139575	1MH7GP	7/24/2024
28	139578	1MH6G	7/24/2024
29	206537	1M	7/24/2024
30	206540	1MA	7/24/2024
31	206546	2T	7/24/2024
32	206549	2H15	7/24/2024
33	206552	2H13	7/24/2024
34	206561	2H11	7/24/2024
35	206564	2H11P	7/24/2024
36	206567	2H9	7/24/2024
37	206570	2H9P	7/24/2024
38	139581	2H7G	7/24/2024
39	139584	2H7GP	7/24/2024
40	204239	3T	7/24/2024
41	204245	3H13	7/24/2024
42	204236	3H13A	7/24/2024
43	204248	3H11	7/24/2024
44	204251	3H11A	7/24/2024
45	204256	3H9	7/24/2024
46	204264	3H9A	7/24/2024
47	204272	3H7	7/24/2024
48	139642	3H7G	7/24/2024
49	204357	3H5G	7/24/2024
50	206573	4MH9	7/24/2024
51	206576	4MH7	7/24/2024
52	206579	4MH5	7/24/2024
53	139607	4MH3G	7/24/2024
54	206582	4MH9A	7/24/2024
55	139482	4MH7A	7/24/2024
56	204749	4MH5A	7/24/2024
57	139612	4MH3AG	7/24/2024
58	206585	5T	7/24/2024
59	204323	5TA	7/24/2024
60	204335	5TB	7/24/2024
61	204360	5TC	7/24/2024
62	203649	6T	7/24/2024
63	203654	6TA	7/24/2024
64	206588	6TP	7/24/2024
65	206591	6TAP	7/24/2024
66	206594	6H9P	7/24/2024
67	139592	6H7GP	7/24/2024
68	139598	6H7AGP	7/24/2024
69	139507	7T	7/24/2024
70	206599	7TA	7/24/2024
71	139513	7TB	7/24/2024
72	139601	7H7GP	7/24/2024
73	206602	8T	7/24/2024
74	139604	8H7G	7/24/2024
75	139618	9FRTG	7/24/2024
76	139615	9FRTAG	7/24/2024
77	204780	9FRTBG	7/24/2024
78	139621	9MH21G	7/24/2024

Order #: 24070306 **INDEX SHEET**

#	SEQN	Item Desc	Date
79	139627	9MH21AG	7/24/2024
80	139630	9MG	7/24/2024
81	139633	10MG	7/24/2024
82	139639	11MH5G	7/24/2024
83	139516	12M3G	7/24/2024
84	204744	12M3AG	7/24/2024
85	206605	CJ7	7/24/2024
86	139545	CJ7A	7/24/2024
87	139548	CJ7B	7/24/2024
88	139551	CJ7P	7/24/2024
89	206608	CJ7AP	7/24/2024
90	206611	CJ7BP	7/24/2024
91	206614	CJ7CP	7/24/2024
92	204019	CJ6	7/24/2024
93	204016	CJ38	7/24/2024
94	204013	CJ3	7/24/2024
95	203777	J7	7/24/2024
96	203734	J7BP	7/24/2024
97	206649	J7B	7/24/2024
98	203709	J7P	7/24/2024
99	203715	J7AP	7/24/2024
100	203878	J7G	7/24/2024
101	203870	J6	7/24/2024
102	203780	JB5AP	7/24/2024
103	203783	JB5A	7/24/2024
104	203786	JB5B	7/24/2024
105	203799	JB5C	7/24/2024
106	203805	JB5D	7/24/2024
107	203808	JB5P	7/24/2024
108	203811	JB5BP	7/24/2024
109	203814	JB3	7/24/2024
110	203817	JB3A	7/24/2024
111	203820	JB3B	7/24/2024
112	203831	JB3C	7/24/2024
113	203837	JB3P	7/24/2024
114	203851	JB3AP	7/24/2024
115	203845	JB3BP	7/24/2024
116	203848	JB1	7/24/2024
117	203856	JB1A	7/24/2024
118	203864	JB1B	7/24/2024
119	203867	JB1C	7/24/2024
120	139525	VMH18	7/24/2024
121	139528	VMH16	7/24/2024
122	139531	VMH14	7/24/2024
123	204037	VMH12	7/24/2024
124	204040	VMH11	7/24/2024
125	204043	VMH4	7/24/2024
126	204046	VM4	7/24/2024
127	204049	VM2	7/24/2024

#	SEQN	Item Desc	Date

#	SEQN	Item Desc	Date

SEQN: 206499 / T55 / SPEC FROM:	Ply: 1 Qty: 5 Wgt: 169.4 lbs	**Job Number:** 24070306 7725 RES. **Truss Label:** 1T	DRW: ... / ... 07/24/2024

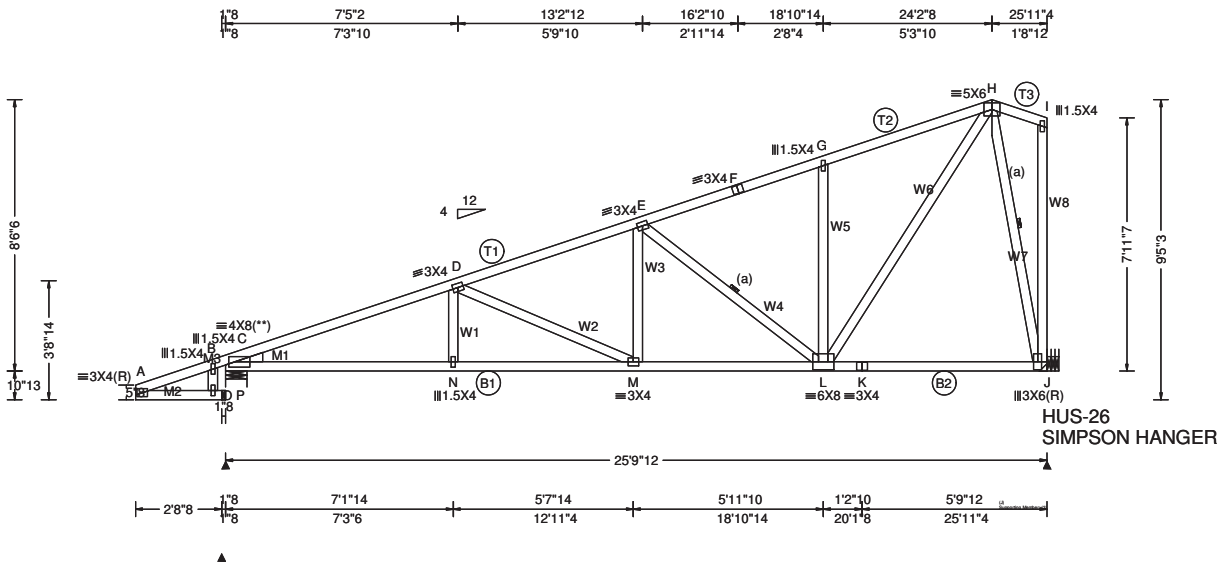

Loading Criteria (psf)

TCLL:	30.00
TCDL:	15.00
BCLL:	0.00
BCDL:	10.00
Des Ld:	55.00
NCBCLL:	10.00
Soffit:	2.00

Load Duration: 1.25
Spacing: 24.0 "

Wind Criteria
Wind Std: ASCE 7-22
Speed: 175 mph
Enclosure: Closed
Risk Category: II
EXP: C Kzt: NA
Mean Height: 16.05 ft
TCDL: 6.0 psf
BCDL: 6.0 psf
MWFRS Parallel Dist: h to 2h
C&C Dist a: 3.00 ft
Loc. from endwall: not in 9.00 ft
GCpi: 0.18
Wind Duration: 1.60

Snow Criteria (Pg,Pf in PSF)
Pg: NA Ct: NA CAT: NA
Pf: NA Ce: NA
Lu: NA Cs: NA
Snow Duration: NA

Building Code:
FBC 8th Ed. 2023 Res. HVHZ
TPI Std: 2014
Rep Fac: Yes
FT/RT:20(0)/10(0)
Plate Type(s):
WAVE

Defl/CSI Criteria

PP Deflection in	loc	L/defl	L/#
VERT(LL): 0.165	D	999	360
VERT(CL): 0.286	D	999	240
HORZ(LL): 0.046	J	-	-
HORZ(TL): 0.081	J	-	-

Creep Factor: 2.0
Max TC CSI: 0.697
Max BC CSI: 0.914
Max Web CSI: 0.895
Mfg Specified Camber:

VIEW Ver: 23.02.01A.1204.18

▲ Maximum Reactions (lbs)

Loc	Gravity R+	/ R-	/ Rh	Non-Gravity / Rw	/ U	/ RL
P	-	/-	/274	/-	/-	/276
B	1697	/-	/274	/1099	/549	/387
J	1531	/-	/-	/939	/497	/-

Wind reactions based on C&C
P Brg Wid = 1.5 Min Req = -
B Brg Wid = 8.0 Min Req = 2.0 (Truss)
J Brg Wid = - Min Req = -
Bearing B is a rigid surface.

Maximum Top Chord Forces Per Ply (lbs)

Chords	Tens.	Comp.	Chords	Tens.	Comp.
A - B	308	- 206	E - F	302	- 1369
B - C	339	- 207	F - G	312	- 1283
C - D	687	- 3122	G - H	428	- 1378
D - E	528	- 2300	H - I	27	- 24

Maximum Bot Chord Forces Per Ply (lbs)

Chords	Tens.	Comp.	Chords	Tens.	Comp.
C - N	2875	- 977	L - K	278	- 98
N - M	2871	- 980	K - J	278	- 98
M - L	2079	- 701			

Maximum Web Forces Per Ply (lbs)

Webs	Tens.	Comp.	Webs	Tens.	Comp.
A - O	232	- 273	E - L	394	- 1093
B - O	56	- 7	G - L	305	- 550
O - P	237	- 276	L - H	1740	- 545
N - D	221	0	H - J	477	- 1354
D - M	305	- 849	I - J	63	- 77
M - E	461	- 71			

Lumber
Top chord: 2x4 SP #2;
Bot chord: 2x4 SP #2;
Webs: 2x4 SP #2;
Lt Wedge: 2x4 SP #2;Lt Level Return: 2x4 SP #2;

Bracing
(a) Continuous lateral restraint equally spaced on member.

Plating Notes
(**) 1 plate(s) require special positioning. Refer to scaled plate plot details for special positioning requirements.

Loading
Truss passed check for 20 psf additional bottom chord live load in areas with 42"-high x 24"-wide clearance.

Wind
Member design based on both MWFRS and C&C.
Right end vertical not exposed to wind pressure.
Wind loading based on both gable and hip roof types.

Additional Notes
The maximum horizontal reaction is 274#
***** BEARING ANALOG MODIFIED! *****

****WARNING**** READ AND FOLLOW ALL NOTES ON THIS DRAWING!
****IMPORTANT**** FURNISH THIS DRAWING TO ALL CONTRACTORS INCLUDING THE INSTALLERS
Trusses require extreme care in fabricating, handling, shipping, installing and bracing. Refer to and follow the latest edition of BCSI (Building Component Safety Information, by TPI and SBCA) for safety practices prior to performing these functions. Installers shall provide temporary bracing per BCSI. Unless noted otherwise, top chord shall have properly attached structural sheathing and bottom chord shall have a properly attached rigid ceiling. Locations shown for permanent lateral restraint of webs shall have continuous lateral restraint (CLR), installed with diagonal bracing installed on the CLR per BCSI sections B3, B7, or B10, as applicable. Apply plates to each face of truss and position as shown above and on the Joint Details, unless noted otherwise. Refer to drawings 160A-Z for standard plate positions. Refer to job's General Notes page for additional information.
Alpine, a division of ITW Building Components Group Inc. shall not be responsible for any deviation from this drawing, any failure to build the truss in conformance with ANSI/TPI 1, or for handling, shipping, installation and bracing of trusses. A seal on this drawing or cover page listing this drawing, indicates acceptance of professional engineering responsibility solely for the design shown. The suitability and use of this drawing for any structure is the responsibility of the Building Designer per ANSI/TPI 1 Sec.2.
For more information see these web sites: Alpine: alpineitw.com; TPI: tpinst.org; SBCA: sbcacomponents.com; ICC: iccsafe.org; AWC: awc.org

SEQN: 139353 / T87 / SPEC FROM:	Ply: 1 Qty: 14 Wgt: 124.6 lbs	**Job Number:** 24070306 7725 RES. **Truss Label:** 1TA	DRW: ... / ... 07/24/2024

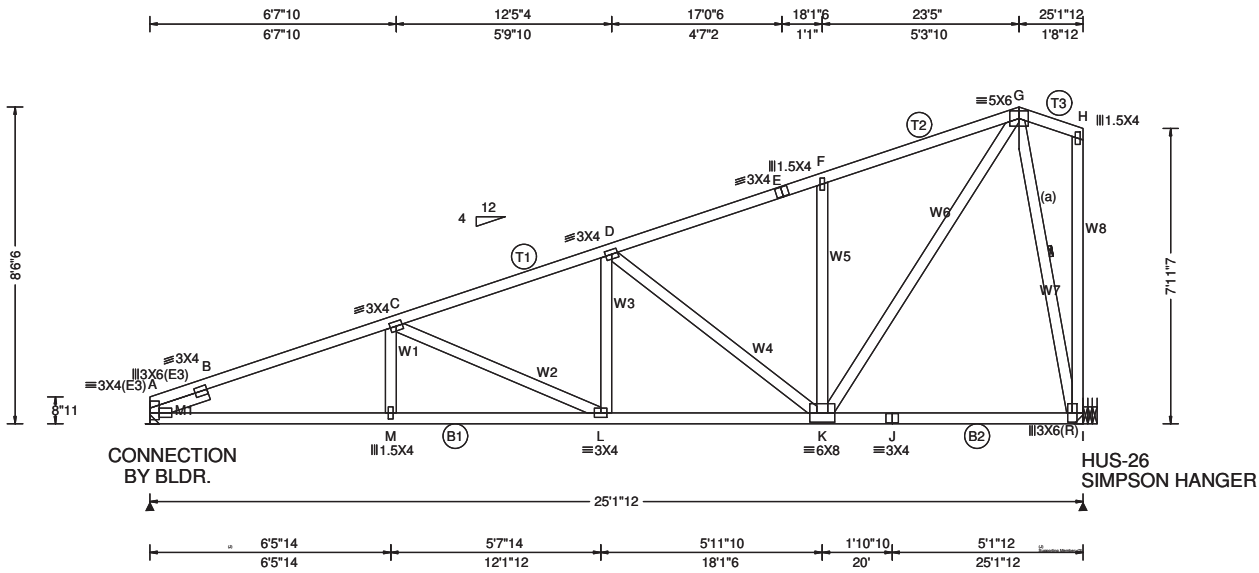

Loading Criteria (psf)

TCLL:	30.00
TCDL:	15.00
BCLL:	0.00
BCDL:	10.00
Des Ld:	55.00
NCBCLL:	10.00
Soffit:	2.00

Load Duration: 1.25
Spacing: 24.0 "

Wind Criteria
Wind Std: ASCE 7-22
Speed: 175 mph
Enclosure: Closed
Risk Category: II
EXP: C Kzt: NA
Mean Height: 16.63 ft
TCDL: 6.0 psf
BCDL: 6.0 psf
MWFRS Parallel Dist: h to 2h
C&C Dist a: 3.00 ft
Loc. from endwall: not in 9.00 ft
GCpi: 0.18
Wind Duration: 1.60

Snow Criteria (Pg,Pf in PSF)
Pg: NA Ct: NA CAT: NA
Pf: NA Ce: NA
Lu: NA Cs: NA
Snow Duration: NA

Building Code:
FBC 8th Ed. 2023 Res. HVHZ
TPI Std: 2014
Rep Fac: Yes
FT/RT:20(0)/10(0)
Plate Type(s):
WAVE

Defl/CSI Criteria

PP Deflection in	loc	L/defl	L/#
VERT(LL): 0.130	C	999	360
VERT(CL): 0.229	C	999	240
HORZ(LL): 0.040	I	-	-
HORZ(TL): 0.071	I	-	-

Creep Factor: 2.0
Max TC CSI: 0.729
Max BC CSI: 0.757
Max Web CSI: 0.959
Mfg Specified Camber:

VIEW Ver: 23.02.01A.1204.18

▲ Maximum Reactions (lbs)

Loc	Gravity R+	Gravity / R-	/ Rh	Non-Gravity / Rw	/ U	/ RL
A	1397	/-	/-	/877	/358	/420
I	1502	/-	/-	/922	/518	/-

Wind reactions based on C&C
A Brg Wid = - Min Req = -
I Brg Wid = - Min Req = -

Maximum Top Chord Forces Per Ply (lbs)

Chords	Tens.	Comp.	Chords	Tens.	Comp.
A - B	787	-3025	E - F	326	-1205
B - C	716	-2939	F - G	447	-1345
C - D	548	-2213	G - H	27	-24
D - E	322	-1336			

Maximum Bot Chord Forces Per Ply (lbs)

Chords	Tens.	Comp.	Chords	Tens.	Comp.
A - M	2715	-1011	K - J	272	-102
M - L	2711	-1014	J - I	272	-102
L - K	1998	-727			

Maximum Web Forces Per Ply (lbs)

Webs	Tens.	Comp.	Webs	Tens.	Comp.
M - C	217	0	F - K	320	-547
C - L	314	-764	K - G	1693	-569
L - D	412	-72	G - I	499	-1325
D - K	402	-1029	H - I	63	-77

Lumber

Top chord: 2x4 SP #2;
Bot chord: 2x4 SP #2;
Webs: 2x4 SP #2;
Lt Slider: 2x4 SP #2; block length = 1.654'

Bracing

(a) Continuous lateral restraint equally spaced on member.

Hangers / Ties

(J) Hanger Support Required, by others

Loading

Truss passed check for 20 psf additional bottom chord live load in areas with 42"-high x 24"-wide clearance.

Wind

Member design based on both MWFRS and C&C.

Right end vertical not exposed to wind pressure.

Wind loading based on both gable and hip roof types.

****WARNING**** READ AND FOLLOW ALL NOTES ON THIS DRAWING!
****IMPORTANT**** FURNISH THIS DRAWING TO ALL CONTRACTORS INCLUDING THE INSTALLERS
Trusses require extreme care in fabricating, handling, shipping, installing and bracing. Refer to and follow the latest edition of BCSI (Building Component Safety Information, by TPI and SBCA) for safety practices prior to performing these functions. Installers shall provide temporary bracing per BCSI. Unless noted otherwise, top chord shall have properly attached structural sheathing and bottom chord shall have a properly attached rigid ceiling. Locations shown for permanent lateral restraint of webs shall have continuous lateral restraint (CLR), installed with diagonal bracing installed on the CLR per BCSI sections B3, B7, or B10, as applicable. Apply plates to each face of truss and position as shown above and on the Joint Details, unless noted otherwise. Refer to drawings 160A-Z for standard plate positions. Refer to job's General Notes page for additional information.
Alpine, a division of ITW Building Components Group Inc. shall not be responsible for any deviation from this drawing, any failure to build the truss in conformance with ANSI/TPI 1, or for handling, shipping, installation and bracing of trusses. A seal on this drawing or cover page listing this drawing, indicates acceptance of professional engineering responsibility solely for the design shown. The suitability and use of this drawing for any structure is the responsibility of the Building Designer per ANSI/TPI 1 Sec.2.
For more information see these web sites: Alpine: alpineitw.com; TPI: tpinst.org; SBCA: sbcacomponents.com; ICC: iccsafe.org; AWC: awc.org

SEQN: 139363 / T61 / HIPS FROM:	Ply: 1 Qty: 1 Wgt: 167.3 lbs	**Job Number:** 24070306 7725 RES. **Truss Label:** 1MH23	DRW: ... / ... 07/24/2024

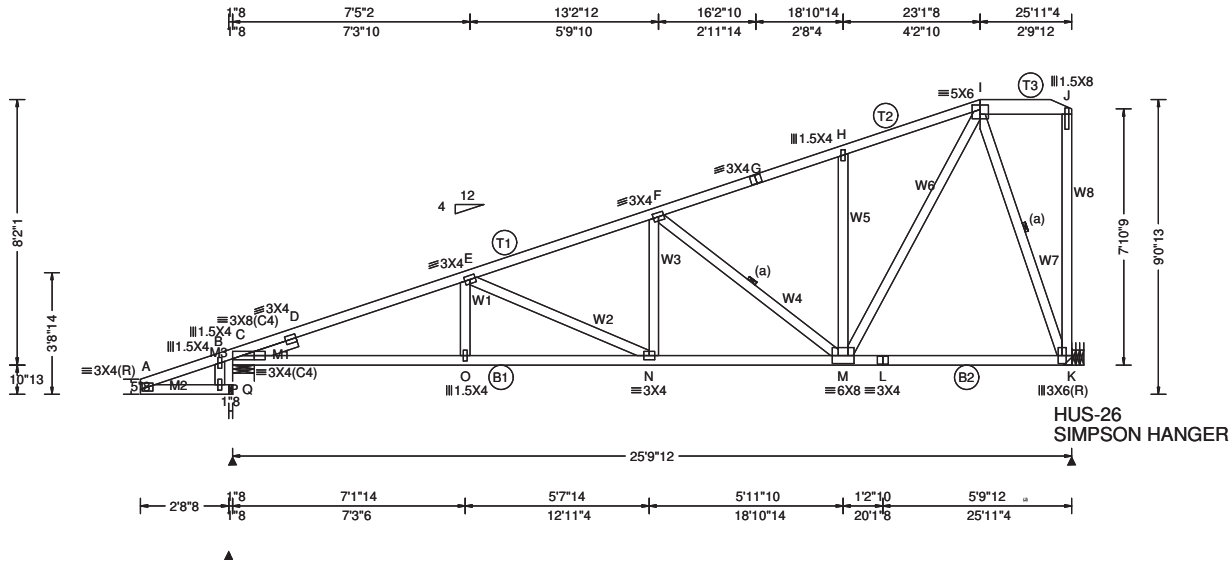

Loading Criteria (psf)

TCLL:	30.00
TCDL:	15.00
BCLL:	0.00
BCDL:	10.00
Des Ld:	55.00
NCBCLL:	10.00
Soffit:	2.00

Load Duration: 1.25
Spacing: 24.0 "

Wind Criteria
Wind Std: ASCE 7-22
Speed: 175 mph
Enclosure: Closed
Risk Category: II
EXP: C Kzt: NA
Mean Height: 15.87 ft
TCDL: 6.0 psf
BCDL: 6.0 psf
MWFRS Parallel Dist: h to 2h
C&C Dist a: 3.00 ft
Loc. from endwall: not in 9.00 ft
GCpi: 0.18
Wind Duration: 1.60

Snow Criteria (Pg,Pf in PSF)
Pg: NA Ct: NA CAT: NA
Pf: NA Ce: NA
Lu: NA Cs: NA
Snow Duration: NA

Building Code:
FBC 8th Ed. 2023 Res. HVHZ
TPI Std: 2014
Rep Fac: Yes
FT/RT:20(0)/10(0)
Plate Type(s):
WAVE

Defl/CSI Criteria

PP Deflection in	loc	L/defl	L/#
VERT(LL): 0.136	E	999	360
VERT(CL): 0.244	E	999	240
HORZ(LL): 0.042	K	-	-
HORZ(TL): 0.077	K	-	-

Creep Factor: 2.0
Max TC CSI: 0.678
Max BC CSI: 0.748
Max Web CSI: 0.660
Mfg Specified Camber:

VIEW Ver: 23.02.01A.1204.18

▲ Maximum Reactions (lbs)

Loc	Gravity R+	Gravity / R-	Gravity / Rh	Non-Gravity / Rw	Non-Gravity / U	Non-Gravity / RL
Q	-	/-	/243	/-	/-	/240
C	1696	/-	/243	/1087	/554	/456
K	1396	/-	/-	/713	/592	/-

Wind reactions based on C&C
Q Brg Wid = 1.5 Min Req = -
C Brg Wid = 8.0 Min Req = 2.0 (Truss)
K Brg Wid = - Min Req = -
Bearing C is a rigid surface.

Maximum Top Chord Forces Per Ply (lbs)

Chords	Tens.	Comp.	Chords	Tens.	Comp.
A - B	283	- 189	F - G	299	- 1291
B - C	285	- 173	G - H	310	- 1204
C - D	983	- 3260	H - I	410	- 1276
D - E	669	- 2984	I - J	3	- 4
E - F	522	- 2221			

Maximum Bot Chord Forces Per Ply (lbs)

Chords	Tens.	Comp.	Chords	Tens.	Comp.
C - O	2761	- 975	M - L	435	- 188
O - N	2756	- 978	L - K	435	- 188
N - M	2004	- 719			

Maximum Web Forces Per Ply (lbs)

Webs	Tens.	Comp.	Webs	Tens.	Comp.
A - P	214	- 239	F - M	389	- 1097
B - P	52	- 5	H - M	267	- 479
P - Q	217	- 243	M - I	1492	- 474
O - E	225	0	I - K	551	- 1281
E - N	283	- 804	J - K	107	- 133
N - F	454	- 61			

Lumber
Top chord: 2x4 SP #2; T3 2x6 SP #2;
Bot chord: 2x4 SP #2;
Webs: 2x4 SP #2;
Lt Slider: 2x4 SP #2; block length = 1.750'
Lt Level Return: 2x4 SP #2;

Bracing
(a) Continuous lateral restraint equally spaced on member.

Wind
Member design based on both MWFRS and C&C.
Right end vertical not exposed to wind pressure.
Wind loading based on both gable and hip roof types.

Additional Notes
The maximum horizontal reaction is 243#
***** BEARING ANALOG MODIFIED! *****

****WARNING**** READ AND FOLLOW ALL NOTES ON THIS DRAWING!
****IMPORTANT**** FURNISH THIS DRAWING TO ALL CONTRACTORS INCLUDING THE INSTALLERS

Trusses require extreme care in fabricating, handling, shipping, installing and bracing. Refer to and follow the latest edition of BCSI (Building Component Safety Information, by TPI and SBCA) for safety practices prior to performing these functions. Installers shall provide temporary bracing per BCSI. Unless noted otherwise, top chord shall have properly attached structural sheathing and bottom chord shall have a properly attached rigid ceiling. Locations shown for permanent lateral restraint of webs shall have continuous lateral restraint (CLR), installed with diagonal bracing installed on the CLR per BCSI sections B3, B7, or B10, as applicable. Apply plates to each face of truss and position as shown above and on the Joint Details, unless noted otherwise. Refer to drawings 160A-Z for standard plate positions. Refer to job's General Notes page for additional information.

Alpine, a division of ITW Building Components Group Inc. shall not be responsible for any deviation from this drawing, any failure to build the truss in conformance with ANSI/TPI 1, or for handling, shipping, installation and bracing of trusses. A seal on this drawing or cover page listing this drawing, indicates acceptance of professional engineering responsibility solely for the design shown. The suitability and use of this drawing for any structure is the responsibility of the Building Designer per ANSI/TPI 1 Sec.2.

For more information see these web sites: Alpine: alpineitw.com; TPI: tpinst.org; SBCA: sbcacomponents.com; ICC: iccsafe.org; AWC: awc.org

SEQN: 139313 / T107 / HIPS FROM:	Ply: 1 Qty: 1 Wgt: 154.7 lbs	**Job Number:** 24070306 7725 RES. **Truss Label:** 1MH23A	DRW: ... / ... 07/24/2024

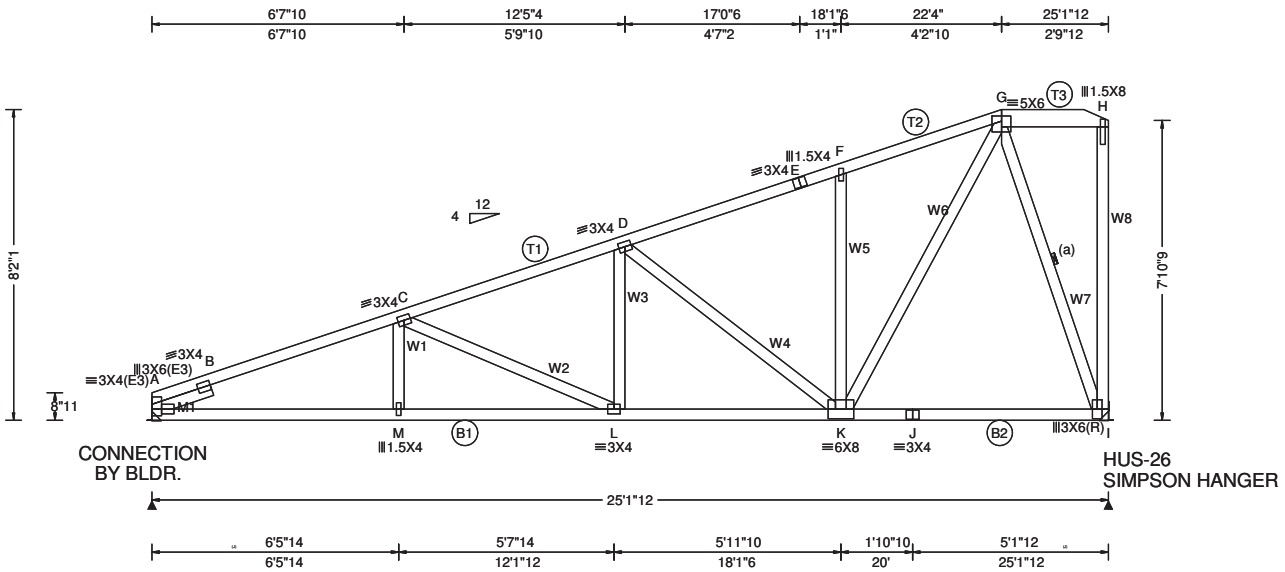

Loading Criteria (psf)

TCLL:	30.00
TCDL:	15.00
BCLL:	0.00
BCDL:	10.00
Des Ld:	55.00
NCBCLL:	10.00
Soffit:	2.00

Load Duration: 1.25
Spacing: 24.0 "

Wind Criteria
Wind Std: ASCE 7-22
Speed: 175 mph
Enclosure: Closed
Risk Category: II
EXP: C Kzt: NA
Mean Height: 16.45 ft
TCDL: 6.0 psf
BCDL: 6.0 psf
MWFRS Parallel Dist: h to 2h
C&C Dist a: 3.00 ft
Loc. from endwall: not in 9.00 ft
GCpi: 0.18
Wind Duration: 1.60

Snow Criteria (Pg,Pf in PSF)
Pg: NA Ct: NA CAT: NA
Pf: NA Ce: NA
Lu: NA Cs: NA
Snow Duration: NA

Building Code:
FBC 8th Ed. 2023 Res. HVHZ
TPI Std: 2014
Rep Fac: Yes
FT/RT:20(0)/10(0)
Plate Type(s):
WAVE

Defl/CSI Criteria

PP Deflection in	loc	L/defl	L/#
VERT(LL): 0.121	C	999	360
VERT(CL): 0.222	C	999	240
HORZ(LL): 0.039	I	-	-
HORZ(TL): 0.072	I	-	-

Creep Factor: 2.0
Max TC CSI: 0.723
Max BC CSI: 0.747
Max Web CSI: 0.995
Mfg Specified Camber:

VIEW Ver: 23.02.01A.1204.18

Lumber

Top chord: 2x4 SP #2; T3 2x6 SP #2;
Bot chord: 2x4 SP #2;
Webs: 2x4 SP #2;
Lt Slider: 2x4 SP #2; block length = 1.654'

Bracing

(a) Continuous lateral restraint equally spaced on member.

Wind

Member design based on both MWFRS and C&C.

Right end vertical not exposed to wind pressure.

Wind loading based on both gable and hip roof types.

▲Maximum Reactions (lbs)

	Gravity			Non-Gravity		
Loc	R+	/ R-	/ Rh	/ Rw	/ U	/ RL
A	1382	/-	/-	/855	/359	/430
I	1380	/-	/-	/707	/619	/-

Wind reactions based on C&C
A Brg Wid = - Min Req = -
I Brg Wid = - Min Req = -

Maximum Top Chord Forces Per Ply (lbs)

Chords	Tens.	Comp.	Chords	Tens.	Comp.
A - B	788	-2992	E - F	328	-1142
B - C	717	-2897	F - G	433	-1257
C - D	554	-2177	G - H	3	-4
D - E	324	-1272			

Maximum Bot Chord Forces Per Ply (lbs)

Chords	Tens.	Comp.	Chords	Tens.	Comp.
A - M	2675	-1036	K - J	430	-197
M - L	2671	-1039	J - I	430	-197
L - K	1963	-756			

Maximum Web Forces Per Ply (lbs)

Webs	Tens.	Comp.	Webs	Tens.	Comp.
M - C	217	0	F - K	280	-476
C - L	308	-757	K - G	1467	-502
L - D	430	-69	G - I	577	-1265
D - K	408	-1067	H - I	110	-133

****WARNING**** READ AND FOLLOW ALL NOTES ON THIS DRAWING!
****IMPORTANT**** FURNISH THIS DRAWING TO ALL CONTRACTORS INCLUDING THE INSTALLERS
Trusses require extreme care in fabricating, handling, shipping, installing and bracing. Refer to and follow the latest edition of BCSI (Building Component Safety Information, by TPI and SBCA) for safety practices prior to performing these functions. Installers shall provide temporary bracing per BCSI. Unless noted otherwise, top chord shall have properly attached structural sheathing and bottom chord shall have a properly attached rigid ceiling. Locations shown for permanent lateral restraint of webs shall have continuous lateral restraint (CLR), installed with diagonal bracing installed on the CLR per BCSI sections B3, B7, or B10, as applicable. Apply plates to each face of truss and position as shown above and on the Joint Details, unless noted otherwise. Refer to drawings 160A-Z for standard plate positions. Refer to job's General Notes page for additional information.
Alpine, a division of ITW Building Components Group Inc. shall not be responsible for any deviation from this drawing, any failure to build the truss in conformance with ANSI/TPI 1, or for handling, shipping, installation and bracing of trusses. A seal on this drawing or cover page listing this drawing, indicates acceptance of professional engineering responsibility solely for the design shown. The suitability and use of this drawing for any structure is the responsibility of the Building Designer per ANSI/TPI 1 Sec.2.
For more information see these web sites: Alpine: alpineitw.com; TPI: tpinst.org; SBCA: sbcacomponents.com; ICC: iccsafe.org; AWC: awc.org

SEQN: 206502 / T52 / HIPM FROM:	Ply: 1 Qty: 1 Wgt: 163.8 lbs	**Job Number:** 24070306 7725 RES. **Truss Label:** 1MH21	DRW: ... / ... 07/24/2024

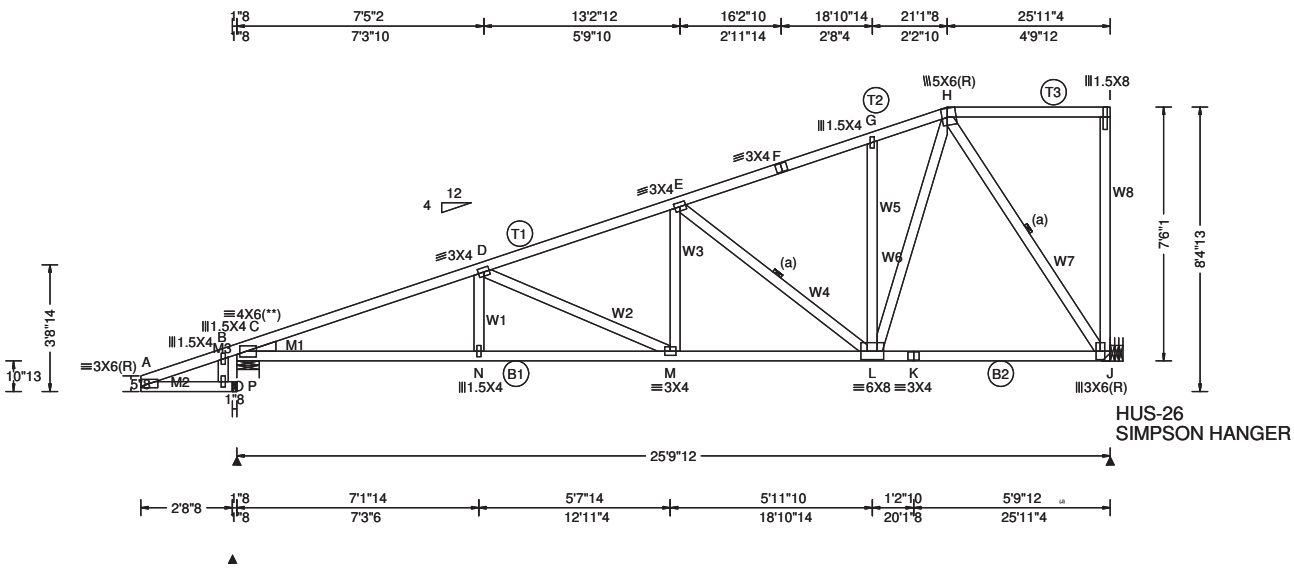

Loading Criteria (psf)

TCLL:	30.00
TCDL:	15.00
BCLL:	0.00
BCDL:	10.00
Des Ld:	55.00
NCBCLL:	10.00
Soffit:	2.00

Load Duration: 1.25
Spacing: 24.0 "

Wind Criteria
Wind Std: ASCE 7-22
Speed: 175 mph
Enclosure: Closed
Risk Category: II
EXP: C Kzt: NA
Mean Height: 15.53 ft
TCDL: 6.0 psf
BCDL: 6.0 psf
MWFRS Parallel Dist: h to 2h
C&C Dist a: 3.00 ft
Loc. from endwall: not in 9.00 ft
GCpi: 0.18
Wind Duration: 1.60

Snow Criteria (Pg,Pf in PSF)
Pg: NA Ct: NA CAT: NA
Pf: NA Ce: NA
Lu: NA Cs: NA
Snow Duration: NA

Building Code:
FBC 8th Ed. 2023 Res. HVHZ
TPI Std: 2014
Rep Fac: Yes
FT/RT:20(0)/10(0)
Plate Type(s):
WAVE

Defl/CSI Criteria

PP Deflection in	loc	L/defl	L/#
VERT(LL): 0.154	D	999	360
VERT(CL): 0.276	D	999	240
HORZ(LL): 0.047	J	-	-
HORZ(TL): 0.085	J	-	-

Creep Factor: 2.0
Max TC CSI: 0.691
Max BC CSI: 0.894
Max Web CSI: 0.578
Mfg Specified Camber:

VIEW Ver: 23.02.01A.1204.18

▲ Maximum Reactions (lbs)

Loc	Gravity R+	/ R-	/ Rh	Non-Gravity / Rw	/ U	/ RL
P	-	/-	/271	/-	/-	/276
B	1683	/-	/271	/1043	/580	/354
J	1409	/-	/-	/729	/795	/-

Wind reactions based on C&C
P Brg Wid = 1.5 Min Req = -
B Brg Wid = 8.0 Min Req = 2.0 (Truss)
J Brg Wid = - Min Req = -
Bearing B is a rigid surface.

Maximum Top Chord Forces Per Ply (lbs)

Chords	Tens.	Comp.	Chords	Tens.	Comp.
A - B	306	- 207	E - F	408	- 1301
B - C	336	- 208	F - G	418	- 1215
C - D	795	- 3076	G - H	498	- 1268
D - E	639	- 2264	H - I	0	0

Maximum Bot Chord Forces Per Ply (lbs)

Chords	Tens.	Comp.	Chords	Tens.	Comp.
C - N	2832	- 1055	L - K	758	- 358
N - M	2828	- 1058	K - J	758	- 358
M - L	2046	- 794			

Maximum Web Forces Per Ply (lbs)

Webs	Tens.	Comp.	Webs	Tens.	Comp.
A - O	234	- 274	E - L	403	- 1142
B - O	56	- 7	G - L	228	- 413
O - P	239	- 276	L - H	1333	- 405
N - D	221	0	H - J	644	- 1364
D - M	288	- 836	I - J	293	- 216
M - E	477	- 65			

Lumber
Top chord: 2x4 SP #2;
Bot chord: 2x4 SP #2;
Webs: 2x4 SP #2;
Lt Wedge: 2x4 SP #2;Lt Level Return: 2x4 SP #2;

Bracing
(a) Continuous lateral restraint equally spaced on member.

Plating Notes
(**) 1 plate(s) require special positioning. Refer to scaled plate plot details for special positioning requirements.

Wind
Member design based on both MWFRS and C&C.
Right end vertical not exposed to wind pressure.
Wind loading based on both gable and hip roof types.

Additional Notes
The maximum horizontal reaction is 271#
***** BEARING ANALOG MODIFIED! *****

****WARNING**** READ AND FOLLOW ALL NOTES ON THIS DRAWING!
****IMPORTANT**** FURNISH THIS DRAWING TO ALL CONTRACTORS INCLUDING THE INSTALLERS
Trusses require extreme care in fabricating, handling, shipping, installing and bracing. Refer to and follow the latest edition of BCSI (Building Component Safety Information, by TPI and SBCA) for safety practices prior to performing these functions. Installers shall provide temporary bracing per BCSI. Unless noted otherwise, top chord shall have properly attached structural sheathing and bottom chord shall have a properly attached rigid ceiling. Locations shown for permanent lateral restraint of webs shall have continuous lateral restraint (CLR), installed with diagonal bracing installed on the CLR per BCSI sections B3, B7, or B10, as applicable. Apply plates to each face of truss and position as shown above and on the Joint Details, unless noted otherwise. Refer to drawings 160A-Z for standard plate positions. Refer to job's General Notes page for additional information.
Alpine, a division of ITW Building Components Group Inc. shall not be responsible for any deviation from this drawing, any failure to build the truss in conformance with ANSI/TPI 1, or for handling, shipping, installation and bracing of trusses. A seal on this drawing or cover page listing this drawing, indicates acceptance of professional engineering responsibility solely for the design shown. The suitability and use of this drawing for any structure is the responsibility of the Building Designer per ANSI/TPI 1 Sec.2.
For more information see these web sites: Alpine: alpineitw.com; TPI: tpinst.org; SBCA: sbcacomponents.com; ICC: iccsafe.org; AWC: awc.org

SEQN: 139300 / T98 / HIPM FROM:	Ply: 1 Qty: 1 Wgt: 151.2 lbs	**Job Number:** 24070306 7725 RES. **Truss Label:** 1MH21A	DRW: ... / ... 07/24/2024

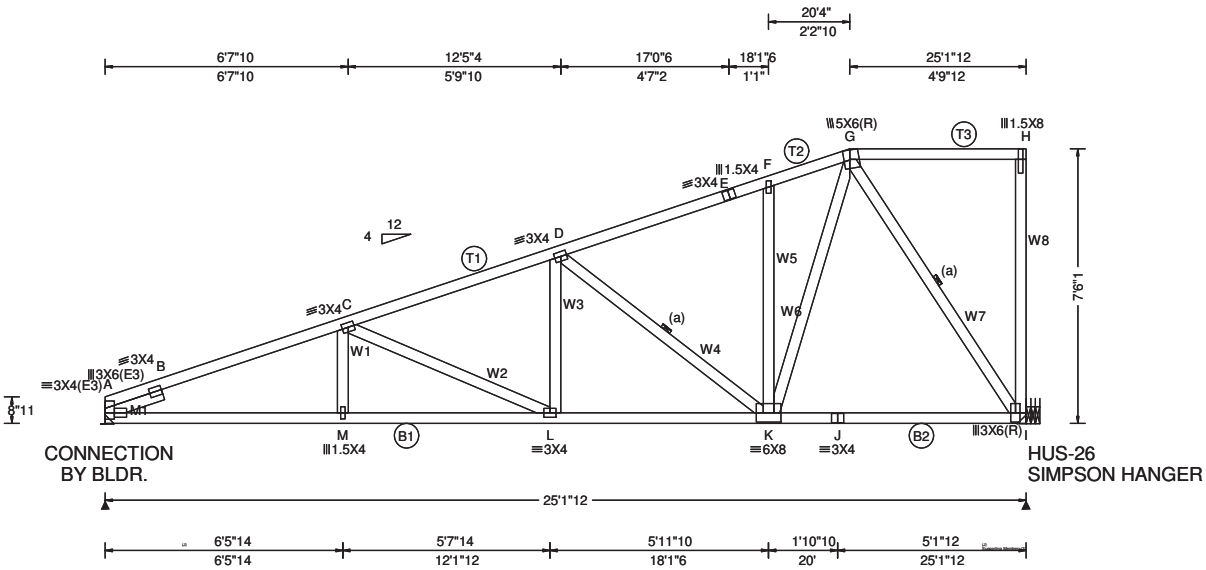

Loading Criteria (psf)

TCLL:	30.00
TCDL:	15.00
BCLL:	0.00
BCDL:	10.00
Des Ld:	55.00
NCBCLL:	10.00
Soffit:	2.00

Load Duration: 1.25
Spacing: 24.0 "

Wind Criteria
Wind Std: ASCE 7-22
Speed: 175 mph
Enclosure: Closed
Risk Category: II
EXP: C Kzt: NA
Mean Height: 16.12 ft
TCDL: 6.0 psf
BCDL: 6.0 psf
MWFRS Parallel Dist: h to 2h
C&C Dist a: 3.00 ft
Loc. from endwall: not in 9.00 ft
GCpi: 0.18
Wind Duration: 1.60

Snow Criteria (Pg,Pf in PSF)
Pg: NA Ct: NA CAT: NA
Pf: NA Ce: NA
Lu: NA Cs: NA
Snow Duration: NA

Building Code:
FBC 8th Ed. 2023 Res. HVHZ
TPI Std: 2014
Rep Fac: Yes
FT/RT:20(0)/10(0)
Plate Type(s):
WAVE

Defl/CSI Criteria

PP Deflection in	loc	L/defl	L/#
VERT(LL): 0.120	C	999	360
VERT(CL): 0.220	C	999	240
HORZ(LL): 0.041	I	-	-
HORZ(TL): 0.076	I	-	-

Creep Factor: 2.0
Max TC CSI: 0.716
Max BC CSI: 0.747
Max Web CSI: 0.520
Mfg Specified Camber:

VIEW Ver: 23.02.01A.1204.18

Lumber

Top chord: 2x4 SP #2;
Bot chord: 2x4 SP #2;
Webs: 2x4 SP #2;
Lt Slider: 2x4 SP #2; block length = 1.654'

Bracing

(a) Continuous lateral restraint equally spaced on member.

Hangers / Ties

(J) Hanger Support Required, by others

Wind

Member design based on both MWFRS and C&C.

Right end vertical not exposed to wind pressure.

Wind loading based on both gable and hip roof types.

▲ Maximum Reactions (lbs)

	Gravity			Non-Gravity		
Loc	R+	/ R-	/ Rh	/ Rw	/ U	/ RL
A	1382	/-	/-	/818	/393	/390
I	1380	/-	/-	/716	/819	/-

Wind reactions based on C&C
A Brg Wid = - Min Req = -
I Brg Wid = - Min Req = -

Maximum Top Chord Forces Per Ply (lbs)

Chords	Tens.	Comp.	Chords	Tens.	Comp.
A - B	854	- 2993	E - F	432	- 1137
B - C	809	- 2896	F - G	515	- 1235
C - D	656	- 2179	G - H	0	0
D - E	428	- 1268			

Maximum Bot Chord Forces Per Ply (lbs)

Chords	Tens.	Comp.	Chords	Tens.	Comp.
A - M	2674	- 1082	K - J	739	- 369
M - L	2670	- 1085	J - I	739	- 369
L - K	1966	- 815			

Maximum Web Forces Per Ply (lbs)

Webs	Tens.	Comp.	Webs	Tens.	Comp.
M - C	218	0	F - K	240	- 410
C - L	294	- 753	K - G	1292	- 422
L - D	428	- 64	G - I	665	- 1331
D - K	409	- 1079	H - I	299	- 216

****WARNING**** READ AND FOLLOW ALL NOTES ON THIS DRAWING!
****IMPORTANT**** FURNISH THIS DRAWING TO ALL CONTRACTORS INCLUDING THE INSTALLERS
Trusses require extreme care in fabricating, handling, shipping, installing and bracing. Refer to and follow the latest edition of BCSI (Building Component Safety Information, by TPI and SBCA) for safety practices prior to performing these functions. Installers shall provide temporary bracing per BCSI. Unless noted otherwise, top chord shall have properly attached structural sheathing and bottom chord shall have a properly attached rigid ceiling. Locations shown for permanent lateral restraint of webs shall have continuous lateral restraint (CLR), installed with diagonal bracing installed on the CLR per BCSI sections B3, B7, or B10, as applicable. Apply plates to each face of truss and position as shown above and on the Joint Details, unless noted otherwise. Refer to drawings 160A-Z for standard plate positions. Refer to job's General Notes page for additional information.
Alpine, a division of ITW Building Components Group Inc. shall not be responsible for any deviation from this drawing, any failure to build the truss in conformance with ANSI/TPI 1, or for handling, shipping, installation and bracing of trusses. A seal on this drawing or cover page listing this drawing, indicates acceptance of professional engineering responsibility solely for the design shown. The suitability and use of this drawing for any structure is the responsibility of the Building Designer per ANSI/TPI 1 Sec.2.
For more information see these web sites: Alpine: alpineitw.com; TPI: tpinst.org; SBCA: sbcacomponents.com; ICC: iccsafe.org; AWC: awc.org

SEQN: 206505 / T80 / HIPM FROM:	Ply: 1 Qty: 1 Wgt: 131.6 lbs	**Job Number:** 24070306 7725 RES. **Truss Label:** 1MH20	DRW: ... / ... 07/24/2024

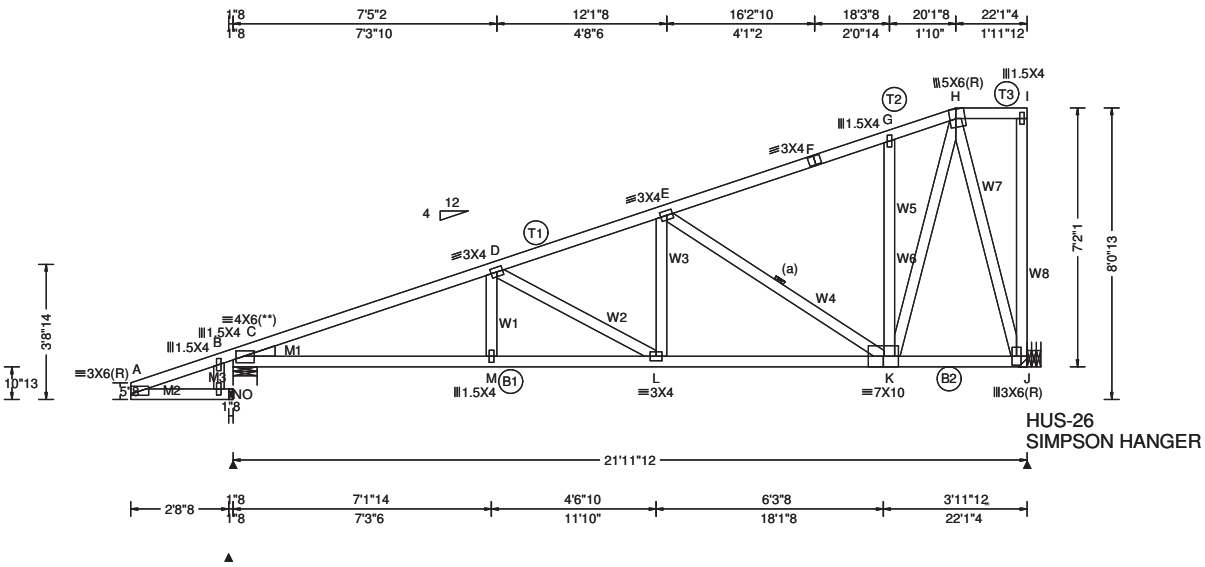

Loading Criteria (psf)

TCLL:	30.00
TCDL:	15.00
BCLL:	0.00
BCDL:	10.00
Des Ld:	55.00
NCBCLL:	10.00
Soffit:	2.00

Load Duration: 1.25
Spacing: 24.0 "

Wind Criteria
Wind Std: ASCE 7-22
Speed: 175 mph
Enclosure: Closed
Risk Category: II
EXP: C Kzt: NA
Mean Height: 15.37 ft
TCDL: 6.0 psf
BCDL: 6.0 psf
MWFRS Parallel Dist: h to 2h
C&C Dist a: 3.00 ft
Loc. from endwall: not in 9.00 ft
GCpi: 0.18
Wind Duration: 1.60

Snow Criteria (Pg,Pf in PSF)
Pg: NA Ct: NA CAT: NA
Pf: NA Ce: NA
Lu: NA Cs: NA
Snow Duration: NA

Building Code:
FBC 8th Ed. 2023 Res. HVHZ
TPI Std: 2014
Rep Fac: Yes
FT/RT:20(0)/10(0)
Plate Type(s):
WAVE

Defl/CSI Criteria

PP Deflection in	loc	L/defl	L/#
VERT(LL): 0.106	D	999	360
VERT(CL): 0.188	D	999	240
HORZ(LL): 0.032	J	-	-
HORZ(TL): 0.058	J	-	-

Creep Factor: 2.0
Max TC CSI: 0.620
Max BC CSI: 0.628
Max Web CSI: 0.995
Mfg Specified Camber:

VIEW Ver: 23.02.01A.1204.18

▲ Maximum Reactions (lbs)

Loc	Gravity R+	Gravity / R-	Gravity / Rh	Non-Gravity / Rw	Non-Gravity / U	Non-Gravity / RL
O	-	/-	/255	/-	/-	/261
B	1474	/-	/255	/953	/616	/399
J	1196	/-	/-	/633	/658	/-

Wind reactions based on C&C
O Brg Wid = 1.5 Min Req = -
B Brg Wid = 8.0 Min Req = 1.7 (Truss)
J Brg Wid = - Min Req = -
Bearing B is a rigid surface.

Maximum Top Chord Forces Per Ply (lbs)

Chords	Tens.	Comp.	Chords	Tens.	Comp.
A - B	292	- 228	E - F	208	- 770
B - C	321	- 229	F - G	216	- 653
C - D	712	- 2463	G - H	323	- 745
D - E	539	- 1788	H - I	0	0

Maximum Bot Chord Forces Per Ply (lbs)

Chords	Tens.	Comp.	Chords	Tens.	Comp.
C - M	2251	- 1007	L - K	1607	- 723
M - L	2247	- 1010	K - J	312	- 155

Maximum Web Forces Per Ply (lbs)

Webs	Tens.	Comp.	Webs	Tens.	Comp.
A - N	256	- 256	E - K	510	- 1158
B - N	54	- 9	G - K	323	- 483
N - O	261	- 257	K - H	1290	- 555
M - D	197	0	H - J	562	- 1126
D - L	325	- 710	I - J	130	- 89
L - E	480	- 100			

Lumber
Top chord: 2x4 SP #2;
Bot chord: 2x4 SP #2;
Webs: 2x4 SP #2;
Lt Wedge: 2x4 SP #2;Lt Level Return: 2x4 SP #2;

Bracing
(a) Continuous lateral restraint equally spaced on member.

Plating Notes
(**) 1 plate(s) require special positioning. Refer to scaled plate plot details for special positioning requirements.

Wind
Member design based on both MWFRS and C&C.
Right end vertical not exposed to wind pressure.
Wind loading based on both gable and hip roof types.

Additional Notes
The maximum horizontal reaction is 255#
***** BEARING ANALOG MODIFIED! *****

****WARNING**** READ AND FOLLOW ALL NOTES ON THIS DRAWING!
****IMPORTANT**** FURNISH THIS DRAWING TO ALL CONTRACTORS INCLUDING THE INSTALLERS
Trusses require extreme care in fabricating, handling, shipping, installing and bracing. Refer to and follow the latest edition of BCSI (Building Component Safety Information, by TPI and SBCA) for safety practices prior to performing these functions. Installers shall provide temporary bracing per BCSI. Unless noted otherwise, top chord shall have properly attached structural sheathing and bottom chord shall have a properly attached rigid ceiling. Locations shown for permanent lateral restraint of webs shall have continuous lateral restraint (CLR), installed with diagonal bracing installed on the CLR per BCSI sections B3, B7, or B10, as applicable. Apply plates to each face of truss and position as shown above and on the Joint Details, unless noted otherwise. Refer to drawings 160A-Z for standard plate positions. Refer to job's General Notes page for additional information.
Alpine, a division of ITW Building Components Group Inc. shall not be responsible for any deviation from this drawing, any failure to build the truss in conformance with ANSI/TPI 1, or for handling, shipping, installation and bracing of trusses. A seal on this drawing or cover page listing this drawing, indicates acceptance of professional engineering responsibility solely for the design shown. The suitability and use of this drawing for any structure is the responsibility of the Building Designer per ANSI/TPI 1 Sec.2.
For more information see these web sites: Alpine: alpineitw.com; TPI: tpinst.org; SBCA: sbcacomponents.com; ICC: iccsafe.org; AWC: awc.org

SEQN: 139369 / T54 / HIPM FROM:	Ply: 1 Qty: 1 Wgt: 149.8 lbs	**Job Number:** 24070306 7725 RES. **Truss Label:** 1MH19	DRW: ... / ... 07/24/2024

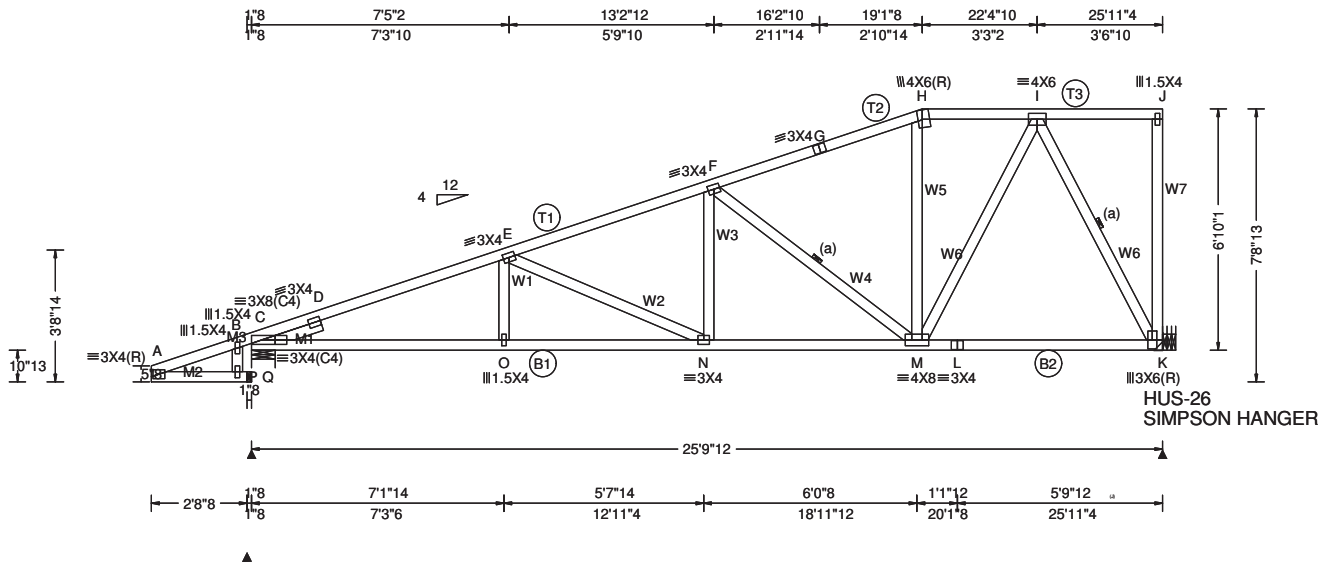

Loading Criteria (psf)

TCLL:	30.00
TCDL:	15.00
BCLL:	0.00
BCDL:	10.00
Des Ld:	55.00
NCBCLL:	10.00
Soffit:	2.00

Load Duration: 1.25
Spacing: 24.0 "

Wind Criteria
Wind Std: ASCE 7-22
Speed: 175 mph
Enclosure: Closed
Risk Category: II
EXP: C Kzt: NA
Mean Height: 15.20 ft
TCDL: 6.0 psf
BCDL: 6.0 psf
MWFRS Parallel Dist: h to 2h
C&C Dist a: 3.00 ft
Loc. from endwall: not in 9.00 ft
GCpi: 0.18
Wind Duration: 1.60

Snow Criteria (Pg,Pf in PSF)
Pg: NA Ct: NA CAT: NA
Pf: NA Ce: NA
Lu: NA Cs: NA
Snow Duration: NA

Building Code:
FBC 8th Ed. 2023 Res. HVHZ
TPI Std: 2014
Rep Fac: Yes
FT/RT:20(0)/10(0)
Plate Type(s):
WAVE

Defl/CSI Criteria

PP Deflection in	loc	L/defl	L/#
VERT(LL): 0.133	E	999	360
VERT(CL): 0.238	E	999	240
HORZ(LL): 0.044	K	-	-
HORZ(TL): 0.080	K	-	-

Creep Factor: 2.0
Max TC CSI: 0.668
Max BC CSI: 0.745
Max Web CSI: 0.549
Mfg Specified Camber:

VIEW Ver: 23.02.01A.1204.18

▲ Maximum Reactions (lbs)

Loc	Gravity R+	Gravity / R-	/ Rh	Non-Gravity / Rw	/ U	/ RL
Q	-	/-	/243	/-	/-	/238
C	1696	/-	/243	/1010	/627	/372
K	1396	/-	/-	/710	/895	/-

Wind reactions based on C&C
Q Brg Wid = 1.5 Min Req = -
C Brg Wid = 8.0 Min Req = 2.0 (Truss)
K Brg Wid = - Min Req = -
Bearing C is a rigid surface.

Maximum Top Chord Forces Per Ply (lbs)

Chords	Tens.	Comp.	Chords	Tens.	Comp.
A - B	282	- 191	F - G	530	- 1271
B - C	285	- 175	G - H	542	- 1184
C - D	1094	- 3264	H - I	558	- 1120
D - E	882	- 2981	I - J	0	0
E - F	753	- 2226			

Maximum Bot Chord Forces Per Ply (lbs)

Chords	Tens.	Comp.	Chords	Tens.	Comp.
C - O	2758	- 1098	M - L	654	- 409
O - N	2754	- 1101	L - K	654	- 409
N - M	2012	- 864			

Maximum Web Forces Per Ply (lbs)

Webs	Tens.	Comp.	Webs	Tens.	Comp.
A - P	216	- 239	F - M	393	- 1136
B - P	52	- 5	M - H	137	- 42
P - Q	220	- 243	M - I	1009	- 323
O - E	224	0	I - K	858	- 1371
E - N	260	- 794	J - K	174	- 135
N - F	449	- 51			

Lumber
Top chord: 2x4 SP #2;
Bot chord: 2x4 SP #2;
Webs: 2x4 SP #2;
Lt Slider: 2x4 SP #2; block length = 1.750'
Lt Level Return: 2x4 SP #2;

Bracing
(a) Continuous lateral restraint equally spaced on member.

Wind
Member design based on both MWFRS and C&C.
Right end vertical not exposed to wind pressure.
Wind loading based on both gable and hip roof types.

Additional Notes
The maximum horizontal reaction is 243#
***** BEARING ANALOG MODIFIED! *****

****WARNING**** READ AND FOLLOW ALL NOTES ON THIS DRAWING!
****IMPORTANT**** FURNISH THIS DRAWING TO ALL CONTRACTORS INCLUDING THE INSTALLERS
Trusses require extreme care in fabricating, handling, shipping, installing and bracing. Refer to and follow the latest edition of BCSI (Building Component Safety Information, by TPI and SBCA) for safety practices prior to performing these functions. Installers shall provide temporary bracing per BCSI. Unless noted otherwise, top chord shall have properly attached structural sheathing and bottom chord shall have a properly attached rigid ceiling. Locations shown for permanent lateral restraint of webs shall have continuous lateral restraint (CLR), installed with diagonal bracing installed on the CLR per BCSI sections B3, B7, or B10, as applicable. Apply plates to each face of truss and position as shown above and on the Joint Details, unless noted otherwise. Refer to drawings 160A-Z for standard plate positions. Refer to job's General Notes page for additional information.
Alpine, a division of ITW Building Components Group Inc. shall not be responsible for any deviation from this drawing, any failure to build the truss in conformance with ANSI/TPI 1, or for handling, shipping, installation and bracing of trusses. A seal on this drawing or cover page listing this drawing, indicates acceptance of professional engineering responsibility solely for the design shown. The suitability and use of this drawing for any structure is the responsibility of the Building Designer per ANSI/TPI 1 Sec.2.
For more information see these web sites: Alpine: alpineitw.com; TPI: tpinst.org; SBCA: sbcacomponents.com; ICC: iccsafe.org; AWC: awc.org

SEQN: 139297 / T90 / HIPM FROM:	Ply: 1 Qty: 1 Wgt: 149.8 lbs	**Job Number:** 24070306 7725 RES. **Truss Label:** 1MH19A	DRW: ... / ... 07/24/2024

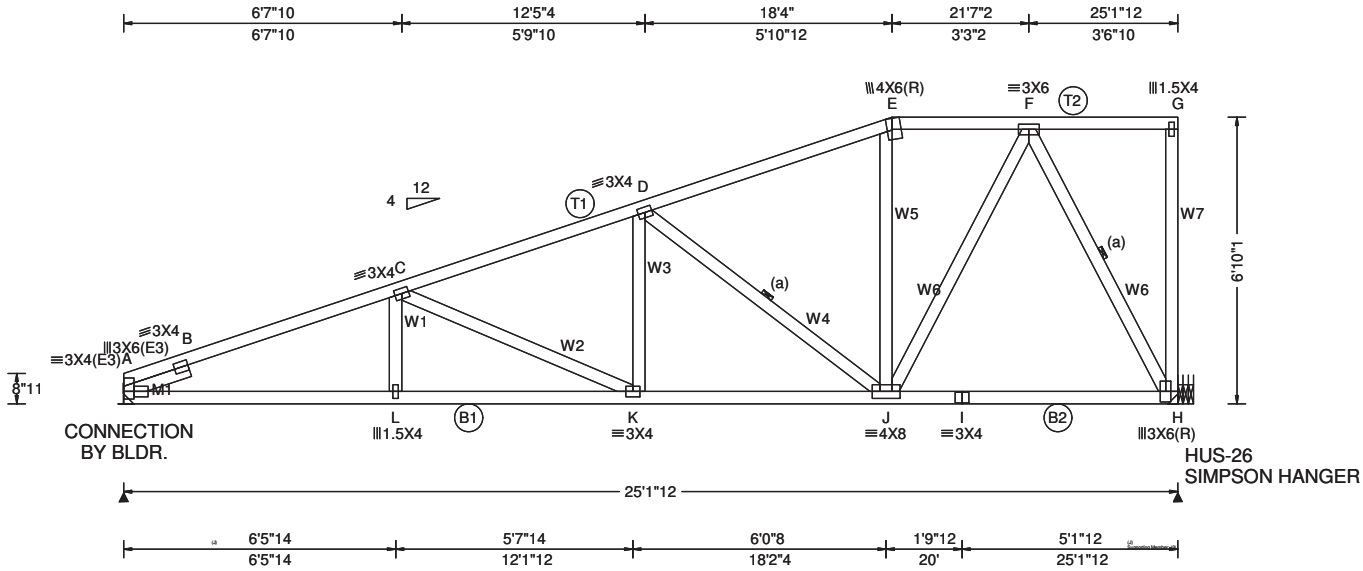

Loading Criteria (psf)

TCLL:	30.00
TCDL:	15.00
BCLL:	0.00
BCDL:	10.00
Des Ld:	55.00
NCBCLL:	10.00
Soffit:	2.00

Load Duration: 1.25
Spacing: 24.0 "

Wind Criteria
Wind Std: ASCE 7-22
Speed: 175 mph
Enclosure: Closed
Risk Category: II
EXP: C Kzt: NA
Mean Height: 15.78 ft
TCDL: 6.0 psf
BCDL: 6.0 psf
MWFRS Parallel Dist: h to 2h
C&C Dist a: 3.00 ft
Loc. from endwall: not in 9.00 ft
GCpi: 0.18
Wind Duration: 1.60

Snow Criteria (Pg,Pf in PSF)
Pg: NA Ct: NA CAT: NA
Pf: NA Ce: NA
Lu: NA Cs: NA
Snow Duration: NA

Building Code:
FBC 8th Ed. 2023 Res. HVHZ
TPI Std: 2014
Rep Fac: Yes
FT/RT:20(0)/10(0)
Plate Type(s):
WAVE

Defl/CSI Criteria

PP Deflection in	loc	L/defl	L/#
VERT(LL): 0.118	C	999	360
VERT(CL): 0.217	C	999	240
HORZ(LL): 0.041	H	-	-
HORZ(TL): 0.075	H	-	-

Creep Factor: 2.0
Max TC CSI: 0.703
Max BC CSI: 0.748
Max Web CSI: 0.515
Mfg Specified Camber:

VIEW Ver: 23.02.01A.1204.18

▲ Maximum Reactions (lbs)

Loc	Gravity R+	/ R-	/ Rh	Non-Gravity / Rw	/ U	/ RL
A	1383	/-	/-	/761	/436	/350
H	1383	/-	/-	/705	/926	/-

Wind reactions based on C&C
A Brg Wid = - Min Req = -
H Brg Wid = - Min Req = -

Maximum Top Chord Forces Per Ply (lbs)

Chords	Tens.	Comp.	Chords	Tens.	Comp.
A - B	940	- 2997	D - E	564	- 1256
B - C	927	- 2898	E - F	582	- 1106
C - D	787	- 2186	F - G	0	0

Maximum Bot Chord Forces Per Ply (lbs)

Chords	Tens.	Comp.	Chords	Tens.	Comp.
A - L	2676	- 1153	J - I	647	- 424
L - K	2671	- 1156	I - H	647	- 424
K - J	1974	- 902			

Maximum Web Forces Per Ply (lbs)

Webs	Tens.	Comp.	Webs	Tens.	Comp.
L - C	217	0	J - E	141	- 46
C - K	277	- 746	J - F	994	- 342
K - D	426	- 56	F - H	888	- 1357
D - J	412	- 1106	G - H	178	- 134

Lumber

Top chord: 2x4 SP #2;
Bot chord: 2x4 SP #2;
Webs: 2x4 SP #2;
Lt Slider: 2x4 SP #2; block length = 1.654'

Bracing

(a) Continuous lateral restraint equally spaced on member.

Hangers / Ties

(J) Hanger Support Required, by others

Wind

Member design based on both MWFRS and C&C.

Right end vertical not exposed to wind pressure.

Wind loading based on both gable and hip roof types.

****WARNING**** READ AND FOLLOW ALL NOTES ON THIS DRAWING!
****IMPORTANT**** FURNISH THIS DRAWING TO ALL CONTRACTORS INCLUDING THE INSTALLERS
Trusses require extreme care in fabricating, handling, shipping, installing and bracing. Refer to and follow the latest edition of BCSI (Building Component Safety Information, by TPI and SBCA) for safety practices prior to performing these functions. Installers shall provide temporary bracing per BCSI. Unless noted otherwise, top chord shall have properly attached structural sheathing and bottom chord shall have a properly attached rigid ceiling. Locations shown for permanent lateral restraint of webs shall have continuous lateral restraint (CLR), installed with diagonal bracing installed on the CLR per BCSI sections B3, B7, or B10, as applicable. Apply plates to each face of truss and position as shown above and on the Joint Details, unless noted otherwise. Refer to drawings 160A-Z for standard plate positions. Refer to job's General Notes page for additional information.
Alpine, a division of ITW Building Components Group Inc. shall not be responsible for any deviation from this drawing, any failure to build the truss in conformance with ANSI/TPI 1, or for handling, shipping, installation and bracing of trusses. A seal on this drawing or cover page listing this drawing, indicates acceptance of professional engineering responsibility solely for the design shown. The suitability and use of this drawing for any structure is the responsibility of the Building Designer per ANSI/TPI 1 Sec.2.
For more information see these web sites: Alpine: alpineitw.com; TPI: tpinst.org; SBCA: sbcacomponents.com; ICC: iccsafe.org; AWC: awc.org

SEQN: 206508 / T79 / HIPM FROM:	Ply: 1 Qty: 1 Wgt: 107.8 lbs	**Job Number:** 24070306 7725 RES. **Truss Label:** 1MH18	DRW: ... / ... 07/24/2024

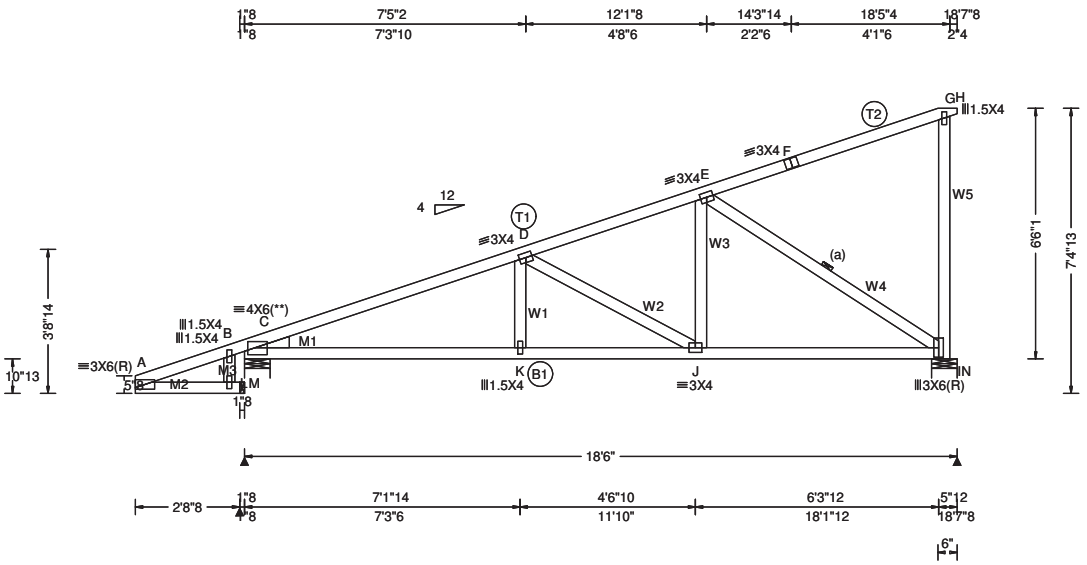

Loading Criteria (psf)

TCLL:	30.00
TCDL:	15.00
BCLL:	0.00
BCDL:	10.00
Des Ld:	55.00
NCBCLL:	10.00
Soffit:	2.00

Load Duration: 1.25
Spacing: 24.0 "

Wind Criteria
Wind Std: ASCE 7-22
Speed: 175 mph
Enclosure: Closed
Risk Category: II
EXP: C Kzt: NA
Mean Height: 15.03 ft
TCDL: 6.0 psf
BCDL: 6.0 psf
MWFRS Parallel Dist: h to 2h
C&C Dist a: 3.00 ft
Loc. from endwall: not in 9.00 ft
GCpi: 0.18
Wind Duration: 1.60

Snow Criteria (Pg,Pf in PSF)
Pg: NA Ct: NA CAT: NA
Pf: NA Ce: NA
Lu: NA Cs: NA
Snow Duration: NA

Building Code:
FBC 8th Ed. 2023 Res. HVHZ
TPI Std: 2014
Rep Fac: Yes
FT/RT:20(0)/10(0)
Plate Type(s):
WAVE

Defl/CSI Criteria

PP Deflection in	loc	L/defl	L/#
VERT(LL): 0.065	K	999	360
VERT(CL): 0.115	K	999	240
HORZ(LL): 0.022	I	-	-
HORZ(TL): 0.040	I	-	-

Creep Factor: 2.0
Max TC CSI: 0.798
Max BC CSI: 0.540
Max Web CSI: 0.351
Mfg Specified Camber:

VIEW Ver: 23.02.01A.1204.18

▲ Maximum Reactions (lbs)

Loc	Gravity R+	/ R-	/ Rh	Non-Gravity / Rw	/ U	/ RL
M	-	/-	/243	/-	/-	/287
B	1275	/-	/243	/836	/671	/423
N	958	/-	/-	/646	/533	/-

Wind reactions based on C&C
M Brg Wid = 1.5 Min Req = -
B Brg Wid = 8.0 Min Req = 1.5 (Truss)
N Brg Wid = 8.0 Min Req = 1.5 (Support)
Bearings B & I are a rigid surface.

Maximum Top Chord Forces Per Ply (lbs)

Chords	Tens.	Comp.	Chords	Tens.	Comp.
A - B	283	- 252	E - F	11	- 106
B - C	310	- 254	F - G	66	- 69
C - D	645	- 1894	G - H	0	0
D - E	408	- 1208			

Maximum Bot Chord Forces Per Ply (lbs)

Chords	Tens.	Comp.	Chords	Tens.	Comp.
C - K	1713	- 955	J - I	1061	- 592
K - J	1709	- 957			

Maximum Web Forces Per Ply (lbs)

Webs	Tens.	Comp.	Webs	Tens.	Comp.
A - L	282	- 243	D - J	414	- 718
B - L	53	- 12	J - E	492	- 129
L - M	287	- 243	E - I	709	- 1271
K - D	197	0	G - I	171	- 209

Lumber
Top chord: 2x4 SP #2;
Bot chord: 2x4 SP #2;
Webs: 2x4 SP #2;
Lt Wedge: 2x4 SP #2;Lt Level Return: 2x4 SP #2;

Bracing
(a) Continuous lateral restraint equally spaced on member.

Plating Notes
(**) 1 plate(s) require special positioning. Refer to scaled plate plot details for special positioning requirements.

Wind
Member design based on both MWFRS and C&C.
Right end vertical not exposed to wind pressure.
Wind loading based on both gable and hip roof types.

Additional Notes
The maximum horizontal reaction is 243#
***** BEARING ANALOG MODIFIED! *****

****WARNING**** READ AND FOLLOW ALL NOTES ON THIS DRAWING!
****IMPORTANT**** FURNISH THIS DRAWING TO ALL CONTRACTORS INCLUDING THE INSTALLERS
Trusses require extreme care in fabricating, handling, shipping, installing and bracing. Refer to and follow the latest edition of BCSI (Building Component Safety Information, by TPI and SBCA) for safety practices prior to performing these functions. Installers shall provide temporary bracing per BCSI. Unless noted otherwise, top chord shall have properly attached structural sheathing and bottom chord shall have a properly attached rigid ceiling. Locations shown for permanent lateral restraint of webs shall have continuous lateral restraint (CLR), installed with diagonal bracing installed on the CLR per BCSI sections B3, B7, or B10, as applicable. Apply plates to each face of truss and position as shown above and on the Joint Details, unless noted otherwise. Refer to drawings 160A-Z for standard plate positions. Refer to job's General Notes page for additional information.
Alpine, a division of ITW Building Components Group Inc. shall not be responsible for any deviation from this drawing, any failure to build the truss in conformance with ANSI/TPI 1, or for handling, shipping, installation and bracing of trusses. A seal on this drawing or cover page listing this drawing, indicates acceptance of professional engineering responsibility solely for the design shown. The suitability and use of this drawing for any structure is the responsibility of the Building Designer per ANSI/TPI 1 Sec.2.
For more information see these web sites: Alpine: alpineitw.com; TPI: tpinst.org; SBCA: sbcacomponents.com; ICC: iccsafe.org; AWC: awc.org

SEQN: 139294 / T108 / HIPM FROM:	Ply: 1 Qty: 1 Wgt: 191.8 lbs	**Job Number:** 24070306 7725 RES. **Truss Label:** 1MH17	DRW: ... / ... 07/24/2024

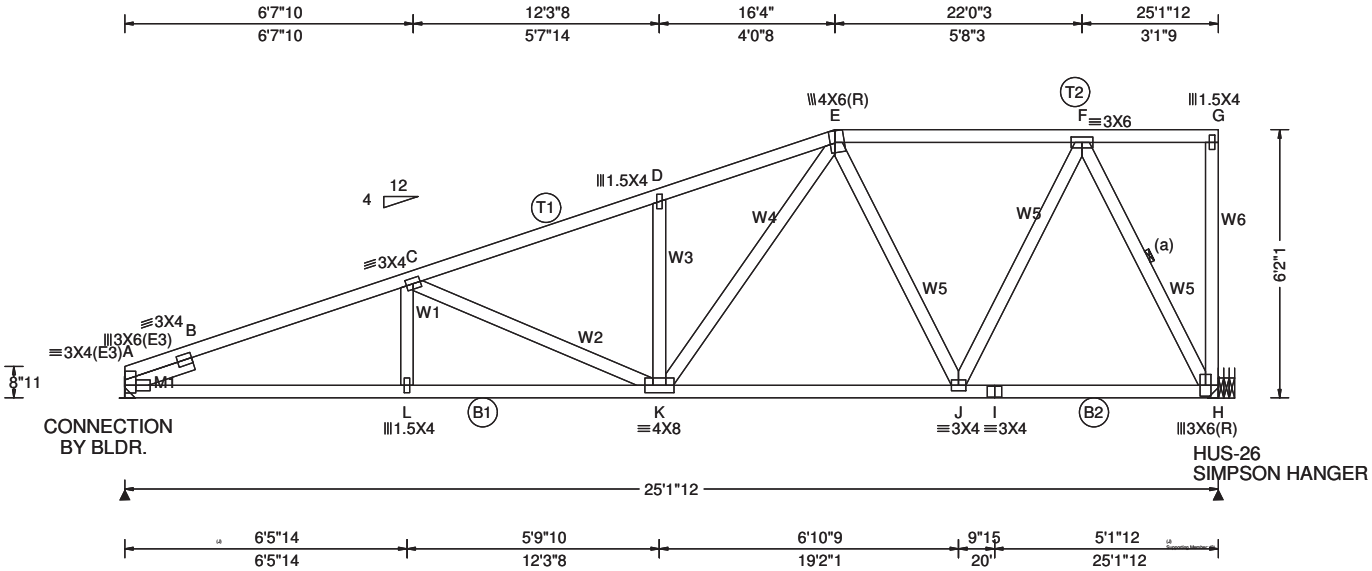

Loading Criteria (psf)

TCLL:	30.00
TCDL:	15.00
BCLL:	0.00
BCDL:	10.00
Des Ld:	55.00
NCBCLL:	10.00
Soffit:	2.00

Load Duration: 1.25
Spacing: 24.0 "

Wind Criteria
Wind Std: ASCE 7-22
Speed: 175 mph
Enclosure: Closed
Risk Category: II
EXP: C Kzt: NA
Mean Height: 15.45 ft
TCDL: 6.0 psf
BCDL: 6.0 psf
MWFRS Parallel Dist: h to 2h
C&C Dist a: 3.00 ft
Loc. from endwall: not in 9.00 ft
GCpi: 0.18
Wind Duration: 1.60

Snow Criteria (Pg,Pf in PSF)
Pg: NA Ct: NA CAT: NA
Pf: NA Ce: NA
Lu: NA Cs: NA
Snow Duration: NA

Building Code:
FBC 8th Ed. 2023 Res. HVHZ
TPI Std: 2014
Rep Fac: Yes
FT/RT:20(0)/10(0)
Plate Type(s):
WAVE

Defl/CSI Criteria

PP Deflection in	loc	L/defl	L/#
VERT(LL): 0.120	C	999	360
VERT(CL): 0.219	C	999	240
HORZ(LL): 0.039	H	-	-
HORZ(TL): 0.071	H	-	-

Creep Factor: 2.0
Max TC CSI: 0.751
Max BC CSI: 0.748
Max Web CSI: 0.541
Mfg Specified Camber:

VIEW Ver: 23.02.01A.1204.18

▲ Maximum Reactions (lbs)

Loc	Gravity R+	Gravity / R-	/ Rh	Non-Gravity / Rw	/ U	/ RL
A	1383	/-	/-	/723	/491	/311
H	1383	/-	/-	/695	/1020	/-

Wind reactions based on C&C
A Brg Wid = - Min Req = -
H Brg Wid = - Min Req = -

Maximum Top Chord Forces Per Ply (lbs)

Chords	Tens.	Comp.	Chords	Tens.	Comp.
A - B	1069	- 2994	D - E	1012	- 2134
B - C	1080	- 2902	E - F	646	- 1056
C - D	934	- 2165	F - G	0	0

Maximum Bot Chord Forces Per Ply (lbs)

Chords	Tens.	Comp.	Chords	Tens.	Comp.
A - L	2681	- 1257	J - I	673	- 506
L - K	2677	- 1260	I - H	673	- 506
K - J	1367	- 828			

Maximum Web Forces Per Ply (lbs)

Webs	Tens.	Comp.	Webs	Tens.	Comp.
L - C	210	0	E - J	419	- 716
C - K	284	- 775	J - F	878	- 321
D - K	204	- 423	F - H	1077	- 1432
K - E	1061	- 303	G - H	96	- 73

Lumber
Top chord: 2x4 SP #2;
Bot chord: 2x4 SP #2;
Webs: 2x4 SP #2;
Lt Slider: 2x4 SP #2; block length = 1.654'

Bracing
(a) Continuous lateral restraint equally spaced on member.

Hangers / Ties
(J) Hanger Support Required, by others

Wind
Member design based on both MWFRS and C&C.
Right end vertical not exposed to wind pressure.
Wind loading based on both gable and hip roof types.

****WARNING**** READ AND FOLLOW ALL NOTES ON THIS DRAWING!
****IMPORTANT**** FURNISH THIS DRAWING TO ALL CONTRACTORS INCLUDING THE INSTALLERS

Trusses require extreme care in fabricating, handling, shipping, installing and bracing. Refer to and follow the latest edition of BCSI (Building Component Safety Information, by TPI and SBCA) for safety practices prior to performing these functions. Installers shall provide temporary bracing per BCSI. Unless noted otherwise, top chord shall have properly attached structural sheathing and bottom chord shall have a properly attached rigid ceiling. Locations shown for permanent lateral restraint of webs shall have continuous lateral restraint (CLR), installed with diagonal bracing installed on the CLR per BCSI sections B3, B7, or B10, as applicable. Apply plates to each face of truss and position as shown above and on the Joint Details, unless noted otherwise. Refer to drawings 160A-Z for standard plate positions. Refer to job's General Notes page for additional information.

Alpine, a division of ITW Building Components Group Inc. shall not be responsible for any deviation from this drawing, any failure to build the truss in conformance with ANSI/TPI 1, or for handling, shipping, installation and bracing of trusses. A seal on this drawing or cover page listing this drawing, indicates acceptance of professional engineering responsibility solely for the design shown. The suitability and use of this drawing for any structure is the responsibility of the Building Designer per ANSI/TPI 1 Sec.2.

For more information see these web sites: Alpine: alpineitw.com; TPI: tpinst.org; SBCA: sbcacomponents.com; ICC: iccsafe.org; AWC: awc.org

SEQN: 139381 / T140 / HIPM FROM:	Ply: 1 Qty: 1 Wgt: 191.8 lbs	**Job Number:** 24070306 7725 RES. **Truss Label:** 1MH17P	DRW: ... / ... 07/24/2024

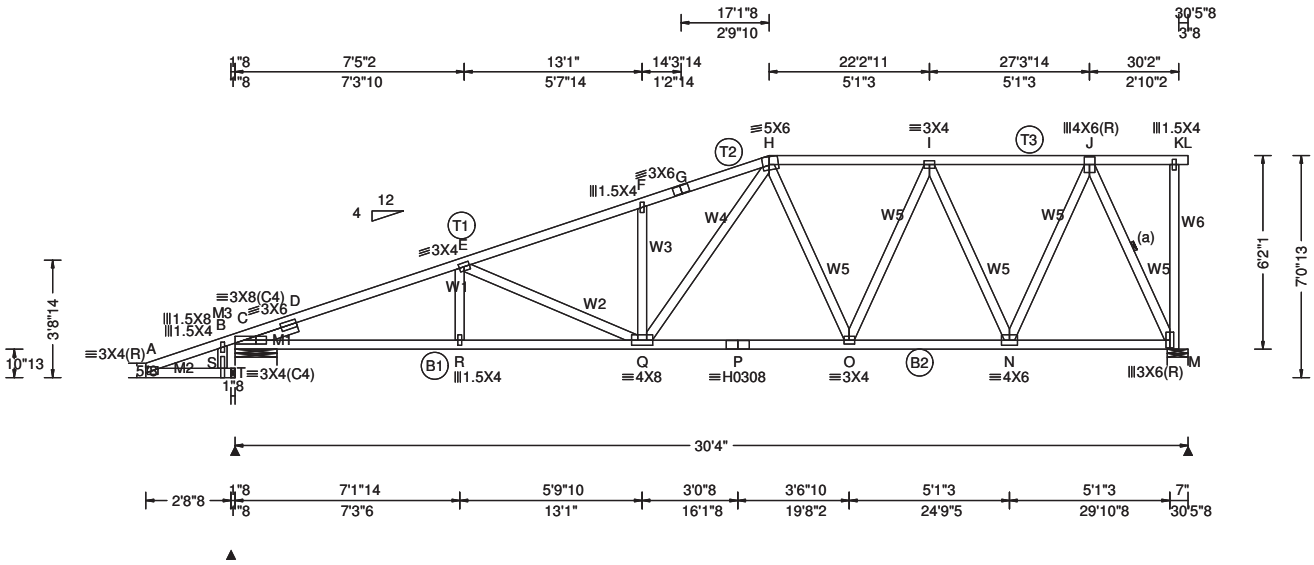

Loading Criteria (psf)

TCLL:	30.00
TCDL:	15.00
BCLL:	0.00
BCDL:	10.00
Des Ld:	55.00
NCBCLL:	10.00
Soffit:	2.00

Load Duration: 1.25
Spacing: 24.0 "

Wind Criteria
Wind Std: ASCE 7-22
Speed: 175 mph
Enclosure: Part. Enc.
Risk Category: II
EXP: C Kzt: NA
Mean Height: 15.00 ft
TCDL: 6.0 psf
BCDL: 6.0 psf
MWFRS Parallel Dist: h to 2h
C&C Dist a: 3.03 ft
Loc. from endwall: not in 9.00 ft
GCpi: 0.55
Wind Duration: 1.60

Snow Criteria (Pg,Pf in PSF)
Pg: NA Ct: NA CAT: NA
Pf: NA Ce: NA
Lu: NA Cs: NA
Snow Duration: NA

Building Code:
FBC 8th Ed. 2023 Res. HVHZ
TPI Std: 2014
Rep Fac: Yes
FT/RT:20(0)/10(0)
Plate Type(s):
WAVE, HS

Defl/CSI Criteria

PP Deflection in	loc	L/defl	L/#
VERT(LL): 0.217	Q	999	360
VERT(CL): 0.327	F	999	240
HORZ(LL): -0.112	D	-	-
HORZ(TL): 0.133	D	-	-

Creep Factor: 2.0
Max TC CSI: 0.799
Max BC CSI: 0.829
Max Web CSI: 0.851
Mfg Specified Camber:

VIEW Ver: 23.02.01A.1204.18

▲ Maximum Reactions (lbs)

Loc	Gravity R+	/ R-	/ Rh	Non-Gravity / Rw	/ U	/ RL
T	-	/-	/175	/-	/-	/476
C	1938	/-	/-	/1905	/1416	/-
M	1639	/-	/176	/1319	/1814	/665

Wind reactions based on C&C
T Brg Wid = 1.5 Min Req = -
C Brg Wid = 16.0 Min Req = 2.3 (Truss)
M Brg Wid = 8.0 Min Req = 1.5 (Support)
Bearings C & M are a rigid surface.

Maximum Top Chord Forces Per Ply (lbs)

Chords	Tens.	Comp.	Chords	Tens.	Comp.
A - B	490	- 423	G - H	2415	- 2788
B - C	516	- 436	H - I	1840	- 1846
C - D	3419	- 4248	I - J	1267	- 1201
D - E	2581	- 3487	J - K	0	0
E - F	2302	- 2846	K - L	0	0
F - G	2404	- 2825			

Maximum Bot Chord Forces Per Ply (lbs)

Chords	Tens.	Comp.	Chords	Tens.	Comp.
C - R	6485	- 4662	P - O	2186	- 1948
R - Q	3242	- 2332	O - N	1893	- 1870
Q - P	2186	- 1948	N - M	1172	- 1130

Maximum Web Forces Per Ply (lbs)

Webs	Tens.	Comp.	Webs	Tens.	Comp.
A - S	442	- 485	H - O	271	- 419
B - S	194	- 151	O - I	694	- 424
S - T	439	- 476	I - N	1131	- 1078
R - E	496	- 373	N - J	1228	- 1182
E - Q	432	- 662	J - M	1833	- 1660
F - Q	318	- 459	K - M	158	- 105
Q - H	1070	- 687			

Lumber
Top chord: 2x4 SP #2;
Bot chord: 2x4 SP #1; B2 2x4 SP #2;
Webs: 2x4 SP #2;
Lt Slider: 2x4 SP #2; block length = 1.750'
Lt Level Return: 2x4 SP #2;

Bracing
(a) Continuous lateral restraint equally spaced on member.

Wind
Member design based on both MWFRS and C&C.
Right end vertical not exposed to wind pressure.
Wind loading based on both gable and hip roof types.
Left bottom chord exposed to wind.

Additional Notes
***** BEARING ANALOG MODIFIED! *****

****WARNING**** READ AND FOLLOW ALL NOTES ON THIS DRAWING!
****IMPORTANT**** FURNISH THIS DRAWING TO ALL CONTRACTORS INCLUDING THE INSTALLERS

Trusses require extreme care in fabricating, handling, shipping, installing and bracing. Refer to and follow the latest edition of BCSI (Building Component Safety Information, by TPI and SBCA) for safety practices prior to performing these functions. Installers shall provide temporary bracing per BCSI. Unless noted otherwise, top chord shall have properly attached structural sheathing and bottom chord shall have a properly attached rigid ceiling. Locations shown for permanent lateral restraint of webs shall have continuous lateral restraint (CLR), installed with diagonal bracing installed on the CLR per BCSI sections B3, B7, or B10, as applicable. Apply plates to each face of truss and position as shown above and on the Joint Details, unless noted otherwise. Refer to drawings 160A-Z for standard plate positions. Refer to job's General Notes page for additional information.
Alpine, a division of ITW Building Components Group Inc. shall not be responsible for any deviation from this drawing, any failure to build the truss in conformance with ANSI/TPI 1, or for handling, shipping, installation and bracing of trusses. A seal on this drawing or cover page listing this drawing, indicates acceptance of professional engineering responsibility solely for the design shown. The suitability and use of this drawing for any structure is the responsibility of the Building Designer per ANSI/TPI 1 Sec.2.
For more information see these web sites: Alpine: alpineitw.com; TPI: tpinst.org; SBCA: sbcacomponents.com; ICC: iccsafe.org; AWC: awc.org

SEQN: 206511 / T78 / HIPM FROM:	Ply: 1 Qty: 1 Wgt: 114.8 lbs	**Job Number:** 24070306 7725 RES. **Truss Label:** 1MH16	DRW: ... / ... 07/24/2024

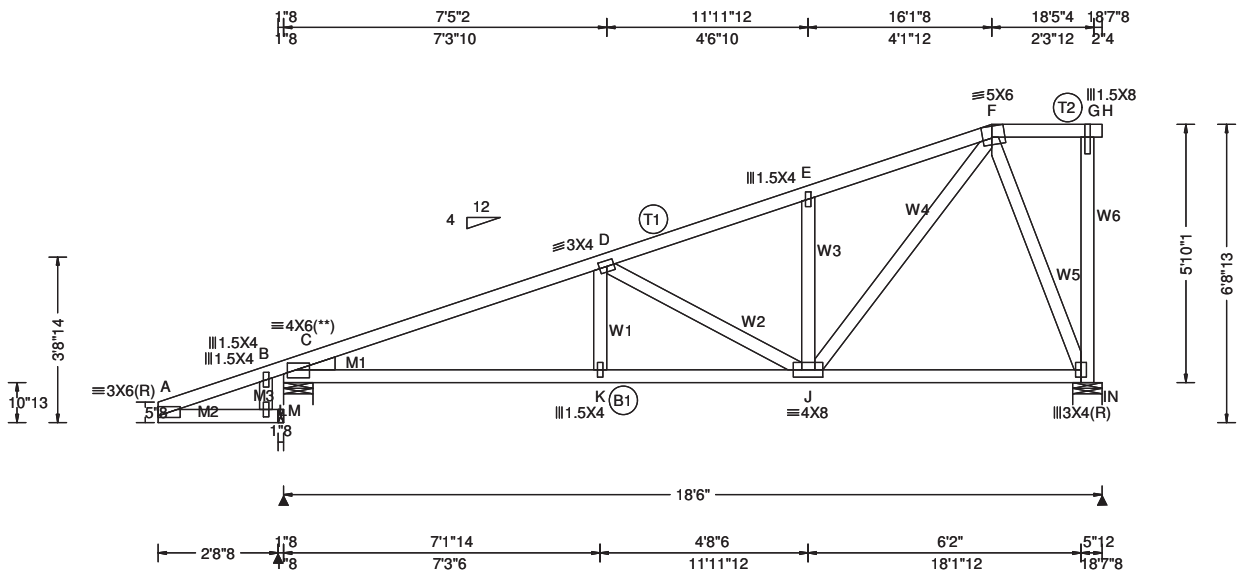

Loading Criteria (psf)

TCLL:	30.00
TCDL:	15.00
BCLL:	0.00
BCDL:	10.00
Des Ld:	55.00
NCBCLL:	10.00
Soffit:	2.00

Load Duration: 1.25
Spacing: 24.0 "

Wind Criteria
Wind Std: ASCE 7-22
Speed: 175 mph
Enclosure: Closed
Risk Category: II
EXP: C Kzt: NA
Mean Height: 15.00 ft
TCDL: 6.0 psf
BCDL: 6.0 psf
MWFRS Parallel Dist: h to 2h
C&C Dist a: 3.00 ft
Loc. from endwall: not in 9.00 ft
GCpi: 0.18
Wind Duration: 1.60

Snow Criteria (Pg,Pf in PSF)
Pg: NA Ct: NA CAT: NA
Pf: NA Ce: NA
Lu: NA Cs: NA
Snow Duration: NA

Building Code:
FBC 8th Ed. 2023 Res. HVHZ
TPI Std: 2014
Rep Fac: Yes
FT/RT:20(0)/10(0)
Plate Type(s):
WAVE

Defl/CSI Criteria

PP Deflection in	loc	L/defl	L/#
VERT(LL): 0.067	K	999	360
VERT(CL): 0.117	K	999	240
HORZ(LL): 0.018	I	-	-
HORZ(TL): 0.033	I	-	-

Creep Factor: 2.0
Max TC CSI: 0.589
Max BC CSI: 0.535
Max Web CSI: 0.554
Mfg Specified Camber:

VIEW Ver: 23.02.01A.1204.18

▲ Maximum Reactions (lbs)

Loc	Gravity R+	Gravity / R-	Gravity / Rh	Non-Gravity / Rw	Non-Gravity / U	Non-Gravity / RL
M	-	/-	/246	/-	/-	/288
B	1275	/-	/246	/818	/680	/356
N	1003	/-	/-	/521	/717	/-

Wind reactions based on C&C
M Brg Wid = 1.5 Min Req = -
B Brg Wid = 8.0 Min Req = 1.5 (Truss)
N Brg Wid = 8.0 Min Req = 1.5 (Support)
Bearings B & I are a rigid surface.

Maximum Top Chord Forces Per Ply (lbs)

Chords	Tens.	Comp.	Chords	Tens.	Comp.
A - B	285	- 252	E - F	568	- 1164
B - C	312	- 255	F - G	0	0
C - D	712	- 1906	G - H	0	0
D - E	454	- 1169			

Maximum Bot Chord Forces Per Ply (lbs)

Chords	Tens.	Comp.	Chords	Tens.	Comp.
C - K	1726	- 962	J - I	348	- 231
K - J	1722	- 964			

Maximum Web Forces Per Ply (lbs)

Webs	Tens.	Comp.	Webs	Tens.	Comp.
A - L	283	- 246	E - J	322	- 408
B - L	53	- 12	J - F	1151	- 576
L - M	288	- 246	F - I	600	- 903
K - D	202	0	G - I	192	- 121
D - J	443	- 783			

Lumber
Top chord: 2x4 SP #2;
Bot chord: 2x4 SP #2;
Webs: 2x4 SP #2;
Lt Wedge: 2x4 SP #2;Lt Level Return: 2x4 SP #2;

Plating Notes
(**) 1 plate(s) require special positioning. Refer to scaled plate plot details for special positioning requirements.

Wind
Member design based on both MWFRS and C&C.
Right end vertical not exposed to wind pressure.
Wind loading based on both gable and hip roof types.

Additional Notes
The maximum horizontal reaction is 246#
***** BEARING ANALOG MODIFIED! *****

****WARNING**** READ AND FOLLOW ALL NOTES ON THIS DRAWING!
****IMPORTANT**** FURNISH THIS DRAWING TO ALL CONTRACTORS INCLUDING THE INSTALLERS
Trusses require extreme care in fabricating, handling, shipping, installing and bracing. Refer to and follow the latest edition of BCSI (Building Component Safety Information, by TPI and SBCA) for safety practices prior to performing these functions. Installers shall provide temporary bracing per BCSI. Unless noted otherwise, top chord shall have properly attached structural sheathing and bottom chord shall have a properly attached rigid ceiling. Locations shown for permanent lateral restraint of webs shall have continuous lateral restraint (CLR), installed with diagonal bracing installed on the CLR per BCSI sections B3, B7, or B10, as applicable. Apply plates to each face of truss and position as shown above and on the Joint Details, unless noted otherwise. Refer to drawings 160A-Z for standard plate positions. Refer to job's General Notes page for additional information.
Alpine, a division of ITW Building Components Group Inc. shall not be responsible for any deviation from this drawing, any failure to build the truss in conformance with ANSI/TPI 1, or for handling, shipping, installation and bracing of trusses. A seal on this drawing or cover page listing this drawing, indicates acceptance of professional engineering responsibility solely for the design shown. The suitability and use of this drawing for any structure is the responsibility of the Building Designer per ANSI/TPI 1 Sec.2.
For more information see these web sites: Alpine: alpineitw.com; TPI: tpinst.org; SBCA: sbcacomponents.com; ICC: iccsafe.org; AWC: awc.org

SEQN: 138824 / T104 / HIPM FROM:	Ply: 1 Qty: 1 Wgt: 155.4 lbs	**Job Number:** 24070306 7725 RES. **Truss Label:** 1MH15	DRW: ... / ... 07/24/2024

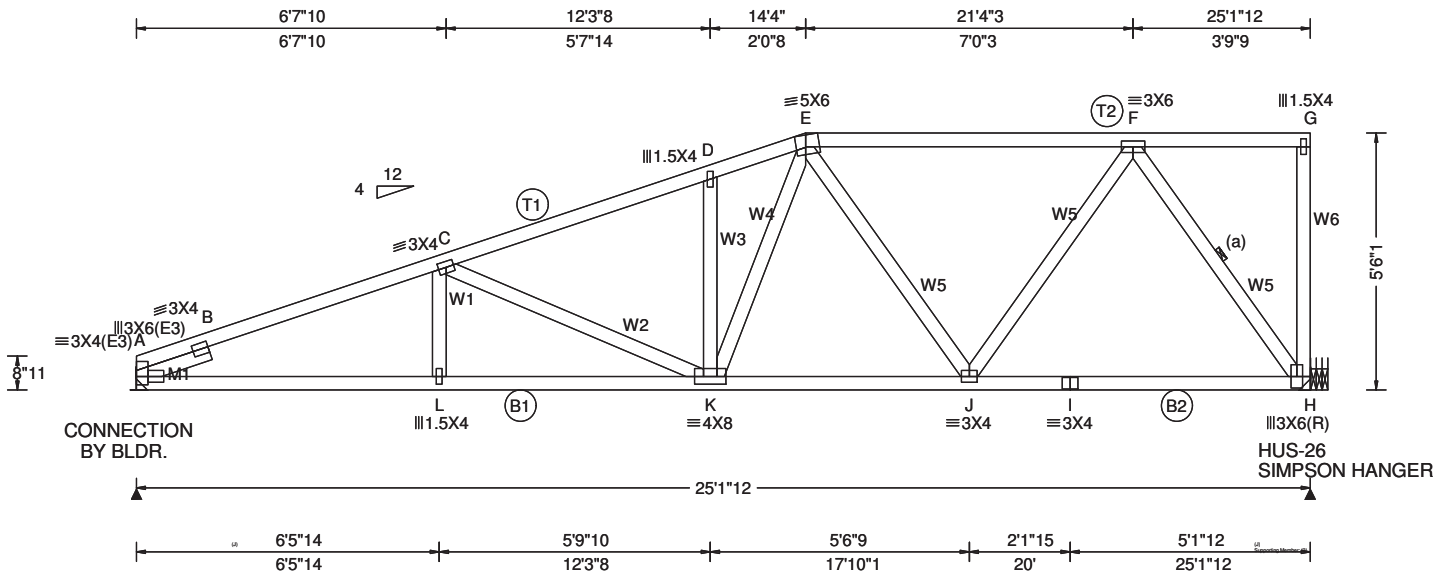

Loading Criteria (psf)

TCLL:	30.00
TCDL:	15.00
BCLL:	0.00
BCDL:	10.00
Des Ld:	55.00
NCBCLL:	10.00
Soffit:	2.00

Load Duration: 1.25
Spacing: 24.0 "

Wind Criteria
Wind Std: ASCE 7-22
Speed: 175 mph
Enclosure: Closed
Risk Category: II
EXP: C Kzt: NA
Mean Height: 15.12 ft
TCDL: 6.0 psf
BCDL: 6.0 psf
MWFRS Parallel Dist: h to 2h
C&C Dist a: 3.00 ft
Loc. from endwall: not in 9.00 ft
GCpi: 0.18
Wind Duration: 1.60

Snow Criteria (Pg,Pf in PSF)
Pg: NA Ct: NA CAT: NA
Pf: NA Ce: NA
Lu: NA Cs: NA
Snow Duration: NA

Building Code:
FBC 8th Ed. 2023 Res. HVHZ
TPI Std: 2014
Rep Fac: Yes
FT/RT:20(0)/10(0)
Plate Type(s):
WAVE

Defl/CSI Criteria

PP Deflection in	loc	L/defl	L/#
VERT(LL): 0.118	C	999	360
VERT(CL): 0.217	C	999	240
HORZ(LL): 0.041	H	-	-
HORZ(TL): 0.075	H	-	-

Creep Factor: 2.0
Max TC CSI: 0.892
Max BC CSI: 0.742
Max Web CSI: 0.548
Mfg Specified Camber:

VIEW Ver: 23.02.01A.1204.18

▲ Maximum Reactions (lbs)

Loc	Gravity R+	/ R-	/ Rh	Non-Gravity / Rw	/ U	/ RL
A	1383	/-	/-	/720	/556	/271
H	1383	/-	/-	/685	/1087	/-

Wind reactions based on C&C
A Brg Wid = - Min Req = -
H Brg Wid = - Min Req = -

Maximum Top Chord Forces Per Ply (lbs)

Chords	Tens.	Comp.	Chords	Tens.	Comp.
A - B	1243	- 2991	D - E	1149	- 2079
B - C	1253	- 2906	E - F	891	- 1342
C - D	1126	- 2155	F - G	0	0

Maximum Bot Chord Forces Per Ply (lbs)

Chords	Tens.	Comp.	Chords	Tens.	Comp.
A - L	2685	- 1381	J - I	903	- 741
L - K	2681	- 1384	I - H	903	- 741
K - J	1679	- 1104			

Maximum Web Forces Per Ply (lbs)

Webs	Tens.	Comp.	Webs	Tens.	Comp.
L - C	223	0	E - J	381	- 604
C - K	265	- 792	J - F	787	- 269
D - K	146	- 351	F - H	1258	- 1533
K - E	764	- 194	G - H	115	- 84

Lumber
Top chord: 2x4 SP #2;
Bot chord: 2x4 SP #2;
Webs: 2x4 SP #2;
Lt Slider: 2x4 SP #2; block length = 1.654'

Bracing
(a) Continuous lateral restraint equally spaced on member.

Hangers / Ties
(J) Hanger Support Required, by others

Wind
Member design based on both MWFRS and C&C.
Right end vertical not exposed to wind pressure.
Wind loading based on both gable and hip roof types.

****WARNING**** READ AND FOLLOW ALL NOTES ON THIS DRAWING!
****IMPORTANT**** FURNISH THIS DRAWING TO ALL CONTRACTORS INCLUDING THE INSTALLERS

Trusses require extreme care in fabricating, handling, shipping, installing and bracing. Refer to and follow the latest edition of BCSI (Building Component Safety Information, by TPI and SBCA) for safety practices prior to performing these functions. Installers shall provide temporary bracing per BCSI. Unless noted otherwise, top chord shall have properly attached structural sheathing and bottom chord shall have a properly attached rigid ceiling. Locations shown for permanent lateral restraint of webs shall have continuous lateral restraint (CLR), installed with diagonal bracing installed on the CLR per BCSI sections B3, B7, or B10, as applicable. Apply plates to each face of truss and position as shown above and on the Joint Details, unless noted otherwise. Refer to drawings 160A-Z for standard plate positions. Refer to job's General Notes page for additional information.
Alpine, a division of ITW Building Components Group Inc. shall not be responsible for any deviation from this drawing, any failure to build the truss in conformance with ANSI/TPI 1, or for handling, shipping, installation and bracing of trusses. A seal on this drawing or cover page listing this drawing, indicates acceptance of professional engineering responsibility solely for the design shown. The suitability and use of this drawing for any structure is the responsibility of the Building Designer per ANSI/TPI 1 Sec.2.
For more information see these web sites: Alpine: alpineitw.com; TPI: tpinst.org; SBCA: sbcacomponents.com; ICC: iccsafe.org; AWC: awc.org

SEQN: 139375 / T49 / HIPM FROM:	Ply: 1 Qty: 1 Wgt: 180.6 lbs	**Job Number:** 24070306 7725 RES. **Truss Label:** 1MH15P	DRW: ... / ... 07/24/2024

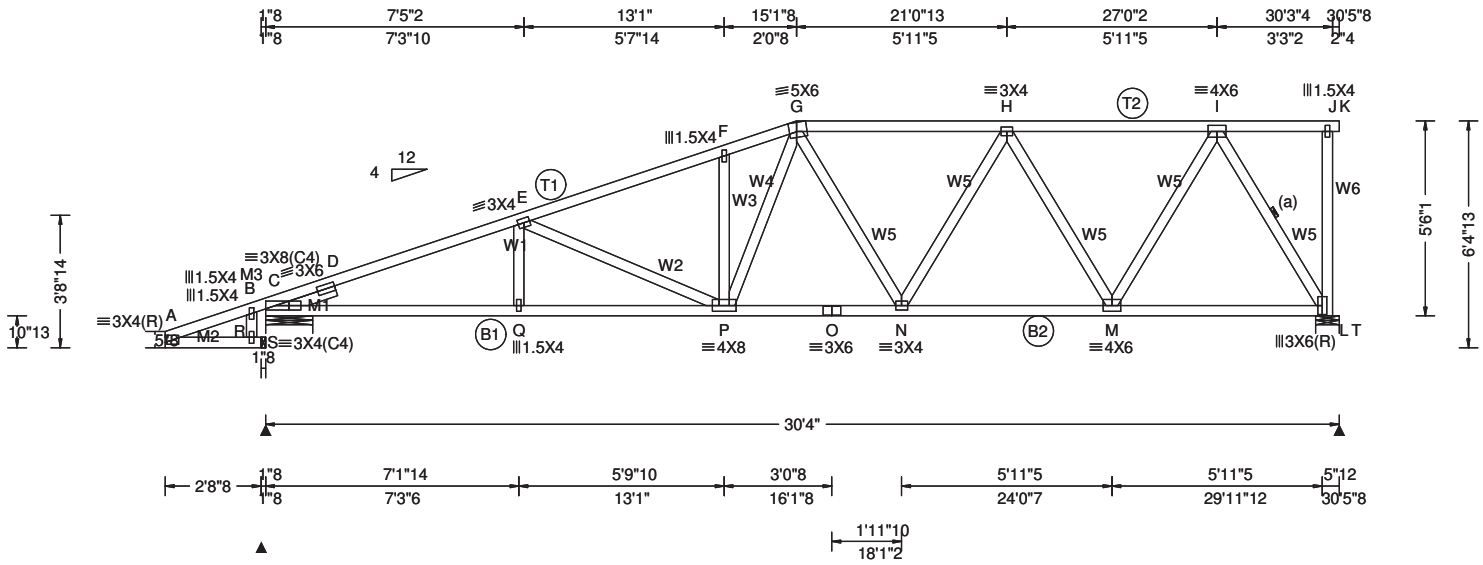

Loading Criteria (psf)

TCLL:	30.00
TCDL:	15.00
BCLL:	0.00
BCDL:	10.00
Des Ld:	55.00
NCBCLL:	10.00
Soffit:	2.00

Load Duration: 1.25
Spacing: 24.0 "

Wind Criteria
Wind Std: ASCE 7-22
Speed: 175 mph
Enclosure: Part. Enc.
Risk Category: II
EXP: C Kzt: NA
Mean Height: 15.00 ft
TCDL: 6.0 psf
BCDL: 6.0 psf
MWFRS Parallel Dist: h to 2h
C&C Dist a: 3.03 ft
Loc. from endwall: not in 9.00 ft
GCpi: 0.55
Wind Duration: 1.60

Snow Criteria (Pg,Pf in PSF)
Pg: NA Ct: NA CAT: NA
Pf: NA Ce: NA
Lu: NA Cs: NA
Snow Duration: NA

Building Code:
FBC 8th Ed. 2023 Res. HVHZ
TPI Std: 2014
Rep Fac: Yes
FT/RT:20(0)/10(0)
Plate Type(s):
WAVE

Defl/CSI Criteria

PP Deflection in	loc	L/defl	L/#
VERT(LL): 0.181	F	999	360
VERT(CL): 0.327	F	999	240
HORZ(LL): -0.064	I	-	-
HORZ(TL): 0.115	I	-	-

Creep Factor: 2.0
Max TC CSI: 0.985
Max BC CSI: 0.827
Max Web CSI: 0.655
Mfg Specified Camber:

VIEW Ver: 23.02.01A.1204.18

▲ Maximum Reactions (lbs)

Loc	Gravity R+	/ R-	/ Rh	Non-Gravity / Rw	/ U	/ RL
S	-	/-	/171	/-	/-	/269
C	1944	/-	/-	/1504	/1144	/-
T	1635	/-	/171	/1181	/1646	/488

Wind reactions based on C&C
S Brg Wid = 1.5 Min Req = -
C Brg Wid = 16.0 Min Req = 2.3 (Truss)
T Brg Wid = 8.0 Min Req = 1.5 (Support)
Bearings C & L are a rigid surface.

Maximum Top Chord Forces Per Ply (lbs)

Chords	Tens.	Comp.	Chords	Tens.	Comp.
A - B	249	- 203	F - G	2257	- 2805
B - C	261	- 195	G - H	1968	- 2203
C - D	2356	- 3642	H - I	1417	- 1518
D - E	2311	- 3507	I - J	0	0
E - F	2160	- 2856	J - K	0	0

Maximum Bot Chord Forces Per Ply (lbs)

Chords	Tens.	Comp.	Chords	Tens.	Comp.
C - Q	6503	- 3975	O - N	2346	- 1564
Q - P	3251	- 1992	N - M	2049	- 1468
P - O	2346	- 1564	M - L	955	- 577

Maximum Web Forces Per Ply (lbs)

Webs	Tens.	Comp.	Webs	Tens.	Comp.
A - R	229	- 261	G - N	219	- 361
B - R	44	- 7	N - H	477	- 147
R - S	236	- 269	H - M	1045	- 1025
Q - E	173	0	M - I	1187	- 947
E - P	412	- 701	I - L	1786	- 1752
F - P	289	- 370	J - L	157	- 105
P - G	837	- 406			

Lumber
Top chord: 2x4 SP #2;
Bot chord: 2x4 SP #1; B2 2x4 SP #2;
Webs: 2x4 SP #2;
Lt Slider: 2x4 SP #2; block length = 1.750'
Lt Level Return: 2x4 SP #2;

Bracing
(a) Continuous lateral restraint equally spaced on member.

Wind
Member design based on both MWFRS and C&C.
Right end vertical not exposed to wind pressure.
Wind loading based on both gable and hip roof types.

Additional Notes
***** BEARING ANALOG MODIFIED! *****

****WARNING**** READ AND FOLLOW ALL NOTES ON THIS DRAWING!
****IMPORTANT**** FURNISH THIS DRAWING TO ALL CONTRACTORS INCLUDING THE INSTALLERS
Trusses require extreme care in fabricating, handling, shipping, installing and bracing. Refer to and follow the latest edition of BCSI (Building Component Safety Information, by TPI and SBCA) for safety practices prior to performing these functions. Installers shall provide temporary bracing per BCSI. Unless noted otherwise, top chord shall have properly attached structural sheathing and bottom chord shall have a properly attached rigid ceiling. Locations shown for permanent lateral restraint of webs shall have continuous lateral restraint (CLR), installed with diagonal bracing installed on the CLR per BCSI sections B3, B7, or B10, as applicable. Apply plates to each face of truss and position as shown above and on the Joint Details, unless noted otherwise. Refer to drawings 160A-Z for standard plate positions. Refer to job's General Notes page for additional information.
Alpine, a division of ITW Building Components Group Inc. shall not be responsible for any deviation from this drawing, any failure to build the truss in conformance with ANSI/TPI 1, or for handling, shipping, installation and bracing of trusses. A seal on this drawing or cover page listing this drawing, indicates acceptance of professional engineering responsibility solely for the design shown. The suitability and use of this drawing for any structure is the responsibility of the Building Designer per ANSI/TPI 1 Sec.2.
For more information see these web sites: Alpine: alpineitw.com; TPI: tpinst.org; SBCA: sbcacomponents.com; ICC: iccsafe.org; AWC: awc.org

SEQN: 206514 / T77 / HIPM FROM:	Ply: 1 Qty: 1 Wgt: 112.0 lbs	**Job Number:** 24070306 7725 RES. **Truss Label:** 1MH14	DRW: ... / ... 07/24/2024

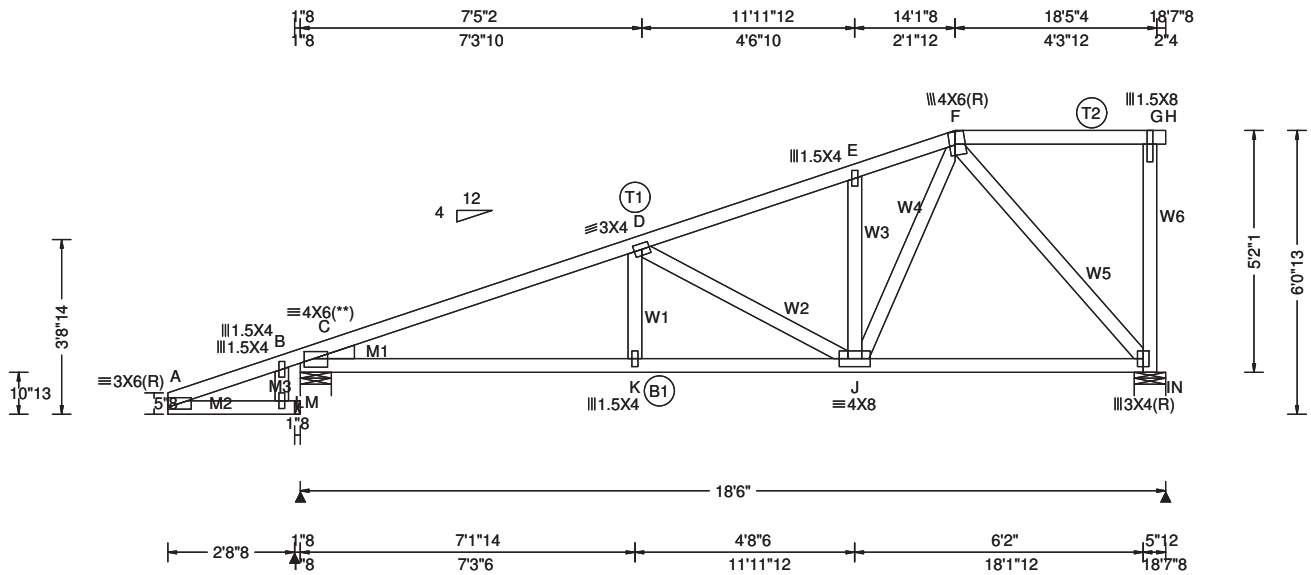

Loading Criteria (psf)

TCLL:	30.00
TCDL:	15.00
BCLL:	0.00
BCDL:	10.00
Des Ld:	55.00
NCBCLL:	10.00
Soffit:	2.00

Load Duration: 1.25
Spacing: 24.0 "

Wind Criteria
Wind Std: ASCE 7-22
Speed: 175 mph
Enclosure: Closed
Risk Category: II
EXP: C Kzt: NA
Mean Height: 15.00 ft
TCDL: 6.0 psf
BCDL: 6.0 psf
MWFRS Parallel Dist: h to 2h
C&C Dist a: 3.00 ft
Loc. from endwall: not in 9.00 ft
GCpi: 0.18
Wind Duration: 1.60

Snow Criteria (Pg,Pf in PSF)
Pg: NA Ct: NA CAT: NA
Pf: NA Ce: NA
Lu: NA Cs: NA
Snow Duration: NA

Building Code:
FBC 8th Ed. 2023 Res. HVHZ
TPI Std: 2014
Rep Fac: Yes
FT/RT:20(0)/10(0)
Plate Type(s):
WAVE

Defl/CSI Criteria

PP Deflection in	loc	L/defl	L/#
VERT(LL): 0.065	K	999	360
VERT(CL): 0.115	K	999	240
HORZ(LL): 0.020	I	-	-
HORZ(TL): 0.036	I	-	-

Creep Factor: 2.0
Max TC CSI: 0.595
Max BC CSI: 0.534
Max Web CSI: 0.712
Mfg Specified Camber:

VIEW Ver: 23.02.01A.1204.18

▲ Maximum Reactions (lbs)

	Gravity			Non-Gravity		
Loc	R+	/ R-	/ Rh	/ Rw	/ U	/ RL
M	-	/-	/247	/-	/-	/295
B	1275	/-	/247	/790	/722	/298
N	1004	/-	/-	/507	/833	/-

Wind reactions based on C&C
M Brg Wid = 1.5 Min Req = -
B Brg Wid = 8.0 Min Req = 1.5 (Truss)
N Brg Wid = 8.0 Min Req = 1.5 (Support)
Bearings B & I are a rigid surface.

Maximum Top Chord Forces Per Ply (lbs)

Chords	Tens.	Comp.	Chords	Tens.	Comp.
A - B	286	- 258	E - F	657	- 1122
B - C	313	- 261	F - G	0	0
C - D	839	- 1910	G - H	0	0
D - E	575	- 1159			

Maximum Bot Chord Forces Per Ply (lbs)

Chords	Tens.	Comp.	Chords	Tens.	Comp.
C - K	1731	- 1032	J - I	658	- 467
K - J	1727	- 1034			

Maximum Web Forces Per Ply (lbs)

Webs	Tens.	Comp.	Webs	Tens.	Comp.
A - L	289	- 247	E - J	242	- 304
B - L	53	- 13	J - F	906	- 423
L - M	295	- 248	F - I	705	- 993
K - D	201	0	G - I	333	- 211
D - J	454	- 807			

Lumber
Top chord: 2x4 SP #2;
Bot chord: 2x4 SP #2;
Webs: 2x4 SP #2;
Lt Wedge: 2x4 SP #2;Lt Level Return: 2x4 SP #2;

Plating Notes
(**) 1 plate(s) require special positioning. Refer to scaled plate plot details for special positioning requirements.

Wind
Member design based on both MWFRS and C&C.
Right end vertical not exposed to wind pressure.
Wind loading based on both gable and hip roof types.

Additional Notes
The maximum horizontal reaction is 247#
***** BEARING ANALOG MODIFIED! *****

****WARNING**** READ AND FOLLOW ALL NOTES ON THIS DRAWING!
****IMPORTANT**** FURNISH THIS DRAWING TO ALL CONTRACTORS INCLUDING THE INSTALLERS
Trusses require extreme care in fabricating, handling, shipping, installing and bracing. Refer to and follow the latest edition of BCSI (Building Component Safety Information, by TPI and SBCA) for safety practices prior to performing these functions. Installers shall provide temporary bracing per BCSI. Unless noted otherwise, top chord shall have properly attached structural sheathing and bottom chord shall have a properly attached rigid ceiling. Locations shown for permanent lateral restraint of webs shall have continuous lateral restraint (CLR), installed with diagonal bracing installed on the CLR per BCSI sections B3, B7, or B10, as applicable. Apply plates to each face of truss and position as shown above and on the Joint Details, unless noted otherwise. Refer to drawings 160A-Z for standard plate positions. Refer to job's General Notes page for additional information.
Alpine, a division of ITW Building Components Group Inc. shall not be responsible for any deviation from this drawing, any failure to build the truss in conformance with ANSI/TPI 1, or for handling, shipping, installation and bracing of trusses. A seal on this drawing or cover page listing this drawing, indicates acceptance of professional engineering responsibility solely for the design shown. The suitability and use of this drawing for any structure is the responsibility of the Building Designer per ANSI/TPI 1 Sec.2.
For more information see these web sites: Alpine: alpineitw.com; TPI: tpinst.org; SBCA: sbcacomponents.com; ICC: iccsafe.org; AWC: awc.org

SEQN: 206517 / T64 / HIPM FROM:	Ply: 1 Qty: 1 Wgt: 148.4 lbs	**Job Number:** 24070306 7725 RES. **Truss Label:** 1MH13	DRW: ... / ... 07/24/2024

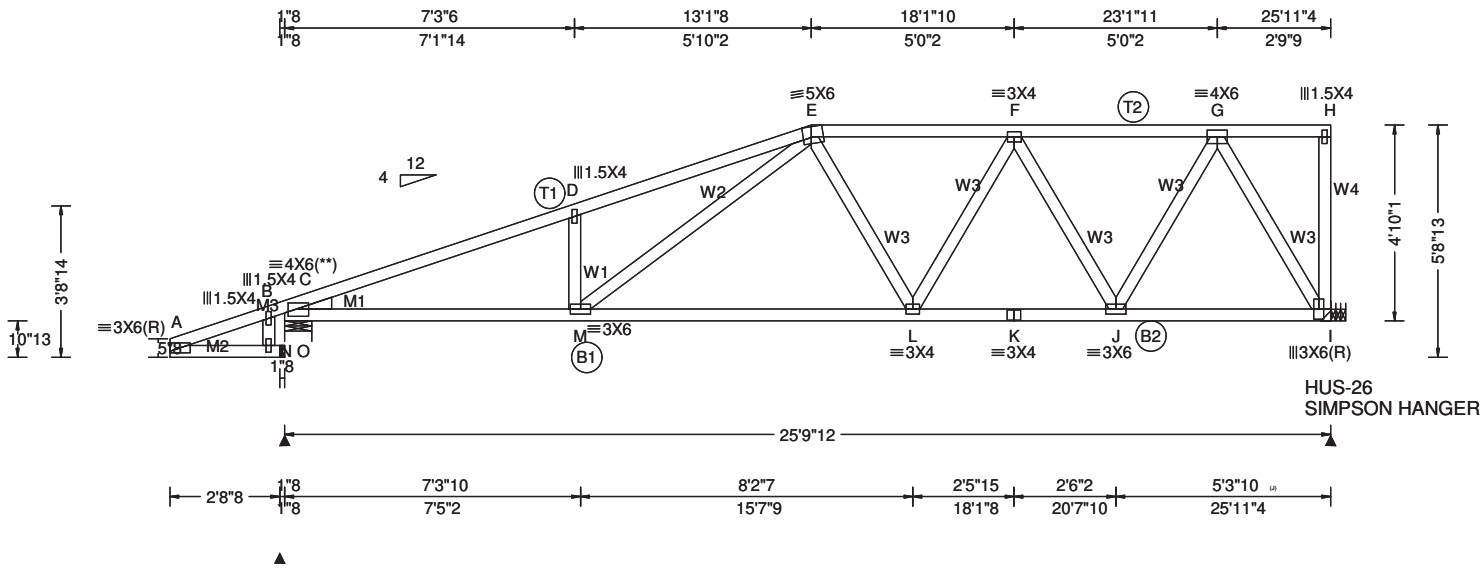

Loading Criteria (psf)

TCLL:	30.00
TCDL:	15.00
BCLL:	0.00
BCDL:	10.00
Des Ld:	55.00
NCBCLL:	10.00
Soffit:	2.00

Load Duration: 1.25
Spacing: 24.0 "

Wind Criteria
Wind Std: ASCE 7-22
Speed: 175 mph
Enclosure: Closed
Risk Category: II
EXP: C Kzt: NA
Mean Height: 15.00 ft
TCDL: 6.0 psf
BCDL: 6.0 psf
MWFRS Parallel Dist: h to 2h
C&C Dist a: 3.00 ft
Loc. from endwall: not in 9.00 ft
GCpi: 0.18
Wind Duration: 1.60

Snow Criteria (Pg,Pf in PSF)
Pg: NA Ct: NA CAT: NA
Pf: NA Ce: NA
Lu: NA Cs: NA
Snow Duration: NA

Building Code:
FBC 8th Ed. 2023 Res. HVHZ
TPI Std: 2014
Rep Fac: Yes
FT/RT:20(0)/10(0)
Plate Type(s):
WAVE

Defl/CSI Criteria

PP Deflection in	loc	L/defl	L/#
VERT(LL): 0.162	D	999	360
VERT(CL): 0.290	D	999	240
HORZ(LL): 0.045	I	-	-
HORZ(TL): 0.080	I	-	-

Creep Factor: 2.0
Max TC CSI: 0.686
Max BC CSI: 0.860
Max Web CSI: 0.724
Mfg Specified Camber:

VIEW Ver: 23.02.01A.1204.18

▲ Maximum Reactions (lbs)

Loc	Gravity R+	Gravity / R-	Gravity / Rh	Non-Gravity / Rw	Non-Gravity / U	Non-Gravity / RL
O	-	/-	/281	/-	/-	/285
B	1682	/-	/281	/990	/817	/253
I	1410	/-	/-	/688	/1176	/-

Wind reactions based on C&C
O Brg Wid = 1.5 Min Req = -
B Brg Wid = 8.0 Min Req = 2.0 (Truss)
I Brg Wid = - Min Req = -
Bearing B is a rigid surface.

Maximum Top Chord Forces Per Ply (lbs)

Chords	Tens.	Comp.	Chords	Tens.	Comp.
A - B	314	- 226	E - F	1359	- 1914
B - C	346	- 230	F - G	992	- 1285
C - D	1545	- 3110	G - H	0	0
D - E	1638	- 3066			

Maximum Bot Chord Forces Per Ply (lbs)

Chords	Tens.	Comp.	Chords	Tens.	Comp.
C - M	2865	- 1640	K - J	1725	- 1345
M - L	2018	- 1412	J - I	792	- 677
L - K	1725	- 1345			

Maximum Web Forces Per Ply (lbs)

Webs	Tens.	Comp.	Webs	Tens.	Comp.
A - N	255	- 282	L - F	442	- 64
B - N	57	- 9	F - J	731	- 911
N - O	262	- 285	J - G	1021	- 654
D - M	286	- 521	G - I	1292	- 1513
M - E	1034	- 264	H - I	102	- 74
E - L	159	- 282			

Lumber
Top chord: 2x4 SP #2;
Bot chord: 2x4 SP #2;
Webs: 2x4 SP #2;
Lt Wedge: 2x4 SP #2;Lt Level Return: 2x4 SP #2;

Plating Notes
(**) 1 plate(s) require special positioning. Refer to scaled plate plot details for special positioning requirements.

Wind
Member design based on both MWFRS and C&C.
Right end vertical not exposed to wind pressure.
Wind loading based on both gable and hip roof types.

Additional Notes
The maximum horizontal reaction is 281#
***** BEARING ANALOG MODIFIED! *****

****WARNING**** READ AND FOLLOW ALL NOTES ON THIS DRAWING!
****IMPORTANT**** FURNISH THIS DRAWING TO ALL CONTRACTORS INCLUDING THE INSTALLERS
Trusses require extreme care in fabricating, handling, shipping, installing and bracing. Refer to and follow the latest edition of BCSI (Building Component Safety Information, by TPI and SBCA) for safety practices prior to performing these functions. Installers shall provide temporary bracing per BCSI. Unless noted otherwise, top chord shall have properly attached structural sheathing and bottom chord shall have a properly attached rigid ceiling. Locations shown for permanent lateral restraint of webs shall have continuous lateral restraint (CLR), installed with diagonal bracing installed on the CLR per BCSI sections B3, B7, or B10, as applicable. Apply plates to each face of truss and position as shown above and on the Joint Details, unless noted otherwise. Refer to drawings 160A-Z for standard plate positions. Refer to job's General Notes page for additional information.
Alpine, a division of ITW Building Components Group Inc. shall not be responsible for any deviation from this drawing, any failure to build the truss in conformance with ANSI/TPI 1, or for handling, shipping, installation and bracing of trusses. A seal on this drawing or cover page listing this drawing, indicates acceptance of professional engineering responsibility solely for the design shown. The suitability and use of this drawing for any structure is the responsibility of the Building Designer per ANSI/TPI 1 Sec.2.
For more information see these web sites: Alpine: alpineitw.com; TPI: tpinst.org; SBCA: sbcacomponents.com; ICC: iccsafe.org; AWC: awc.org

SEQN: 139347 / T5 / HIPM FROM:	Ply: 1 Qty: 1 Wgt: 166.6 lbs	**Job Number:** 24070306 7725 RES. **Truss Label:** 1MH13P	DRW: ... / ... 07/24/2024

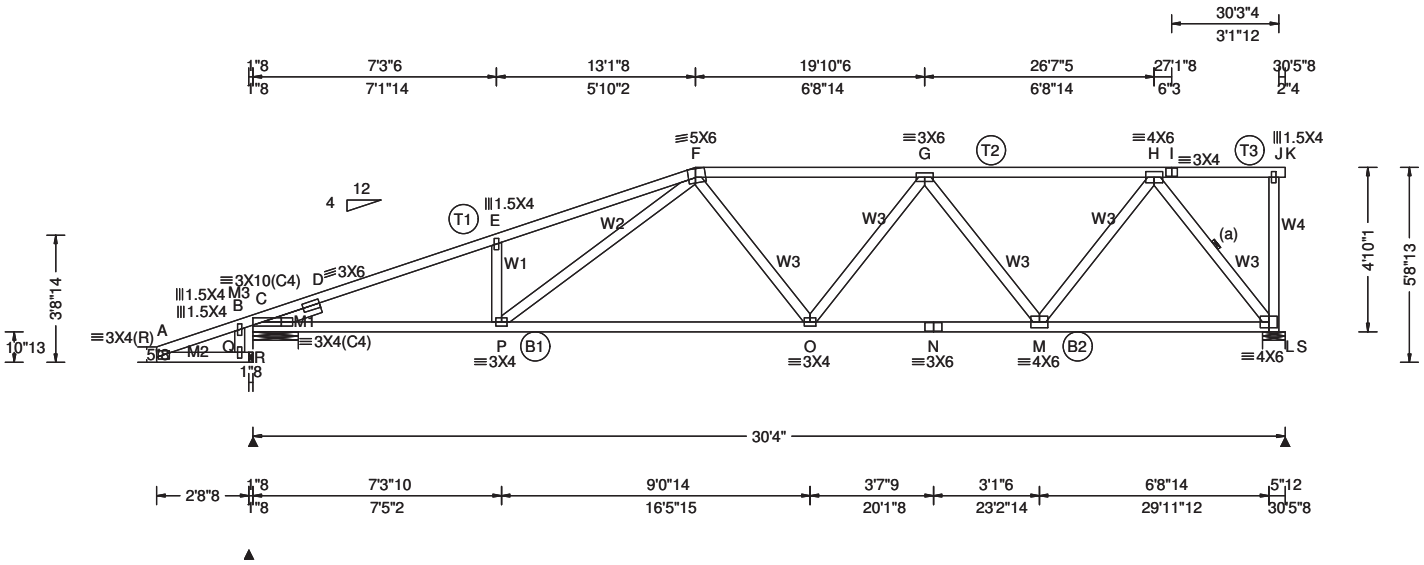

Loading Criteria (psf)

TCLL: 30.00
TCDL: 15.00
BCLL: 0.00
BCDL: 10.00
Des Ld: 55.00
NCBCLL: 10.00
Soffit: 2.00
Load Duration: 1.25
Spacing: 24.0 "

Wind Criteria

Wind Std: ASCE 7-22
Speed: 175 mph
Enclosure: Part. Enc.
Risk Category: II
EXP: C Kzt: NA
Mean Height: 15.00 ft
TCDL: 6.0 psf
BCDL: 6.0 psf
MWFRS Parallel Dist: h to 2h
C&C Dist a: 3.03 ft
Loc. from endwall: not in 9.00 ft
GCpi: 0.55
Wind Duration: 1.60

Snow Criteria (Pg,Pf in PSF)

Pg: NA Ct: NA CAT: NA
Pf: NA Ce: NA
Lu: NA Cs: NA
Snow Duration: NA

Building Code:
FBC 8th Ed. 2023 Res. HVHZ
TPI Std: 2014
Rep Fac: Yes
FT/RT:20(0)/10(0)
Plate Type(s):
WAVE

Defl/CSI Criteria

PP Deflection in	loc	L/defl	L/#
VERT(LL): 0.137	P	999	360
VERT(CL): 0.245	P	999	240
HORZ(LL): -0.027	H	-	-
HORZ(TL): 0.049	H	-	-

Creep Factor: 2.0
Max TC CSI: 0.924
Max BC CSI: 0.567
Max Web CSI: 0.586
Mfg Specified Camber:

VIEW Ver: 23.02.01A.1204.18

▲ Maximum Reactions (lbs)

Loc	Gravity R+	/ R-	/ Rh	Non-Gravity / Rw	/ U	/ RL
R	-	/-	/276	/-	/-	/264
C	1929	/-	/2580	/1489	/1225	/1879
S	1649	/-	/2356	/1181	/1703	/2173

Wind reactions based on C&C
R Brg Wid = 1.5 Min Req = -
C Brg Wid = 16.0 Min Req = 2.3 (Truss)
S Brg Wid = 8.0 Min Req = 1.5 (Support)
Bearings C & L are a rigid surface.

Maximum Top Chord Forces Per Ply (lbs)

Chords	Tens.	Comp.	Chords	Tens.	Comp.
A - B	310	- 219	F - G	2431	- 2655
B - C	318	- 213	G - H	1836	- 1910
C - D	2672	- 3844	H - I	0	0
D - E	2656	- 3686	I - J	0	0
E - F	2767	- 3649	J - K	0	0

Maximum Bot Chord Forces Per Ply (lbs)

Chords	Tens.	Comp.	Chords	Tens.	Comp.
C - P	1314	- 752	N - M	169	- 443
P - O	308	- 271	M - L	914	- 1161
O - N	169	- 443			

Maximum Web Forces Per Ply (lbs)

Webs	Tens.	Comp.	Webs	Tens.	Comp.
A - Q	246	- 270	O - G	481	- 80
B - Q	53	- 8	G - M	1085	- 1023
Q - R	255	- 276	M - H	1200	- 970
E - P	394	- 468	H - L	2006	- 1905
P - F	970	- 438	J - L	174	- 113
F - O	195	- 285			

Lumber

Top chord: 2x4 SP #2; T2 2x4 SP #1;
Bot chord: 2x4 SP #2;
Webs: 2x4 SP #2;
Lt Slider: 2x4 SP #2; block length = 1.750'
Lt Level Return: 2x4 SP #2;

Bracing

(a) Continuous lateral restraint equally spaced on member.

Wind

Member design based on both MWFRS and C&C.

Right end vertical not exposed to wind pressure.

Wind loading based on both gable and hip roof types.

Left bottom chord exposed to wind.

Additional Notes

The maximum horizontal reaction is 2580#

***** BEARING ANALOG MODIFIED! *****

****WARNING**** READ AND FOLLOW ALL NOTES ON THIS DRAWING!
****IMPORTANT**** FURNISH THIS DRAWING TO ALL CONTRACTORS INCLUDING THE INSTALLERS

Trusses require extreme care in fabricating, handling, shipping, installing and bracing. Refer to and follow the latest edition of BCSI (Building Component Safety Information, by TPI and SBCA) for safety practices prior to performing these functions. Installers shall provide temporary bracing per BCSI. Unless noted otherwise, top chord shall have properly attached structural sheathing and bottom chord shall have a properly attached rigid ceiling. Locations shown for permanent lateral restraint of webs shall have continuous lateral restraint (CLR), installed with diagonal bracing installed on the CLR per BCSI sections B3, B7, or B10, as applicable. Apply plates to each face of truss and position as shown above and on the Joint Details, unless noted otherwise. Refer to drawings 160A-Z for standard plate positions. Refer to job's General Notes page for additional information.

Alpine, a division of ITW Building Components Group Inc. shall not be responsible for any deviation from this drawing, any failure to build the truss in conformance with ANSI/TPI 1, or for handling, shipping, installation and bracing of trusses. A seal on this drawing or cover page listing this drawing, indicates acceptance of professional engineering responsibility solely for the design shown. The suitability and use of this drawing for any structure is the responsibility of the Building Designer per ANSI/TPI 1 Sec.2.

For more information see these web sites: Alpine: alpineitw.com; TPI: tpinst.org; SBCA: sbcacomponents.com; ICC: iccsafe.org; AWC: awc.org

SEQN: 206522 / T76 / HIPM FROM:	Ply: 1 Qty: 1 Wgt: 105.0 lbs	**Job Number:** 24070306 7725 RES. **Truss Label:** 1MH12	DRW: ... / ... 07/24/2024

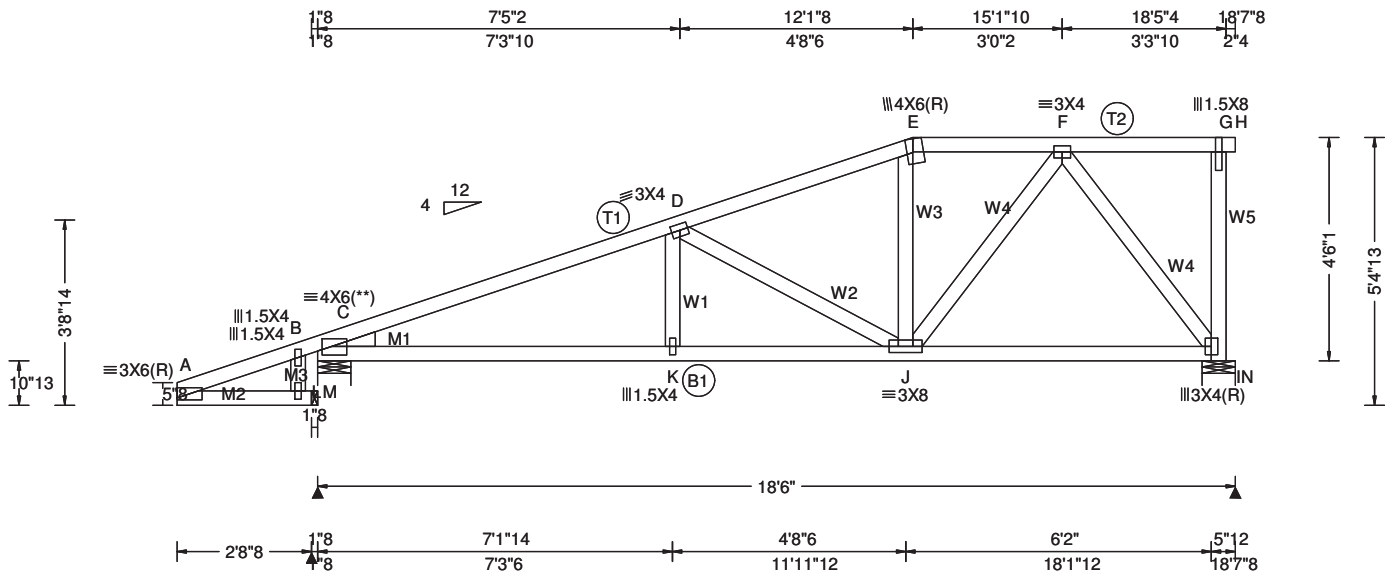

Loading Criteria (psf)

TCLL:	30.00
TCDL:	15.00
BCLL:	0.00
BCDL:	10.00
Des Ld:	55.00
NCBCLL:	10.00
Soffit:	2.00

Load Duration: 1.25
Spacing: 24.0 "

Wind Criteria
Wind Std: ASCE 7-22
Speed: 175 mph
Enclosure: Closed
Risk Category: II
EXP: C Kzt: NA
Mean Height: 15.00 ft
TCDL: 6.0 psf
BCDL: 6.0 psf
MWFRS Parallel Dist: h to 2h
C&C Dist a: 3.00 ft
Loc. from endwall: not in 9.00 ft
GCpi: 0.18
Wind Duration: 1.60

Snow Criteria (Pg,Pf in PSF)
Pg: NA Ct: NA CAT: NA
Pf: NA Ce: NA
Lu: NA Cs: NA
Snow Duration: NA

Building Code:
FBC 8th Ed. 2023 Res. HVHZ
TPI Std: 2014
Rep Fac: Yes
FT/RT:20(0)/10(0)
Plate Type(s):
WAVE

Defl/CSI Criteria

PP Deflection in	loc	L/defl	L/#
VERT(LL): 0.064	K	999	360
VERT(CL): 0.112	K	999	240
HORZ(LL): 0.020	I	-	-
HORZ(TL): 0.036	I	-	-

Creep Factor: 2.0
Max TC CSI: 0.558
Max BC CSI: 0.534
Max Web CSI: 0.498
Mfg Specified Camber:

VIEW Ver: 23.02.01A.1204.18

▲ Maximum Reactions (lbs)

Loc	Gravity R+	/ R-	/ Rh	Non-Gravity / Rw	/ U	/ RL
M	-	/-	/248	/-	/-	/302
B	1275	/-	/248	/787	/780	/241
N	1004	/-	/-	/496	/933	/-

Wind reactions based on C&C
M Brg Wid = 1.5 Min Req = -
B Brg Wid = 8.0 Min Req = 1.5 (Truss)
N Brg Wid = 8.0 Min Req = 1.5 (Support)
Bearings B & I are a rigid surface.

Maximum Top Chord Forces Per Ply (lbs)

Chords	Tens.	Comp.	Chords	Tens.	Comp.
A - B	286	- 264	E - F	756	- 1017
B - C	314	- 268	F - G	0	0
C - D	1007	- 1913	G - H	0	0
D - E	748	- 1153			

Maximum Bot Chord Forces Per Ply (lbs)

Chords	Tens.	Comp.	Chords	Tens.	Comp.
C - K	1734	- 1141	J - I	640	- 584
K - J	1730	- 1144			

Maximum Web Forces Per Ply (lbs)

Webs	Tens.	Comp.	Webs	Tens.	Comp.
A - L	296	- 248	J - E	119	0
B - L	53	- 13	J - F	630	- 287
L - M	302	- 248	F - I	946	- 1037
K - D	201	0	G - I	217	- 140
D - J	450	- 820			

Lumber
Top chord: 2x4 SP #2;
Bot chord: 2x4 SP #2;
Webs: 2x4 SP #2;
Lt Wedge: 2x4 SP #2;Lt Level Return: 2x4 SP #2;

Plating Notes
(**) 1 plate(s) require special positioning. Refer to scaled plate plot details for special positioning requirements.

Wind
Member design based on both MWFRS and C&C.
Right end vertical not exposed to wind pressure.
Wind loading based on both gable and hip roof types.

Additional Notes
The maximum horizontal reaction is 248#
***** BEARING ANALOG MODIFIED! *****

****WARNING**** READ AND FOLLOW ALL NOTES ON THIS DRAWING!
****IMPORTANT**** FURNISH THIS DRAWING TO ALL CONTRACTORS INCLUDING THE INSTALLERS
Trusses require extreme care in fabricating, handling, shipping, installing and bracing. Refer to and follow the latest edition of BCSI (Building Component Safety Information, by TPI and SBCA) for safety practices prior to performing these functions. Installers shall provide temporary bracing per BCSI. Unless noted otherwise, top chord shall have properly attached structural sheathing and bottom chord shall have a properly attached rigid ceiling. Locations shown for permanent lateral restraint of webs shall have continuous lateral restraint (CLR), installed with diagonal bracing installed on the CLR per BCSI sections B3, B7, or B10, as applicable. Apply plates to each face of truss and position as shown above and on the Joint Details, unless noted otherwise. Refer to drawings 160A-Z for standard plate positions. Refer to job's General Notes page for additional information.
Alpine, a division of ITW Building Components Group Inc. shall not be responsible for any deviation from this drawing, any failure to build the truss in conformance with ANSI/TPI 1, or for handling, shipping, installation and bracing of trusses. A seal on this drawing or cover page listing this drawing, indicates acceptance of professional engineering responsibility solely for the design shown. The suitability and use of this drawing for any structure is the responsibility of the Building Designer per ANSI/TPI 1 Sec.2.
For more information see these web sites: Alpine: alpineitw.com; TPI: tpinst.org; SBCA: sbcacomponents.com; ICC: iccsafe.org; AWC: awc.org

SEQN: 206525 / T63 / HIPM FROM:	Ply: 1 Qty: 1 Wgt: 144.2 lbs	**Job Number:** 24070306 7725 RES. **Truss Label:** 1MH11	DRW: ... / ... 07/24/2024

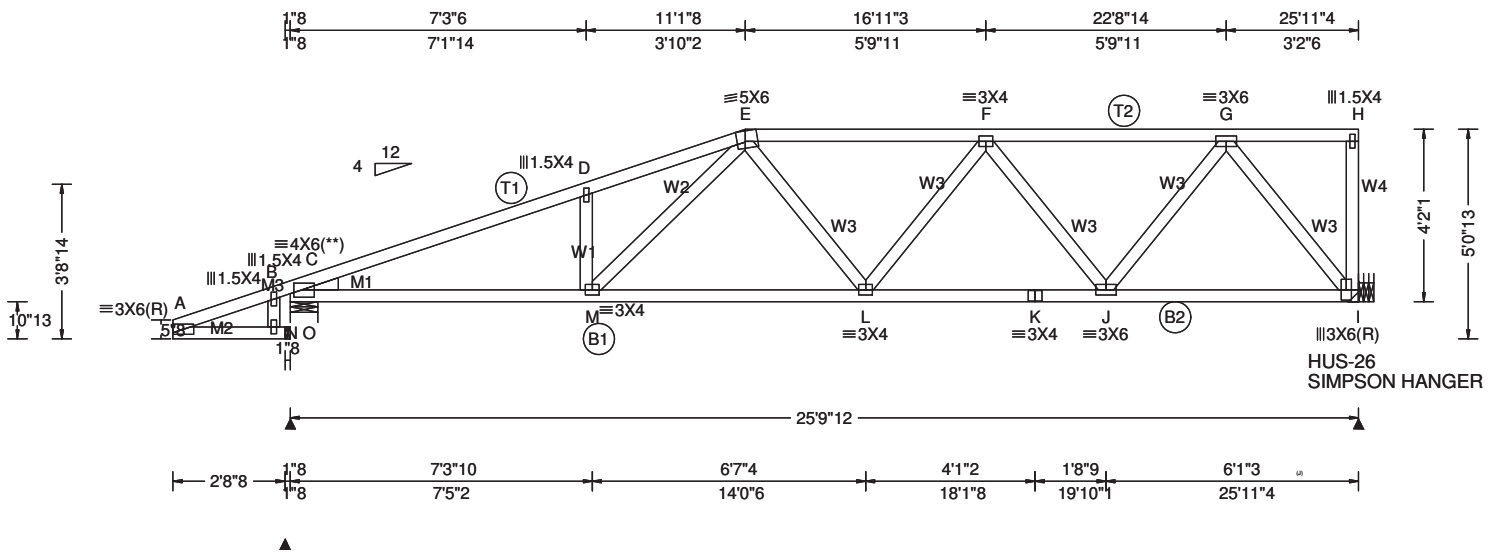

Loading Criteria (psf)

TCLL:	30.00
TCDL:	15.00
BCLL:	0.00
BCDL:	10.00
Des Ld:	55.00
NCBCLL:	10.00
Soffit:	2.00

Load Duration: 1.25
Spacing: 24.0 "

Wind Criteria
Wind Std: ASCE 7-22
Speed: 175 mph
Enclosure: Closed
Risk Category: II
EXP: C Kzt: NA
Mean Height: 15.00 ft
TCDL: 6.0 psf
BCDL: 6.0 psf
MWFRS Parallel Dist: h/2 to h
C&C Dist a: 3.00 ft
Loc. from endwall: not in 9.00 ft
GCpi: 0.18
Wind Duration: 1.60

Snow Criteria (Pg,Pf in PSF)
Pg: NA Ct: NA CAT: NA
Pf: NA Ce: NA
Lu: NA Cs: NA
Snow Duration: NA

Building Code:
FBC 8th Ed. 2023 Res. HVHZ
TPI Std: 2014
Rep Fac: Yes
FT/RT:20(0)/10(0)
Plate Type(s):
WAVE

Defl/CSI Criteria

PP Deflection in	loc	L/defl	L/#
VERT(LL): 0.154	M	999	360
VERT(CL): 0.275	M	999	240
HORZ(LL): 0.048	I	-	-
HORZ(TL): 0.087	I	-	-

Creep Factor: 2.0
Max TC CSI: 0.846
Max BC CSI: 0.824
Max Web CSI: 0.694
Mfg Specified Camber:

VIEW Ver: 23.02.01A.1204.18

Lumber
Top chord: 2x4 SP #2;
Bot chord: 2x4 SP #2;
Webs: 2x4 SP #2;
Lt Wedge: 2x4 SP #2;Lt Level Return: 2x4 SP #2;

Plating Notes
(**) 1 plate(s) require special positioning. Refer to scaled plate plot details for special positioning requirements.

Wind
Member design based on both MWFRS and C&C.
Right end vertical not exposed to wind pressure.
Wind loading based on both gable and hip roof types.

Additional Notes
The maximum horizontal reaction is 270#
***** BEARING ANALOG MODIFIED! *****

▲ Maximum Reactions (lbs)

Loc	Gravity R+	Gravity / R-	Non-Gravity / Rh	Non-Gravity / Rw	Non-Gravity / U	Non-Gravity / RL
O	-	/-	/270	/-	/-	/272
B	1683	/-	/270	/984	/902	/239
I	1409	/-	/-	/680	/1224	/-

Wind reactions based on C&C
O Brg Wid = 1.5 Min Req = -
B Brg Wid = 8.0 Min Req = 2.0 (Truss)
I Brg Wid = - Min Req = -
Bearing B is a rigid surface.

Maximum Top Chord Forces Per Ply (lbs)

Chords	Tens.	Comp.	Chords	Tens.	Comp.
A - B	305	- 232	E - F	1723	- 2289
B - C	335	- 236	F - G	1336	- 1665
C - D	1765	- 3068	G - H	0	- 7
D - E	1833	- 2998			

Maximum Bot Chord Forces Per Ply (lbs)

Chords	Tens.	Comp.	Chords	Tens.	Comp.
C - M	2821	- 1806	K - J	2187	- 1798
M - L	2292	- 1693	J - I	1048	- 937
L - K	2187	- 1798			

Maximum Web Forces Per Ply (lbs)

Webs	Tens.	Comp.	Webs	Tens.	Comp.
A - N	261	- 269	L - F	414	- 30
B - N	55	- 10	F - J	793	- 872
N - O	269	- 272	J - G	1028	- 688
D - M	288	- 415	G - I	1472	- 1641
M - E	722	- 277	H - I	116	- 89
E - L	121	- 278			

****WARNING**** READ AND FOLLOW ALL NOTES ON THIS DRAWING!
****IMPORTANT**** FURNISH THIS DRAWING TO ALL CONTRACTORS INCLUDING THE INSTALLERS
Trusses require extreme care in fabricating, handling, shipping, installing and bracing. Refer to and follow the latest edition of BCSI (Building Component Safety Information, by TPI and SBCA) for safety practices prior to performing these functions. Installers shall provide temporary bracing per BCSI. Unless noted otherwise, top chord shall have properly attached structural sheathing and bottom chord shall have a properly attached rigid ceiling. Locations shown for permanent lateral restraint of webs shall have continuous lateral restraint (CLR), installed with diagonal bracing installed on the CLR per BCSI sections B3, B7, or B10, as applicable. Apply plates to each face of truss and position as shown above and on the Joint Details, unless noted otherwise. Refer to drawings 160A-Z for standard plate positions. Refer to job's General Notes page for additional information.
Alpine, a division of ITW Building Components Group Inc. shall not be responsible for any deviation from this drawing, any failure to build the truss in conformance with ANSI/TPI 1, or for handling, shipping, installation and bracing of trusses. A seal on this drawing or cover page listing this drawing, indicates acceptance of professional engineering responsibility solely for the design shown. The suitability and use of this drawing for any structure is the responsibility of the Building Designer per ANSI/TPI 1 Sec.2.
For more information see these web sites: Alpine: alpineitw.com; TPI: tpinst.org; SBCA: sbcacomponents.com; ICC: iccsafe.org; AWC: awc.org

SEQN: 139331 / T39 / HIPM FROM:	Ply: 1 Qty: 1 Wgt: 169.4 lbs	**Job Number:** 24070306 7725 RES. **Truss Label:** 1MH11P	DRW: ... / ... 07/24/2024

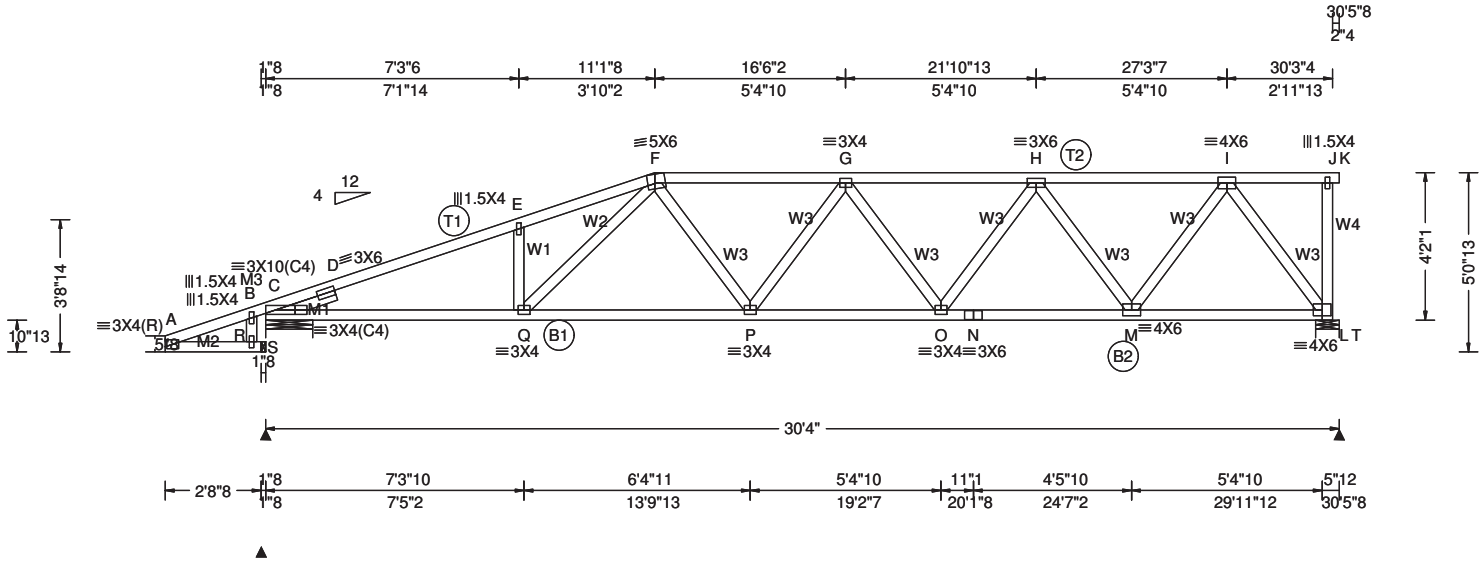

Loading Criteria (psf)		**Wind Criteria**	**Snow Criteria** (Pg,Pf in PSF)	**Defl/CSI Criteria**
TCLL:	30.00	Wind Std: ASCE 7-22	Pg: NA Ct: NA CAT: NA	PP Deflection in loc L/defl L/#
TCDL:	15.00	Speed: 175 mph	Pf: NA Ce: NA	VERT(LL): 0.133 P 999 360
BCLL:	0.00	Enclosure: Part. Enc.	Lu: NA Cs: NA	VERT(CL): 0.239 P 999 240
BCDL:	10.00	Risk Category: II	Snow Duration: NA	HORZ(LL): -0.030 J - -
Des Ld:	55.00	EXP: C Kzt: NA	Building Code:	HORZ(TL): 0.054 J - -
NCBCLL:	10.00	Mean Height: 15.00 ft	FBC 8th Ed. 2023 Res. HVHZ	Creep Factor: 2.0
Soffit:	2.00	TCDL: 6.0 psf	TPI Std: 2014	Max TC CSI: 0.984
Load Duration: 1.25		BCDL: 6.0 psf	Rep Fac: Yes	Max BC CSI: 0.452
Spacing: 24.0 "		MWFRS Parallel Dist: h/2 to h	FT/RT:20(0)/10(0)	Max Web CSI: 0.764
		C&C Dist a: 3.03 ft	Plate Type(s):	Mfg Specified Camber:
		Loc. from endwall: not in 9.00 ft	WAVE	VIEW Ver: 23.02.01A.1204.18
		GCpi: 0.55		
		Wind Duration: 1.60		

Lumber

Top chord: 2x4 SP #2;
Bot chord: 2x4 SP #2;
Webs: 2x4 SP #2;
Lt Slider: 2x4 SP #2; block length = 1.750'
Lt Level Return: 2x4 SP #2;

Wind

Member design based on both MWFRS and C&C.

Right end vertical not exposed to wind pressure.

Wind loading based on both gable and hip roof types.

Additional Notes

The maximum horizontal reaction is 2793#

***** BEARING ANALOG MODIFIED! *****

▲ Maximum Reactions (lbs)

Loc	Gravity R+	Gravity / R-	Non-Gravity / Rh	Non-Gravity / Rw	Non-Gravity / U	Non-Gravity / RL
S	-	/-	/271	/-	/-	/269
C	1930	/-	/2793	/1484	/1323	/2260
T	1648	/-	/2581	/1171	/1745	/2508

Wind reactions based on C&C
S Brg Wid = 1.5 Min Req = -
C Brg Wid = 16.0 Min Req = 2.3 (Truss)
T Brg Wid = 8.0 Min Req = 1.5 (Support)
Bearings C & L are a rigid surface.

Maximum Top Chord Forces Per Ply (lbs)

Chords	Tens.	Comp.	Chords	Tens.	Comp.
A - B	306	- 230	F - G	2949	- 3087
B - C	313	- 227	G - H	2896	- 2913
C - D	3056	- 3791	H - I	1933	- 1920
D - E	2937	- 3632	I - J	1	- 5
E - F	3025	- 3573	J - K	0	0

Maximum Bot Chord Forces Per Ply (lbs)

Chords	Tens.	Comp.	Chords	Tens.	Comp.
C - Q	1041	- 727	O - N	92	- 344
Q - P	325	- 260	N - M	92	- 344
P - O	594	- 716	M - L	1256	- 1416

Maximum Web Forces Per Ply (lbs)

Webs	Tens.	Comp.	Webs	Tens.	Comp.
A - R	259	- 265	G - O	488	- 457
B - R	52	- 10	O - H	571	- 409
R - S	269	- 271	H - M	1287	- 1170
E - Q	411	- 413	M - I	1322	- 1196
Q - F	718	- 417	I - L	2050	- 1905
F - P	319	- 458	J - L	144	- 96
P - G	534	- 153			

****WARNING**** READ AND FOLLOW ALL NOTES ON THIS DRAWING!
****IMPORTANT**** FURNISH THIS DRAWING TO ALL CONTRACTORS INCLUDING THE INSTALLERS
Trusses require extreme care in fabricating, handling, shipping, installing and bracing. Refer to and follow the latest edition of BCSI (Building Component Safety Information, by TPI and SBCA) for safety practices prior to performing these functions. Installers shall provide temporary bracing per BCSI. Unless noted otherwise, top chord shall have properly attached structural sheathing and bottom chord shall have a properly attached rigid ceiling. Locations shown for permanent lateral restraint of webs shall have continuous lateral restraint (CLR), installed with diagonal bracing installed on the CLR per BCSI sections B3, B7, or B10, as applicable. Apply plates to each face of truss and position as shown above and on the Joint Details, unless noted otherwise. Refer to drawings 160A-Z for standard plate positions. Refer to job's General Notes page for additional information.
Alpine, a division of ITW Building Components Group Inc. shall not be responsible for any deviation from this drawing, any failure to build the truss in conformance with ANSI/TPI 1, or for handling, shipping, installation and bracing of trusses. A seal on this drawing or cover page listing this drawing, indicates acceptance of professional engineering responsibility solely for the design shown. The suitability and use of this drawing for any structure is the responsibility of the Building Designer per ANSI/TPI 1 Sec.2.
For more information see these web sites: Alpine: alpineitw.com; TPI: tpinst.org; SBCA: sbcacomponents.com; ICC: iccsafe.org; AWC: awc.org

SEQN: 206528 / T75 / HIPM FROM:	Ply: 1 Qty: 1 Wgt: 109.2 lbs	**Job Number:** 24070306 7725 RES. **Truss Label:** 1MH10	DRW: ... / ... 07/24/2024

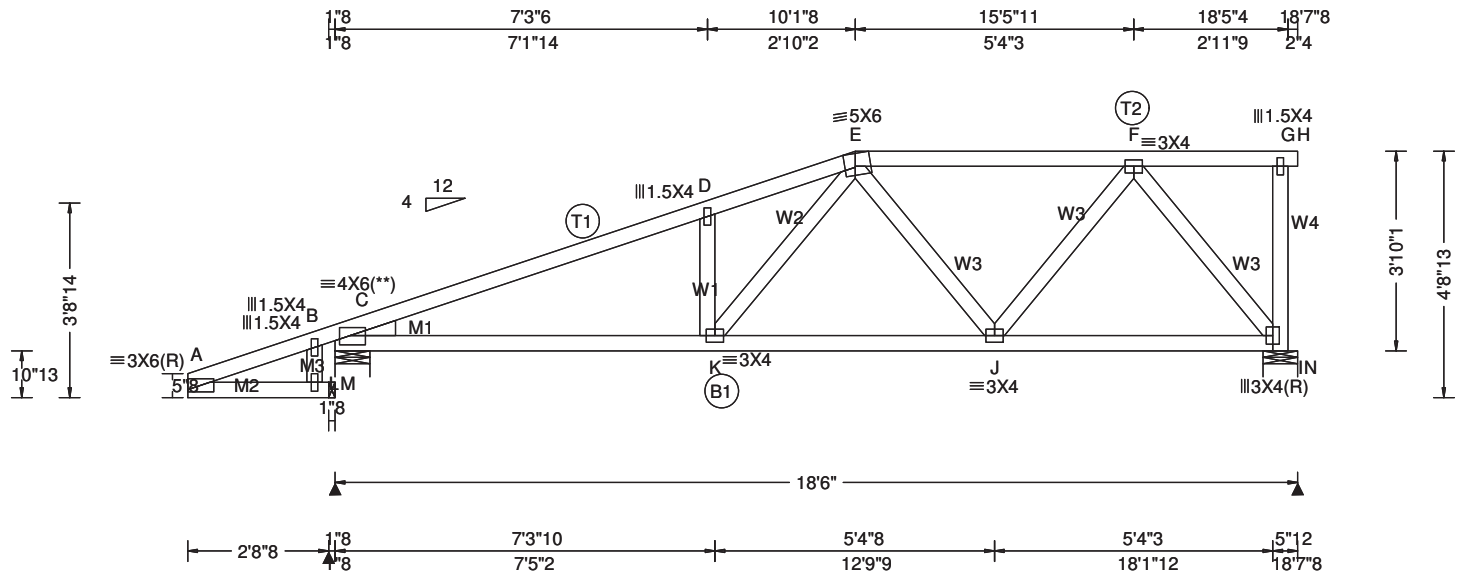

Loading Criteria (psf)

TCLL:	30.00
TCDL:	15.00
BCLL:	0.00
BCDL:	10.00
Des Ld:	55.00
NCBCLL:	10.00
Soffit:	2.00

Load Duration: 1.25
Spacing: 24.0 "

Wind Criteria
Wind Std: ASCE 7-22
Speed: 175 mph
Enclosure: Closed
Risk Category: II
EXP: C Kzt: NA
Mean Height: 15.00 ft
TCDL: 6.0 psf
BCDL: 6.0 psf
MWFRS Parallel Dist: h/2 to h
C&C Dist a: 3.00 ft
Loc. from endwall: not in 9.00 ft
GCpi: 0.18
Wind Duration: 1.60

Snow Criteria (Pg,Pf in PSF)
Pg: NA Ct: NA CAT: NA
Pf: NA Ce: NA
Lu: NA Cs: NA
Snow Duration: NA

Building Code:
FBC 8th Ed. 2023 Res. HVHZ
TPI Std: 2014
Rep Fac: Yes
FT/RT:20(0)/10(0)
Plate Type(s):
WAVE

Defl/CSI Criteria

PP Deflection in	loc	L/defl	L/#
VERT(LL): 0.064	D	999	360
VERT(CL): 0.111	D	999	240
HORZ(LL): 0.019	I	-	-
HORZ(TL): 0.034	I	-	-

Creep Factor: 2.0
Max TC CSI: 0.654
Max BC CSI: 0.533
Max Web CSI: 0.407
Mfg Specified Camber:

VIEW Ver: 23.02.01A.1204.18

▲ Maximum Reactions (lbs)

Loc	Gravity R+	/ R-	/ Rh	Non-Gravity / Rw	/ U	/ RL
M	-	/-	/247	/-	/-	/307
B	1275	/-	/247	/782	/854	/230
N	1004	/-	/-	/486	/1059	/-

Wind reactions based on C&C
M Brg Wid = 1.5 Min Req = -
B Brg Wid = 8.0 Min Req = 1.5 (Truss)
N Brg Wid = 8.0 Min Req = 1.5 (Support)
Bearings B & I are a rigid surface.

Maximum Top Chord Forces Per Ply (lbs)

Chords	Tens.	Comp.	Chords	Tens.	Comp.
A - B	286	- 268	E - F	970	- 1053
B - C	313	- 273	F - G	0	- 5
C - D	1316	- 1907	G - H	0	0
D - E	1406	- 1839			

Maximum Bot Chord Forces Per Ply (lbs)

Chords	Tens.	Comp.	Chords	Tens.	Comp.
C - K	1728	- 1407	J - I	734	- 792
K - J	1282	- 1199			

Maximum Web Forces Per Ply (lbs)

Webs	Tens.	Comp.	Webs	Tens.	Comp.
A - L	300	- 247	E - J	381	- 380
B - L	53	- 14	J - F	528	- 295
L - M	307	- 247	F - I	1234	- 1139
D - K	321	- 422	G - I	136	- 87
K - E	684	- 304			

Lumber
Top chord: 2x4 SP #2;
Bot chord: 2x4 SP #2;
Webs: 2x4 SP #2;
Lt Wedge: 2x4 SP #2;Lt Level Return: 2x4 SP #2;

Plating Notes
(**) 1 plate(s) require special positioning. Refer to scaled plate plot details for special positioning requirements.

Wind
Member design based on both MWFRS and C&C.
Right end vertical not exposed to wind pressure.
Wind loading based on both gable and hip roof types.

Additional Notes
The maximum horizontal reaction is 247#
***** BEARING ANALOG MODIFIED! *****

****WARNING**** READ AND FOLLOW ALL NOTES ON THIS DRAWING!
****IMPORTANT**** FURNISH THIS DRAWING TO ALL CONTRACTORS INCLUDING THE INSTALLERS
Trusses require extreme care in fabricating, handling, shipping, installing and bracing. Refer to and follow the latest edition of BCSI (Building Component Safety Information, by TPI and SBCA) for safety practices prior to performing these functions. Installers shall provide temporary bracing per BCSI. Unless noted otherwise, top chord shall have properly attached structural sheathing and bottom chord shall have a properly attached rigid ceiling. Locations shown for permanent lateral restraint of webs shall have continuous lateral restraint (CLR), installed with diagonal bracing installed on the CLR per BCSI sections B3, B7, or B10, as applicable. Apply plates to each face of truss and position as shown above and on the Joint Details, unless noted otherwise. Refer to drawings 160A-Z for standard plate positions. Refer to job's General Notes page for additional information.
Alpine, a division of ITW Building Components Group Inc. shall not be responsible for any deviation from this drawing, any failure to build the truss in conformance with ANSI/TPI 1, or for handling, shipping, installation and bracing of trusses. A seal on this drawing or cover page listing this drawing, indicates acceptance of professional engineering responsibility solely for the design shown. The suitability and use of this drawing for any structure is the responsibility of the Building Designer per ANSI/TPI 1 Sec.2.
For more information see these web sites: Alpine: alpineitw.com; TPI: tpinst.org; SBCA: sbcacomponents.com; ICC: iccsafe.org; AWC: awc.org

SEQN: 206531 / T62 / HIPM FROM:	Ply: 1 Qty: 1 Wgt: 138.6 lbs	**Job Number:** 24070306 7725 RES. **Truss Label:** 1MH9	DRW: ... / ... 07/24/2024

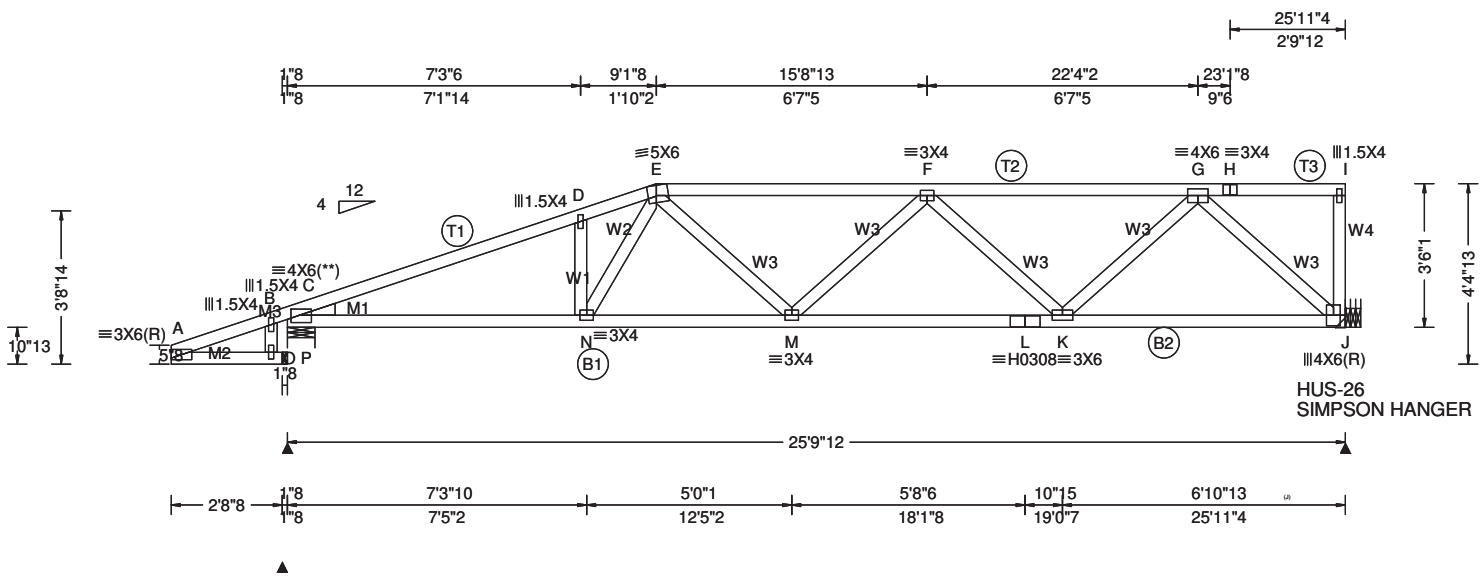

Loading Criteria (psf)

TCLL:	30.00
TCDL:	15.00
BCLL:	0.00
BCDL:	10.00
Des Ld:	55.00
NCBCLL:	10.00
Soffit:	2.00

Load Duration: 1.25
Spacing: 24.0 "

Wind Criteria
Wind Std: ASCE 7-22
Speed: 175 mph
Enclosure: Closed
Risk Category: II
EXP: C Kzt: NA
Mean Height: 15.00 ft
TCDL: 6.0 psf
BCDL: 6.0 psf
MWFRS Parallel Dist: h/2 to h
C&C Dist a: 3.00 ft
Loc. from endwall: not in 9.00 ft
GCpi: 0.18
Wind Duration: 1.60

Snow Criteria (Pg,Pf in PSF)
Pg: NA Ct: NA CAT: NA
Pf: NA Ce: NA
Lu: NA Cs: NA
Snow Duration: NA

Building Code:
FBC 8th Ed. 2023 Res. HVHZ
TPI Std: 2014
Rep Fac: Yes
FT/RT:20(0)/10(0)
Plate Type(s):
WAVE, HS

Defl/CSI Criteria

PP Deflection in	loc	L/defl	L/#
VERT(LL): 0.167	M	999	360
VERT(CL): 0.299	M	999	240
HORZ(LL): 0.054	J	-	-
HORZ(TL): 0.097	J	-	-

Creep Factor: 2.0
Max TC CSI: 0.766
Max BC CSI: 0.864
Max Web CSI: 0.728
Mfg Specified Camber:

VIEW Ver: 23.02.01A.1204.18

▲ Maximum Reactions (lbs)

Loc	Gravity R+	Gravity / R-	Gravity / Rh	Non-Gravity / Rw	Non-Gravity / U	Non-Gravity / RL
P	-	/-	/263	/-	/-	/278
B	1683	/-	/263	/976	/996	/224
J	1408	/-	/-	/673	/1263	/-

Wind reactions based on C&C
P Brg Wid = 1.5 Min Req = -
B Brg Wid = 8.0 Min Req = 2.0 (Truss)
J Brg Wid = - Min Req = -
Bearing B is a rigid surface.

Maximum Top Chord Forces Per Ply (lbs)

Chords	Tens.	Comp.	Chords	Tens.	Comp.
A - B	299	- 239	E - F	2171	- 2745
B - C	328	- 245	F - G	1801	- 2175
C - D	2017	- 3053	G - H	0	- 11
D - E	2053	- 2957	H - I	0	- 11

Maximum Bot Chord Forces Per Ply (lbs)

Chords	Tens.	Comp.	Chords	Tens.	Comp.
C - N	2807	- 2006	L - K	2791	- 2407
N - M	2574	- 1992	K - J	1405	- 1303
M - L	2791	- 2407			

Maximum Web Forces Per Ply (lbs)

Webs	Tens.	Comp.	Webs	Tens.	Comp.
A - O	269	- 262	M - F	444	- 67
B - O	55	- 11	F - K	878	- 860
O - P	278	- 264	K - G	1074	- 738
D - N	228	- 440	G - J	1747	- 1874
N - E	670	- 172	I - J	131	- 100
E - M	243	- 369			

Lumber
Top chord: 2x4 SP #2; T2 2x4 SP #1;
Bot chord: 2x4 SP #2;
Webs: 2x4 SP #2;
Lt Wedge: 2x4 SP #2;Lt Level Return: 2x4 SP #2;

Plating Notes
(**) 1 plate(s) require special positioning. Refer to scaled plate plot details for special positioning requirements.

Wind
Member design based on both MWFRS and C&C.
Right end vertical not exposed to wind pressure.
Wind loading based on both gable and hip roof types.

Additional Notes
The maximum horizontal reaction is 263#
***** BEARING ANALOG MODIFIED! *****

****WARNING**** READ AND FOLLOW ALL NOTES ON THIS DRAWING!
****IMPORTANT**** FURNISH THIS DRAWING TO ALL CONTRACTORS INCLUDING THE INSTALLERS

Trusses require extreme care in fabricating, handling, shipping, installing and bracing. Refer to and follow the latest edition of BCSI (Building Component Safety Information, by TPI and SBCA) for safety practices prior to performing these functions. Installers shall provide temporary bracing per BCSI. Unless noted otherwise, top chord shall have properly attached structural sheathing and bottom chord shall have a properly attached rigid ceiling. Locations shown for permanent lateral restraint of webs shall have continuous lateral restraint (CLR), installed with diagonal bracing installed on the CLR per BCSI sections B3, B7, or B10, as applicable. Apply plates to each face of truss and position as shown above and on the Joint Details, unless noted otherwise. Refer to drawings 160A-Z for standard plate positions. Refer to job's General Notes page for additional information.

Alpine, a division of ITW Building Components Group Inc. shall not be responsible for any deviation from this drawing, any failure to build the truss in conformance with ANSI/TPI 1, or for handling, shipping, installation and bracing of trusses. A seal on this drawing or cover page listing this drawing, indicates acceptance of professional engineering responsibility solely for the design shown. The suitability and use of this drawing for any structure is the responsibility of the Building Designer per ANSI/TPI 1 Sec.2.

For more information see these web sites: Alpine: alpineitw.com; TPI: tpinst.org; SBCA: sbcacomponents.com; ICC: iccsafe.org; AWC: awc.org

SEQN: 139328 / T2 / HIPM FROM:	Ply: 1 Qty: 1 Wgt: 166.6 lbs	**Job Number:** 24070306 7725 RES. **Truss Label:** 1MH9P	DRW: ... / ... 07/24/2024

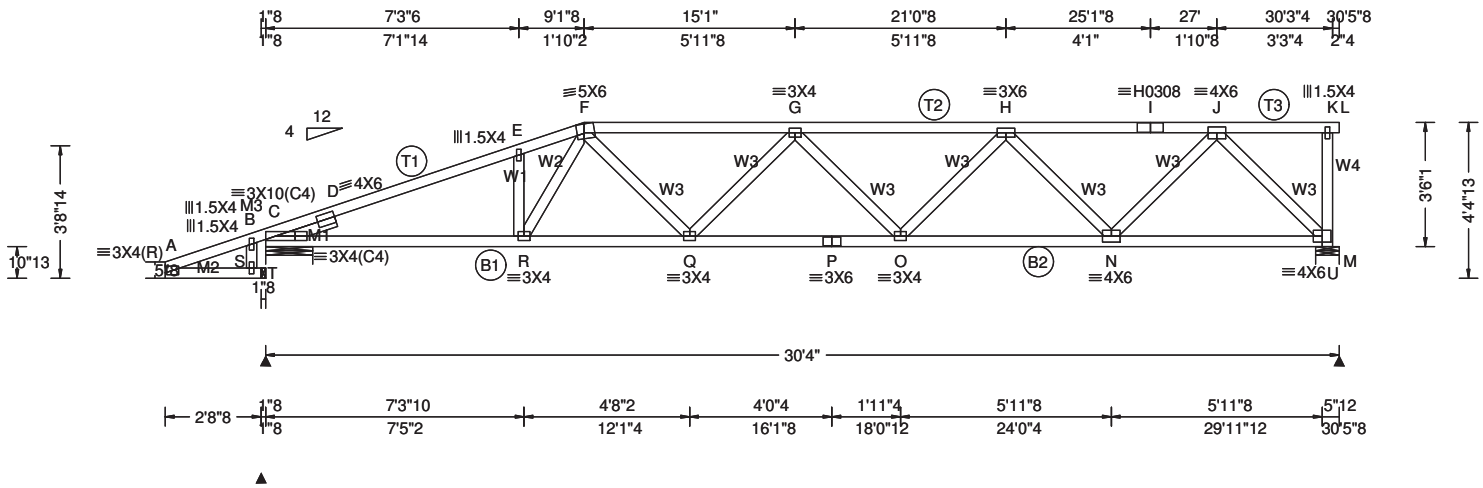

Loading Criteria (psf)

TCLL:	30.00
TCDL:	15.00
BCLL:	0.00
BCDL:	10.00
Des Ld:	55.00
NCBCLL:	10.00
Soffit:	2.00

Load Duration: 1.25
Spacing: 24.0 "

Wind Criteria
Wind Std: ASCE 7-22
Speed: 175 mph
Enclosure: Part. Enc.
Risk Category: II
EXP: C Kzt: NA
Mean Height: 15.00 ft
TCDL: 6.0 psf
BCDL: 6.0 psf
MWFRS Parallel Dist: h/2 to h
C&C Dist a: 3.03 ft
Loc. from endwall: not in 9.00 ft
GCpi: 0.55
Wind Duration: 1.60

Snow Criteria (Pg,Pf in PSF)
Pg: NA Ct: NA CAT: NA
Pf: NA Ce: NA
Lu: NA Cs: NA
Snow Duration: NA

Building Code:
FBC 8th Ed. 2023 Res. HVHZ
TPI Std: 2014
Rep Fac: Yes
FT/RT:20(0)/10(0)
Plate Type(s):
WAVE, HS

Defl/CSI Criteria

PP Deflection in	loc	L/defl	L/#
VERT(LL): -0.155	G	999	360
VERT(CL): 0.267	G	999	240
HORZ(LL): 0.032	K	-	-
HORZ(TL): 0.054	K	-	-

Creep Factor: 2.0
Max TC CSI: 0.908
Max BC CSI: 0.356
Max Web CSI: 0.751
Mfg Specified Camber:

VIEW Ver: 23.02.01A.1204.18

▲ Maximum Reactions (lbs)

Loc	Gravity R+	Gravity / R-	Non-Gravity / Rh	Non-Gravity / Rw	Non-Gravity / U	Non-Gravity / RL
T	-	/-	/268	/-	/-	/275
C	1930	/-	/3136	/1477	/1428	/2800
U	1648	/-	/2928	/1163	/1779	/2999

Wind reactions based on C&C
T Brg Wid = 1.5 Min Req = -
C Brg Wid = 16.0 Min Req = 2.3 (Truss)
U Brg Wid = 8.0 Min Req = 1.5 (Support)
Bearings C & M are a rigid surface.

Maximum Top Chord Forces Per Ply (lbs)

Chords	Tens.	Comp.	Chords	Tens.	Comp.
A - B	304	- 235	G - H	3716	- 3643
B - C	310	- 233	H - I	2555	- 2486
C - D	3454	- 3769	I - J	2555	- 2486
D - E	3237	- 3619	J - K	1	- 9
E - F	3296	- 3538	K - L	0	0
F - G	3538	- 3566			

Maximum Bot Chord Forces Per Ply (lbs)

Chords	Tens.	Comp.	Chords	Tens.	Comp.
C - R	815	- 513	P - O	937	- 1035
R - Q	257	- 161	O - N	392	- 615
Q - P	937	- 1035	N - M	1318	- 1397

Maximum Web Forces Per Ply (lbs)

Webs	Tens.	Comp.	Webs	Tens.	Comp.
A - S	265	- 263	G - O	428	- 325
B - S	52	- 10	O - H	479	- 326
S - T	275	- 268	H - N	1397	- 1221
E - R	339	- 441	N - J	1406	- 1286
R - F	600	- 276	J - M	2354	- 2136
F - Q	605	- 715	K - M	155	- 103
Q - G	782	- 438			

Lumber
Top chord: 2x4 SP #2; T2 2x4 SP #1;
Bot chord: 2x4 SP #1; B2 2x4 SP #2;
Webs: 2x4 SP #2;
Lt Slider: 2x4 SP #2; block length = 1.750'
Lt Level Return: 2x4 SP #2;

Wind
Member design based on both MWFRS and C&C.
Right end vertical not exposed to wind pressure.
Wind loading based on both gable and hip roof types.
Left bottom chord exposed to wind.

Additional Notes
The maximum horizontal reaction is 3136#
***** BEARING ANALOG MODIFIED! *****

****WARNING**** READ AND FOLLOW ALL NOTES ON THIS DRAWING!
****IMPORTANT**** FURNISH THIS DRAWING TO ALL CONTRACTORS INCLUDING THE INSTALLERS

Trusses require extreme care in fabricating, handling, shipping, installing and bracing. Refer to and follow the latest edition of BCSI (Building Component Safety Information, by TPI and SBCA) for safety practices prior to performing these functions. Installers shall provide temporary bracing per BCSI. Unless noted otherwise, top chord shall have properly attached structural sheathing and bottom chord shall have a properly attached rigid ceiling. Locations shown for permanent lateral restraint of webs shall have continuous lateral restraint (CLR), installed with diagonal bracing installed on the CLR per BCSI sections B3, B7, or B10, as applicable. Apply plates to each face of truss and position as shown above and on the Joint Details, unless noted otherwise. Refer to drawings 160A-Z for standard plate positions. Refer to job's General Notes page for additional information.
Alpine, a division of ITW Building Components Group Inc. shall not be responsible for any deviation from this drawing, any failure to build the truss in conformance with ANSI/TPI 1, or for handling, shipping, installation and bracing of trusses. A seal on this drawing or cover page listing this drawing, indicates acceptance of professional engineering responsibility solely for the design shown. The suitability and use of this drawing for any structure is the responsibility of the Building Designer per ANSI/TPI 1 Sec.2.
For more information see these web sites: Alpine: alpineitw.com; TPI: tpinst.org; SBCA: sbcacomponents.com; ICC: iccsafe.org; AWC: awc.org

SEQN: 206534 / T73 / HIPM FROM:	Ply: 1 Qty: 1 Wgt: 100.8 lbs	**Job Number:** 24070306 7725 RES. **Truss Label:** 1MH8	DRW: ... / ... 07/24/2024

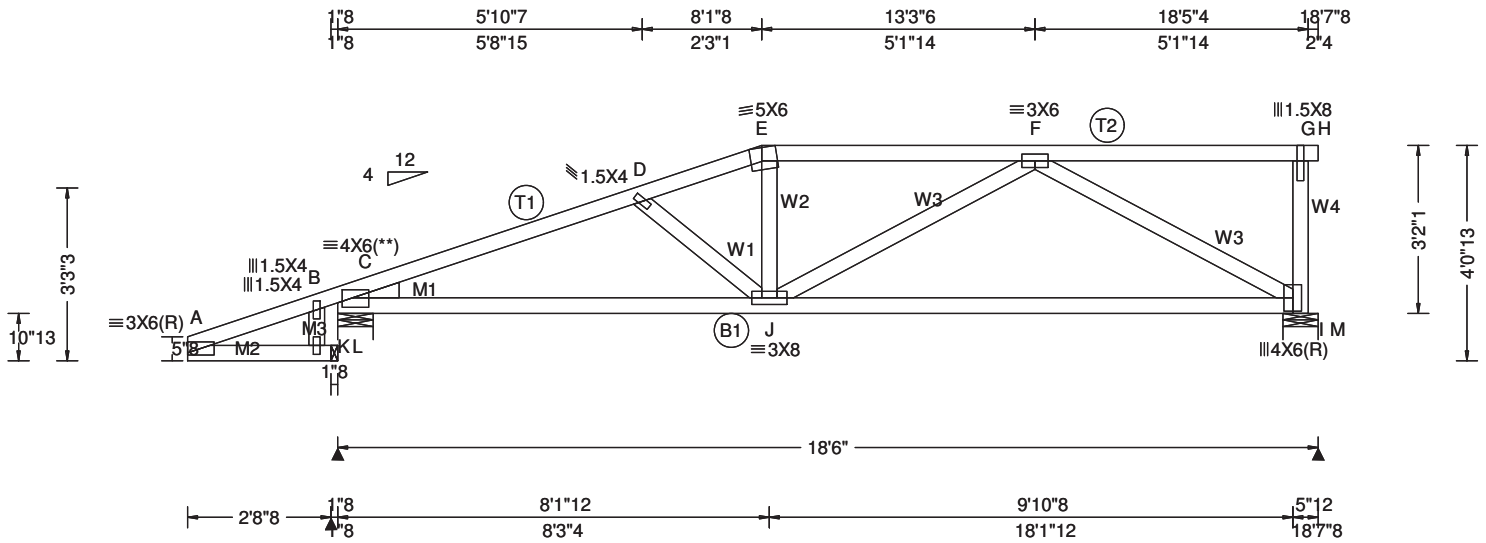

Loading Criteria (psf)

TCLL:	30.00
TCDL:	15.00
BCLL:	0.00
BCDL:	10.00
Des Ld:	55.00
NCBCLL:	10.00
Soffit:	2.00

Load Duration: 1.25
Spacing: 24.0 "

Wind Criteria
Wind Std: ASCE 7-22
Speed: 175 mph
Enclosure: Closed
Risk Category: II
EXP: C Kzt: NA
Mean Height: 15.00 ft
TCDL: 6.0 psf
BCDL: 6.0 psf
MWFRS Parallel Dist: h/2 to h
C&C Dist a: 3.00 ft
Loc. from endwall: not in 9.00 ft
GCpi: 0.18
Wind Duration: 1.60

Snow Criteria (Pg,Pf in PSF)
Pg: NA Ct: NA CAT: NA
Pf: NA Ce: NA
Lu: NA Cs: NA
Snow Duration: NA

Building Code:
FBC 8th Ed. 2023 Res. HVHZ
TPI Std: 2014
Rep Fac: Yes
FT/RT:20(0)/10(0)
Plate Type(s):
WAVE

Defl/CSI Criteria

PP Deflection in	loc	L/defl	L/#
VERT(LL): 0.076	J	999	360
VERT(CL): 0.134	J	999	240
HORZ(LL): -0.027	I	-	-
HORZ(TL): 0.045	I	-	-

Creep Factor: 2.0
Max TC CSI: 0.819
Max BC CSI: 0.986
Max Web CSI: 0.864
Mfg Specified Camber:

VIEW Ver: 23.02.01A.1204.18

▲ Maximum Reactions (lbs)

Loc	Gravity R+	/ R-	/ Rh	Non-Gravity / Rw	/ U	/ RL
L	-	/-	/273	/-	/-	/328
B	1272	/-	/273	/774	/941	/222
M	1007	/-	/-	/480	/1103	/-

Wind reactions based on C&C
L Brg Wid = 1.5 Min Req = -
B Brg Wid = 8.0 Min Req = 1.5 (Truss)
M Brg Wid = 8.0 Min Req = 1.5 (Support)
Bearings B & I are a rigid surface.

Maximum Top Chord Forces Per Ply (lbs)

Chords	Tens.	Comp.	Chords	Tens.	Comp.
A - B	308	- 286	E - F	1453	- 1620
B - C	338	- 293	F - G	8	- 37
C - D	1586	- 2015	G - H	0	0
D - E	1477	- 1726			

Maximum Bot Chord Forces Per Ply (lbs)

Chords	Tens.	Comp.	Chords	Tens.	Comp.
C - J	1842	- 1626	J - I	1308	- 1483

Maximum Web Forces Per Ply (lbs)

Webs	Tens.	Comp.	Webs	Tens.	Comp.
A - K	320	- 275	E - J	254	- 28
B - K	56	- 16	J - F	525	- 11
K - L	328	- 278	F - I	1689	- 1466
D - J	231	- 366	G - I	325	- 207

Lumber
Top chord: 2x4 SP #2;
Bot chord: 2x4 SP #2;
Webs: 2x4 SP #2;
Lt Wedge: 2x4 SP #2;Lt Level Return: 2x4 SP #2;

Plating Notes
(**) 1 plate(s) require special positioning. Refer to scaled plate plot details for special positioning requirements.

Wind
Member design based on both MWFRS and C&C.
Right end vertical not exposed to wind pressure.
Wind loading based on both gable and hip roof types.

Additional Notes
The maximum horizontal reaction is 273#
***** BEARING ANALOG MODIFIED! *****

****WARNING**** READ AND FOLLOW ALL NOTES ON THIS DRAWING!
****IMPORTANT**** FURNISH THIS DRAWING TO ALL CONTRACTORS INCLUDING THE INSTALLERS
Trusses require extreme care in fabricating, handling, shipping, installing and bracing. Refer to and follow the latest edition of BCSI (Building Component Safety Information, by TPI and SBCA) for safety practices prior to performing these functions. Installers shall provide temporary bracing per BCSI. Unless noted otherwise, top chord shall have properly attached structural sheathing and bottom chord shall have a properly attached rigid ceiling. Locations shown for permanent lateral restraint of webs shall have continuous lateral restraint (CLR), installed with diagonal bracing installed on the CLR per BCSI sections B3, B7, or B10, as applicable. Apply plates to each face of truss and position as shown above and on the Joint Details, unless noted otherwise. Refer to drawings 160A-Z for standard plate positions. Refer to job's General Notes page for additional information.
Alpine, a division of ITW Building Components Group Inc. shall not be responsible for any deviation from this drawing, any failure to build the truss in conformance with ANSI/TPI 1, or for handling, shipping, installation and bracing of trusses. A seal on this drawing or cover page listing this drawing, indicates acceptance of professional engineering responsibility solely for the design shown. The suitability and use of this drawing for any structure is the responsibility of the Building Designer per ANSI/TPI 1 Sec.2.
For more information see these web sites: Alpine: alpineitw.com; TPI: tpinst.org; SBCA: sbcacomponents.com; ICC: iccsafe.org; AWC: awc.org

SEQN: 139569 / T4 / HIPM FROM:	Ply: 2 Qty: 1 Wgt: 182.0 lbs	**Job Number:** 24070306 7725 RES. **Truss Label:** 1MH7G	DRW: ... / ... 07/24/2024

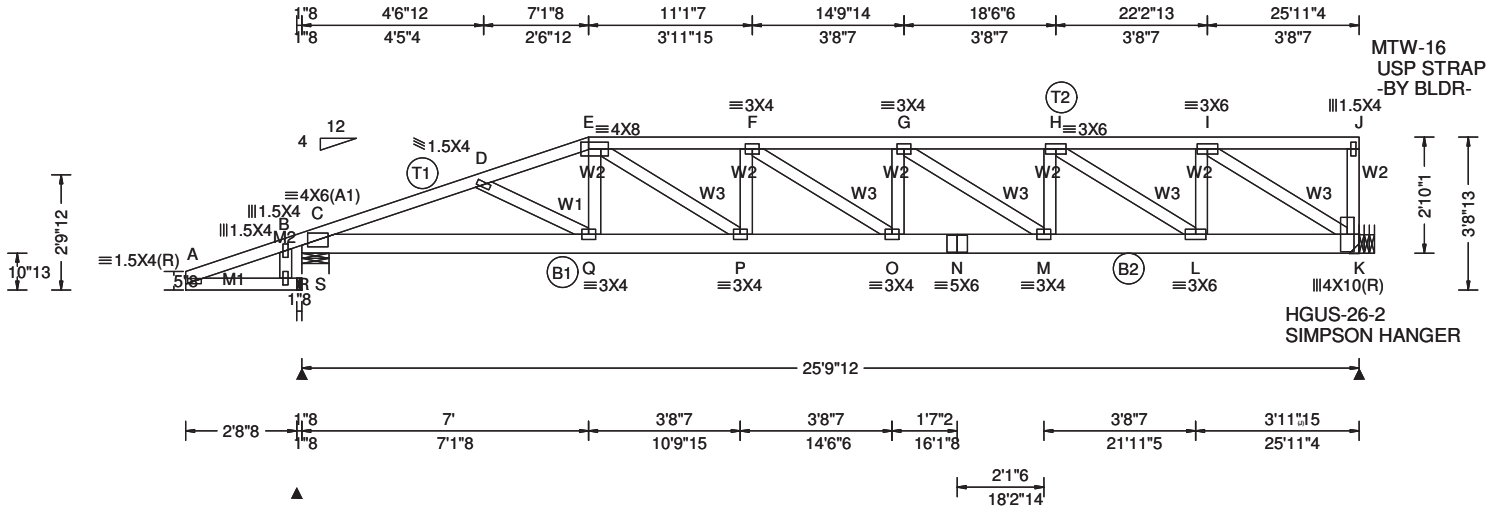

Loading Criteria (psf)

TCLL: 30.00
TCDL: 15.00
BCLL: 0.00
BCDL: 10.00
Des Ld: 55.00
NCBCLL: 0.00
Soffit: 2.00
Load Duration: 1.25
Spacing: 24.0 "

Wind Criteria

Wind Std: ASCE 7-22
Speed: 175 mph
Enclosure: Closed
Risk Category: II
EXP: C Kzt: NA
Mean Height: 15.00 ft
TCDL: 6.0 psf
BCDL: 6.0 psf
MWFRS Parallel Dist: 0 to h/2
C&C Dist a: 3.00 ft
Loc. from endwall: not in 9.00 ft
GCpi: 0.18
Wind Duration: 1.60

Snow Criteria (Pg,Pf in PSF)

Pg: NA Ct: NA CAT: NA
Pf: NA Ce: NA
Lu: NA Cs: NA
Snow Duration: NA

Building Code:
FBC 8th Ed. 2023 Res. HVHZ
TPI Std: 2014
Rep Fac: Varies by Ld Case
FT/RT:20(0)/10(0)
Plate Type(s):
WAVE

Defl/CSI Criteria

PP Deflection in	loc	L/defl	L/#
VERT(LL): 0.221	F	999	360
VERT(CL): 0.377	F	816	240
HORZ(LL): 0.046	K	-	-
HORZ(TL): 0.078	K	-	-

Creep Factor: 2.0
Max TC CSI: 0.560
Max BC CSI: 0.760
Max Web CSI: 0.372
Mfg Specified Camber:

VIEW Ver: 23.02.01A.1204.18

▲ Maximum Reactions (lbs)

Loc	Gravity R+	Gravity / R-	/ Rh	Non-Gravity / Rw	/ U	/ RL
S	-	/-	/240	/-	/-	/86
B	2935	/-	/240	/-	/1360	/86
K	2026	/-	/-	/-	/2359	/-

Wind reactions based on MWFRS
S Brg Wid = 1.5 Min Req = -
B Brg Wid = 8.0 Min Req = 1.7 (Truss)
K Brg Wid = - Min Req = -
Bearing B is a rigid surface.

Maximum Top Chord Forces Per Ply (lbs)

Chords	Tens.	Comp.	Chords	Tens.	Comp.
A - B	140	- 57	F - G	1993	- 3668
B - C	153	- 61	G - H	1877	- 2939
C - D	1579	- 3336	H - I	1470	- 1580
D - E	1542	- 3273	I - J	7	- 5
E - F	1874	- 3745			

Maximum Bot Chord Forces Per Ply (lbs)

Chords	Tens.	Comp.	Chords	Tens.	Comp.
C - Q	3117	- 1473	N - M	3645	- 2005
Q - P	3103	- 1461	M - L	2865	- 1865
P - O	3775	- 1905	L - K	1487	- 1373
O - N	3645	- 2005			

Maximum Web Forces Per Ply (lbs)

Webs	Tens.	Comp.	Webs	Tens.	Comp.
A - R	44	- 118	O - G	196	0
B - R	15	- 3	G - M	158	- 871
R - S	43	- 120	M - H	628	- 103
D - Q	14	- 152	H - L	487	- 1585
E - Q	268	- 15	L - I	790	- 825
E - P	771	- 496	I - K	1640	- 1780
P - F	263	- 250	J - K	39	- 76
F - O	0	- 131			

Lumber

Top chord: 2x4 SP #2;
Bot chord: 2x6 SP #2;
Webs: 2x4 SP #2;
Lt Level Return: 2x4 SP #2;

Nailnote

Nail Schedule:0.128"x3", min. nails
Top Chord: 1 Row @12.00" o.c.
Bot Chord: 1 Row @12.00" o.c.
Webs : 1 Row @ 4" o.c.
Use equal spacing between rows and stagger nails in each row to avoid splitting.

Special Loads

------(Lumber Dur.Fac.=1.25 / Plate Dur.Fac.=1.25)
TC: From 90 plf at -2.83 to 90 plf at 7.00
TC: From 45 plf at 7.00 to 45 plf at 25.81
BC: From 20 plf at 0.00 to 20 plf at 7.01
BC: From 10 plf at 7.01 to 10 plf at 25.81
PLB: From 4 plf at -2.79 to 4 plf at -0.17
TC: 249 lb Conc. Load at 7.01, 9.06,11.06,13.06 15.06,17.06,18.85
TC: 105 lb Conc. Load at 20.85,22.85,24.85
BC: 622 lb Conc. Load at 7.01
BC: 118 lb Conc. Load at 9.06,11.06,13.06,15.06 17.06,18.85
BC: -159 lb Conc. Load at 20.85,22.85,24.85

Wind

Wind loads and reactions based on MWFRS.

Right end vertical not exposed to wind pressure.

Wind loading based on both gable and hip roof types.

Additional Notes

The maximum horizontal reaction is 240#

***** BEARING ANALOG MODIFIED! *****

****WARNING**** READ AND FOLLOW ALL NOTES ON THIS DRAWING!
****IMPORTANT**** FURNISH THIS DRAWING TO ALL CONTRACTORS INCLUDING THE INSTALLERS

Trusses require extreme care in fabricating, handling, shipping, installing and bracing. Refer to and follow the latest edition of BCSI (Building Component Safety Information, by TPI and SBCA) for safety practices prior to performing these functions. Installers shall provide temporary bracing per BCSI. Unless noted otherwise, top chord shall have properly attached structural sheathing and bottom chord shall have a properly attached rigid ceiling. Locations shown for permanent lateral restraint of webs shall have continuous lateral restraint (CLR), installed with diagonal bracing installed on the CLR per BCSI sections B3, B7, or B10, as applicable. Apply plates to each face of truss and position as shown above and on the Joint Details, unless noted otherwise. Refer to drawings 160A-Z for standard plate positions. Refer to job's General Notes page for additional information.

Alpine, a division of ITW Building Components Group Inc. shall not be responsible for any deviation from this drawing, any failure to build the truss in conformance with ANSI/TPI 1, or for handling, shipping, installation and bracing of trusses. A seal on this drawing or cover page listing this drawing, indicates acceptance of professional engineering responsibility solely for the design shown. The suitability and use of this drawing for any structure is the responsibility of the Building Designer per ANSI/TPI 1 Sec.2.

For more information see these web sites: Alpine: alpineitw.com; TPI: tpinst.org; SBCA: sbcacomponents.com; ICC: iccsafe.org; AWC: awc.org

SEQN: 139575 / T24 / HIPM FROM:	Ply: 2 Qty: 1 Wgt: 189.7 lbs	**Job Number:** 24070306 7725 RES. **Truss Label:** 1MH7GP	DRW: ... / ... 07/24/2024

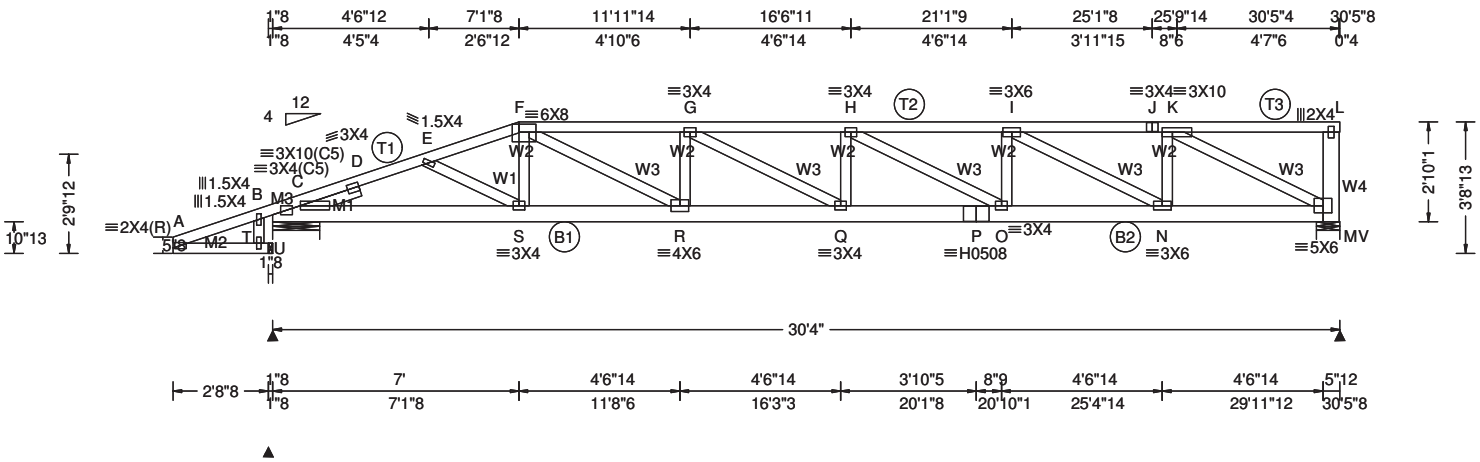

Loading Criteria (psf)

TCLL: 30.00
TCDL: 15.00
BCLL: 0.00
BCDL: 10.00
Des Ld: 55.00
NCBCLL: 0.00
Soffit: 2.00
Load Duration: 1.25
Spacing: 24.0 "

Wind Criteria

Wind Std: ASCE 7-22
Speed: 175 mph
Enclosure: Part. Enc.
Risk Category: II
EXP: C Kzt: NA
Mean Height: 15.00 ft
TCDL: 6.0 psf
BCDL: 6.0 psf
MWFRS Parallel Dist: 0 to h/2
C&C Dist a: 3.03 ft
Loc. from endwall: not in 9.00 ft
GCpi: 0.55
Wind Duration: 1.60

Snow Criteria (Pg,Pf in PSF)

Pg: NA Ct: NA CAT: NA
Pf: NA Ce: NA
Lu: NA Cs: NA
Snow Duration: NA

Building Code:
FBC 8th Ed. 2023 Res. HVHZ
TPI Std: 2014
Rep Fac: No
FT/RT:20(0)/10(0)
Plate Type(s):
WAVE, HS

Defl/CSI Criteria

PP Deflection in	loc	L/defl	L/#
VERT(LL): -0.470	Q	739	360
VERT(CL): 0.533	Q	652	240
HORZ(LL): 0.090	L	-	-
HORZ(TL): 0.115	L	-	-

Creep Factor: 2.0
Max TC CSI: 0.952
Max BC CSI: 0.863
Max Web CSI: 0.673
Mfg Specified Camber:

VIEW Ver: 23.02.01A.1204.18

▲ Maximum Reactions (lbs)

Loc	Gravity R+	Gravity / R-	Gravity / Rh	Non-Gravity / Rw	Non-Gravity / U	Non-Gravity / RL
U	-	/-	/0	/-	/-	/0
B	3443	/-	/-	/-	/3030	/-
V	3120	/-	/-	/-	/2972	/-
C		/-168				

Wind reactions based on MWFRS
U Brg Wid = 1.5 Min Req = -
B Brg Wid = 16.0 Min Req = 1.5 (Truss)
V Brg Wid = 8.0 Min Req = 1.5 (Support)
Bearings B & V are a rigid surface.

Maximum Top Chord Forces Per Ply (lbs)

Chords	Tens.	Comp.	Chords	Tens.	Comp.
A - B	39	- 31	G - H	4447	- 4683
B - C	40	- 31	H - I	3948	- 4151
C - D	2766	- 3093	I - J	2585	- 2711
D - E	2695	- 2904	J - K	2585	- 2711
E - F	2927	- 3131	K - L	40	- 44
F - G	4111	- 4341			

Maximum Bot Chord Forces Per Ply (lbs)

Chords	Tens.	Comp.	Chords	Tens.	Comp.
C - S	5271	- 4890	P - O	4689	- 4446
S - R	2990	- 2797	O - N	4098	- 3891
R - Q	4404	- 4164	N - M	2600	- 2472
Q - P	4689	- 4446			

Maximum Web Forces Per Ply (lbs)

Webs	Tens.	Comp.	Webs	Tens.	Comp.
A - T	6	- 7	Q - H	0	- 56
B - T	3	0	H - O	575	- 621
T - U	0	0	O - I	444	- 478
E - S	440	- 399	I - N	1507	- 1601
F - S	137	- 175	N - K	939	- 964
F - R	1537	- 1492	K - M	2741	- 2881
R - G	453	- 540	M - L	125	- 159
G - Q	323	- 326			

Lumber

Top chord: 2x4 SP #2; T1 2x4 SP #1;
Bot chord: 2x6 SP M-26; B2 2x6 SP #2;
Webs: 2x4 SP #2; W4 2x6 SP #2;
Lt Slider: 2x4 SP #2; block length = 1.750'
Lt Level Return: 2x4 SP #2;

Nailnote

Nail Schedule:0.128"x3", min. nails
Top Chord: 1 Row @11.25" o.c.
Bot Chord: 1 Row @12.00" o.c.
Webs : 1 Row @ 4" o.c.
Use equal spacing between rows and stagger nails in each row to avoid splitting.

Special Loads

------(Lumber Dur.Fac.=1.25 / Plate Dur.Fac.=1.25)

TC: From	90 plf at	-2.83 to	90 plf at	7.00
TC: From	45 plf at	7.00 to	45 plf at	30.33
BC: From	20 plf at	0.00 to	20 plf at	7.01
BC: From	10 plf at	7.01 to	10 plf at	29.85
PLB: From	4 plf at	-2.79 to	4 plf at	-0.17

TC: 230 lb Conc. Load at 7.01, 9.06,11.06,13.06 15.06,17.06,19.06,21.06,23.06,25.06,27.06,29.06
BC: 479 lb Conc. Load at 7.01
BC: 93 lb Conc. Load at 9.06,11.06,13.06,15.06 17.06,19.06,21.06,23.06,25.06,27.06,29.06

Wind

Wind loads and reactions based on MWFRS.

Right end vertical not exposed to wind pressure.

Wind loading based on both gable and hip roof types.

Additional Notes

***** BEARING ANALOG MODIFIED! *****

****WARNING**** READ AND FOLLOW ALL NOTES ON THIS DRAWING!
****IMPORTANT**** FURNISH THIS DRAWING TO ALL CONTRACTORS INCLUDING THE INSTALLERS

Trusses require extreme care in fabricating, handling, shipping, installing and bracing. Refer to and follow the latest edition of BCSI (Building Component Safety Information, by TPI and SBCA) for safety practices prior to performing these functions. Installers shall provide temporary bracing per BCSI. Unless noted otherwise, top chord shall have properly attached structural sheathing and bottom chord shall have a properly attached rigid ceiling. Locations shown for permanent lateral restraint of webs shall have continuous lateral restraint (CLR), installed with diagonal bracing installed on the CLR per BCSI sections B3, B7, or B10, as applicable. Apply plates to each face of truss and position as shown above and on the Joint Details, unless noted otherwise. Refer to drawings 160A-Z for standard plate positions. Refer to job's General Notes page for additional information.

Alpine, a division of ITW Building Components Group Inc. shall not be responsible for any deviation from this drawing, any failure to build the truss in conformance with ANSI/TPI 1, or for handling, shipping, installation and bracing of trusses. A seal on this drawing or cover page listing this drawing, indicates acceptance of professional engineering responsibility solely for the design shown. The suitability and use of this drawing for any structure is the responsibility of the Building Designer per ANSI/TPI 1 Sec.2.

For more information see these web sites: Alpine: alpineitw.com; TPI: tpinst.org; SBCA: sbcacomponents.com; ICC: iccsafe.org; AWC: awc.org

SEQN: 139578 / T84 / HIPM FROM:	Ply: 1 Qty: 1 Wgt: 144.2 lbs	**Job Number:** 24070306 7725 RES. **Truss Label:** 1MH6G	DRW: ... / ... 07/24/2024

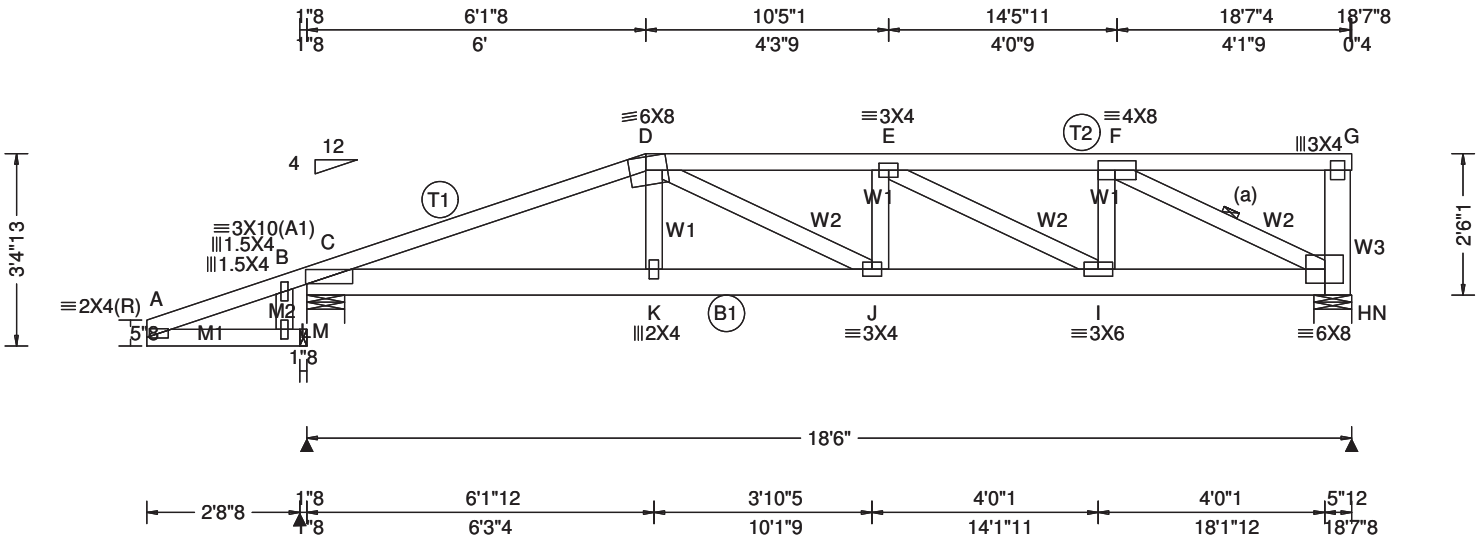

Loading Criteria (psf)

TCLL: 30.00
TCDL: 15.00
BCLL: 0.00
BCDL: 10.00
Des Ld: 55.00
NCBCLL: 10.00
Soffit: 2.00
Load Duration: 1.25
Spacing: 24.0 "

Wind Criteria

Wind Std: ASCE 7-22
Speed: 175 mph
Enclosure: Closed
Risk Category: II
EXP: C Kzt: NA
Mean Height: 15.00 ft
TCDL: 6.0 psf
BCDL: 6.0 psf
MWFRS Parallel Dist: 0 to h/2
C&C Dist a: 3.00 ft
Loc. from endwall: not in 9.00 ft
GCpi: 0.18
Wind Duration: 1.60

Snow Criteria (Pg,Pf in PSF)

Pg: NA Ct: NA CAT: NA
Pf: NA Ce: NA
Lu: NA Cs: NA
Snow Duration: NA

Building Code:
FBC 8th Ed. 2023 Res. HVHZ
TPI Std: 2014
Rep Fac: Varies by Ld Case
FT/RT:20(0)/10(0)
Plate Type(s):
WAVE

Defl/CSI Criteria

PP Deflection in	loc	L/defl	L/#
VERT(LL): 0.156	J	999	360
VERT(CL): 0.282	J	779	240
HORZ(LL): 0.028	H	-	-
HORZ(TL): 0.051	H	-	-

Creep Factor: 2.0
Max TC CSI: 0.791
Max BC CSI: 0.369
Max Web CSI: 0.482
Mfg Specified Camber:

VIEW Ver: 23.02.01A.1204.18

▲ Maximum Reactions (lbs)

Loc	Gravity R+	Gravity / R-	Non-Gravity / Rh	Non-Gravity / Rw	Non-Gravity / U	Non-Gravity / RL
M	-	/-	/243	/-	/-	/110
B	2124	/-	/243	/-	/827	/110
N	2013	/-	/-	/-	/739	/-

Wind reactions based on MWFRS
M Brg Wid = 1.5 Min Req = -
B Brg Wid = 8.0 Min Req = 1.8 (Truss)
N Brg Wid = 8.0 Min Req = 1.5 (Support)
Bearings B & N are a rigid surface.

Maximum Top Chord Forces Per Ply (lbs)

Chords	Tens.	Comp.	Chords	Tens.	Comp.
A - B	283	- 134	D - E	1682	- 4590
B - C	310	- 145	E - F	1216	- 3361
C - D	1646	- 4416	F - G	33	- 75

Maximum Bot Chord Forces Per Ply (lbs)

Chords	Tens.	Comp.	Chords	Tens.	Comp.
C - K	4113	- 1521	J - I	4583	- 1699
K - J	4140	- 1523	I - H	3231	- 1191

Maximum Web Forces Per Ply (lbs)

Webs	Tens.	Comp.	Webs	Tens.	Comp.
A - L	109	- 240	J - E	126	0
B - L	30	- 9	E - I	556	- 1409
L - M	110	- 243	I - F	952	- 180
D - K	393	- 39	F - H	1301	- 3544
D - J	539	- 179	H - G	154	- 257

Lumber

Top chord: 2x4 SP #2;
Bot chord: 2x6 SP M-26;
Webs: 2x4 SP #2; W3 2x6 SP #2;
Lt Level Return: 2x4 SP #2;

Bracing

(a) Continuous lateral restraint equally spaced on member.

Special Loads

------(Lumber Dur.Fac.=1.25 / Plate Dur.Fac.=1.25)

TC: From	90 plf at	-2.83 to	90 plf at	6.00
TC: From	45 plf at	6.00 to	45 plf at	18.50
BC: From	20 plf at	0.00 to	20 plf at	5.96
BC: From	10 plf at	5.96 to	10 plf at	18.02
PLB: From	4 plf at	-2.79 to	4 plf at	-0.17

TC: 217 lb Conc. Load at 5.96
TC: 220 lb Conc. Load at 7.15, 9.15,11.15,13.15 15.15,17.15
BC: 367 lb Conc. Load at 5.96
BC: 106 lb Conc. Load at 7.15, 9.15,11.15,13.15 15.15,17.15

Wind

Wind loads and reactions based on MWFRS.

Right end vertical not exposed to wind pressure.

Wind loading based on both gable and hip roof types.

Additional Notes

The maximum horizontal reaction is 243#

***** BEARING ANALOG MODIFIED! *****

****WARNING**** READ AND FOLLOW ALL NOTES ON THIS DRAWING!
****IMPORTANT**** FURNISH THIS DRAWING TO ALL CONTRACTORS INCLUDING THE INSTALLERS
Trusses require extreme care in fabricating, handling, shipping, installing and bracing. Refer to and follow the latest edition of BCSI (Building Component Safety Information, by TPI and SBCA) for safety practices prior to performing these functions. Installers shall provide temporary bracing per BCSI. Unless noted otherwise, top chord shall have properly attached structural sheathing and bottom chord shall have a properly attached rigid ceiling. Locations shown for permanent lateral restraint of webs shall have continuous lateral restraint (CLR), installed with diagonal bracing installed on the CLR per BCSI sections B3, B7, or B10, as applicable. Apply plates to each face of truss and position as shown above and on the Joint Details, unless noted otherwise. Refer to drawings 160A-Z for standard plate positions. Refer to job's General Notes page for additional information.
Alpine, a division of ITW Building Components Group Inc. shall not be responsible for any deviation from this drawing, any failure to build the truss in conformance with ANSI/TPI 1, or for handling, shipping, installation and bracing of trusses. A seal on this drawing or cover page listing this drawing, indicates acceptance of professional engineering responsibility solely for the design shown. The suitability and use of this drawing for any structure is the responsibility of the Building Designer per ANSI/TPI 1 Sec.2.
For more information see these web sites: Alpine: alpineitw.com; TPI: tpinst.org; SBCA: sbcacomponents.com; ICC: iccsafe.org; AWC: awc.org

SEQN: 206537 / T81 / MONO FROM:	Ply: 1 Qty: 13 Wgt: 128.8 lbs	**Job Number:** 24070306 7725 RES. **Truss Label:** 1M	DRW: ... / ... 07/24/2024

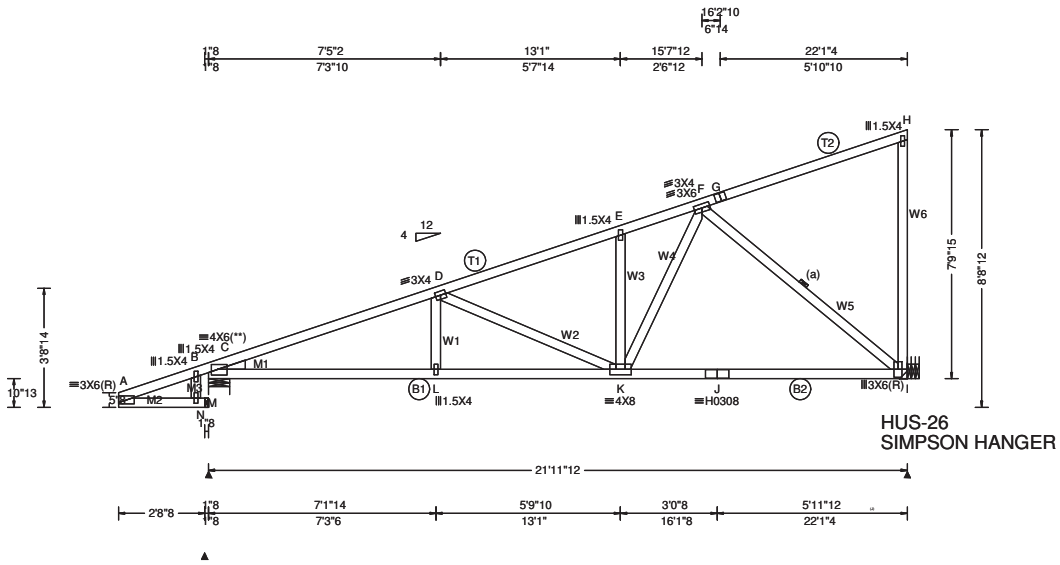

Loading Criteria (psf)

TCLL:	30.00
TCDL:	15.00
BCLL:	0.00
BCDL:	10.00
Des Ld:	55.00
NCBCLL:	10.00
Soffit:	2.00

Load Duration: 1.25
Spacing: 24.0 "

Wind Criteria
Wind Std: ASCE 7-22
Speed: 175 mph
Enclosure: Closed
Risk Category: II
EXP: C Kzt: NA
Mean Height: 15.69 ft
TCDL: 6.0 psf
BCDL: 6.0 psf
MWFRS Parallel Dist: h to 2h
C&C Dist a: 3.00 ft
Loc. from endwall: not in 9.00 ft
GCpi: 0.18
Wind Duration: 1.60

Snow Criteria (Pg,Pf in PSF)
Pg: NA Ct: NA CAT: NA
Pf: NA Ce: NA
Lu: NA Cs: NA
Snow Duration: NA

Building Code:
FBC 8th Ed. 2023 Res. HVHZ
TPI Std: 2014
Rep Fac: Yes
FT/RT:20(0)/10(0)
Plate Type(s):
WAVE, HS

Defl/CSI Criteria

PP Deflection in	loc	L/defl	L/#
VERT(LL): 0.107	D	999	360
VERT(CL): 0.186	D	999	240
HORZ(LL): 0.031	I	-	-
HORZ(TL): 0.055	I	-	-

Creep Factor: 2.0
Max TC CSI: 0.839
Max BC CSI: 0.787
Max Web CSI: 0.596
Mfg Specified Camber:

VIEW Ver: 23.02.01A.1204.18

▲ Maximum Reactions (lbs)

Loc	Gravity R+	/ R-	/ Rh	Non-Gravity / Rw	/ U	/ RL
N	-	/-	/257	/-	/-	/267
B	1498	/-	/257	/961	/599	/434
I	1263	/-	/-	/805	/526	/-

Wind reactions based on C&C
N Brg Wid = 1.5 Min Req = -
B Brg Wid = 8.0 Min Req = 1.8 (Truss)
I Brg Wid = - Min Req = -
Bearing B is a rigid surface.

Maximum Top Chord Forces Per Ply (lbs)

Chords	Tens.	Comp.	Chords	Tens.	Comp.
A - B	294	- 233	E - F	454	- 1639
B - C	323	- 235	F - G	6	- 109
C - D	675	- 2546	G - H	76	- 91
D - E	391	- 1722			

Maximum Bot Chord Forces Per Ply (lbs)

Chords	Tens.	Comp.	Chords	Tens.	Comp.
C - L	2334	- 1020	K - J	1124	- 495
L - K	2332	- 1023	J - I	1124	- 495

Maximum Web Forces Per Ply (lbs)

Webs	Tens.	Comp.	Webs	Tens.	Comp.
A - M	262	- 262	E - K	173	- 258
B - M	55	- 10	K - F	992	- 276
M - N	267	- 263	F - I	642	- 1457
L - D	182	0	H - I	162	- 242
D - K	449	- 863			

Lumber
Top chord: 2x4 SP #2;
Bot chord: 2x4 SP #1;
Webs: 2x4 SP #2;
Lt Wedge: 2x4 SP #2;Lt Level Return: 2x4 SP #2;

Bracing
(a) Continuous lateral restraint equally spaced on member.

Plating Notes
(**) 1 plate(s) require special positioning. Refer to scaled plate plot details for special positioning requirements.

Loading
Truss passed check for 20 psf additional bottom chord live load in areas with 42"-high x 24"-wide clearance.

Wind
Member design based on both MWFRS and C&C.
Right end vertical not exposed to wind pressure.
Wind loading based on both gable and hip roof types.
Left bottom chord exposed to wind.

Additional Notes
The maximum horizontal reaction is 257#
***** BEARING ANALOG MODIFIED! *****

****WARNING**** READ AND FOLLOW ALL NOTES ON THIS DRAWING!
****IMPORTANT**** FURNISH THIS DRAWING TO ALL CONTRACTORS INCLUDING THE INSTALLERS
Trusses require extreme care in fabricating, handling, shipping, installing and bracing. Refer to and follow the latest edition of BCSI (Building Component Safety Information, by TPI and SBCA) for safety practices prior to performing these functions. Installers shall provide temporary bracing per BCSI. Unless noted otherwise, top chord shall have properly attached structural sheathing and bottom chord shall have a properly attached rigid ceiling. Locations shown for permanent lateral restraint of webs shall have continuous lateral restraint (CLR), installed with diagonal bracing installed on the CLR per BCSI sections B3, B7, or B10, as applicable. Apply plates to each face of truss and position as shown above and on the Joint Details, unless noted otherwise. Refer to drawings 160A-Z for standard plate positions. Refer to job's General Notes page for additional information.
Alpine, a division of ITW Building Components Group Inc. shall not be responsible for any deviation from this drawing, any failure to build the truss in conformance with ANSI/TPI 1, or for handling, shipping, installation and bracing of trusses. A seal on this drawing or cover page listing this drawing, indicates acceptance of professional engineering responsibility solely for the design shown. The suitability and use of this drawing for any structure is the responsibility of the Building Designer per ANSI/TPI 1 Sec.2.
For more information see these web sites: Alpine: alpineitw.com; TPI: tpinst.org; SBCA: sbcacomponents.com; ICC: iccsafe.org; AWC: awc.org

SEQN: 206540 / T102 / MONO FROM:	Ply: 1 Qty: 2 Wgt: 117.6 lbs	**Job Number:** 24070306 7725 RES. **Truss Label:** 1MA	DRW: ... / ... 07/24/2024

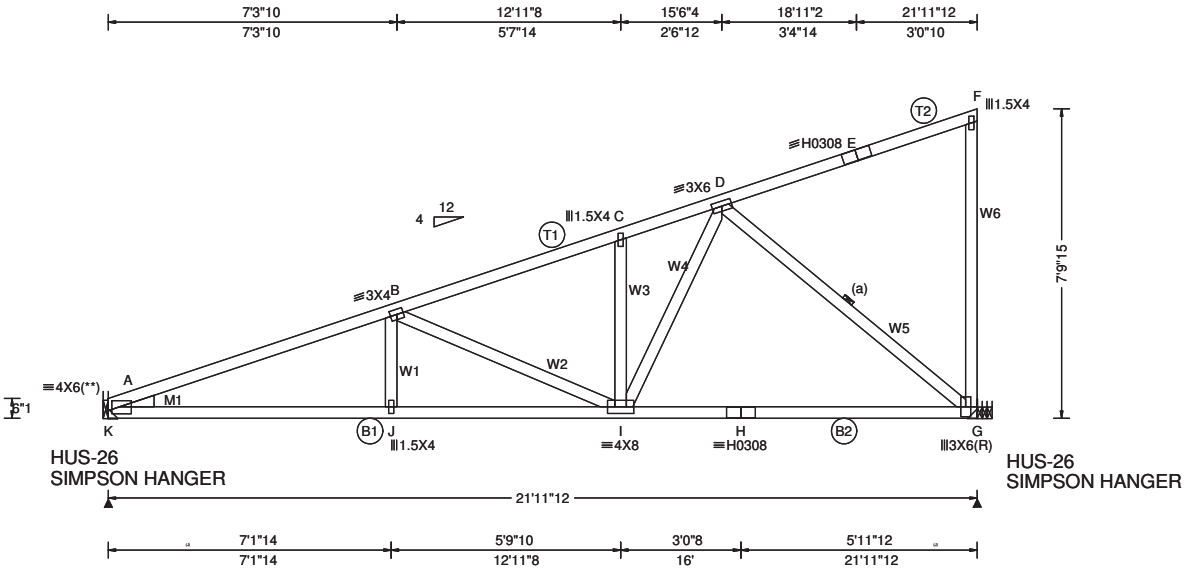

Loading Criteria (psf)

TCLL:	30.00
TCDL:	15.00
BCLL:	0.00
BCDL:	10.00
Des Ld:	55.00
NCBCLL:	10.00
Soffit:	2.00

Load Duration: 1.25
Spacing: 24.0 "

Wind Criteria
Wind Std: ASCE 7-22
Speed: 175 mph
Enclosure: Closed
Risk Category: II
EXP: C Kzt: NA
Mean Height: 16.17 ft
TCDL: 6.0 psf
BCDL: 6.0 psf
MWFRS Parallel Dist: > 2h
C&C Dist a: 3.00 ft
Loc. from endwall: not in 9.00 ft
GCpi: 0.18
Wind Duration: 1.60

Snow Criteria (Pg,Pf in PSF)
Pg: NA Ct: NA CAT: NA
Pf: NA Ce: NA
Lu: NA Cs: NA
Snow Duration: NA

Building Code:
FBC 8th Ed. 2023 Res. HVHZ
TPI Std: 2014
Rep Fac: Yes
FT/RT:20(0)/10(0)
Plate Type(s):
WAVE, HS

Defl/CSI Criteria

PP Deflection in	loc	L/defl	L/#
VERT(LL): 0.102	B	999	360
VERT(CL): 0.181	B	999	240
HORZ(LL): 0.030	G	-	-
HORZ(TL): 0.054	G	-	-

Creep Factor: 2.0
Max TC CSI: 0.874
Max BC CSI: 0.786
Max Web CSI: 0.622
Mfg Specified Camber:

VIEW Ver: 23.02.01A.1204.18

▲ Maximum Reactions (lbs)

Loc	Gravity R+	Gravity / R-	/ Rh	Non-Gravity / Rw	/ U	/ RL
K	1240	/-	/-	/765	/370	/482
G	1268	/-	/-	/808	/535	/-

Wind reactions based on C&C
K Brg Wid = - Min Req = -
G Brg Wid = - Min Req = -

Maximum Top Chord Forces Per Ply (lbs)

Chords	Tens.	Comp.	Chords	Tens.	Comp.
A - B	714	-2588	D - E	17	-109
B - C	403	-1732	E - F	76	-63
C - D	464	-1646			

Maximum Bot Chord Forces Per Ply (lbs)

Chords	Tens.	Comp.	Chords	Tens.	Comp.
A - J	2377	-1061	I - H	1133	-506
J - I	2374	-1063	H - G	1133	-506

Maximum Web Forces Per Ply (lbs)

Webs	Tens.	Comp.	Webs	Tens.	Comp.
J - B	194	0	I - D	993	-280
B - I	480	-900	D - G	656	-1468
C - I	164	-245	F - G	162	-240

Lumber
Top chord: 2x4 SP #2;
Bot chord: 2x4 SP #1;
Webs: 2x4 SP #2;
Lt Wedge: 2x4 SP #2;

Bracing
(a) Continuous lateral restraint equally spaced on member.

Plating Notes
(**) 1 plate(s) require special positioning. Refer to scaled plate plot details for special positioning requirements.

Hangers / Ties
(J) Hanger Support Required, by others

Loading
Truss passed check for 20 psf additional bottom chord live load in areas with 42"-high x 24"-wide clearance.

Wind
Member design based on both MWFRS and C&C.
Right end vertical not exposed to wind pressure.
Wind loading based on both gable and hip roof types.

****WARNING**** READ AND FOLLOW ALL NOTES ON THIS DRAWING!
****IMPORTANT**** FURNISH THIS DRAWING TO ALL CONTRACTORS INCLUDING THE INSTALLERS
Trusses require extreme care in fabricating, handling, shipping, installing and bracing. Refer to and follow the latest edition of BCSI (Building Component Safety Information, by TPI and SBCA) for safety practices prior to performing these functions. Installers shall provide temporary bracing per BCSI. Unless noted otherwise, top chord shall have properly attached structural sheathing and bottom chord shall have a properly attached rigid ceiling. Locations shown for permanent lateral restraint of webs shall have continuous lateral restraint (CLR), installed with diagonal bracing installed on the CLR per BCSI sections B3, B7, or B10, as applicable. Apply plates to each face of truss and position as shown above and on the Joint Details, unless noted otherwise. Refer to drawings 160A-Z for standard plate positions. Refer to job's General Notes page for additional information.
Alpine, a division of ITW Building Components Group Inc. shall not be responsible for any deviation from this drawing, any failure to build the truss in conformance with ANSI/TPI 1, or for handling, shipping, installation and bracing of trusses. A seal on this drawing or cover page listing this drawing, indicates acceptance of professional engineering responsibility solely for the design shown. The suitability and use of this drawing for any structure is the responsibility of the Building Designer per ANSI/TPI 1 Sec.2.
For more information see these web sites: Alpine: alpineitw.com; TPI: tpinst.org; SBCA: sbcacomponents.com; ICC: iccsafe.org; AWC: awc.org

SEQN: 206546 / T114 / COMN FROM:	Ply: 1 Qty: 3 Wgt: 208.6 lbs	**Job Number:** 24070306 7725 RES. **Truss Label:** 2T	DRW: ... / ... 07/24/2024

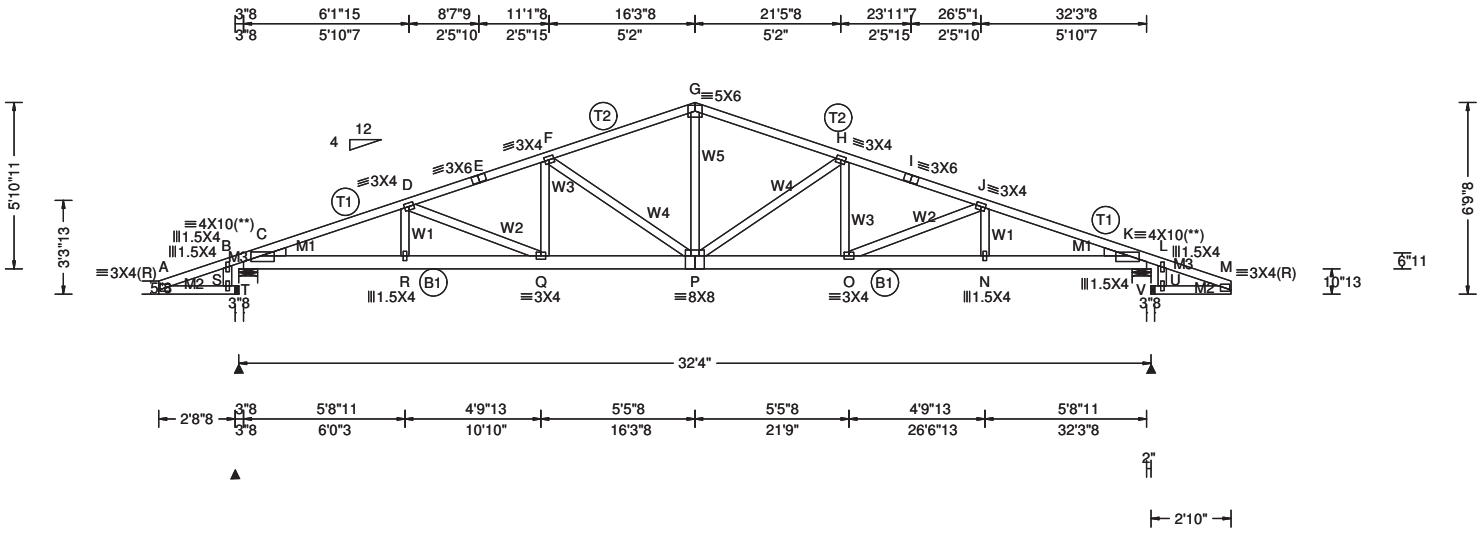

Loading Criteria (psf)

TCLL:	30.00
TCDL:	15.00
BCLL:	0.00
BCDL:	10.00
Des Ld:	55.00
NCBCLL:	10.00
Soffit:	2.00

Load Duration: 1.25
Spacing: 24.0 "

Wind Criteria
Wind Std: ASCE 7-22
Speed: 175 mph
Enclosure: Closed
Risk Category: II
EXP: C Kzt: NA
Mean Height: 23.23 ft
TCDL: 6.0 psf
BCDL: 6.0 psf
MWFRS Parallel Dist: h/2 to h
C&C Dist a: 3.23 ft
Loc. from endwall: not in 9.00 ft
GCpi: 0.18
Wind Duration: 1.60

Snow Criteria (Pg,Pf in PSF)
Pg: NA Ct: NA CAT: NA
Pf: NA Ce: NA
Lu: NA Cs: NA
Snow Duration: NA

Building Code:
FBC 8th Ed. 2023 Res. HVHZ
TPI Std: 2014
Rep Fac: Yes
FT/RT:20(0)/10(0)
Plate Type(s):
WAVE

Defl/CSI Criteria

PP Deflection in	loc	L/defl	L/#
VERT(LL): 0.252	P	999	360
VERT(CL): 0.451	P	843	240
HORZ(LL): 0.060	K	-	-
HORZ(TL): 0.108	K	-	-

Creep Factor: 2.0
Max TC CSI: 0.923
Max BC CSI: 0.869
Max Web CSI: 0.676
Mfg Specified Camber:

VIEW Ver: 23.02.01A.1204.18

▲ Maximum Reactions (lbs)

Loc	Gravity R+	Gravity / R-	Gravity / Rh	Non-Gravity / Rw	Non-Gravity / U	Non-Gravity / RL
T	-	/-	/254	/-	/-	/289
B	2019	/-	/269	/1342	/723	/309
L	2034	/-	/-	/1315	/718	/-
U	-	/-	/61	/-	/-	/448

Wind reactions based on C&C
T Brg Wid = 1.5 Min Req = -
B Brg Wid = 8.0 Min Req = 2.4 (Truss)
L Brg Wid = 8.0 Min Req = 2.4 (Truss)
U Brg Wid = 1.5 Min Req = -
Bearings B & K are a rigid surface.

Maximum Top Chord Forces Per Ply (lbs)

Chords	Tens.	Comp.	Chords	Tens.	Comp.
A - B	292	- 200	G - H	1105	- 2709
B - C	325	- 201	H - I	1347	- 3440
C - D	1458	- 3948	I - J	1337	- 3511
D - E	1342	- 3535	J - K	1435	- 3831
E - F	1351	- 3463	K - L	519	- 426
F - G	1105	- 2709	L - M	456	- 389

Maximum Bot Chord Forces Per Ply (lbs)

Chords	Tens.	Comp.	Chords	Tens.	Comp.
C - R	3706	- 1211	P - O	3274	- 1002
R - Q	3710	- 1217	O - N	3599	- 1194
Q - P	3294	- 1006	N - K	3592	- 1188

Maximum Web Forces Per Ply (lbs)

Webs	Tens.	Comp.	Webs	Tens.	Comp.
A - S	225	- 285	P - H	420	- 929
B - S	57	- 6	H - O	343	- 45
S - T	231	- 289	O - J	208	- 335
R - D	113	- 99	J - N	131	- 146
D - Q	227	- 432	U - V	414	- 448
Q - F	354	- 50	V - L	163	- 115
F - P	425	- 954	V - M	412	- 453
G - P	1208	- 428			

Lumber

Top chord: 2x4 SP #2;
Bot chord: 2x6 SP #2;
Webs: 2x4 SP #2;
Lt Wedge: 2x4 SP #2;Rt Wedge: 2x4 SP #2;
Lt Level Return: 2x4 SP #2;
Rt Level Return: 2x4 SP #2;

Plating Notes

(**) 2 plate(s) require special positioning. Refer to scaled plate plot details for special positioning requirements.

Wind

Member design based on both MWFRS and C&C.

Wind loading based on both gable and hip roof types.

Additional Notes

The maximum horizontal reaction is 269#

***** BEARING ANALOG MODIFIED! *****

****WARNING**** READ AND FOLLOW ALL NOTES ON THIS DRAWING!
****IMPORTANT**** FURNISH THIS DRAWING TO ALL CONTRACTORS INCLUDING THE INSTALLERS
Trusses require extreme care in fabricating, handling, shipping, installing and bracing. Refer to and follow the latest edition of BCSI (Building Component Safety Information, by TPI and SBCA) for safety practices prior to performing these functions. Installers shall provide temporary bracing per BCSI. Unless noted otherwise, top chord shall have properly attached structural sheathing and bottom chord shall have a properly attached rigid ceiling. Locations shown for permanent lateral restraint of webs shall have continuous lateral restraint (CLR), installed with diagonal bracing installed on the CLR per BCSI sections B3, B7, or B10, as applicable. Apply plates to each face of truss and position as shown above and on the Joint Details, unless noted otherwise. Refer to drawings 160A-Z for standard plate positions. Refer to job's General Notes page for additional information.
Alpine, a division of ITW Building Components Group Inc. shall not be responsible for any deviation from this drawing, any failure to build the truss in conformance with ANSI/TPI 1, or for handling, shipping, installation and bracing of trusses. A seal on this drawing or cover page listing this drawing, indicates acceptance of professional engineering responsibility solely for the design shown. The suitability and use of this drawing for any structure is the responsibility of the Building Designer per ANSI/TPI 1 Sec.2.
For more information see these web sites: Alpine: alpineitw.com; TPI: tpinst.org; SBCA: sbcacomponents.com; ICC: iccsafe.org; AWC: awc.org

SEQN: 206549 / T112 / HIPS FROM:	Ply: 1 Qty: 2 Wgt: 210.0 lbs	**Job Number:** 24070306 7725 RES. **Truss Label:** 2H15	DRW: ... / ... 07/24/2024

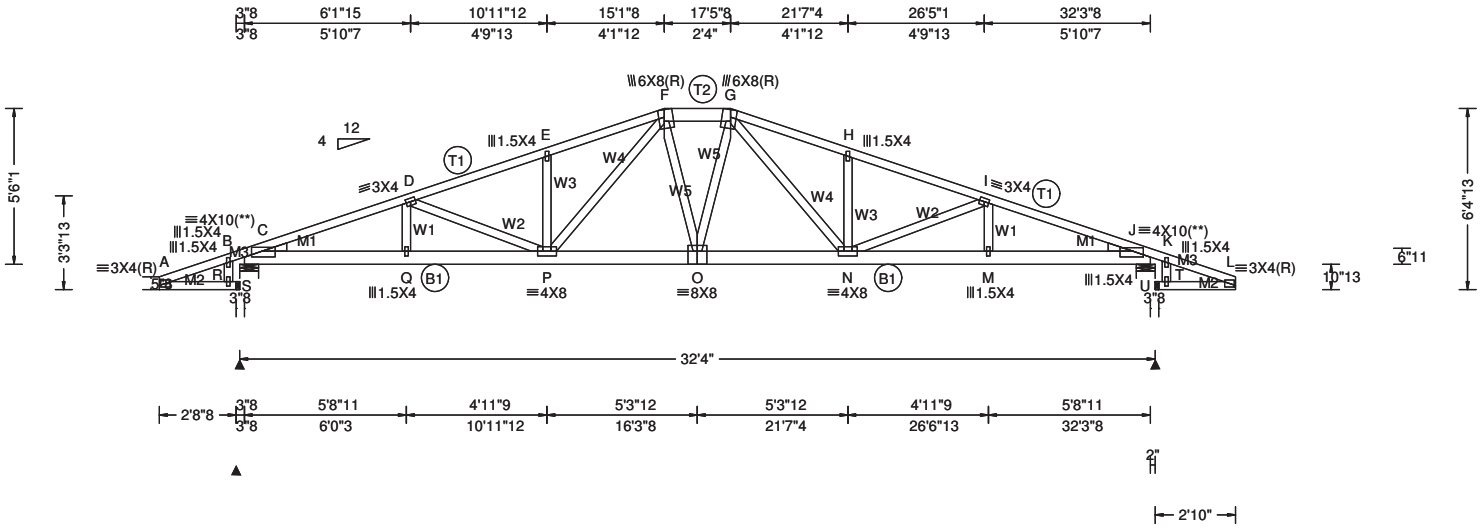

Loading Criteria (psf)

TCLL:	30.00
TCDL:	15.00
BCLL:	0.00
BCDL:	10.00
Des Ld:	55.00
NCBCLL:	10.00
Soffit:	2.00

Load Duration: 1.25
Spacing: 24.0 "

Wind Criteria
Wind Std: ASCE 7-22
Speed: 175 mph
Enclosure: Closed
Risk Category: II
EXP: C Kzt: NA
Mean Height: 23.03 ft
TCDL: 6.0 psf
BCDL: 6.0 psf
MWFRS Parallel Dist: h/2 to h
C&C Dist a: 3.23 ft
Loc. from endwall: not in 9.00 ft
GCpi: 0.18
Wind Duration: 1.60

Snow Criteria (Pg,Pf in PSF)
Pg: NA Ct: NA CAT: NA
Pf: NA Ce: NA
Lu: NA Cs: NA
Snow Duration: NA

Building Code:
FBC 8th Ed. 2023 Res. HVHZ
TPI Std: 2014
Rep Fac: Yes
FT/RT:20(0)/10(0)
Plate Type(s):
WAVE

Defl/CSI Criteria

PP Deflection in	loc	L/defl	L/#
VERT(LL): 0.247	O	999	360
VERT(CL): 0.442	O	861	240
HORZ(LL): 0.057	J	-	-
HORZ(TL): 0.102	J	-	-

Creep Factor: 2.0
Max TC CSI: 0.907
Max BC CSI: 0.869
Max Web CSI: 0.293
Mfg Specified Camber:

VIEW Ver: 23.02.01A.1204.18

▲ Maximum Reactions (lbs)

Loc	Gravity R+	Gravity / R-	Gravity / Rh	Non-Gravity / Rw	Non-Gravity / U	Non-Gravity / RL
S	-	/-	/255	/-	/-	/289
B	2019	/-	/264	/1197	/748	/308
K	2033	/-	/-	/1169	/751	/-
T	-	/-	/54	/-	/-	/446

Wind reactions based on C&C
S Brg Wid = 1.5 Min Req = -
B Brg Wid = 8.0 Min Req = 2.4 (Truss)
K Brg Wid = 8.0 Min Req = 2.4 (Truss)
T Brg Wid = 1.5 Min Req = -
Bearings B & J are a rigid surface.

Maximum Top Chord Forces Per Ply (lbs)

Chords	Tens.	Comp.	Chords	Tens.	Comp.
A - B	292	- 197	G - H	1439	- 3480
B - C	325	- 197	H - I	1340	- 3495
C - D	1461	- 3952	I - J	1439	- 3840
D - E	1344	- 3517	J - K	518	- 422
E - F	1443	- 3500	K - L	454	- 386
F - G	1191	- 2685			

Maximum Bot Chord Forces Per Ply (lbs)

Chords	Tens.	Comp.	Chords	Tens.	Comp.
C - Q	3720	- 1294	O - N	2703	- 984
Q - P	3724	- 1300	N - M	3618	- 1203
P - O	2707	- 1019	M - J	3611	- 1198

Maximum Web Forces Per Ply (lbs)

Webs	Tens.	Comp.	Webs	Tens.	Comp.
A - R	222	- 285	O - G	183	- 95
B - R	57	- 6	G - N	919	- 395
R - S	228	- 289	N - H	268	- 404
Q - D	125	- 91	N - I	219	- 359
D - P	237	- 453	I - M	146	- 134
E - P	267	- 401	T - U	410	- 446
P - F	944	- 400	U - K	163	- 114
F - O	177	- 96	U - L	409	- 451

Lumber

Top chord: 2x4 SP #2; T2 2x6 SP #2;
Bot chord: 2x6 SP #2;
Webs: 2x4 SP #2;
Lt Wedge: 2x4 SP #2;Rt Wedge: 2x4 SP #2;
Lt Level Return: 2x4 SP #2;
Rt Level Return: 2x4 SP #2;

Plating Notes

(**) 2 plate(s) require special positioning. Refer to scaled plate plot details for special positioning requirements.

Wind

Member design based on both MWFRS and C&C.

Wind loading based on both gable and hip roof types.

Additional Notes

The maximum horizontal reaction is 264#

***** BEARING ANALOG MODIFIED! *****

****WARNING**** READ AND FOLLOW ALL NOTES ON THIS DRAWING!
****IMPORTANT**** FURNISH THIS DRAWING TO ALL CONTRACTORS INCLUDING THE INSTALLERS
Trusses require extreme care in fabricating, handling, shipping, installing and bracing. Refer to and follow the latest edition of BCSI (Building Component Safety Information, by TPI and SBCA) for safety practices prior to performing these functions. Installers shall provide temporary bracing per BCSI. Unless noted otherwise, top chord shall have properly attached structural sheathing and bottom chord shall have a properly attached rigid ceiling. Locations shown for permanent lateral restraint of webs shall have continuous lateral restraint (CLR), installed with diagonal bracing installed on the CLR per BCSI sections B3, B7, or B10, as applicable. Apply plates to each face of truss and position as shown above and on the Joint Details, unless noted otherwise. Refer to drawings 160A-Z for standard plate positions. Refer to job's General Notes page for additional information.
Alpine, a division of ITW Building Components Group Inc. shall not be responsible for any deviation from this drawing, any failure to build the truss in conformance with ANSI/TPI 1, or for handling, shipping, installation and bracing of trusses. A seal on this drawing or cover page listing this drawing, indicates acceptance of professional engineering responsibility solely for the design shown. The suitability and use of this drawing for any structure is the responsibility of the Building Designer per ANSI/TPI 1 Sec.2.
For more information see these web sites: Alpine: alpineitw.com; TPI: tpinst.org; SBCA: sbcacomponents.com; ICC: iccsafe.org; AWC: awc.org

SEQN: 206552 / T110 / HIPS FROM:	Ply: 1 Qty: 2 Wgt: 212.8 lbs	**Job Number:** 24070306 7725 RES. **Truss Label:** 2H13	DRW: ... / ... 07/24/2024

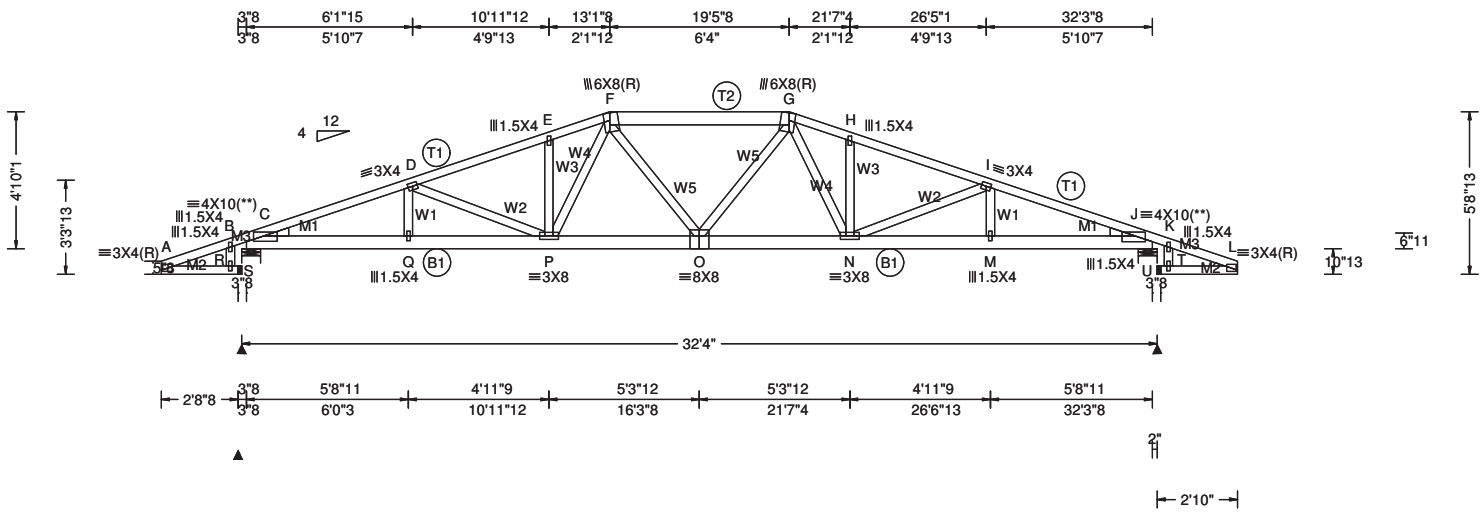

Loading Criteria (psf)

TCLL:	30.00
TCDL:	15.00
BCLL:	0.00
BCDL:	10.00
Des Ld:	55.00
NCBCLL:	10.00
Soffit:	2.00

Load Duration: 1.25
Spacing: 24.0 "

Wind Criteria
Wind Std: ASCE 7-22
Speed: 175 mph
Enclosure: Closed
Risk Category: II
EXP: C Kzt: NA
Mean Height: 22.70 ft
TCDL: 6.0 psf
BCDL: 6.0 psf
MWFRS Parallel Dist: h/2 to h
C&C Dist a: 3.23 ft
Loc. from endwall: not in 9.00 ft
GCpi: 0.18
Wind Duration: 1.60

Snow Criteria (Pg,Pf in PSF)
Pg: NA Ct: NA CAT: NA
Pf: NA Ce: NA
Lu: NA Cs: NA
Snow Duration: NA

Building Code:
FBC 8th Ed. 2023 Res. HVHZ
TPI Std: 2014
Rep Fac: Yes
FT/RT:20(0)/10(0)
Plate Type(s):
WAVE

Defl/CSI Criteria

PP Deflection in	loc	L/defl	L/#
VERT(LL): 0.244	O	999	360
VERT(CL): 0.437	O	870	240
HORZ(LL): 0.059	J	-	-
HORZ(TL): 0.105	J	-	-

Creep Factor: 2.0
Max TC CSI: 0.910
Max BC CSI: 0.873
Max Web CSI: 0.226
Mfg Specified Camber:

VIEW Ver: 23.02.01A.1204.18

▲ Maximum Reactions (lbs)

Loc	Gravity R+	Gravity / R-	Gravity / Rh	Non-Gravity / Rw	Non-Gravity / U	Non-Gravity / RL
S	-	/-	/256	/-	/-	/289
B	2019	/-	/267	/1064	/894	/306
K	2033	/-	/-	/1159	/899	/-
T	-	/-	/56	/-	/-	/441

Wind reactions based on C&C
S Brg Wid = 1.5 Min Req = -
B Brg Wid = 8.0 Min Req = 2.4 (Truss)
K Brg Wid = 8.0 Min Req = 2.4 (Truss)
T Brg Wid = 1.5 Min Req = -
Bearings B & J are a rigid surface.

Maximum Top Chord Forces Per Ply (lbs)

Chords	Tens.	Comp.	Chords	Tens.	Comp.
A - B	293	- 193	G - H	1865	- 3435
B - C	327	- 193	H - I	1806	- 3494
C - D	1777	- 3954	I - J	1762	- 3839
D - E	1805	- 3516	J - K	513	- 415
E - F	1863	- 3455	K - L	450	- 380
F - G	1689	- 3001			

Maximum Bot Chord Forces Per Ply (lbs)

Chords	Tens.	Comp.	Chords	Tens.	Comp.
C - Q	3720	- 1687	O - N	2993	- 1488
Q - P	3724	- 1695	N - M	3615	- 1534
P - O	3003	- 1561	M - J	3608	- 1526

Maximum Web Forces Per Ply (lbs)

Webs	Tens.	Comp.	Webs	Tens.	Comp.
A - R	218	- 285	O - G	165	- 62
B - R	57	- 5	G - N	653	- 257
R - S	223	- 289	N - H	181	- 260
Q - D	157	- 100	N - I	225	- 426
D - P	244	- 462	I - M	182	- 144
E - P	180	- 256	T - U	403	- 441
P - F	674	- 261	U - K	162	- 113
F - O	158	- 64	U - L	402	- 447

Lumber

Top chord: 2x4 SP #2; T2 2x6 SP #2;
Bot chord: 2x6 SP #2;
Webs: 2x4 SP #2;
Lt Wedge: 2x4 SP #2;Rt Wedge: 2x4 SP #2;
Lt Level Return: 2x4 SP #2;
Rt Level Return: 2x4 SP #2;

Plating Notes

(**) 2 plate(s) require special positioning. Refer to scaled plate plot details for special positioning requirements.

Wind

Member design based on both MWFRS and C&C.

Wind loading based on both gable and hip roof types.

Additional Notes

The maximum horizontal reaction is 267#

***** BEARING ANALOG MODIFIED! *****

****WARNING**** READ AND FOLLOW ALL NOTES ON THIS DRAWING!
****IMPORTANT**** FURNISH THIS DRAWING TO ALL CONTRACTORS INCLUDING THE INSTALLERS

Trusses require extreme care in fabricating, handling, shipping, installing and bracing. Refer to and follow the latest edition of BCSI (Building Component Safety Information, by TPI and SBCA) for safety practices prior to performing these functions. Installers shall provide temporary bracing per BCSI. Unless noted otherwise, top chord shall have properly attached structural sheathing and bottom chord shall have a properly attached rigid ceiling. Locations shown for permanent lateral restraint of webs shall have continuous lateral restraint (CLR), installed with diagonal bracing installed on the CLR per BCSI sections B3, B7, or B10, as applicable. Apply plates to each face of truss and position as shown above and on the Joint Details, unless noted otherwise. Refer to drawings 160A-Z for standard plate positions. Refer to job's General Notes page for additional information.

Alpine, a division of ITW Building Components Group Inc. shall not be responsible for any deviation from this drawing, any failure to build the truss in conformance with ANSI/TPI 1, or for handling, shipping, installation and bracing of trusses. A seal on this drawing or cover page listing this drawing, indicates acceptance of professional engineering responsibility solely for the design shown. The suitability and use of this drawing for any structure is the responsibility of the Building Designer per ANSI/TPI 1 Sec.2.

For more information see these web sites: Alpine: alpineitw.com; TPI: tpinst.org; SBCA: sbcacomponents.com; ICC: iccsafe.org; AWC: awc.org

SEQN: 206561 / T99 / HIPS FROM:	Ply: 1 Qty: 1 Wgt: 203.0 lbs	**Job Number:** 24070306 7725 RES. **Truss Label:** 2H11	DRW: ... / ... 07/24/2024

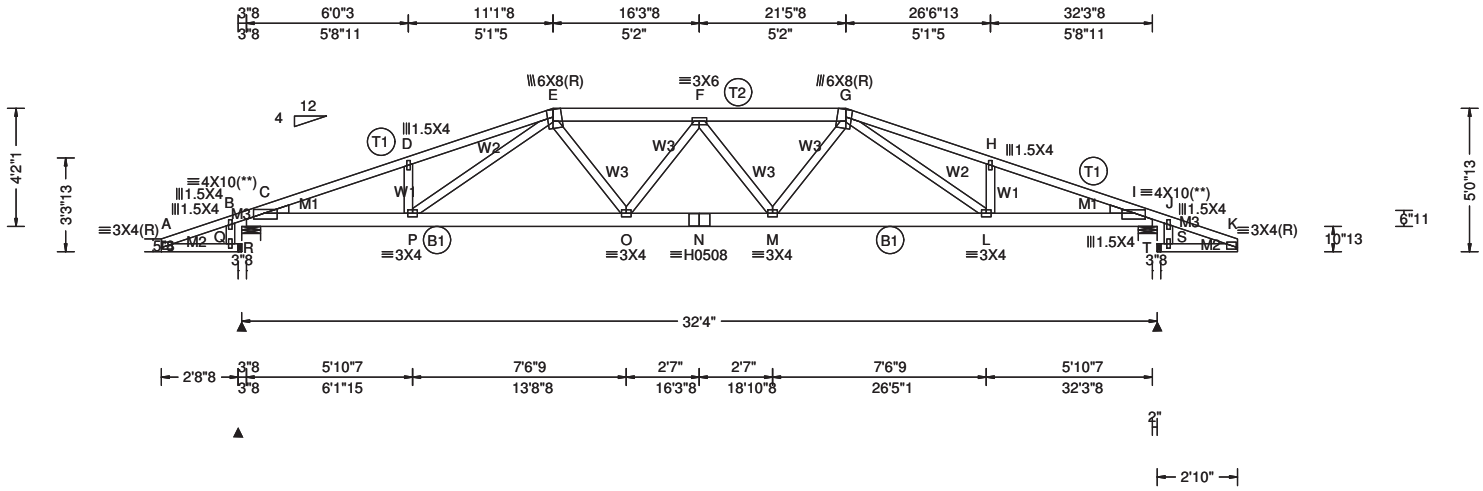

Loading Criteria (psf)

TCLL:	30.00
TCDL:	15.00
BCLL:	0.00
BCDL:	10.00
Des Ld:	55.00
NCBCLL:	10.00
Soffit:	2.00

Load Duration: 1.25
Spacing: 24.0 "

Wind Criteria
Wind Std: ASCE 7-22
Speed: 175 mph
Enclosure: Closed
Risk Category: II
EXP: C Kzt: NA
Mean Height: 22.37 ft
TCDL: 6.0 psf
BCDL: 6.0 psf
MWFRS Parallel Dist: h to 2h
C&C Dist a: 3.23 ft
Loc. from endwall: not in 9.00 ft
GCpi: 0.18
Wind Duration: 1.60

Snow Criteria (Pg,Pf in PSF)
Pg: NA Ct: NA CAT: NA
Pf: NA Ce: NA
Lu: NA Cs: NA
Snow Duration: NA

Building Code:
FBC 8th Ed. 2023 Res. HVHZ
TPI Std: 2014
Rep Fac: Yes
FT/RT:20(0)/10(0)
Plate Type(s):
WAVE, HS

Defl/CSI Criteria

PP Deflection in	loc	L/defl	L/#
VERT(LL): 0.262	F	999	360
VERT(CL): 0.469	F	811	240
HORZ(LL): 0.060	I	-	-
HORZ(TL): 0.107	I	-	-

Creep Factor: 2.0
Max TC CSI: 0.928
Max BC CSI: 0.891
Max Web CSI: 0.146
Mfg Specified Camber:

VIEW Ver: 23.02.01A.1204.18

▲ Maximum Reactions (lbs)

Loc	Gravity R+	Gravity / R-	Gravity / Rh	Non-Gravity / Rw	Non-Gravity / U	Non-Gravity / RL
R	-	/-	/256	/-	/-	/290
B	2019	/-	/268	/1080	/1039	/297
J	2034	/-	/-	/1176	/1046	/-
S	-	/-	/57	/-	/-	/438

Wind reactions based on C&C
R Brg Wid = 1.5 Min Req = -
B Brg Wid = 8.0 Min Req = 2.4 (Truss)
J Brg Wid = 8.0 Min Req = 2.4 (Truss)
S Brg Wid = 1.5 Min Req = -
Bearings B & I are a rigid surface.

Maximum Top Chord Forces Per Ply (lbs)

Chords	Tens.	Comp.	Chords	Tens.	Comp.
A - B	293	- 188	F - G	2418	- 3529
B - C	327	- 188	G - H	2258	- 3830
C - D	2220	- 3985	H - I	2193	- 3876
D - E	2286	- 3942	I - J	509	- 401
E - F	2413	- 3536	J - K	447	- 368

Maximum Bot Chord Forces Per Ply (lbs)

Chords	Tens.	Comp.	Chords	Tens.	Comp.
C - P	3745	- 2074	N - M	3728	- 2432
P - O	3282	- 2062	M - L	3258	- 1929
O - N	3728	- 2432	L - I	3639	- 1877

Maximum Web Forces Per Ply (lbs)

Webs	Tens.	Comp.	Webs	Tens.	Comp.
A - Q	213	- 287	F - M	471	- 306
B - Q	57	- 5	M - G	521	- 412
Q - R	218	- 290	G - L	651	- 205
D - P	209	- 353	L - H	208	- 342
P - E	652	- 211	S - T	389	- 438
E - O	496	- 399	T - J	162	- 112
O - F	466	- 294	T - K	389	- 443

Lumber

Top chord: 2x4 SP #2; T2 2x6 SP #2;
Bot chord: 2x6 SP #2;
Webs: 2x4 SP #2;
Lt Wedge: 2x4 SP #2;Rt Wedge: 2x4 SP #2;
Lt Level Return: 2x4 SP #2;
Rt Level Return: 2x4 SP #2;

Plating Notes

(**) 2 plate(s) require special positioning. Refer to scaled plate plot details for special positioning requirements.

Wind

Member design based on both MWFRS and C&C.

Wind loading based on both gable and hip roof types.

Additional Notes

The maximum horizontal reaction is 268#

***** BEARING ANALOG MODIFIED! *****

****WARNING**** READ AND FOLLOW ALL NOTES ON THIS DRAWING!
****IMPORTANT**** FURNISH THIS DRAWING TO ALL CONTRACTORS INCLUDING THE INSTALLERS

Trusses require extreme care in fabricating, handling, shipping, installing and bracing. Refer to and follow the latest edition of BCSI (Building Component Safety Information, by TPI and SBCA) for safety practices prior to performing these functions. Installers shall provide temporary bracing per BCSI. Unless noted otherwise, top chord shall have properly attached structural sheathing and bottom chord shall have a properly attached rigid ceiling. Locations shown for permanent lateral restraint of webs shall have continuous lateral restraint (CLR), installed with diagonal bracing installed on the CLR per BCSI sections B3, B7, or B10, as applicable. Apply plates to each face of truss and position as shown above and on the Joint Details, unless noted otherwise. Refer to drawings 160A-Z for standard plate positions. Refer to job's General Notes page for additional information.

Alpine, a division of ITW Building Components Group Inc. shall not be responsible for any deviation from this drawing, any failure to build the truss in conformance with ANSI/TPI 1, or for handling, shipping, installation and bracing of trusses. A seal on this drawing or cover page listing this drawing, indicates acceptance of professional engineering responsibility solely for the design shown. The suitability and use of this drawing for any structure is the responsibility of the Building Designer per ANSI/TPI 1 Sec.2.

For more information see these web sites: Alpine: alpineitw.com; TPI: tpinst.org; SBCA: sbcacomponents.com; ICC: iccsafe.org; AWC: awc.org

SEQN: 206564 / T123 / HIPS FROM:	Ply: 1 Qty: 1 Wgt: 203.0 lbs	**Job Number:** 24070306 7725 RES. **Truss Label:** 2H11P	DRW: ... / ... 07/24/2024

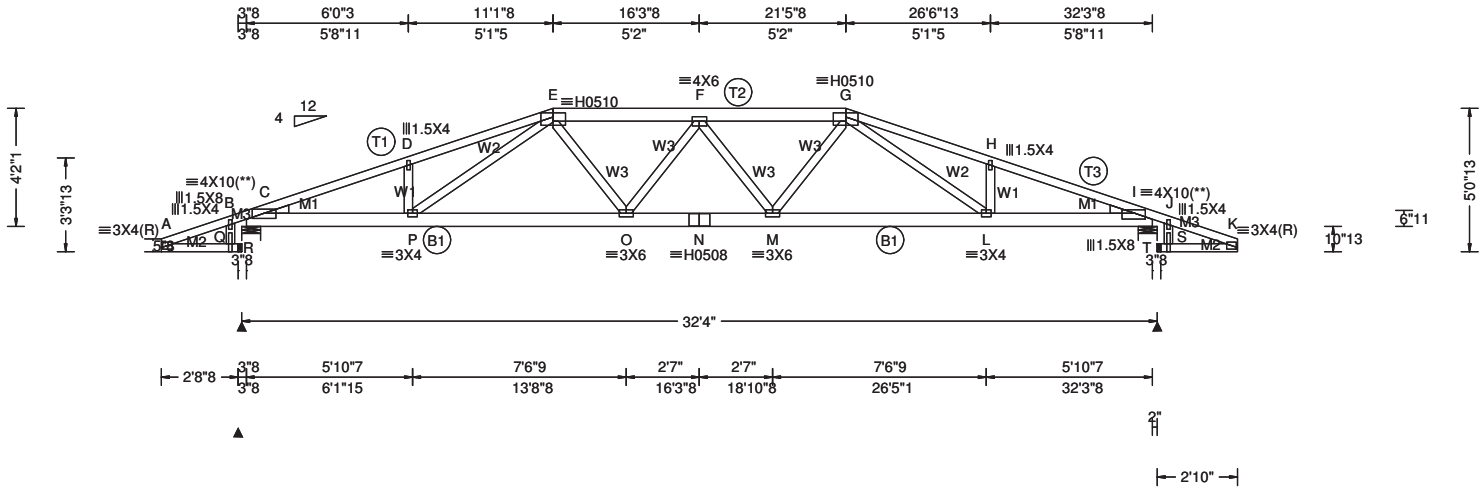

Loading Criteria (psf)

TCLL:	30.00
TCDL:	15.00
BCLL:	0.00
BCDL:	10.00
Des Ld:	55.00
NCBCLL:	10.00
Soffit:	2.00

Load Duration: 1.25
Spacing: 24.0 "

Wind Criteria
Wind Std: ASCE 7-22
Speed: 175 mph
Enclosure: Part. Enc.
Risk Category: II
EXP: C Kzt: NA
Mean Height: 22.37 ft
TCDL: 6.0 psf
BCDL: 6.0 psf
MWFRS Parallel Dist: h/2 to h
C&C Dist a: 3.23 ft
Loc. from endwall: not in 9.00 ft
GCpi: 0.55
Wind Duration: 1.60

Snow Criteria (Pg,Pf in PSF)
Pg: NA Ct: NA CAT: NA
Pf: NA Ce: NA
Lu: NA Cs: NA
Snow Duration: NA

Building Code:
FBC 8th Ed. 2023 Res. HVHZ
TPI Std: 2014
Rep Fac: Yes
FT/RT:20(0)/10(0)
Plate Type(s):
WAVE, HS

Defl/CSI Criteria

PP Deflection in	loc	L/defl	L/#
VERT(LL): -0.269	F	999	360
VERT(CL): 0.455	F	835	240
HORZ(LL): 0.063	I	-	-
HORZ(TL): 0.107	I	-	-

Creep Factor: 2.0
Max TC CSI: 0.955
Max BC CSI: 0.890
Max Web CSI: 0.341
Mfg Specified Camber:

VIEW Ver: 23.02.01A.1204.18

▲ Maximum Reactions (lbs)

Loc	Gravity R+	/ R-	/ Rh	Non-Gravity / Rw	/ U	/ RL
R	-	/-	/257	/-	/-	/543
B	2018	/-	/280	/1881	/1844	/682
J	2034	/-	/-	/1293	/1699	/-
S	-	/-	/72	/-	/-	/483

Wind reactions based on C&C
R Brg Wid = 1.5 Min Req = -
B Brg Wid = 8.0 Min Req = 2.4 (Truss)
J Brg Wid = 8.0 Min Req = 2.4 (Truss)
S Brg Wid = 1.5 Min Req = -
Bearings B & I are a rigid surface.

Maximum Top Chord Forces Per Ply (lbs)

Chords	Tens.	Comp.	Chords	Tens.	Comp.
A - B	550	- 467	F - G	4009	- 3524
B - C	631	- 519	G - H	3971	- 3825
C - D	3814	- 3985	H - I	3882	- 3872
D - E	3895	- 3942	I - J	574	- 469
E - F	3954	- 3534	J - K	501	- 425

Maximum Bot Chord Forces Per Ply (lbs)

Chords	Tens.	Comp.	Chords	Tens.	Comp.
C - P	3721	- 3191	N - M	3701	- 3667
P - O	3256	- 2976	M - L	3231	- 3082
O - N	3701	- 3667	L - I	3609	- 3295

Maximum Web Forces Per Ply (lbs)

Webs	Tens.	Comp.	Webs	Tens.	Comp.
A - Q	489	- 549	F - M	559	- 308
B - Q	211	- 165	M - G	911	- 938
Q - R	487	- 543	G - L	602	- 380
D - P	427	- 444	L - H	425	- 447
P - E	646	- 405	S - T	437	- 483
E - O	756	- 998	T - J	205	- 155
O - F	553	- 292	T - K	443	- 495

Lumber

Top chord: 2x4 SP #2; T2 2x6 SP #2;
T3 2x4 SP #1;
Bot chord: 2x6 SP #2;
Webs: 2x4 SP #2;
Lt Wedge: 2x4 SP #2;Rt Wedge: 2x4 SP #2;
Lt Level Return: 2x4 SP #2;
Rt Level Return: 2x4 SP #2;

Plating Notes

(**) 2 plate(s) require special positioning. Refer to scaled plate plot details for special positioning requirements.

Wind

Member design based on both MWFRS and C&C.

Wind loading based on both gable and hip roof types.

Left bottom chord exposed to wind.

Additional Notes

The maximum horizontal reaction is 280#

***** BEARING ANALOG MODIFIED! *****

****WARNING**** READ AND FOLLOW ALL NOTES ON THIS DRAWING!
****IMPORTANT**** FURNISH THIS DRAWING TO ALL CONTRACTORS INCLUDING THE INSTALLERS
Trusses require extreme care in fabricating, handling, shipping, installing and bracing. Refer to and follow the latest edition of BCSI (Building Component Safety Information, by TPI and SBCA) for safety practices prior to performing these functions. Installers shall provide temporary bracing per BCSI. Unless noted otherwise, top chord shall have properly attached structural sheathing and bottom chord shall have a properly attached rigid ceiling. Locations shown for permanent lateral restraint of webs shall have continuous lateral restraint (CLR), installed with diagonal bracing installed on the CLR per BCSI sections B3, B7, or B10, as applicable. Apply plates to each face of truss and position as shown above and on the Joint Details, unless noted otherwise. Refer to drawings 160A-Z for standard plate positions. Refer to job's General Notes page for additional information.
Alpine, a division of ITW Building Components Group Inc. shall not be responsible for any deviation from this drawing, any failure to build the truss in conformance with ANSI/TPI 1, or for handling, shipping, installation and bracing of trusses. A seal on this drawing or cover page listing this drawing, indicates acceptance of professional engineering responsibility solely for the design shown. The suitability and use of this drawing for any structure is the responsibility of the Building Designer per ANSI/TPI 1 Sec.2.
For more information see these web sites: Alpine: alpineitw.com; TPI: tpinst.org; SBCA: sbcacomponents.com; ICC: iccsafe.org; AWC: awc.org

SEQN: 206567 / T95 / HIPS FROM:	Ply: 1 Qty: 1 Wgt: 207.2 lbs	**Job Number:** 24070306 7725 RES. **Truss Label:** 2H9	DRW: ... / ... 07/24/2024

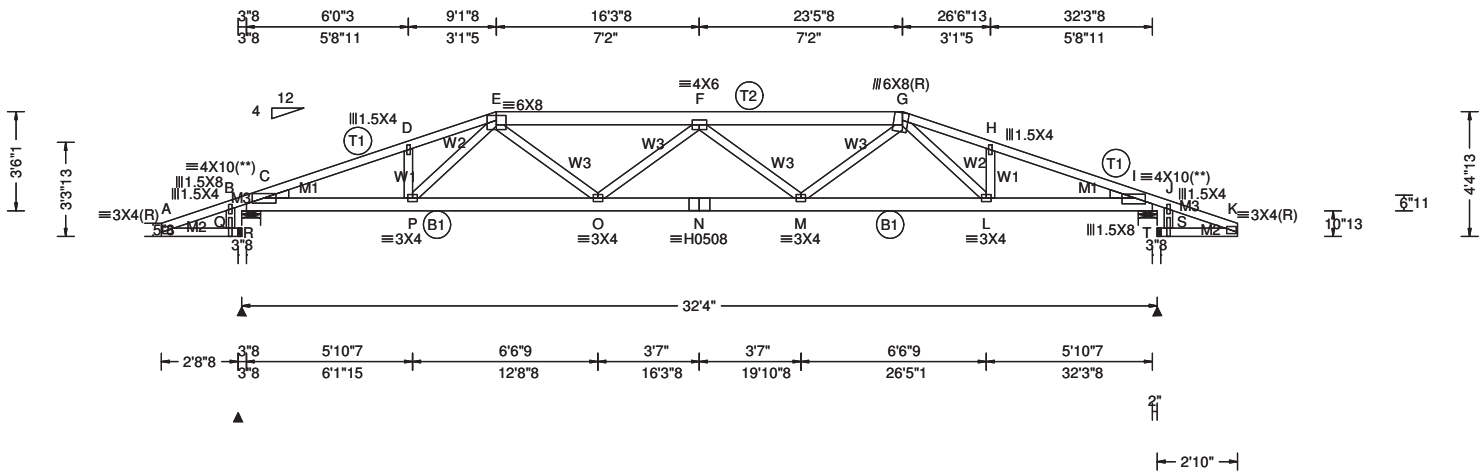

Loading Criteria (psf)

TCLL:	30.00
TCDL:	15.00
BCLL:	0.00
BCDL:	10.00
Des Ld:	55.00
NCBCLL:	10.00
Soffit:	2.00

Load Duration: 1.25
Spacing: 24.0 "

Wind Criteria
Wind Std: ASCE 7-22
Speed: 175 mph
Enclosure: Closed
Risk Category: II
EXP: C Kzt: NA
Mean Height: 22.03 ft
TCDL: 6.0 psf
BCDL: 6.0 psf
MWFRS Parallel Dist: h to 2h
C&C Dist a: 3.23 ft
Loc. from endwall: not in 9.00 ft
GCpi: 0.18
Wind Duration: 1.60

Snow Criteria (Pg,Pf in PSF)
Pg: NA Ct: NA CAT: NA
Pf: NA Ce: NA
Lu: NA Cs: NA
Snow Duration: NA

Building Code:
FBC 8th Ed. 2023 Res. HVHZ
TPI Std: 2014
Rep Fac: Yes
FT/RT:20(0)/10(0)
Plate Type(s):
WAVE, HS

Defl/CSI Criteria

PP Deflection in	loc	L/defl	L/#
VERT(LL): 0.297	F	999	360
VERT(CL): 0.533	F	713	240
HORZ(LL): 0.064	I	-	-
HORZ(TL): 0.115	I	-	-

Creep Factor: 2.0
Max TC CSI: 0.972
Max BC CSI: 0.854
Max Web CSI: 0.278
Mfg Specified Camber:

VIEW Ver: 23.02.01A.1204.18

▲ Maximum Reactions (lbs)

Loc	Gravity R+	/ R-	/ Rh	Non-Gravity / Rw	/ U	/ RL
R	-	/-	/252	/-	/-	/287
B	2018	/-	/275	/1092	/1181	/313
J	2034	/-	/-	/1188	/1190	/-
S	-	/-	/71	/-	/-	/428

Wind reactions based on C&C
R Brg Wid = 1.5 Min Req = -
B Brg Wid = 8.0 Min Req = 2.4 (Truss)
J Brg Wid = 8.0 Min Req = 2.4 (Truss)
S Brg Wid = 1.5 Min Req = -
Bearings B & I are a rigid surface.

Maximum Top Chord Forces Per Ply (lbs)

Chords	Tens.	Comp.	Chords	Tens.	Comp.
A - B	290	- 185	F - G	3152	- 4112
B - C	323	- 184	G - H	2620	- 3753
C - D	2626	- 3951	H - I	2585	- 3832
D - E	2663	- 3875	I - J	500	- 389
E - F	3150	- 4127	J - K	439	- 357

Maximum Bot Chord Forces Per Ply (lbs)

Chords	Tens.	Comp.	Chords	Tens.	Comp.
C - P	3683	- 2412	N - M	4569	- 3497
P - O	3491	- 2496	M - L	3444	- 2330
O - N	4569	- 3497	L - I	3567	- 2201

Maximum Web Forces Per Ply (lbs)

Webs	Tens.	Comp.	Webs	Tens.	Comp.
A - Q	209	- 283	F - M	811	- 598
B - Q	57	- 4	M - G	883	- 724
Q - R	214	- 287	G - L	585	- 142
D - P	163	- 262	L - H	162	- 263
P - E	573	- 148	S - T	376	- 428
E - O	847	- 701	T - J	160	- 110
O - F	801	- 580	T - K	377	- 434

Lumber

Top chord: 2x4 SP #2; T2 2x6 SP #2;
Bot chord: 2x6 SP #2;
Webs: 2x4 SP #2;
Lt Wedge: 2x4 SP #2;Rt Wedge: 2x4 SP #2;
Lt Level Return: 2x4 SP #2;
Rt Level Return: 2x4 SP #2;

Plating Notes

(**) 2 plate(s) require special positioning. Refer to scaled plate plot details for special positioning requirements.

Wind

Member design based on both MWFRS and C&C.

Wind loading based on both gable and hip roof types.

Additional Notes

The maximum horizontal reaction is 275#

***** BEARING ANALOG MODIFIED! *****

****WARNING**** READ AND FOLLOW ALL NOTES ON THIS DRAWING!
****IMPORTANT**** FURNISH THIS DRAWING TO ALL CONTRACTORS INCLUDING THE INSTALLERS
Trusses require extreme care in fabricating, handling, shipping, installing and bracing. Refer to and follow the latest edition of BCSI (Building Component Safety Information, by TPI and SBCA) for safety practices prior to performing these functions. Installers shall provide temporary bracing per BCSI. Unless noted otherwise, top chord shall have properly attached structural sheathing and bottom chord shall have a properly attached rigid ceiling. Locations shown for permanent lateral restraint of webs shall have continuous lateral restraint (CLR), installed with diagonal bracing installed on the CLR per BCSI sections B3, B7, or B10, as applicable. Apply plates to each face of truss and position as shown above and on the Joint Details, unless noted otherwise. Refer to drawings 160A-Z for standard plate positions. Refer to job's General Notes page for additional information.
Alpine, a division of ITW Building Components Group Inc. shall not be responsible for any deviation from this drawing, any failure to build the truss in conformance with ANSI/TPI 1, or for handling, shipping, installation and bracing of trusses. A seal on this drawing or cover page listing this drawing, indicates acceptance of professional engineering responsibility solely for the design shown. The suitability and use of this drawing for any structure is the responsibility of the Building Designer per ANSI/TPI 1 Sec.2.
For more information see these web sites: Alpine: alpineitw.com; TPI: tpinst.org; SBCA: sbcacomponents.com; ICC: iccsafe.org; AWC: awc.org

SEQN: 206570 / T125 / HIPS FROM:	Ply: 1 Qty: 1 Wgt: 210.0 lbs	**Job Number:** 24070306 7725 RES. **Truss Label:** 2H9P	DRW: ... / ... 07/24/2024

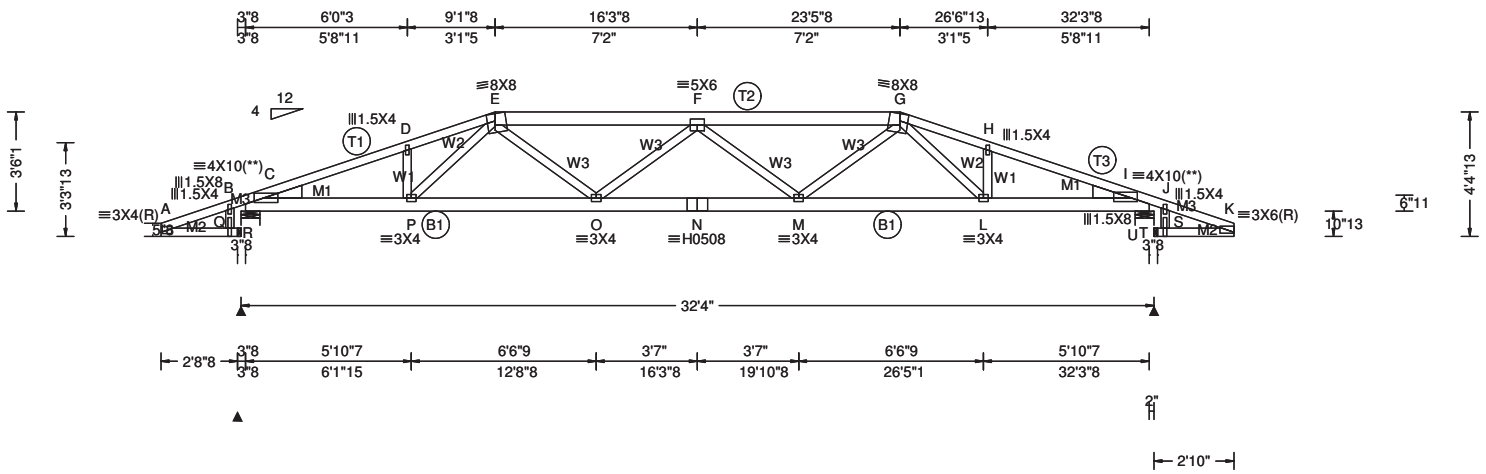

Loading Criteria (psf)		**Wind Criteria**	**Snow Criteria** (Pg,Pf in PSF)	**Defl/CSI Criteria**
TCLL:	30.00	Wind Std: ASCE 7-22	Pg: NA Ct: NA CAT: NA	PP Deflection in loc L/defl L/#
TCDL:	15.00	Speed: 175 mph	Pf: NA Ce: NA	VERT(LL): 0.288 F 999 360
BCLL:	0.00	Enclosure: Part. Enc.	Lu: NA Cs: NA	VERT(CL): 0.516 F 737 240
BCDL:	10.00	Risk Category: II	Snow Duration: NA	HORZ(LL): 0.063 I - -
Des Ld:	55.00	EXP: C Kzt: NA	Building Code:	HORZ(TL): 0.113 I - -
NCBCLL:	10.00	Mean Height: 22.03 ft	FBC 8th Ed. 2023 Res. HVHZ	Creep Factor: 2.0
Soffit:	2.00	TCDL: 6.0 psf	TPI Std: 2014	Max TC CSI: 0.967
Load Duration: 1.25		BCDL: 6.0 psf	Rep Fac: Yes	Max BC CSI: 0.778
Spacing: 24.0 "		MWFRS Parallel Dist: h/2 to h	FT/RT:20(0)/10(0)	Max Web CSI: 0.346
		C&C Dist a: 3.23 ft	Plate Type(s):	Mfg Specified Camber:
		Loc. from endwall: not in 9.00 ft	WAVE, HS	VIEW Ver: 23.02.01A.1204.18
		GCpi: 0.55		
		Wind Duration: 1.60		

Lumber

Top chord: 2x4 SP #2; T2 2x6 SP #2;
T3 2x4 SP #1;
Bot chord: 2x6 SP #2;
Webs: 2x4 SP #2;
Lt Wedge: 2x6 SP #2;Rt Wedge: 2x6 SP #2;
Lt Level Return: 2x4 SP #2;
Rt Level Return: 2x4 SP #2;

Plating Notes

(**) 2 plate(s) require special positioning. Refer to scaled plate plot details for special positioning requirements.

Wind

Member design based on both MWFRS and C&C.

Wind loading based on both gable and hip roof types.

Additional Notes

The maximum horizontal reaction is 285#

***** BEARING ANALOG MODIFIED! *****

▲ Maximum Reactions (lbs)

	Gravity			Non-Gravity		
Loc	R+	/ R-	/ Rh	/ Rw	/ U	/ RL
R	-	/-	/251	/-	/-	/312
B	2018	/-	/285	/1529	/1636	/474
U	2035	/-	/-	/1561	/1630	/-
S	-	/-	/87	/-	/-	/580

Wind reactions based on C&C

R Brg Wid = 1.5 Min Req = -
B Brg Wid = 8.0 Min Req = 2.4 (Truss)
U Brg Wid = 8.0 Min Req = 2.4 (Truss)
S Brg Wid = 1.5 Min Req = -

Bearings B & I are a rigid surface.

Maximum Top Chord Forces Per Ply (lbs)

Chords	Tens.	Comp.	Chords	Tens.	Comp.
A - B	306	- 208	F - G	4205	- 4105
B - C	339	- 211	G - H	3596	- 3747
C - D	3598	- 3940	H - I	3547	- 3818
D - E	3651	- 3874	I - J	667	- 559
E - F	4201	- 4122	J - K	583	- 504

Maximum Bot Chord Forces Per Ply (lbs)

Chords	Tens.	Comp.	Chords	Tens.	Comp.
C - P	3656	- 3205	N - M	4537	- 4508
P - O	3466	- 3237	M - L	3420	- 3071
O - N	4537	- 4508	L - I	3536	- 2964

Maximum Web Forces Per Ply (lbs)

Webs	Tens.	Comp.	Webs	Tens.	Comp.
A - Q	235	- 307	F - M	987	- 597
B - Q	59	- 7	M - G	872	- 904
Q - R	242	- 312	G - L	606	- 208
D - P	238	- 302	L - H	230	- 304
P - E	608	- 223	S - T	532	- 580
E - O	840	- 880	T - J	214	- 164
O - F	973	- 577	T - K	531	- 585

****WARNING**** READ AND FOLLOW ALL NOTES ON THIS DRAWING!
****IMPORTANT**** FURNISH THIS DRAWING TO ALL CONTRACTORS INCLUDING THE INSTALLERS

Trusses require extreme care in fabricating, handling, shipping, installing and bracing. Refer to and follow the latest edition of BCSI (Building Component Safety Information, by TPI and SBCA) for safety practices prior to performing these functions. Installers shall provide temporary bracing per BCSI. Unless noted otherwise, top chord shall have properly attached structural sheathing and bottom chord shall have a properly attached rigid ceiling. Locations shown for permanent lateral restraint of webs shall have continuous lateral restraint (CLR), installed with diagonal bracing installed on the CLR per BCSI sections B3, B7, or B10, as applicable. Apply plates to each face of truss and position as shown above and on the Joint Details, unless noted otherwise. Refer to drawings 160A-Z for standard plate positions. Refer to job's General Notes page for additional information.

Alpine, a division of ITW Building Components Group Inc. shall not be responsible for any deviation from this drawing, any failure to build the truss in conformance with ANSI/TPI 1, or for handling, shipping, installation and bracing of trusses. A seal on this drawing or cover page listing this drawing, indicates acceptance of professional engineering responsibility solely for the design shown. The suitability and use of this drawing for any structure is the responsibility of the Building Designer per ANSI/TPI 1 Sec.2.

For more information see these web sites: Alpine: alpineitw.com; TPI: tpinst.org; SBCA: sbcacomponents.com; ICC: iccsafe.org; AWC: awc.org

SEQN: 139581 / T59 / SPEC FROM:	Ply: 2 Qty: 1 Wgt: 231.7 lbs	**Job Number:** 24070306 7725 RES. **Truss Label:** 2H7G	DRW: ... / ... 07/24/2024

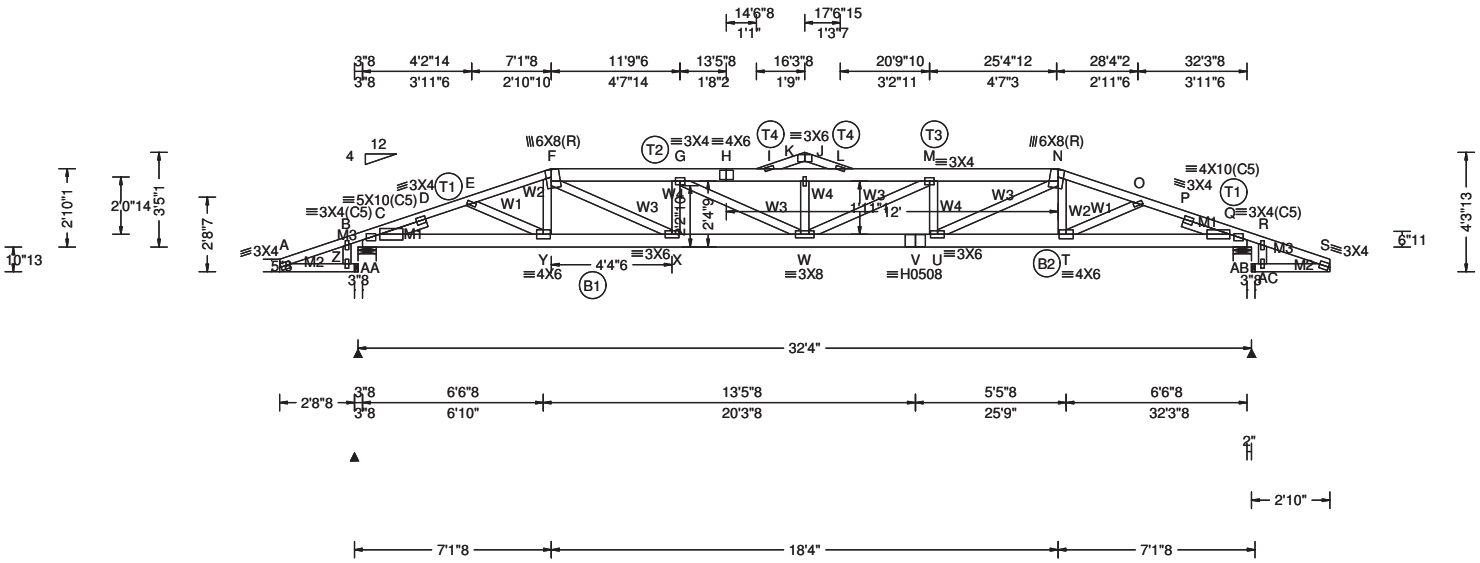

Loading Criteria (psf)

TCLL: 30.00
TCDL: 15.00
BCLL: 0.00
BCDL: 10.00
Des Ld: 55.00
NCBCLL: 0.00
Soffit: 2.00
Load Duration: 1.25
Spacing: 24.0 "

Wind Criteria

Wind Std: ASCE 7-22
Speed: 175 mph
Enclosure: Closed
Risk Category: II
EXP: C Kzt: NA
Mean Height: 21.99 ft
TCDL: 6.0 psf
BCDL: 6.0 psf
MWFRS Parallel Dist: 0 to h/2
C&C Dist a: 3.23 ft
Loc. from endwall: not in 9.00 ft
GCpi: 0.18
Wind Duration: 1.60

Snow Criteria (Pg,Pf in PSF)

Pg: NA Ct: NA CAT: NA
Pf: NA Ce: NA
Lu: NA Cs: NA
Snow Duration: NA

Building Code:
FBC 8th Ed. 2023 Res. HVHZ
TPI Std: 2014
Rep Fac: Varies by Ld Case
FT/RT:20(0)/10(0)
Plate Type(s):
WAVE, HS

Defl/CSI Criteria

PP Deflection in	loc	L/defl	L/#
VERT(LL): 0.354	I	999	360
VERT(CL): 0.641	I	588	240
HORZ(LL): 0.053	F	-	-
HORZ(TL): 0.096	F	-	-

Creep Factor: 2.0
Max TC CSI: 0.728
Max BC CSI: 0.419
Max Web CSI: 0.246
Mfg Specified Camber:

VIEW Ver: 23.02.01A.1204.18

▲ Maximum Reactions (lbs)

Loc	Gravity R+	/ R-	/ Rh	Non-Gravity / Rw	/ U	/ RL
AA	-	/-	/259	/-	/-	/107
B	4092	/-	/247	/-	/1890	/112
R	4110	/-	/-	/-	/1899	/-
AB	-	/-	/146	/-	/-	/4

Wind reactions based on MWFRS
AA Brg Wid = 1.5 Min Req = -
B Brg Wid = 8.0 Min Req = 1.7 (Truss)
R Brg Wid = 8.0 Min Req = 1.7 (Truss)
AB Brg Wid = 1.5 Min Req = -
Bearings B & Q are a rigid surface.

Maximum Top Chord Forces Per Ply (lbs)

Chords	Tens.	Comp.	Chords	Tens.	Comp.
A - B	148	- 72	J - L	94	- 163
B - C	165	- 79	K - L	2446	- 5484
C - D	2106	- 4701	L - M	2531	- 5637
D - E	2076	- 4654	M - N	2430	- 5439
E - F	2129	- 4845	N - O	2107	- 4797
F - G	2438	- 5458	O - P	2042	- 4579
G - H	2531	- 5637	P - Q	2071	- 4623
H - I	2531	- 5637	Q - R	82	- 36
I - J	94	- 163	R - S	75	- 52
I - K	2446	- 5484			

Maximum Bot Chord Forces Per Ply (lbs)

Chords	Tens.	Comp.	Chords	Tens.	Comp.
C - Y	4260	- 1928	V - U	5405	- 2452
Y - X	4449	- 1988	U - T	4411	- 1971
X - W	5423	- 2460	T - Q	4181	- 1892
W - V	5405	- 2452			

Maximum Web Forces Per Ply (lbs)

Webs	Tens.	Comp.	Webs	Tens.	Comp.
A - Z	55	- 127	W - M	244	- 86
B - Z	16	- 4	M - U	210	- 352
Z -AA	54	- 130	U - N	1091	- 521
E - Y	322	- 106	N - T	724	- 250
Y - F	761	- 267	T - O	364	- 125
F - X	1068	- 511	AB-AC	73	- 42
X - G	207	- 348	AC- R	7	- 4
G - W	232	- 77	AC- S	59	- 47
K - W	133	- 189			

Lumber

Top chord: 2x4 SP #2; T2,T3 2x6 SP #2;
Bot chord: 2x6 SP M-26;
Webs: 2x4 SP #2;
Lt Slider: 2x4 SP #2; block length = 1.750'
Rt Slider: 2x4 SP #2; block length = 1.750'
Lt Level Return: 2x4 SP #2;
Rt Level Return: 2x4 SP #2;

Nailnote

Nail Schedule:0.128"x3", min. nails
Top Chord: 1 Row @12.00" o.c.
Bot Chord: 1 Row @11.00" o.c.
Webs : 1 Row @ 4" o.c.
Use equal spacing between rows and stagger nails in each row to avoid splitting.

Special Loads

------(Lumber Dur.Fac.=1.25 / Plate Dur.Fac.=1.25)

TC: From	90 plf at	-3.00 to	90 plf at	35.00
BC: From	20 plf at	0.00 to	20 plf at	32.00
PLB: From	4 plf at	-2.96 to	4 plf at	-0.33
PLB: From	4 plf at	32.33 to	4 plf at	34.96

BC: 505 lb Conc. Load at 6.79,25.21
BC: 1571 lb Conc. Load at 7.19,24.81

Plating Notes

All plates are 1.5X4 except as noted.

Wind

Wind loads and reactions based on MWFRS.

Wind loading based on both gable and hip roof types.

Additional Notes

The maximum horizontal reaction is 259#

***** BEARING ANALOG MODIFIED! *****

****WARNING**** READ AND FOLLOW ALL NOTES ON THIS DRAWING!
****IMPORTANT**** FURNISH THIS DRAWING TO ALL CONTRACTORS INCLUDING THE INSTALLERS

Trusses require extreme care in fabricating, handling, shipping, installing and bracing. Refer to and follow the latest edition of BCSI (Building Component Safety Information, by TPI and SBCA) for safety practices prior to performing these functions. Installers shall provide temporary bracing per BCSI. Unless noted otherwise, top chord shall have properly attached structural sheathing and bottom chord shall have a properly attached rigid ceiling. Locations shown for permanent lateral restraint of webs shall have continuous lateral restraint (CLR), installed with diagonal bracing installed on the CLR per BCSI sections B3, B7, or B10, as applicable. Apply plates to each face of truss and position as shown above and on the Joint Details, unless noted otherwise. Refer to drawings 160A-Z for standard plate positions. Refer to job's General Notes page for additional information.

Alpine, a division of ITW Building Components Group Inc. shall not be responsible for any deviation from this drawing, any failure to build the truss in conformance with ANSI/TPI 1, or for handling, shipping, installation and bracing of trusses. A seal on this drawing or cover page listing this drawing, indicates acceptance of professional engineering responsibility solely for the design shown. The suitability and use of this drawing for any structure is the responsibility of the Building Designer per ANSI/TPI 1 Sec.2.

For more information see these web sites: Alpine: alpineitw.com; TPI: tpinst.org; SBCA: sbcacomponents.com; ICC: iccsafe.org; AWC: awc.org

SEQN: 139584 / T9 / HIPS FROM:	Ply: 2 Qty: 1 Wgt: 280.0 lbs	**Job Number:** 24070306 7725 RES. **Truss Label:** 2H7GP	DRW: ... / ... 07/24/2024

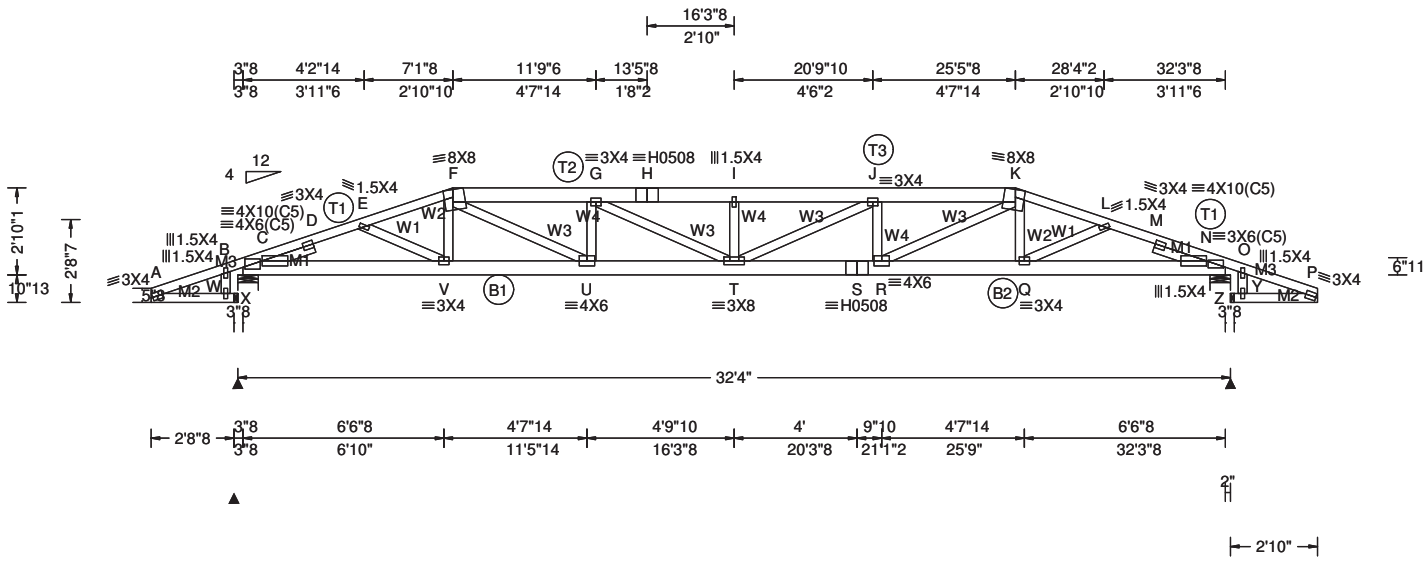

Loading Criteria (psf)

TCLL: 30.00
TCDL: 15.00
BCLL: 0.00
BCDL: 10.00
Des Ld: 55.00
NCBCLL: 0.00
Soffit: 2.00
Load Duration: 1.25
Spacing: 24.0 "

Wind Criteria

Wind Std: ASCE 7-22
Speed: 175 mph
Enclosure: Part. Enc.
Risk Category: II
EXP: C Kzt: NA
Mean Height: 21.70 ft
TCDL: 6.0 psf
BCDL: 6.0 psf
MWFRS Parallel Dist: 0 to h/2
C&C Dist a: 3.23 ft
Loc. from endwall: not in 9.00 ft
GCpi: 0.55
Wind Duration: 1.60

Snow Criteria (Pg,Pf in PSF)

Pg: NA Ct: NA CAT: NA
Pf: NA Ce: NA
Lu: NA Cs: NA
Snow Duration: NA

Building Code:
FBC 8th Ed. 2023 Res. HVHZ
TPI Std: 2014
Rep Fac: Varies by Ld Case
FT/RT:20(0)/10(0)
Plate Type(s):
WAVE, HS

Defl/CSI Criteria

PP Deflection in	loc	L/defl	L/#
VERT(LL): -0.607	I	620	360
VERT(CL): 0.667	I	565	240
HORZ(LL): -0.089	F	-	-
HORZ(TL): 0.098	F	-	-

Creep Factor: 2.0
Max TC CSI: 0.998
Max BC CSI: 0.389
Max Web CSI: 0.415
Mfg Specified Camber:

VIEW Ver: 23.02.01A.1204.18

▲ Maximum Reactions (lbs)

Loc	Gravity R+	/ R-	/ Rh	Non-Gravity / Rw	/ U	/ RL
X	-	/-	/273	/-	/-	/91
B	3731	/-	/232	/-	/3564	/228
O	3748	/-	/-	/-	/3581	/-
Y	-	/-	/153	/-	/-	/137

Wind reactions based on MWFRS
X Brg Wid = 1.5 Min Req = -
B Brg Wid = 8.0 Min Req = 1.5 (Truss)
O Brg Wid = 8.0 Min Req = 1.6 (Truss)
Y Brg Wid = 1.5 Min Req = -
Bearings B & N are a rigid surface.

Maximum Top Chord Forces Per Ply (lbs)

Chords	Tens.	Comp.	Chords	Tens.	Comp.
A - B	154	- 76	I - J	6215	- 6278
B - C	171	- 83	J - K	5575	- 5641
C - D	4115	- 4201	K - L	4179	- 4264
D - E	4069	- 4157	L - M	4000	- 4086
E - F	4223	- 4309	M - N	4043	- 4128
F - G	5592	- 5657	N - O	114	- 30
G - H	6215	- 6278	O - P	104	- 47
H - I	6215	- 6278			

Maximum Bot Chord Forces Per Ply (lbs)

Chords	Tens.	Comp.	Chords	Tens.	Comp.
C - V	3804	- 3718	S - R	5626	- 5559
V - U	4000	- 3921	R - Q	3964	- 3886
U - T	5642	- 5575	Q - N	3730	- 3645
T - S	5626	- 5559			

Maximum Web Forces Per Ply (lbs)

Webs	Tens.	Comp.	Webs	Tens.	Comp.
A - W	49	- 134	T - J	661	- 663
B - W	16	- 4	J - R	437	- 436
W - X	45	- 137	R - K	1839	- 1852
E - V	264	- 268	K - Q	246	- 212
V - F	281	- 246	Q - L	304	- 307
F - U	1817	- 1830	Y - Z	67	- 76
U - G	432	- 431	Z - O	11	- 3
G - T	643	- 646	Z - P	53	- 78
I - T	96	- 99			

Lumber

Top chord: 2x4 SP #2; T2,T3 2x6 SP #2;
Bot chord: 2x6 SP M-26;
Webs: 2x4 SP #2;
Lt Slider: 2x4 SP #2; block length = 1.750'
Rt Slider: 2x4 SP #2; block length = 1.750'
Lt Level Return: 2x4 SP #2;
Rt Level Return: 2x4 SP #2;

Nailnote

Nail Schedule:0.128"x3", min. nails
Top Chord: 1 Row @12.00" o.c.
Bot Chord: 1 Row @12.00" o.c.
Webs : 1 Row @ 4" o.c.
Use equal spacing between rows and stagger nails in each row to avoid splitting.

Special Loads

------(Lumber Dur.Fac.=1.25 / Plate Dur.Fac.=1.25)

TC: From	90 plf at	-3.00 to	90 plf at	6.83
TC: From	45 plf at	6.83 to	45 plf at	25.17
TC: From	90 plf at	25.17 to	90 plf at	35.00
BC: From	20 plf at	0.00 to	20 plf at	6.84
BC: From	10 plf at	6.84 to	10 plf at	25.16
BC: From	20 plf at	25.16 to	20 plf at	32.00
PLB: From	4 plf at	-2.96 to	4 plf at	-0.33
PLB: From	4 plf at	32.33 to	4 plf at	34.96

TC: 230 lb Conc. Load at 6.84, 8.90,10.90,12.90 14.90,16.00,17.10,19.10,21.10,23.10,25.16
BC: 535 lb Conc. Load at 6.84,25.16
BC: 93 lb Conc. Load at 8.90,10.90,12.90,14.90 16.00,17.10,19.10,21.10,23.10

Wind

Wind loads and reactions based on MWFRS.
Wind loading based on both gable and hip roof types.

Additional Notes

The maximum horizontal reaction is 273#
***** BEARING ANALOG MODIFIED! *****

****WARNING**** READ AND FOLLOW ALL NOTES ON THIS DRAWING!
****IMPORTANT**** FURNISH THIS DRAWING TO ALL CONTRACTORS INCLUDING THE INSTALLERS

Trusses require extreme care in fabricating, handling, shipping, installing and bracing. Refer to and follow the latest edition of BCSI (Building Component Safety Information, by TPI and SBCA) for safety practices prior to performing these functions. Installers shall provide temporary bracing per BCSI. Unless noted otherwise, top chord shall have properly attached structural sheathing and bottom chord shall have a properly attached rigid ceiling. Locations shown for permanent lateral restraint of webs shall have continuous lateral restraint (CLR), installed with diagonal bracing installed on the CLR per BCSI sections B3, B7, or B10, as applicable. Apply plates to each face of truss and position as shown above and on the Joint Details, unless noted otherwise. Refer to drawings 160A-Z for standard plate positions. Refer to job's General Notes page for additional information.

Alpine, a division of ITW Building Components Group Inc. shall not be responsible for any deviation from this drawing, any failure to build the truss in conformance with ANSI/TPI 1, or for handling, shipping, installation and bracing of trusses. A seal on this drawing or cover page listing this drawing, indicates acceptance of professional engineering responsibility solely for the design shown. The suitability and use of this drawing for any structure is the responsibility of the Building Designer per ANSI/TPI 1 Sec.2.

For more information see these web sites: Alpine: alpineitw.com; TPI: tpinst.org; SBCA: sbcacomponents.com; ICC: iccsafe.org; AWC: awc.org

SEQN: 204239 / T32 / COMN FROM:	Ply: 1 Qty: 3 Wgt: 152.6 lbs	**Job Number:** 24070306 7725 RES. **Truss Label:** 3T	DRW: ... / ... 07/24/2024

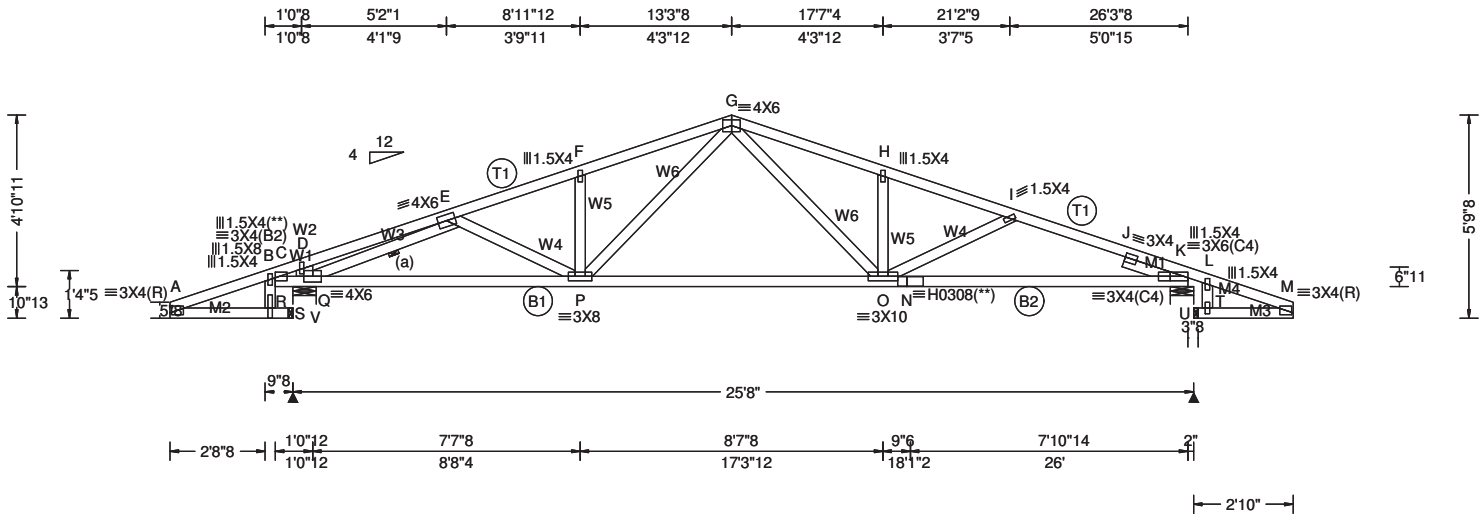

Loading Criteria (psf)

TCLL: 30.00
TCDL: 15.00
BCLL: 0.00
BCDL: 10.00
Des Ld: 55.00
NCBCLL: 10.00
Soffit: 2.00
Load Duration: 1.25
Spacing: 24.0 "

Wind Criteria

Wind Std: ASCE 7-22
Speed: 175 mph
Enclosure: Closed
Risk Category: II
EXP: C Kzt: NA
Mean Height: 15.00 ft
TCDL: 6.0 psf
BCDL: 6.0 psf
MWFRS Parallel Dist: h to 2h
C&C Dist a: 3.00 ft
Loc. from endwall: not in 9.00 ft
GCpi: 0.18
Wind Duration: 1.60

Snow Criteria (Pg,Pf in PSF)

Pg: NA Ct: NA CAT: NA
Pf: NA Ce: NA
Lu: NA Cs: NA
Snow Duration: NA

Building Code:
FBC 8th Ed. 2023 Res. HVHZ
TPI Std: 2014
Rep Fac: Yes
FT/RT:20(0)/10(0)
Plate Type(s):
WAVE, HS

Defl/CSI Criteria

PP Deflection in	loc	L/defl	L/#
VERT(LL): 0.148	H	999	360
VERT(CL): 0.266	H	999	240
HORZ(LL): 0.048	K	-	-
HORZ(TL): 0.087	K	-	-

Creep Factor: 2.0
Max TC CSI: 0.641
Max BC CSI: 0.849
Max Web CSI: 0.378
Mfg Specified Camber:

VIEW Ver: 23.02.01A.1204.18

▲ Maximum Reactions (lbs)

Loc	Gravity R+	/ R-	/ Rh	Non-Gravity / Rw	/ U	/ RL
S	-	/-	/276	/-	/-	/501
V	1746	/-	/269	/1132	/791	/372
K	1658	/-	/-	/1087	/607	/-
T	-	/-	/192	/-	/-	/440

Wind reactions based on C&C
S Brg Wid = 1.5 Min Req = -
V Brg Wid = 8.0 Min Req = 2.1 (Truss)
K Brg Wid = 8.0 Min Req = 2.0 (Truss)
T Brg Wid = 1.5 Min Req = -
Bearings V & K are a rigid surface.

Maximum Top Chord Forces Per Ply (lbs)

Chords	Tens.	Comp.	Chords	Tens.	Comp.
A - B	520	- 449	G - H	856	- 2540
B - C	394	- 323	H - I	778	- 2524
C - D	845	- 858	I - J	864	- 2779
D - E	902	- 879	J - K	1261	- 3032
E - F	766	- 2425	K - L	469	- 368
F - G	854	- 2431	L - M	446	- 357

Maximum Bot Chord Forces Per Ply (lbs)

Chords	Tens.	Comp.	Chords	Tens.	Comp.
C - Q	400	- 321	O - N	2627	- 835
Q - P	2270	- 766	N - K	2629	- 835
P - O	1834	- 568			

Maximum Web Forces Per Ply (lbs)

Webs	Tens.	Comp.	Webs	Tens.	Comp.
A - R	472	- 514	P - G	705	- 216
B - R	202	- 135	G - O	858	- 265
R - S	464	- 501	O - H	236	- 394
D - Q	263	- 390	O - I	169	- 233
Q - E	1290	- 2734	T - U	382	- 440
E - P	197	- 96	U - L	155	- 104
F - P	235	- 379	U - M	379	- 444

Lumber

Top chord: 2x4 SP #2;
Bot chord: 2x4 SP #2;
Webs: 2x4 SP #2; W2 2x6 SP #2;
Rt Slider: 2x4 SP #2; block length = 1.750'
Lt Level Return: 2x4 SP #2;
Rt Level Return: 2x4 SP #2;

Bracing

(a) Continuous lateral restraint equally spaced on member.

Plating Notes

(**) 2 plate(s) require special positioning. Refer to scaled plate plot details for special positioning requirements.

Wind

Member design based on both MWFRS and C&C.

Left end vertical not exposed to wind pressure.

Wind loading based on both gable and hip roof types.

Additional Notes

The maximum horizontal reaction is 276#

***** BEARING ANALOG MODIFIED! *****

****WARNING**** READ AND FOLLOW ALL NOTES ON THIS DRAWING!
****IMPORTANT**** FURNISH THIS DRAWING TO ALL CONTRACTORS INCLUDING THE INSTALLERS

Trusses require extreme care in fabricating, handling, shipping, installing and bracing. Refer to and follow the latest edition of BCSI (Building Component Safety Information, by TPI and SBCA) for safety practices prior to performing these functions. Installers shall provide temporary bracing per BCSI. Unless noted otherwise, top chord shall have properly attached structural sheathing and bottom chord shall have a properly attached rigid ceiling. Locations shown for permanent lateral restraint of webs shall have continuous lateral restraint (CLR), installed with diagonal bracing installed on the CLR per BCSI sections B3, B7, or B10, as applicable. Apply plates to each face of truss and position as shown above and on the Joint Details, unless noted otherwise. Refer to drawings 160A-Z for standard plate positions. Refer to job's General Notes page for additional information.

Alpine, a division of ITW Building Components Group Inc. shall not be responsible for any deviation from this drawing, any failure to build the truss in conformance with ANSI/TPI 1, or for handling, shipping, installation and bracing of trusses. A seal on this drawing or cover page listing this drawing, indicates acceptance of professional engineering responsibility solely for the design shown. The suitability and use of this drawing for any structure is the responsibility of the Building Designer per ANSI/TPI 1 Sec.2.

For more information see these web sites: Alpine: alpineitw.com; TPI: tpinst.org; SBCA: sbcacomponents.com; ICC: iccsafe.org; AWC: awc.org

SEQN: 204245 / T29 / HIPS FROM:	Ply: 1 Qty: 1 Wgt: 152.6 lbs	**Job Number:** 24070306 7725 RES. **Truss Label:** 3H13	DRW: ... / ... 07/24/2024

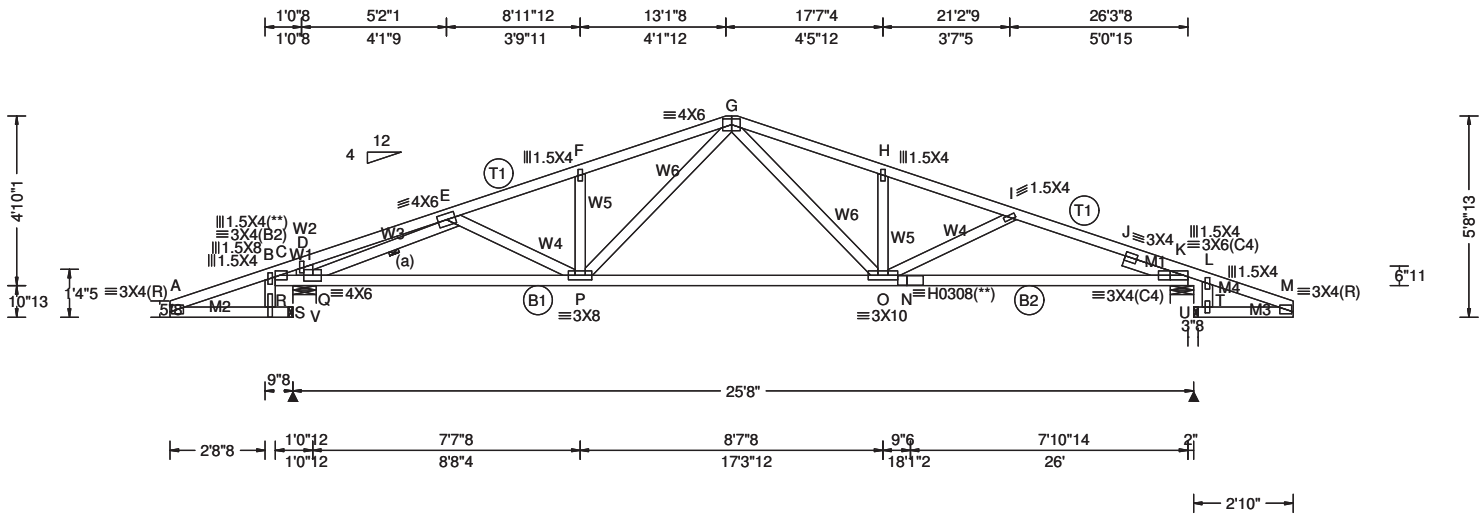

Loading Criteria (psf)

TCLL: 30.00
TCDL: 15.00
BCLL: 0.00
BCDL: 10.00
Des Ld: 55.00
NCBCLL: 10.00
Soffit: 2.00
Load Duration: 1.25
Spacing: 24.0 "

Wind Criteria

Wind Std: ASCE 7-22
Speed: 175 mph
Enclosure: Closed
Risk Category: II
EXP: C Kzt: NA
Mean Height: 15.00 ft
TCDL: 6.0 psf
BCDL: 6.0 psf
MWFRS Parallel Dist: h/2 to h
C&C Dist a: 3.00 ft
Loc. from endwall: not in 9.00 ft
GCpi: 0.18
Wind Duration: 1.60

Snow Criteria (Pg,Pf in PSF)

Pg: NA Ct: NA CAT: NA
Pf: NA Ce: NA
Lu: NA Cs: NA
Snow Duration: NA

Building Code:
FBC 8th Ed. 2023 Res. HVHZ
TPI Std: 2014
Rep Fac: Yes
FT/RT:20(0)/10(0)
Plate Type(s):
WAVE, HS

Defl/CSI Criteria

PP Deflection in	loc	L/defl	L/#
VERT(LL): 0.148	H	999	360
VERT(CL): 0.266	H	999	240
HORZ(LL): 0.048	K	-	-
HORZ(TL): 0.087	K	-	-

Creep Factor: 2.0
Max TC CSI: 0.641
Max BC CSI: 0.849
Max Web CSI: 0.379
Mfg Specified Camber:

VIEW Ver: 23.02.01A.1204.18

▲ Maximum Reactions (lbs)

Loc	Gravity R+	/ R-	/ Rh	Non-Gravity / Rw	/ U	/ RL
S	-	/-	/276	/-	/-	/501
V	1746	/-	/269	/1124	/787	/372
K	1658	/-	/-	/1080	/603	/-
T	-	/-	/192	/-	/-	/441

Wind reactions based on C&C
S Brg Wid = 1.5 Min Req = -
V Brg Wid = 8.0 Min Req = 2.1 (Truss)
K Brg Wid = 8.0 Min Req = 2.0 (Truss)
T Brg Wid = 1.5 Min Req = -
Bearings V & K are a rigid surface.

Maximum Top Chord Forces Per Ply (lbs)

Chords	Tens.	Comp.	Chords	Tens.	Comp.
A - B	521	- 449	G - H	1017	- 2540
B - C	394	- 323	H - I	927	- 2524
C - D	845	- 858	I - J	1063	- 2779
D - E	903	- 879	J - K	1277	- 3032
E - F	887	- 2425	K - L	469	- 368
F - G	978	- 2431	L - M	446	- 357

Maximum Bot Chord Forces Per Ply (lbs)

Chords	Tens.	Comp.	Chords	Tens.	Comp.
C - Q	400	- 321	O - N	2627	- 857
Q - P	2270	- 760	N - K	2629	- 857
P - O	1834	- 557			

Maximum Web Forces Per Ply (lbs)

Webs	Tens.	Comp.	Webs	Tens.	Comp.
A - R	472	- 514	P - G	705	- 254
B - R	202	- 135	G - O	858	- 309
R - S	464	- 501	O - H	244	- 394
D - Q	263	- 390	O - I	221	- 233
Q - E	1281	- 2734	T - U	382	- 441
E - P	196	- 96	U - L	155	- 104
F - P	244	- 379	U - M	379	- 444

Lumber

Top chord: 2x4 SP #2;
Bot chord: 2x4 SP #2;
Webs: 2x4 SP #2; W2 2x6 SP #2;
Rt Slider: 2x4 SP #2; block length = 1.750'
Lt Level Return: 2x4 SP #2;
Rt Level Return: 2x4 SP #2;

Bracing

(a) Continuous lateral restraint equally spaced on member.

Plating Notes

(**) 2 plate(s) require special positioning. Refer to scaled plate plot details for special positioning requirements.

Wind

Member design based on both MWFRS and C&C.

Left end vertical not exposed to wind pressure.

Wind loading based on both gable and hip roof types.

Additional Notes

The maximum horizontal reaction is 276#

***** BEARING ANALOG MODIFIED! *****

****WARNING**** READ AND FOLLOW ALL NOTES ON THIS DRAWING!
****IMPORTANT**** FURNISH THIS DRAWING TO ALL CONTRACTORS INCLUDING THE INSTALLERS

Trusses require extreme care in fabricating, handling, shipping, installing and bracing. Refer to and follow the latest edition of BCSI (Building Component Safety Information, by TPI and SBCA) for safety practices prior to performing these functions. Installers shall provide temporary bracing per BCSI. Unless noted otherwise, top chord shall have properly attached structural sheathing and bottom chord shall have a properly attached rigid ceiling. Locations shown for permanent lateral restraint of webs shall have continuous lateral restraint (CLR), installed with diagonal bracing installed on the CLR per BCSI sections B3, B7, or B10, as applicable. Apply plates to each face of truss and position as shown above and on the Joint Details, unless noted otherwise. Refer to drawings 160A-Z for standard plate positions. Refer to job's General Notes page for additional information.

Alpine, a division of ITW Building Components Group Inc. shall not be responsible for any deviation from this drawing, any failure to build the truss in conformance with ANSI/TPI 1, or for handling, shipping, installation and bracing of trusses. A seal on this drawing or cover page listing this drawing, indicates acceptance of professional engineering responsibility solely for the design shown. The suitability and use of this drawing for any structure is the responsibility of the Building Designer per ANSI/TPI 1 Sec.2.

For more information see these web sites: Alpine: alpineitw.com; TPI: tpinst.org; SBCA: sbcacomponents.com; ICC: iccsafe.org; AWC: awc.org

SEQN: 204236 / T38 / HIPS FROM:	Ply: 1 Qty: 1 Wgt: 144.2 lbs	**Job Number:** 24070306 7725 RES. **Truss Label:** 3H13A	DRW: ... / ... 07/24/2024

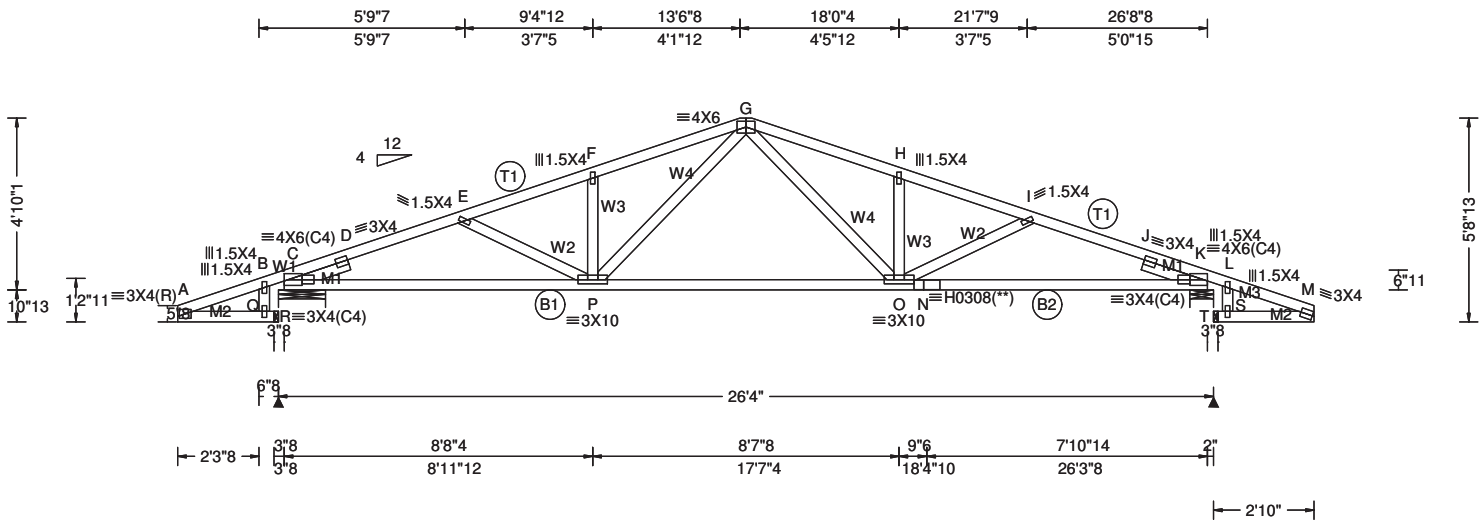

Loading Criteria (psf)		**Wind Criteria**	**Snow Criteria** (Pg,Pf in PSF)	**Defl/CSI Criteria**
TCLL:	30.00	Wind Std: ASCE 7-22	Pg: NA Ct: NA CAT: NA	PP Deflection in loc L/defl L/#
TCDL:	15.00	Speed: 175 mph	Pf: NA Ce: NA	VERT(LL): 0.172 H 999 360
BCLL:	0.00	Enclosure: Closed	Lu: NA Cs: NA	VERT(CL): 0.303 H 999 240
BCDL:	10.00	Risk Category: II	Snow Duration: NA	HORZ(LL): -0.072 J - -
Des Ld:	55.00	EXP: C Kzt: NA		HORZ(TL): 0.104 K - -
NCBCLL:	10.00	Mean Height: 15.00 ft	Building Code:	Creep Factor: 2.0
Soffit:	2.00	TCDL: 6.0 psf	FBC 8th Ed. 2023 Res. HVHZ	Max TC CSI: 0.756
Load Duration: 1.25		BCDL: 6.0 psf	TPI Std: 2014	Max BC CSI: 0.883
Spacing: 24.0 "		MWFRS Parallel Dist: h to 2h	Rep Fac: Yes	Max Web CSI: 0.273
		C&C Dist a: 3.00 ft	FT/RT:20(0)/10(0)	Mfg Specified Camber:
		Loc. from endwall: not in 9.00 ft	Plate Type(s):	
		GCpi: 0.18	WAVE, HS	VIEW Ver: 23.02.01A.1204.18
		Wind Duration: 1.60		

Lumber

Top chord: 2x4 SP #2;
Bot chord: 2x4 SP #2;
Webs: 2x4 SP #2;
Lt Slider: 2x4 SP #2; block length = 1.752'
Rt Slider: 2x4 SP #2; block length = 1.750'
Lt Level Return: 2x4 SP #2;
Rt Level Return: 2x4 SP #2;

Plating Notes

(**) 1 plate(s) require special positioning. Refer to scaled plate plot details for special positioning requirements.

Wind

Member design based on both MWFRS and C&C.

Left end vertical not exposed to wind pressure.

Wind loading based on both gable and hip roof types.

Additional Notes

***** BEARING ANALOG MODIFIED! *****

▲ Maximum Reactions (lbs)

Loc	Gravity R+	/ R-	/ Rh	Non-Gravity / Rw	/ U	/ RL
R	-	/-	/190	/-	/-	/269
B	1698	/-	/-	/1134	/617	/-
K	1704	/-	/-	/1097	/613	/-
S	-	/-	/190	/-	/-	/341

Wind reactions based on C&C
R Brg Wid = 1.5 Min Req = -
B Brg Wid = 16.0 Min Req = 2.0 (Truss)
K Brg Wid = 8.0 Min Req = 2.0 (Truss)
S Brg Wid = 1.5 Min Req = -
Bearings B & K are a rigid surface.

Maximum Top Chord Forces Per Ply (lbs)

Chords	Tens.	Comp.	Chords	Tens.	Comp.
A - B	269	- 170	G - H	922	- 2660
B - C	272	- 183	H - I	835	- 2643
C - D	1162	- 3212	I - J	950	- 2907
D - E	926	- 2967	J - K	1317	- 3153
E - F	825	- 2675	K - L	371	- 212
F - G	913	- 2687	L - M	363	- 225

Maximum Bot Chord Forces Per Ply (lbs)

Chords	Tens.	Comp.	Chords	Tens.	Comp.
C - P	2789	- 883	O - N	2815	- 889
P - O	2007	- 543	N - K	2818	- 889

Maximum Web Forces Per Ply (lbs)

Webs	Tens.	Comp.	Webs	Tens.	Comp.
A - Q	193	- 266	G - O	860	- 282
B - Q	55	- 3	O - H	232	- 398
Q - R	208	- 269	O - I	189	- 243
E - P	190	- 283	S - T	224	- 341
F - P	237	- 395	T - L	145	- 89
P - G	881	- 271	T - M	234	- 353

****WARNING**** READ AND FOLLOW ALL NOTES ON THIS DRAWING!
****IMPORTANT**** FURNISH THIS DRAWING TO ALL CONTRACTORS INCLUDING THE INSTALLERS
Trusses require extreme care in fabricating, handling, shipping, installing and bracing. Refer to and follow the latest edition of BCSI (Building Component Safety Information, by TPI and SBCA) for safety practices prior to performing these functions. Installers shall provide temporary bracing per BCSI. Unless noted otherwise, top chord shall have properly attached structural sheathing and bottom chord shall have a properly attached rigid ceiling. Locations shown for permanent lateral restraint of webs shall have continuous lateral restraint (CLR), installed with diagonal bracing installed on the CLR per BCSI sections B3, B7, or B10, as applicable. Apply plates to each face of truss and position as shown above and on the Joint Details, unless noted otherwise. Refer to drawings 160A-Z for standard plate positions. Refer to job's General Notes page for additional information.
Alpine, a division of ITW Building Components Group Inc. shall not be responsible for any deviation from this drawing, any failure to build the truss in conformance with ANSI/TPI 1, or for handling, shipping, installation and bracing of trusses. A seal on this drawing or cover page listing this drawing, indicates acceptance of professional engineering responsibility solely for the design shown. The suitability and use of this drawing for any structure is the responsibility of the Building Designer per ANSI/TPI 1 Sec.2.
For more information see these web sites: Alpine: alpineitw.com; TPI: tpinst.org; SBCA: sbcacomponents.com; ICC: iccsafe.org; AWC: awc.org

SEQN: 204248 / T27 / HIPS FROM:	Ply: 1 Qty: 1 Wgt: 162.4 lbs	**Job Number:** 24070306 7725 RES. **Truss Label:** 3H11	DRW: ... / ... 07/24/2024

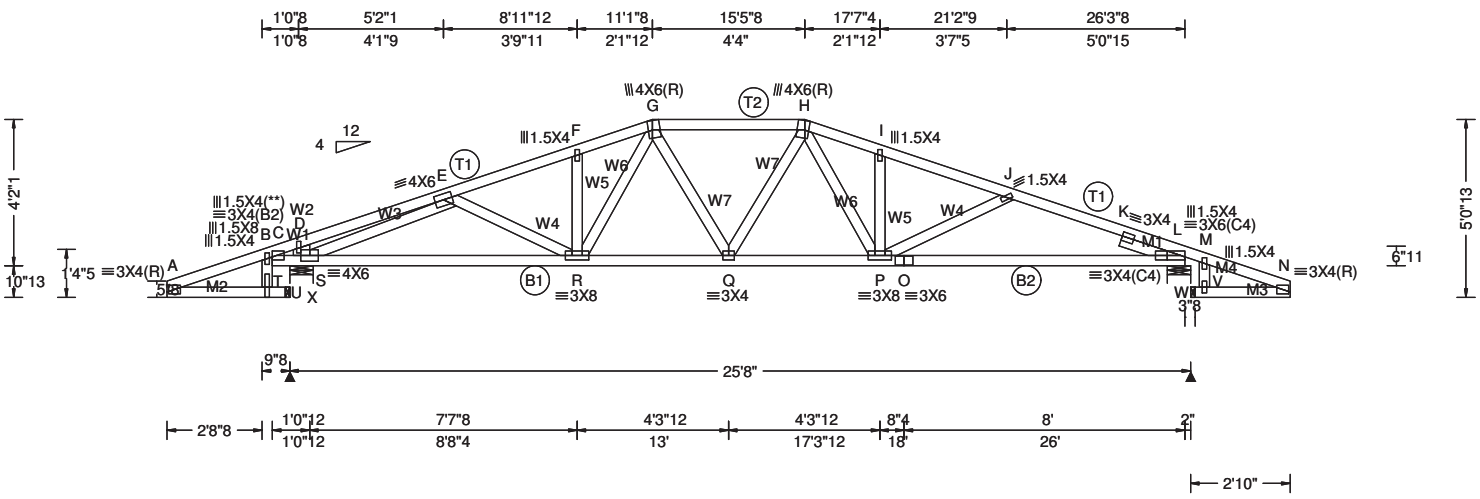

Loading Criteria (psf)

TCLL:	30.00
TCDL:	15.00
BCLL:	0.00
BCDL:	10.00
Des Ld:	55.00
NCBCLL:	10.00
Soffit:	2.00

Load Duration: 1.25
Spacing: 24.0 "

Wind Criteria
Wind Std: ASCE 7-22
Speed: 175 mph
Enclosure: Closed
Risk Category: II
EXP: C Kzt: NA
Mean Height: 15.00 ft
TCDL: 6.0 psf
BCDL: 6.0 psf
MWFRS Parallel Dist: h/2 to h
C&C Dist a: 3.00 ft
Loc. from endwall: not in 9.00 ft
GCpi: 0.18
Wind Duration: 1.60

Snow Criteria (Pg,Pf in PSF)
Pg: NA Ct: NA CAT: NA
Pf: NA Ce: NA
Lu: NA Cs: NA
Snow Duration: NA

Building Code:
FBC 8th Ed. 2023 Res. HVHZ
TPI Std: 2014
Rep Fac: Yes
FT/RT:20(0)/10(0)
Plate Type(s):
WAVE

Defl/CSI Criteria

PP Deflection in	loc	L/defl	L/#
VERT(LL): 0.143	I	999	360
VERT(CL): 0.257	I	999	240
HORZ(LL): 0.050	L	-	-
HORZ(TL): 0.091	L	-	-

Creep Factor: 2.0
Max TC CSI: 0.618
Max BC CSI: 0.883
Max Web CSI: 0.991
Mfg Specified Camber:

VIEW Ver: 23.02.01A.1204.18

▲ Maximum Reactions (lbs)

Loc	Gravity R+	/ R-	/ Rh	Non-Gravity / Rw	/ U	/ RL
U	-	/-	/276	/-	/-	/500
X	1745	/-	/274	/1119	/958	/387
L	1658	/-	/-	/1009	/764	/-
V	-	/-	/187	/-	/-	/434

Wind reactions based on C&C
U Brg Wid = 1.5 Min Req = -
X Brg Wid = 8.0 Min Req = 2.1 (Truss)
L Brg Wid = 8.0 Min Req = 2.0 (Truss)
V Brg Wid = 1.5 Min Req = -
Bearings X & L are a rigid surface.

Maximum Top Chord Forces Per Ply (lbs)

Chords	Tens.	Comp.	Chords	Tens.	Comp.
A - B	520	- 444	H - I	1286	- 2474
B - C	393	- 318	I - J	1228	- 2493
C - D	822	- 848	J - K	1316	- 2770
D - E	878	- 870	K - L	1482	- 3038
E - F	1215	- 2393	L - M	462	- 363
F - G	1270	- 2362	M - N	441	- 353
G - H	1193	- 2055			

Maximum Bot Chord Forces Per Ply (lbs)

Chords	Tens.	Comp.	Chords	Tens.	Comp.
C - S	393	- 311	Q - P	2115	- 1060
S - R	2261	- 1114	P - O	2613	- 1195
R - Q	2074	- 1083	O - L	2616	- 1195

Maximum Web Forces Per Ply (lbs)

Webs	Tens.	Comp.	Webs	Tens.	Comp.
A - T	467	- 513	G - Q	126	- 68
B - T	202	- 134	Q - H	82	- 56
T - U	459	- 500	H - P	544	- 189
D - S	269	- 374	P - I	168	- 276
S - E	1656	- 2700	P - J	236	- 266
E - R	197	- 234	V - W	378	- 434
F - R	167	- 259	W - M	154	- 103
R - G	493	- 143	W - N	374	- 438

Lumber

Top chord: 2x4 SP #2;
Bot chord: 2x4 SP #2;
Webs: 2x4 SP #2; W2 2x6 SP #2;
Rt Slider: 2x4 SP #2; block length = 1.750'
Lt Level Return: 2x4 SP #2;
Rt Level Return: 2x4 SP #2;

Plating Notes

(**) 1 plate(s) require special positioning. Refer to scaled plate plot details for special positioning requirements.

Wind

Member design based on both MWFRS and C&C.

Left end vertical not exposed to wind pressure.

Wind loading based on both gable and hip roof types.

Additional Notes

The maximum horizontal reaction is 276#

***** BEARING ANALOG MODIFIED! *****

****WARNING**** READ AND FOLLOW ALL NOTES ON THIS DRAWING!
****IMPORTANT**** FURNISH THIS DRAWING TO ALL CONTRACTORS INCLUDING THE INSTALLERS

Trusses require extreme care in fabricating, handling, shipping, installing and bracing. Refer to and follow the latest edition of BCSI (Building Component Safety Information, by TPI and SBCA) for safety practices prior to performing these functions. Installers shall provide temporary bracing per BCSI. Unless noted otherwise, top chord shall have properly attached structural sheathing and bottom chord shall have a properly attached rigid ceiling. Locations shown for permanent lateral restraint of webs shall have continuous lateral restraint (CLR), installed with diagonal bracing installed on the CLR per BCSI sections B3, B7, or B10, as applicable. Apply plates to each face of truss and position as shown above and on the Joint Details, unless noted otherwise. Refer to drawings 160A-Z for standard plate positions. Refer to job's General Notes page for additional information.

Alpine, a division of ITW Building Components Group Inc. shall not be responsible for any deviation from this drawing, any failure to build the truss in conformance with ANSI/TPI 1, or for handling, shipping, installation and bracing of trusses. A seal on this drawing or cover page listing this drawing, indicates acceptance of professional engineering responsibility solely for the design shown. The suitability and use of this drawing for any structure is the responsibility of the Building Designer per ANSI/TPI 1 Sec.2.

For more information see these web sites: Alpine: alpineitw.com; TPI: tpinst.org; SBCA: sbcacomponents.com; ICC: iccsafe.org; AWC: awc.org

SEQN: 204251 / T12 / SPEC FROM:	Ply: 1 Qty: 1 Wgt: 151.2 lbs	**Job Number:** 24070306 7725 RES. **Truss Label:** 3H11A	DRW: ... / ... 07/24/2024

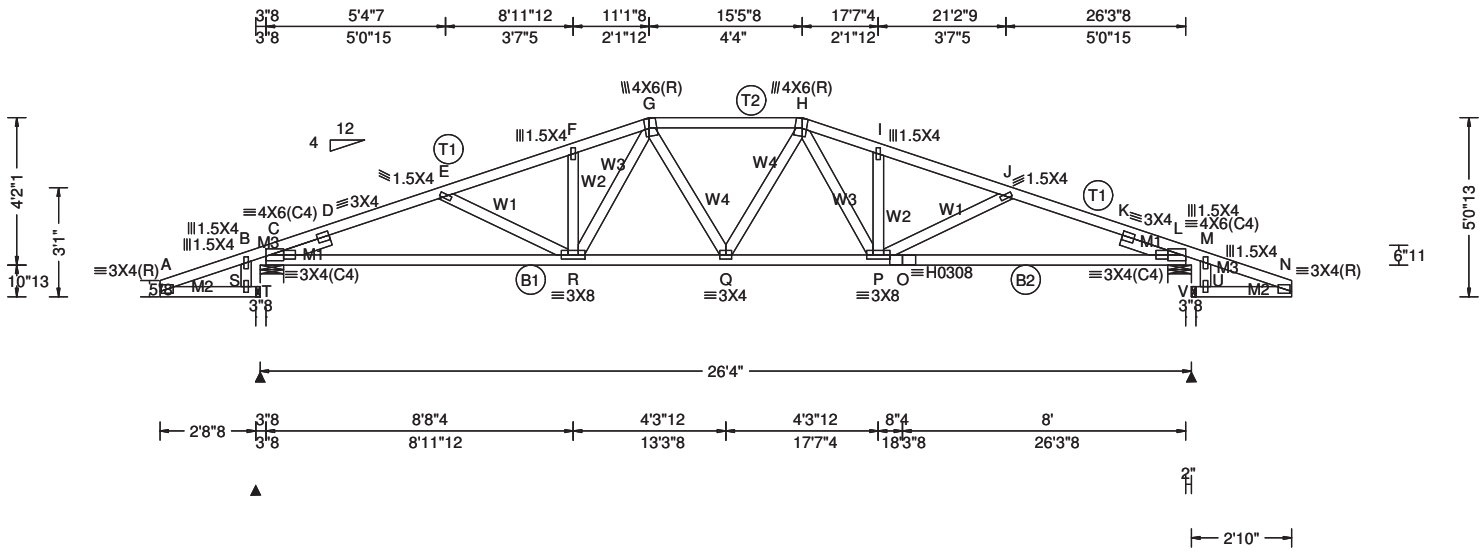

Loading Criteria (psf)

TCLL:	30.00
TCDL:	15.00
BCLL:	0.00
BCDL:	10.00
Des Ld:	55.00
NCBCLL:	10.00
Soffit:	2.00

Load Duration: 1.25
Spacing: 24.0 "

Wind Criteria
Wind Std: ASCE 7-22
Speed: 175 mph
Enclosure: Closed
Risk Category: II
EXP: C Kzt: NA
Mean Height: 15.00 ft
TCDL: 6.0 psf
BCDL: 6.0 psf
MWFRS Parallel Dist: h to 2h
C&C Dist a: 3.00 ft
Loc. from endwall: not in 9.00 ft
GCpi: 0.18
Wind Duration: 1.60

Snow Criteria (Pg,Pf in PSF)
Pg: NA Ct: NA CAT: NA
Pf: NA Ce: NA
Lu: NA Cs: NA
Snow Duration: NA

Building Code:
FBC 8th Ed. 2023 Res. HVHZ
TPI Std: 2014
Rep Fac: Yes
FT/RT:20(0)/10(0)
Plate Type(s):
WAVE, HS

Defl/CSI Criteria

PP Deflection in	loc	L/defl	L/#
VERT(LL): 0.172	Q	999	360
VERT(CL): 0.306	Q	999	240
HORZ(LL): 0.055	L	-	-
HORZ(TL): 0.099	L	-	-

Creep Factor: 2.0
Max TC CSI: 0.727
Max BC CSI: 0.914
Max Web CSI: 0.332
Mfg Specified Camber:

VIEW Ver: 23.02.01A.1204.18

Lumber
Top chord: 2x4 SP #2;
Bot chord: 2x4 SP #2;
Webs: 2x4 SP #2;
Lt Slider: 2x4 SP #2; block length = 1.750'
Rt Slider: 2x4 SP #2; block length = 1.750'
Lt Level Return: 2x4 SP #2;
Rt Level Return: 2x4 SP #2;

Wind
Member design based on both MWFRS and C&C.
Wind loading based on both gable and hip roof types.

Additional Notes
The maximum horizontal reaction is 269#
***** BEARING ANALOG MODIFIED! *****

▲ Maximum Reactions (lbs)

Loc	Gravity R+	/ R-	/ Rh	Non-Gravity / Rw	/ U	/ RL
T	-	/-	/259	/-	/-	/284
C	1689	/-	/269	/935	/773	/321
L	1705	/-	/-	/1024	/778	/-
U	-	/-	/63	/-	/-	/430

Wind reactions based on C&C
T Brg Wid = 1.5 Min Req = -
C Brg Wid = 8.0 Min Req = 2.0 (Truss)
L Brg Wid = 8.0 Min Req = 2.0 (Truss)
U Brg Wid = 1.5 Min Req = -
Bearings C & L are a rigid surface.

Maximum Top Chord Forces Per Ply (lbs)

Chords	Tens.	Comp.	Chords	Tens.	Comp.
A - B	296	- 217	H - I	1372	- 2600
B - C	302	- 206	I - J	1314	- 2618
C - D	1468	- 3185	J - K	1392	- 2885
D - E	1401	- 2976	K - L	1507	- 3139
E - F	1310	- 2653	L - M	458	- 362
F - G	1367	- 2628	M - N	437	- 352
G - H	1259	- 2205			

Maximum Bot Chord Forces Per Ply (lbs)

Chords	Tens.	Comp.	Chords	Tens.	Comp.
C - R	2804	- 1339	P - O	2700	- 1223
R - Q	2234	- 1141	O - L	2703	- 1222
Q - P	2220	- 1098			

Maximum Web Forces Per Ply (lbs)

Webs	Tens.	Comp.	Webs	Tens.	Comp.
A - S	245	- 280	Q - H	112	- 57
B - S	57	- 8	H - P	536	- 120
S - T	251	- 284	P - I	166	- 280
E - R	188	- 329	P - J	190	- 247
F - R	161	- 262	U - V	377	- 430
R - G	566	- 123	V - M	154	- 103
G - Q	103	- 64	V - N	374	- 434

****WARNING**** READ AND FOLLOW ALL NOTES ON THIS DRAWING!
****IMPORTANT**** FURNISH THIS DRAWING TO ALL CONTRACTORS INCLUDING THE INSTALLERS
Trusses require extreme care in fabricating, handling, shipping, installing and bracing. Refer to and follow the latest edition of BCSI (Building Component Safety Information, by TPI and SBCA) for safety practices prior to performing these functions. Installers shall provide temporary bracing per BCSI. Unless noted otherwise, top chord shall have properly attached structural sheathing and bottom chord shall have a properly attached rigid ceiling. Locations shown for permanent lateral restraint of webs shall have continuous lateral restraint (CLR), installed with diagonal bracing installed on the CLR per BCSI sections B3, B7, or B10, as applicable. Apply plates to each face of truss and position as shown above and on the Joint Details, unless noted otherwise. Refer to drawings 160A-Z for standard plate positions. Refer to job's General Notes page for additional information.
Alpine, a division of ITW Building Components Group Inc. shall not be responsible for any deviation from this drawing, any failure to build the truss in conformance with ANSI/TPI 1, or for handling, shipping, installation and bracing of trusses. A seal on this drawing or cover page listing this drawing, indicates acceptance of professional engineering responsibility solely for the design shown. The suitability and use of this drawing for any structure is the responsibility of the Building Designer per ANSI/TPI 1 Sec.2.
For more information see these web sites: Alpine: alpineitw.com; TPI: tpinst.org; SBCA: sbcacomponents.com; ICC: iccsafe.org; AWC: awc.org

SEQN: 204256 / T14 / HIPS FROM:	Ply: 1 Qty: 1 Wgt: 156.8 lbs	**Job Number:** 24070306 7725 RES. **Truss Label:** 3H9	DRW: ... / ... 07/24/2024

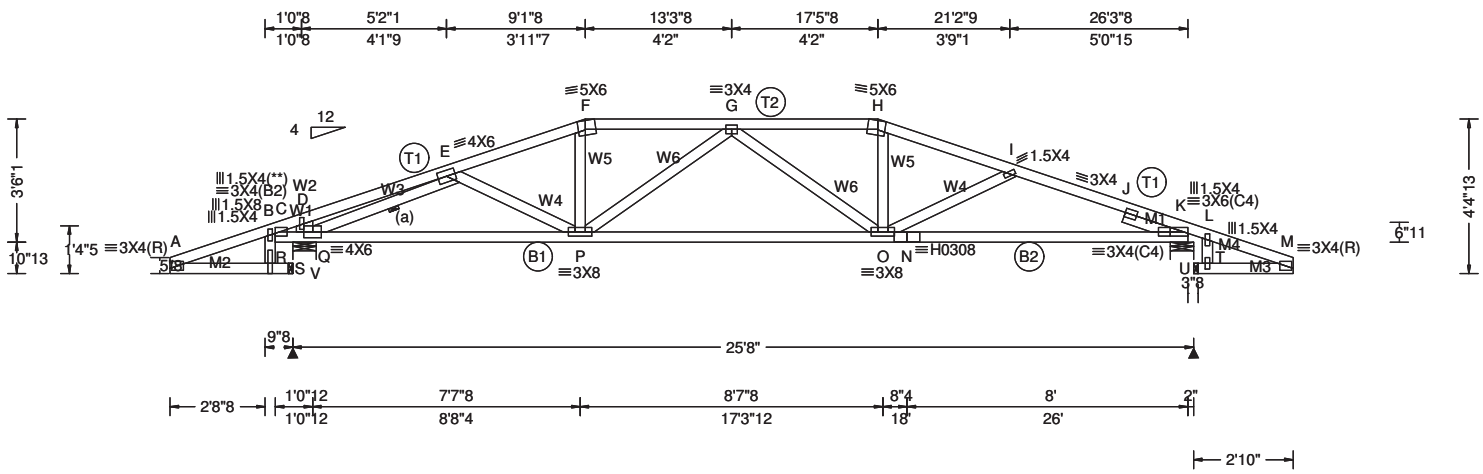

Loading Criteria (psf)

TCLL:	30.00
TCDL:	15.00
BCLL:	0.00
BCDL:	10.00
Des Ld:	55.00
NCBCLL:	10.00
Soffit:	2.00

Load Duration: 1.25
Spacing: 24.0 "

Wind Criteria
Wind Std: ASCE 7-22
Speed: 175 mph
Enclosure: Closed
Risk Category: II
EXP: C Kzt: NA
Mean Height: 15.00 ft
TCDL: 6.0 psf
BCDL: 6.0 psf
MWFRS Parallel Dist: h/2 to h
C&C Dist a: 3.00 ft
Loc. from endwall: not in 9.00 ft
GCpi: 0.18
Wind Duration: 1.60

Snow Criteria (Pg,Pf in PSF)
Pg: NA Ct: NA CAT: NA
Pf: NA Ce: NA
Lu: NA Cs: NA
Snow Duration: NA

Building Code:
FBC 8th Ed. 2023 Res. HVHZ
TPI Std: 2014
Rep Fac: Yes
FT/RT:20(0)/10(0)
Plate Type(s):
WAVE, HS

Defl/CSI Criteria

PP Deflection in	loc	L/defl	L/#
VERT(LL): 0.159	G	999	360
VERT(CL): 0.286	G	999	240
HORZ(LL): 0.053	K	-	-
HORZ(TL): 0.098	K	-	-

Creep Factor: 2.0
Max TC CSI: 0.671
Max BC CSI: 0.856
Max Web CSI: 0.380
Mfg Specified Camber:

VIEW Ver: 23.02.01A.1204.18

▲ Maximum Reactions (lbs)

Loc	Gravity R+	/ R-	/ Rh	Non-Gravity / Rw	/ U	/ RL
S	-	/-	/275	/-	/-	/500
V	1745	/-	/275	/1130	/1112	/405
K	1658	/-	/-	/1019	/910	/-
T	-	/-	/186	/-	/-	/433

Wind reactions based on C&C
S Brg Wid = 1.5 Min Req = -
V Brg Wid = 8.0 Min Req = 2.1 (Truss)
K Brg Wid = 8.0 Min Req = 2.0 (Truss)
T Brg Wid = 1.5 Min Req = -
Bearings V & K are a rigid surface.

Maximum Top Chord Forces Per Ply (lbs)

Chords	Tens.	Comp.	Chords	Tens.	Comp.
A - B	520	- 438	G - H	1608	- 2316
B - C	393	- 311	H - I	1646	- 2505
C - D	844	- 820	I - J	1723	- 2777
D - E	901	- 843	J - K	1821	- 3025
E - F	1621	- 2410	K - L	461	- 355
F - G	1581	- 2217	L - M	440	- 346

Maximum Bot Chord Forces Per Ply (lbs)

Chords	Tens.	Comp.	Chords	Tens.	Comp.
C - Q	373	- 319	O - N	2610	- 1497
Q - P	2259	- 1415	N - K	2612	- 1497
P - O	2572	- 1805			

Maximum Web Forces Per Ply (lbs)

Webs	Tens.	Comp.	Webs	Tens.	Comp.
A - R	459	- 513	P - G	555	- 398
B - R	202	- 134	G - O	463	- 254
R - S	451	- 500	H - O	392	- 163
D - Q	281	- 382	O - I	238	- 349
Q - E	1963	- 2745	T - U	369	- 433
E - P	224	- 394	U - L	154	- 102
P - F	375	- 140	U - M	366	- 437

Lumber

Top chord: 2x4 SP #2;
Bot chord: 2x4 SP #2;
Webs: 2x4 SP #2; W2 2x6 SP #2;
Rt Slider: 2x4 SP #2; block length = 1.750'
Lt Level Return: 2x4 SP #2;
Rt Level Return: 2x4 SP #2;

Bracing

(a) Continuous lateral restraint equally spaced on member.

Plating Notes

(**) 1 plate(s) require special positioning. Refer to scaled plate plot details for special positioning requirements.

Wind

Member design based on both MWFRS and C&C.

Left end vertical not exposed to wind pressure.

Wind loading based on both gable and hip roof types.

Additional Notes

The maximum horizontal reaction is 275#

***** BEARING ANALOG MODIFIED! *****

****WARNING**** READ AND FOLLOW ALL NOTES ON THIS DRAWING!
****IMPORTANT**** FURNISH THIS DRAWING TO ALL CONTRACTORS INCLUDING THE INSTALLERS

Trusses require extreme care in fabricating, handling, shipping, installing and bracing. Refer to and follow the latest edition of BCSI (Building Component Safety Information, by TPI and SBCA) for safety practices prior to performing these functions. Installers shall provide temporary bracing per BCSI. Unless noted otherwise, top chord shall have properly attached structural sheathing and bottom chord shall have a properly attached rigid ceiling. Locations shown for permanent lateral restraint of webs shall have continuous lateral restraint (CLR), installed with diagonal bracing installed on the CLR per BCSI sections B3, B7, or B10, as applicable. Apply plates to each face of truss and position as shown above and on the Joint Details, unless noted otherwise. Refer to drawings 160A-Z for standard plate positions. Refer to job's General Notes page for additional information.

Alpine, a division of ITW Building Components Group Inc. shall not be responsible for any deviation from this drawing, any failure to build the truss in conformance with ANSI/TPI 1, or for handling, shipping, installation and bracing of trusses. A seal on this drawing or cover page listing this drawing, indicates acceptance of professional engineering responsibility solely for the design shown. The suitability and use of this drawing for any structure is the responsibility of the Building Designer per ANSI/TPI 1 Sec.2.

For more information see these web sites: Alpine: alpineitw.com; TPI: tpinst.org; SBCA: sbcacomponents.com; ICC: iccsafe.org; AWC: awc.org

SEQN: 204264 / T25 / SPEC FROM:	Ply: 1 Qty: 1 Wgt: 142.8 lbs	**Job Number:** 24070306 7725 RES. **Truss Label:** 3H9A	DRW: ... / ... 07/24/2024

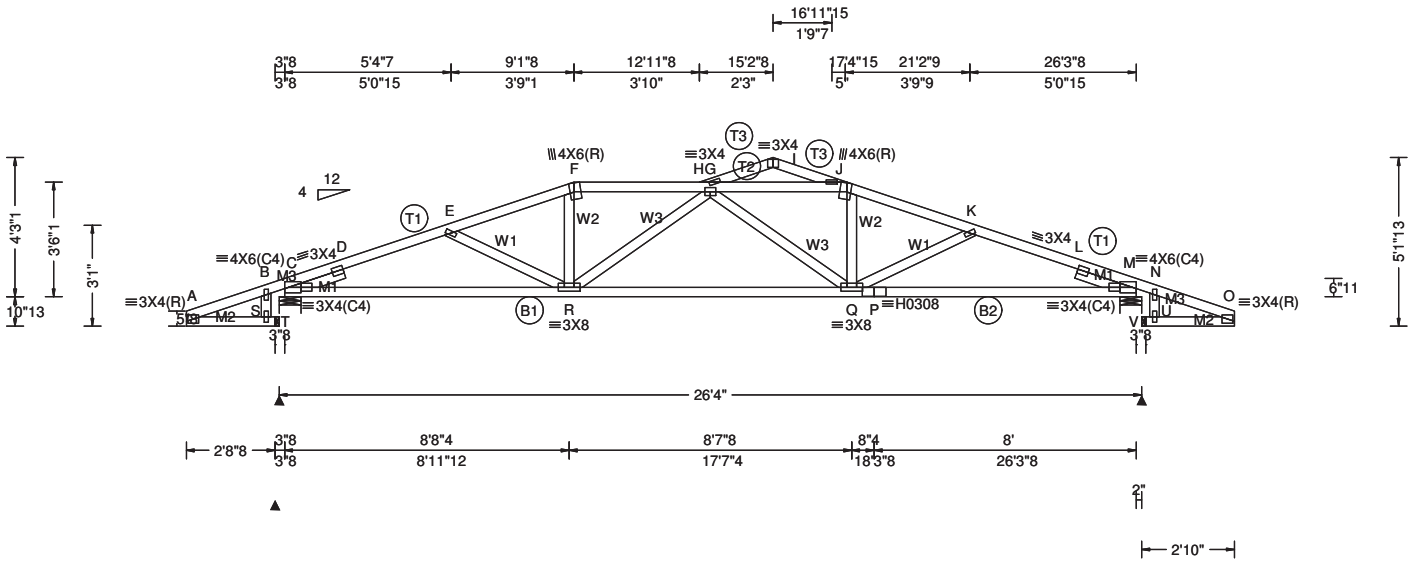

Loading Criteria (psf)

TCLL: 30.00
TCDL: 15.00
BCLL: 0.00
BCDL: 10.00
Des Ld: 55.00
NCBCLL: 10.00
Soffit: 2.00
Load Duration: 1.25
Spacing: 24.0 "

Wind Criteria

Wind Std: ASCE 7-22
Speed: 175 mph
Enclosure: Closed
Risk Category: II
EXP: C Kzt: NA
Mean Height: 15.00 ft
TCDL: 6.0 psf
BCDL: 6.0 psf
MWFRS Parallel Dist: h to 2h
C&C Dist a: 3.00 ft
Loc. from endwall: not in 9.00 ft
GCpi: 0.18
Wind Duration: 1.60

Snow Criteria (Pg,Pf in PSF)

Pg: NA Ct: NA CAT: NA
Pf: NA Ce: NA
Lu: NA Cs: NA
Snow Duration: NA

Building Code:
FBC 8th Ed. 2023 Res. HVHZ
TPI Std: 2014
Rep Fac: Yes
FT/RT:20(0)/10(0)
Plate Type(s):
WAVE, HS

Defl/CSI Criteria

PP Deflection in	loc	L/defl	L/#
VERT(LL): 0.190	G	999	360
VERT(CL): 0.338	G	904	240
HORZ(LL): 0.059	M	-	-
HORZ(TL): 0.106	M	-	-

Creep Factor: 2.0
Max TC CSI: 0.711
Max BC CSI: 0.898
Max Web CSI: 0.337
Mfg Specified Camber:

VIEW Ver: 23.02.01A.1204.18

▲ Maximum Reactions (lbs)

Loc	Gravity R+	Gravity / R-	Gravity / Rh	Non-Gravity / Rw	Non-Gravity / U	Non-Gravity / RL
T	-	/-	/262	/-	/-	/287
C	1689	/-	/272	/930	/787	/322
M	1705	/-	/-	/1019	/709	/-
U	-	/-	/62	/-	/-	/431

Wind reactions based on C&C
T Brg Wid = 1.5 Min Req = -
C Brg Wid = 8.0 Min Req = 2.0 (Truss)
M Brg Wid = 8.0 Min Req = 2.0 (Truss)
U Brg Wid = 1.5 Min Req = -
Bearings C & M are a rigid surface.

Maximum Top Chord Forces Per Ply (lbs)

Chords	Tens.	Comp.	Chords	Tens.	Comp.
A - B	298	- 214	H - J	971	- 2080
B - C	305	- 202	I - J	218	- 335
C - D	1496	- 3196	J - K	1199	- 2615
D - E	1403	- 2985	K - L	1298	- 2905
E - F	1319	- 2673	L - M	1404	- 3130
F - G	1285	- 2470	M - N	459	- 363
G - H	1155	- 2377	N - O	438	- 353
H - I	222	- 341			

Maximum Bot Chord Forces Per Ply (lbs)

Chords	Tens.	Comp.	Chords	Tens.	Comp.
C - R	2807	- 1337	Q - P	2716	- 1075
R - Q	2719	- 1247	P - M	2718	- 1075

Maximum Web Forces Per Ply (lbs)

Webs	Tens.	Comp.	Webs	Tens.	Comp.
A - S	241	- 283	G - Q	433	- 378
B - S	57	- 8	J - Q	476	- 201
S - T	247	- 287	Q - K	210	- 280
E - R	202	- 313	U - V	378	- 431
R - F	434	- 56	V - N	154	- 103
R - G	224	- 267	V - O	374	- 435

Lumber

Top chord: 2x4 SP #2;
Bot chord: 2x4 SP #2;
Webs: 2x4 SP #2;
Lt Slider: 2x4 SP #2; block length = 1.750'
Rt Slider: 2x4 SP #2; block length = 1.750'
Lt Level Return: 2x4 SP #2;
Rt Level Return: 2x4 SP #2;

Plating Notes

All plates are 1.5X4 except as noted.

Wind

Member design based on both MWFRS and C&C.
Wind loading based on both gable and hip roof types.

Additional Notes

The maximum horizontal reaction is 272#
***** BEARING ANALOG MODIFIED! *****

****WARNING**** READ AND FOLLOW ALL NOTES ON THIS DRAWING!
****IMPORTANT**** FURNISH THIS DRAWING TO ALL CONTRACTORS INCLUDING THE INSTALLERS

Trusses require extreme care in fabricating, handling, shipping, installing and bracing. Refer to and follow the latest edition of BCSI (Building Component Safety Information, by TPI and SBCA) for safety practices prior to performing these functions. Installers shall provide temporary bracing per BCSI. Unless noted otherwise, top chord shall have properly attached structural sheathing and bottom chord shall have a properly attached rigid ceiling. Locations shown for permanent lateral restraint of webs shall have continuous lateral restraint (CLR), installed with diagonal bracing installed on the CLR per BCSI sections B3, B7, or B10, as applicable. Apply plates to each face of truss and position as shown above and on the Joint Details, unless noted otherwise. Refer to drawings 160A-Z for standard plate positions. Refer to job's General Notes page for additional information.

Alpine, a division of ITW Building Components Group Inc. shall not be responsible for any deviation from this drawing, any failure to build the truss in conformance with ANSI/TPI 1, or for handling, shipping, installation and bracing of trusses. A seal on this drawing or cover page listing this drawing, indicates acceptance of professional engineering responsibility solely for the design shown. The suitability and use of this drawing for any structure is the responsibility of the Building Designer per ANSI/TPI 1 Sec.2.

For more information see these web sites: Alpine: alpineitw.com; TPI: tpinst.org; SBCA: sbcacomponents.com; ICC: iccsafe.org; AWC: awc.org

SEQN: 204272 / T31 / SPEC FROM:	Ply: 1 Qty: 1 Wgt: 172.2 lbs	**Job Number:** 24070306 7725 RES. **Truss Label:** 3H7	DRW: ... / ... 07/24/2024

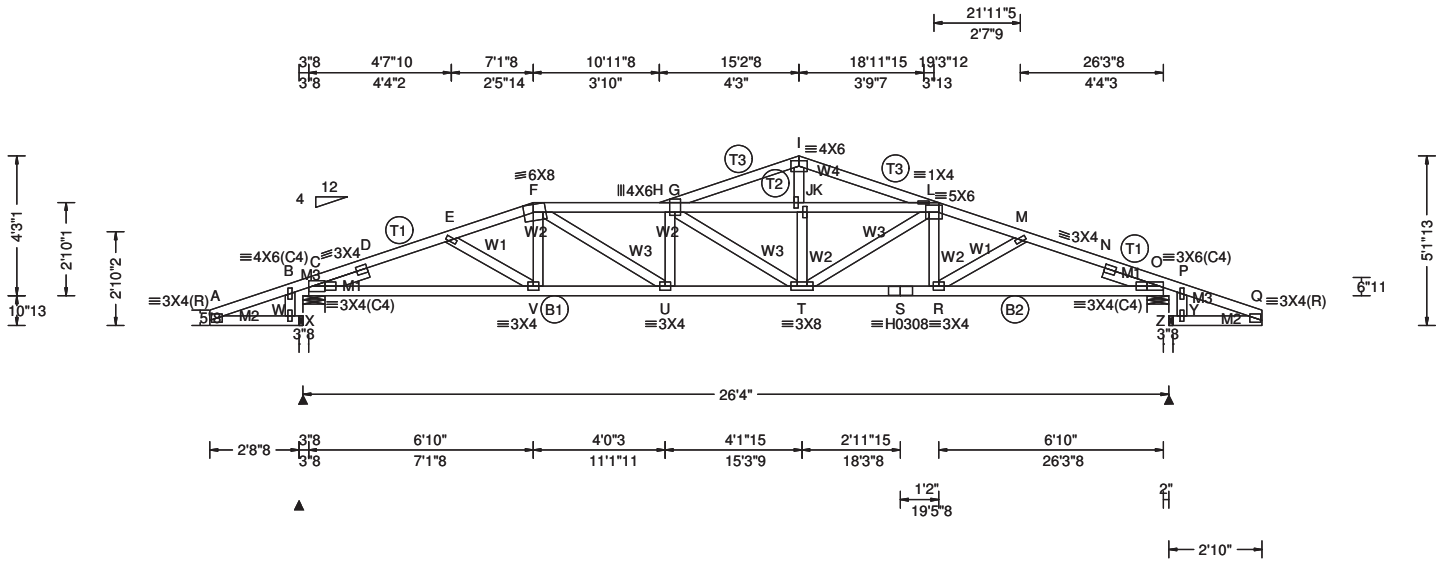

Loading Criteria (psf)

TCLL:	30.00
TCDL:	15.00
BCLL:	0.00
BCDL:	10.00
Des Ld:	55.00
NCBCLL:	10.00
Soffit:	2.00

Load Duration: 1.25
Spacing: 24.0 "

Wind Criteria
Wind Std: ASCE 7-22
Speed: 175 mph
Enclosure: Closed
Risk Category: II
EXP: C Kzt: NA
Mean Height: 15.00 ft
TCDL: 6.0 psf
BCDL: 6.0 psf
MWFRS Parallel Dist: h to 2h
C&C Dist a: 3.00 ft
Loc. from endwall: not in 9.00 ft
GCpi: 0.18
Wind Duration: 1.60

Snow Criteria (Pg,Pf in PSF)
Pg: NA Ct: NA CAT: NA
Pf: NA Ce: NA
Lu: NA Cs: NA
Snow Duration: NA

Building Code:
FBC 8th Ed. 2023 Res. HVHZ
TPI Std: 2014
Rep Fac: Yes
FT/RT:20(0)/10(0)
Plate Type(s):
WAVE, HS

Defl/CSI Criteria

PP Deflection in	loc	L/defl	L/#
VERT(LL): 0.203	G	999	360
VERT(CL): 0.363	G	843	240
HORZ(LL): 0.059	O	-	-
HORZ(TL): 0.106	O	-	-

Creep Factor: 2.0
Max TC CSI: 0.881
Max BC CSI: 0.961
Max Web CSI: 0.348
Mfg Specified Camber:

VIEW Ver: 23.02.01A.1204.18

▲ Maximum Reactions (lbs)

Loc	Gravity R+	/ R-	/ Rh	Non-Gravity / Rw	/ U	/ RL
X	-	/-	/258	/-	/-	/286
C	1688	/-	/272	/927	/790	/322
O	1706	/-	/-	/1011	/680	/-
Y	-	/-	/100	/-	/-	/424

Wind reactions based on C&C
X Brg Wid = 1.5 Min Req = -
C Brg Wid = 8.0 Min Req = 2.0 (Truss)
O Brg Wid = 8.0 Min Req = 2.0 (Truss)
Y Brg Wid = 1.5 Min Req = -
Bearings C & O are a rigid surface.

Maximum Top Chord Forces Per Ply (lbs)

Chords	Tens.	Comp.	Chords	Tens.	Comp.
A - B	295	- 203	I - L	613	- 1421
B - C	302	- 189	K - L	609	- 1323
C - D	1469	- 3146	L - M	1088	- 2717
D - E	1417	- 2940	M - N	1117	- 2824
E - F	1392	- 2813	N - O	1319	- 2962
F - G	1592	- 3306	O - P	452	- 360
G - J	611	- 1331	P - Q	433	- 351
H - I	630	- 1420			

Maximum Bot Chord Forces Per Ply (lbs)

Chords	Tens.	Comp.	Chords	Tens.	Comp.
C - V	2745	- 1337	T - S	2573	- 884
V - U	2673	- 1287	S - R	2573	- 884
U - T	3368	- 1490	R - O	2619	- 915

Maximum Web Forces Per Ply (lbs)

Webs	Tens.	Comp.	Webs	Tens.	Comp.
A - W	229	- 282	I - J	505	- 184
B - W	57	- 6	K - T	536	- 225
W - X	234	- 286	T - L	280	- 155
E - V	134	- 202	L - R	149	- 25
F - V	207	- 5	R - M	143	- 133
F - U	789	- 326	Y - Z	375	- 424
U - G	219	- 356	Z - P	153	- 103
G - T	599	- 918	Z - Q	372	- 429

Lumber
Top chord: 2x4 SP #2;
Bot chord: 2x4 SP #2;
Webs: 2x4 SP #2;
Lt Slider: 2x4 SP #2; block length = 1.750'
Rt Slider: 2x4 SP #2; block length = 1.750'
Lt Level Return: 2x4 SP #2;
Rt Level Return: 2x4 SP #2;

Plating Notes
All plates are 1.5X4 except as noted.

Wind
Member design based on both MWFRS and C&C.
Wind loading based on both gable and hip roof types.

Additional Notes
The maximum horizontal reaction is 272#
***** BEARING ANALOG MODIFIED! *****

****WARNING**** READ AND FOLLOW ALL NOTES ON THIS DRAWING!
****IMPORTANT**** FURNISH THIS DRAWING TO ALL CONTRACTORS INCLUDING THE INSTALLERS

Trusses require extreme care in fabricating, handling, shipping, installing and bracing. Refer to and follow the latest edition of BCSI (Building Component Safety Information, by TPI and SBCA) for safety practices prior to performing these functions. Installers shall provide temporary bracing per BCSI. Unless noted otherwise, top chord shall have properly attached structural sheathing and bottom chord shall have a properly attached rigid ceiling. Locations shown for permanent lateral restraint of webs shall have continuous lateral restraint (CLR), installed with diagonal bracing installed on the CLR per BCSI sections B3, B7, or B10, as applicable. Apply plates to each face of truss and position as shown above and on the Joint Details, unless noted otherwise. Refer to drawings 160A-Z for standard plate positions. Refer to job's General Notes page for additional information.

Alpine, a division of ITW Building Components Group Inc. shall not be responsible for any deviation from this drawing, any failure to build the truss in conformance with ANSI/TPI 1, or for handling, shipping, installation and bracing of trusses. A seal on this drawing or cover page listing this drawing, indicates acceptance of professional engineering responsibility solely for the design shown. The suitability and use of this drawing for any structure is the responsibility of the Building Designer per ANSI/TPI 1 Sec.2.

For more information see these web sites: Alpine: alpineitw.com; TPI: tpinst.org; SBCA: sbcacomponents.com; ICC: iccsafe.org; AWC: awc.org

SEQN: 139642 / T10 / HIPS FROM:	Ply: 2 Qty: 1 Wgt: 196.0 lbs	**Job Number:** 24070306 7725 RES. **Truss Label:** 3H7G	DRW: ... / ... 07/24/2024

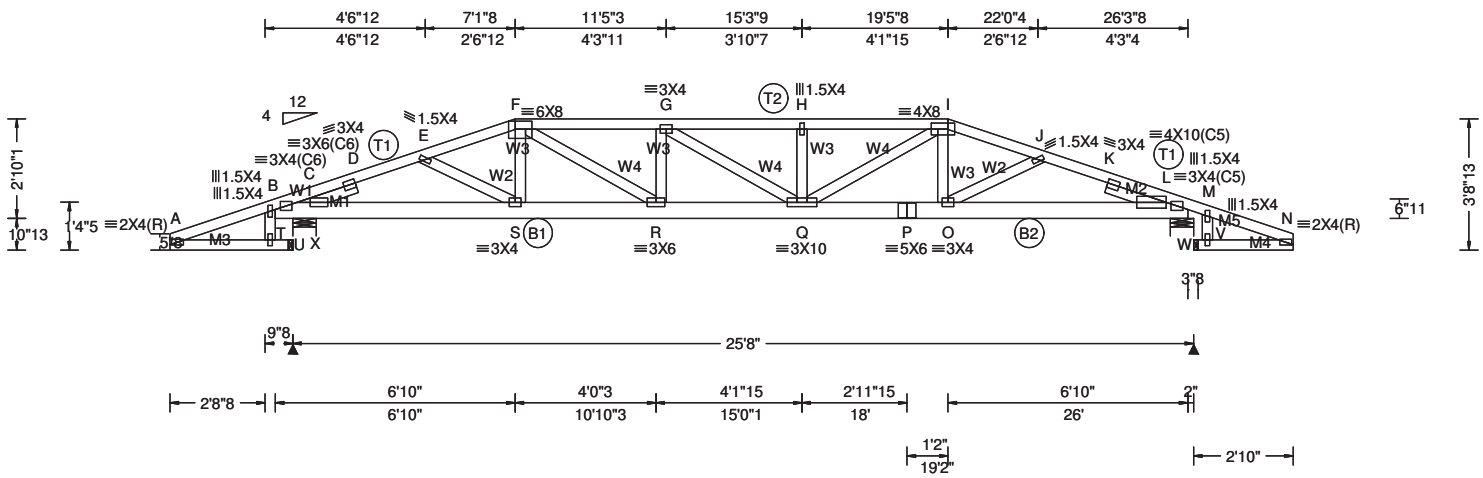

Loading Criteria (psf)

TCLL: 30.00
TCDL: 15.00
BCLL: 0.00
BCDL: 10.00
Des Ld: 55.00
NCBCLL: 0.00
Soffit: 2.00
Load Duration: 1.25
Spacing: 24.0 "

Wind Criteria

Wind Std: ASCE 7-22
Speed: 175 mph
Enclosure: Closed
Risk Category: II
EXP: C Kzt: NA
Mean Height: 15.00 ft
TCDL: 6.0 psf
BCDL: 6.0 psf
MWFRS Parallel Dist: 0 to h/2
C&C Dist a: 3.00 ft
Loc. from endwall: not in 4.50 ft
GCpi: 0.18
Wind Duration: 1.60

Snow Criteria (Pg,Pf in PSF)

Pg: NA Ct: NA CAT: NA
Pf: NA Ce: NA
Lu: NA Cs: NA
Snow Duration: NA

Building Code:
FBC 8th Ed. 2023 Res. HVHZ
TPI Std: 2014
Rep Fac: Varies by Ld Case
FT/RT:20(0)/10(0)
Plate Type(s):
WAVE

Defl/CSI Criteria

PP Deflection in loc L/defl L/#
VERT(LL): 0.234 H 999 360
VERT(CL): 0.422 H 707 240
HORZ(LL): 0.038 F - -
HORZ(TL): 0.070 F - -
Creep Factor: 2.0
Max TC CSI: 0.844
Max BC CSI: 0.332
Max Web CSI: 0.270
Mfg Specified Camber:

VIEW Ver: 23.02.01A.1204.18

▲ Maximum Reactions (lbs)

Loc	Gravity R+	/ R-	/ Rh	Non-Gravity / Rw	/ U	/ RL
U	-	/-	/281	/-	/-	/144
X	3561	/-	/272	/-	/1592	/117
M	3328	/-	/-	/-	/1371	/-
V	-	/-	/253	/-	/-	/26

Wind reactions based on MWFRS
U Brg Wid = 1.5 Min Req = -
X Brg Wid = 8.0 Min Req = 1.5 (Truss)
M Brg Wid = 8.0 Min Req = 1.5 (Truss)
V Brg Wid = 1.5 Min Req = -
Bearings X & L are a rigid surface.

Maximum Top Chord Forces Per Ply (lbs)

Chords	Tens.	Comp.	Chords	Tens.	Comp.
B - D	672	- 1575	H - I	1820	- 4400
A - B	168	- 86	I - J	1482	- 3655
D - E	1538	- 3402	J - K	1470	- 3595
E - F	1602	- 3564	K - L	1492	- 3635
F - G	1877	- 4412	L - M	160	- 34
G - H	1819	- 4399	M - N	145	- 32

Maximum Bot Chord Forces Per Ply (lbs)

Chords	Tens.	Comp.	Chords	Tens.	Comp.
B - C	1632	- 709	Q - P	3468	- 1418
C - S	3143	- 1432	P - O	3468	- 1418
S - R	3393	- 1537	O - L	3350	- 1380
R - Q	4456	- 1913			

Maximum Web Forces Per Ply (lbs)

Webs	Tens.	Comp.	Webs	Tens.	Comp.
A - T	72	- 142	G - Q	96	- 67
T - U	72	- 141	H - Q	240	- 389
B - T	20	- 3	Q - I	1082	- 482
C - D	903	- 1900	I - O	253	- 24
E - S	297	- 125	O - J	139	- 92
F - S	65	- 72	V - W	13	- 127
F - R	1194	- 413	W - M	15	0
R - G	202	- 378	W - N	16	- 124

Lumber

Top chord: 2x4 SP #2;
Bot chord: 2x6 SP M-26;
Webs: 2x4 SP #2;
Lt Slider: 2x4 SP #2; block length = 1.745'
Rt Slider: 2x4 SP #2; block length = 1.750'
Lt Level Return: 2x4 SP #2;
Rt Level Return: 2x4 SP #2;

Nailnote

Nail Schedule:0.128"x3", min. nails
Top Chord: 1 Row @11.25" o.c.
Bot Chord: 1 Row @12.00" o.c.
Webs : 1 Row @ 4" o.c.
Use equal spacing between rows and stagger nails in each row to avoid splitting.

Special Loads

------(Lumber Dur.Fac.=1.25 / Plate Dur.Fac.=1.25)

TC: From	90 plf at	-3.00 to	90 plf at	6.83
TC: From	45 plf at	6.83 to	45 plf at	19.17
TC: From	90 plf at	19.17 to	90 plf at	29.00
BC: From	20 plf at	0.00 to	20 plf at	6.84
BC: From	10 plf at	6.84 to	10 plf at	19.16
BC: From	20 plf at	19.16 to	20 plf at	26.00
PLB: From	4 plf at	-2.96 to	4 plf at	-0.04
PLB: From	4 plf at	26.33 to	4 plf at	28.96

TC: 619 lb Conc. Load at 6.84
TC: 249 lb Conc. Load at 8.90,10.90,12.90,13.10 15.10,17.10,19.16
BC: 488 lb Conc. Load at 6.84
BC: 118 lb Conc. Load at 8.90,10.90,12.90,13.10 15.10,17.10
BC: 622 lb Conc. Load at 19.16

Wind

Wind loads and reactions based on MWFRS.
Left end vertical not exposed to wind pressure.
Wind loading based on both gable and hip roof types.

Additional Notes

The maximum horizontal reaction is 281#
***** BEARING ANALOG MODIFIED! *****

****WARNING**** READ AND FOLLOW ALL NOTES ON THIS DRAWING!
****IMPORTANT**** FURNISH THIS DRAWING TO ALL CONTRACTORS INCLUDING THE INSTALLERS

Trusses require extreme care in fabricating, handling, shipping, installing and bracing. Refer to and follow the latest edition of BCSI (Building Component Safety Information, by TPI and SBCA) for safety practices prior to performing these functions. Installers shall provide temporary bracing per BCSI. Unless noted otherwise, top chord shall have properly attached structural sheathing and bottom chord shall have a properly attached rigid ceiling. Locations shown for permanent lateral restraint of webs shall have continuous lateral restraint (CLR), installed with diagonal bracing installed on the CLR per BCSI sections B3, B7, or B10, as applicable. Apply plates to each face of truss and position as shown above and on the Joint Details, unless noted otherwise. Refer to drawings 160A-Z for standard plate positions. Refer to job's General Notes page for additional information.

Alpine, a division of ITW Building Components Group Inc. shall not be responsible for any deviation from this drawing, any failure to build the truss in conformance with ANSI/TPI 1, or for handling, shipping, installation and bracing of trusses. A seal on this drawing or cover page listing this drawing, indicates acceptance of professional engineering responsibility solely for the design shown. The suitability and use of this drawing for any structure is the responsibility of the Building Designer per ANSI/TPI 1 Sec.2.

For more information see these web sites: Alpine: alpineitw.com; TPI: tpinst.org; SBCA: sbcacomponents.com; ICC: iccsafe.org; AWC: awc.org

SEQN: 204357 / T35 / SPEC FROM:	Ply: 1 Qty: 1 Wgt: 212.8 lbs	**Job Number:** 24070306 7725 RES. **Truss Label:** 3H5G	DRW: ... / ... 07/24/2024

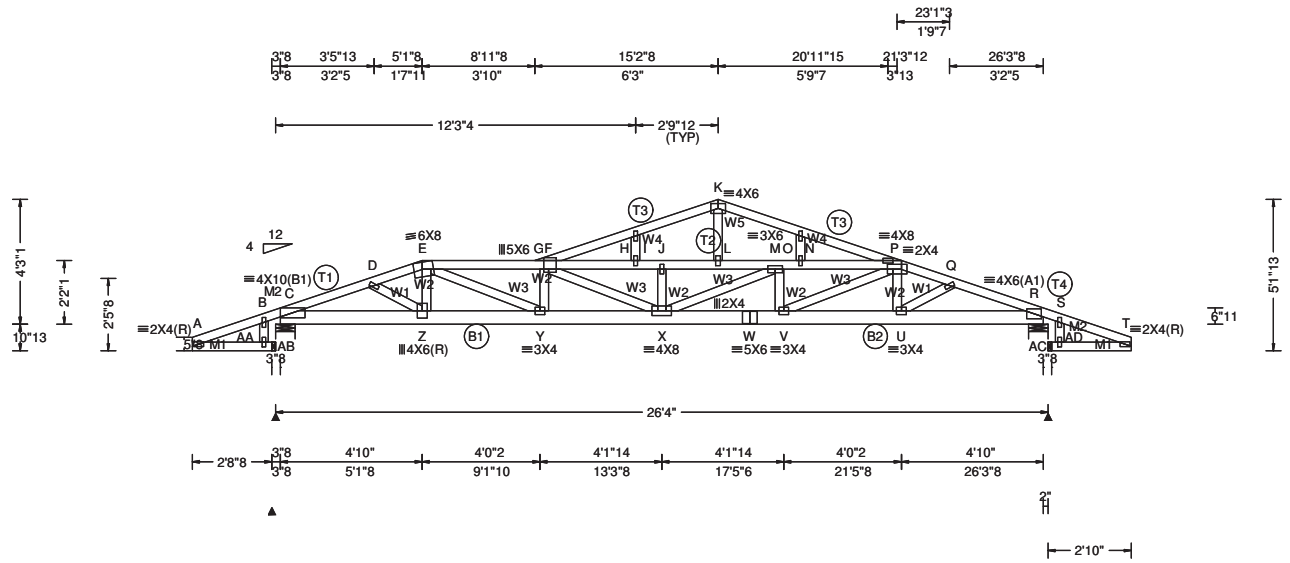

Loading Criteria (psf)

TCLL: 30.00
TCDL: 15.00
BCLL: 0.00
BCDL: 10.00
Des Ld: 55.00
NCBCLL: 10.00
Soffit: 2.00
Load Duration: 1.25
Spacing: 24.0 "

Wind Criteria

Wind Std: ASCE 7-22
Speed: 175 mph
Enclosure: Closed
Risk Category: II
EXP: C Kzt: NA
Mean Height: 15.00 ft
TCDL: 6.0 psf
BCDL: 6.0 psf
MWFRS Parallel Dist: 0 to h/2
C&C Dist a: 3.00 ft
Loc. from endwall: not in 9.00 ft
GCpi: 0.18
Wind Duration: 1.60

Snow Criteria (Pg,Pf in PSF)

Pg: NA Ct: NA CAT: NA
Pf: NA Ce: NA
Lu: NA Cs: NA
Snow Duration: NA

Building Code:
FBC 8th Ed. 2023 Res. HVHZ
TPI Std: 2014
Rep Fac: Varies by Ld Case
FT/RT:20(0)/10(0)
Plate Type(s):
WAVE

Defl/CSI Criteria

PP Deflection in	loc	L/defl	L/#
VERT(LL): 0.326	I	945	360
VERT(CL): 0.587	I	525	240
HORZ(LL): 0.052	E	-	-
HORZ(TL): 0.094	E	-	-

Creep Factor: 2.0
Max TC CSI: 0.950
Max BC CSI: 0.672
Max Web CSI: 0.487
Mfg Specified Camber:

VIEW Ver: 23.02.01A.1204.18

▲ Maximum Reactions (lbs)

Loc	Gravity R+	Gravity / R-	Gravity / Rh	Non-Gravity / Rw	Non-Gravity / U	Non-Gravity / RL
AB	-	/-	/172	/-	/-	/93
B	2926	/-	/205	/-	/972	/30
S	1893	/-	/-	/-	/711	/-
AC	-	/-	/126	/-	/-	/63

Wind reactions based on MWFRS
AB Brg Wid = 1.5 Min Req = -
B Brg Wid = 8.0 Min Req = 2.4 (Truss)
S Brg Wid = 8.0 Min Req = 1.6 (Truss)
AC Brg Wid = 1.5 Min Req = -
Bearings B & R are a rigid surface.

Maximum Top Chord Forces Per Ply (lbs)

Chords	Tens.	Comp.	Chords	Tens.	Comp.
A - B	223	- 119	K - O	617	- 1717
B - C	247	- 131	L - M	1019	- 3143
C - D	1725	- 5489	M - N	759	- 2305
D - E	1703	- 5513	N - P	754	- 2299
E - F	1992	- 6033	O - P	640	- 1777
F - I	1016	- 3143	P - Q	1143	- 3341
G - H	650	- 1805	Q - R	1186	- 3352
H - K	617	- 1716	R - S	204	- 103
I - J	1019	- 3143	S - T	185	- 94
J - L	1019	- 3143			

Maximum Bot Chord Forces Per Ply (lbs)

Chords	Tens.	Comp.	Chords	Tens.	Comp.
C - Z	5164	- 1658	W - V	4007	- 1417
Z - Y	5299	- 1684	V - U	3258	- 1164
Y - X	6149	- 2094	U - R	3140	- 1148
X - W	4007	- 1417			

Maximum Web Forces Per Ply (lbs)

Webs	Tens.	Comp.	Webs	Tens.	Comp.
A -AA	93	- 174	X - M	1159	- 266
B -AA	23	- 7	K - L	582	- 160
AA-AB	93	- 172	M - V	118	- 229
D - Z	242	- 32	V - P	888	- 260
E - Z	1029	- 162	N - O	99	- 157
E - Y	1006	- 405	P - U	150	- 326
Y - F	251	- 444	U - Q	258	- 32
F - X	481	- 1506	AC-AD	63	- 126
H - I	105	- 68	AD- S	19	- 4
J - X	378	- 64	AD- T	66	- 133

Lumber

Top chord: 2x4 SP #2; T1 2x4 SP #1;
Bot chord: 2x6 SP M-26;
Webs: 2x4 SP #2;
Lt Level Return: 2x4 SP #2;
Rt Level Return: 2x4 SP #2;

Special Loads

------(Lumber Dur.Fac.=1.25 / Plate Dur.Fac.=1.25)

TC: From	90 plf at	-3.00 to	90 plf at	29.00
BC: From	20 plf at	0.00 to	20 plf at	26.00
PLB: From	4 plf at	-2.96 to	4 plf at	-0.33
PLB: From	4 plf at	26.33 to	4 plf at	28.96

BC: 1426 lb Conc. Load at 3.60

Plating Notes

All plates are 1.5X4 except as noted.

Wind

Wind loads and reactions based on MWFRS.

Wind loading based on both gable and hip roof types.

Additional Notes

The maximum horizontal reaction is 205#

***** BEARING ANALOG MODIFIED! *****

****WARNING**** READ AND FOLLOW ALL NOTES ON THIS DRAWING!
****IMPORTANT**** FURNISH THIS DRAWING TO ALL CONTRACTORS INCLUDING THE INSTALLERS

Trusses require extreme care in fabricating, handling, shipping, installing and bracing. Refer to and follow the latest edition of BCSI (Building Component Safety Information, by TPI and SBCA) for safety practices prior to performing these functions. Installers shall provide temporary bracing per BCSI. Unless noted otherwise, top chord shall have properly attached structural sheathing and bottom chord shall have a properly attached rigid ceiling. Locations shown for permanent lateral restraint of webs shall have continuous lateral restraint (CLR), installed with diagonal bracing installed on the CLR per BCSI sections B3, B7, or B10, as applicable. Apply plates to each face of truss and position as shown above and on the Joint Details, unless noted otherwise. Refer to drawings 160A-Z for standard plate positions. Refer to job's General Notes page for additional information.

Alpine, a division of ITW Building Components Group Inc. shall not be responsible for any deviation from this drawing, any failure to build the truss in conformance with ANSI/TPI 1, or for handling, shipping, installation and bracing of trusses. A seal on this drawing or cover page listing this drawing, indicates acceptance of professional engineering responsibility solely for the design shown. The suitability and use of this drawing for any structure is the responsibility of the Building Designer per ANSI/TPI 1 Sec.2.

For more information see these web sites: Alpine: alpineitw.com; TPI: tpinst.org; SBCA: sbcacomponents.com; ICC: iccsafe.org; AWC: awc.org

SEQN: 206573 / T57 / HIPS FROM:	Ply: 1 Qty: 1 Wgt: 148.4 lbs	**Job Number:** 24070306 7725 RES. **Truss Label:** 4MH9	DRW: ... / ... 07/24/2024

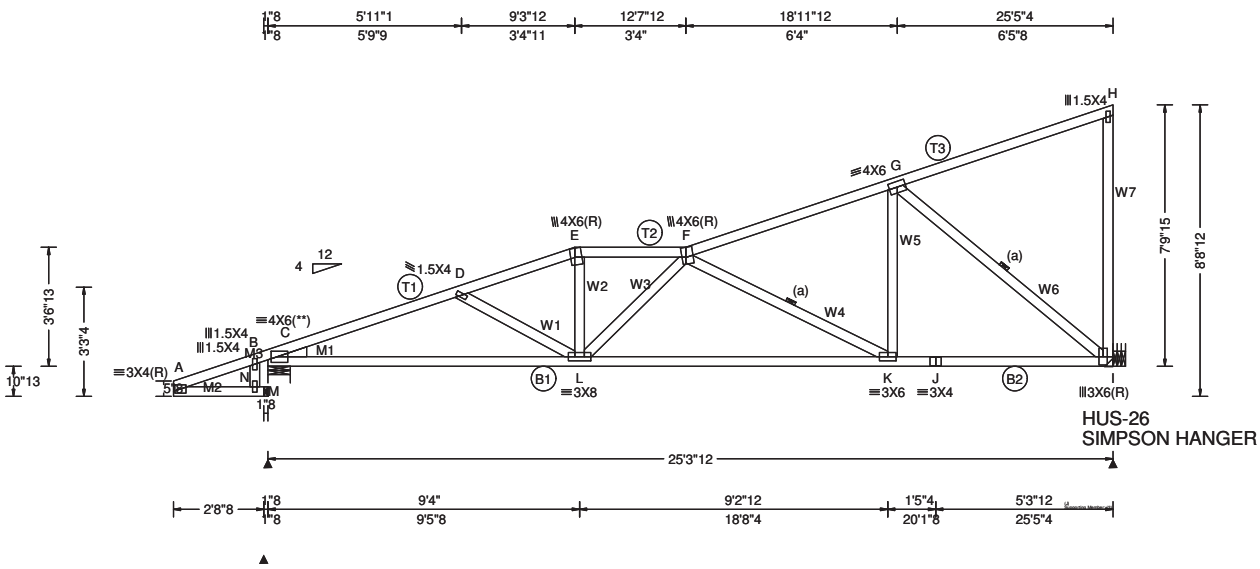

Loading Criteria (psf)

TCLL:	30.00
TCDL:	15.00
BCLL:	0.00
BCDL:	10.00
Des Ld:	55.00
NCBCLL:	10.00
Soffit:	2.00

Load Duration: 1.25
Spacing: 24.0 "

Wind Criteria
Wind Std: ASCE 7-22
Speed: 175 mph
Enclosure: Closed
Risk Category: II
EXP: C Kzt: NA
Mean Height: 15.69 ft
TCDL: 6.0 psf
BCDL: 6.0 psf
MWFRS Parallel Dist: > 2h
C&C Dist a: 3.00 ft
Loc. from endwall: not in 9.00 ft
GCpi: 0.18
Wind Duration: 1.60

Snow Criteria (Pg,Pf in PSF)
Pg: NA Ct: NA CAT: NA
Pf: NA Ce: NA
Lu: NA Cs: NA
Snow Duration: NA

Building Code:
FBC 8th Ed. 2023 Res. HVHZ
TPI Std: 2014
Rep Fac: Yes
FT/RT:20(0)/10(0)
Plate Type(s):
WAVE

Defl/CSI Criteria

PP Deflection in	loc	L/defl	L/#
VERT(LL): 0.167	L	999	360
VERT(CL): 0.300	F	999	240
HORZ(LL): 0.053	I	-	-
HORZ(TL): 0.096	I	-	-

Creep Factor: 2.0
Max TC CSI: 0.773
Max BC CSI: 0.892
Max Web CSI: 0.566
Mfg Specified Camber:

VIEW Ver: 23.02.01A.1204.18

▲ Maximum Reactions (lbs)

Loc	Gravity R+	/ R-	/ Rh	Non-Gravity / Rw	/ U	/ RL
N	-	/-	/269	/-	/-	/280
B	1654	/-	/269	/976	/727	/347
I	1382	/-	/-	/735	/622	/-

Wind reactions based on C&C
N Brg Wid = 1.5 Min Req = -
B Brg Wid = 8.0 Min Req = 2.0 (Truss)
I Brg Wid = - Min Req = -
Bearing B is a rigid surface.

Maximum Top Chord Forces Per Ply (lbs)

Chords	Tens.	Comp.	Chords	Tens.	Comp.
A - B	304	- 241	E - F	1150	- 2500
B - C	334	- 247	F - G	495	- 1531
C - D	1296	- 3052	G - H	72	- 113
D - E	1162	- 2658			

Maximum Bot Chord Forces Per Ply (lbs)

Chords	Tens.	Comp.	Chords	Tens.	Comp.
C - L	2819	- 1584	K - J	1342	- 637
L - K	2666	- 1472	J - I	1342	- 637

Maximum Web Forces Per Ply (lbs)

Webs	Tens.	Comp.	Webs	Tens.	Comp.
A - M	271	- 273	L - F	151	- 240
B - M	56	- 11	F - K	931	- 1460
M - N	280	- 275	K - G	880	- 342
D - L	225	- 398	G - I	826	- 1739
E - L	538	- 72	H - I	129	- 228

Lumber
Top chord: 2x4 SP #2; T3 2x4 SP #1;
Bot chord: 2x4 SP #2;
Webs: 2x4 SP #2;
Lt Wedge: 2x4 SP #2;Lt Level Return: 2x4 SP #2;

Bracing
(a) Continuous lateral restraint equally spaced on member.

Plating Notes
(**) 1 plate(s) require special positioning. Refer to scaled plate plot details for special positioning requirements.

Wind
Member design based on both MWFRS and C&C.
Right end vertical not exposed to wind pressure.
Wind loading based on both gable and hip roof types.

Additional Notes
The maximum horizontal reaction is 269#
***** BEARING ANALOG MODIFIED! *****

****WARNING**** READ AND FOLLOW ALL NOTES ON THIS DRAWING!
****IMPORTANT**** FURNISH THIS DRAWING TO ALL CONTRACTORS INCLUDING THE INSTALLERS
Trusses require extreme care in fabricating, handling, shipping, installing and bracing. Refer to and follow the latest edition of BCSI (Building Component Safety Information, by TPI and SBCA) for safety practices prior to performing these functions. Installers shall provide temporary bracing per BCSI. Unless noted otherwise, top chord shall have properly attached structural sheathing and bottom chord shall have a properly attached rigid ceiling. Locations shown for permanent lateral restraint of webs shall have continuous lateral restraint (CLR), installed with diagonal bracing installed on the CLR per BCSI sections B3, B7, or B10, as applicable. Apply plates to each face of truss and position as shown above and on the Joint Details, unless noted otherwise. Refer to drawings 160A-Z for standard plate positions. Refer to job's General Notes page for additional information.
Alpine, a division of ITW Building Components Group Inc. shall not be responsible for any deviation from this drawing, any failure to build the truss in conformance with ANSI/TPI 1, or for handling, shipping, installation and bracing of trusses. A seal on this drawing or cover page listing this drawing, indicates acceptance of professional engineering responsibility solely for the design shown. The suitability and use of this drawing for any structure is the responsibility of the Building Designer per ANSI/TPI 1 Sec.2.
For more information see these web sites: Alpine: alpineitw.com; TPI: tpinst.org; SBCA: sbcacomponents.com; ICC: iccsafe.org; AWC: awc.org

SEQN: 206576 / T16 / HIPS FROM:	Ply: 1 Qty: 2 Wgt: 151.2 lbs	**Job Number:** 24070306 7725 RES. **Truss Label:** 4MH7	DRW: ... / ... 07/24/2024

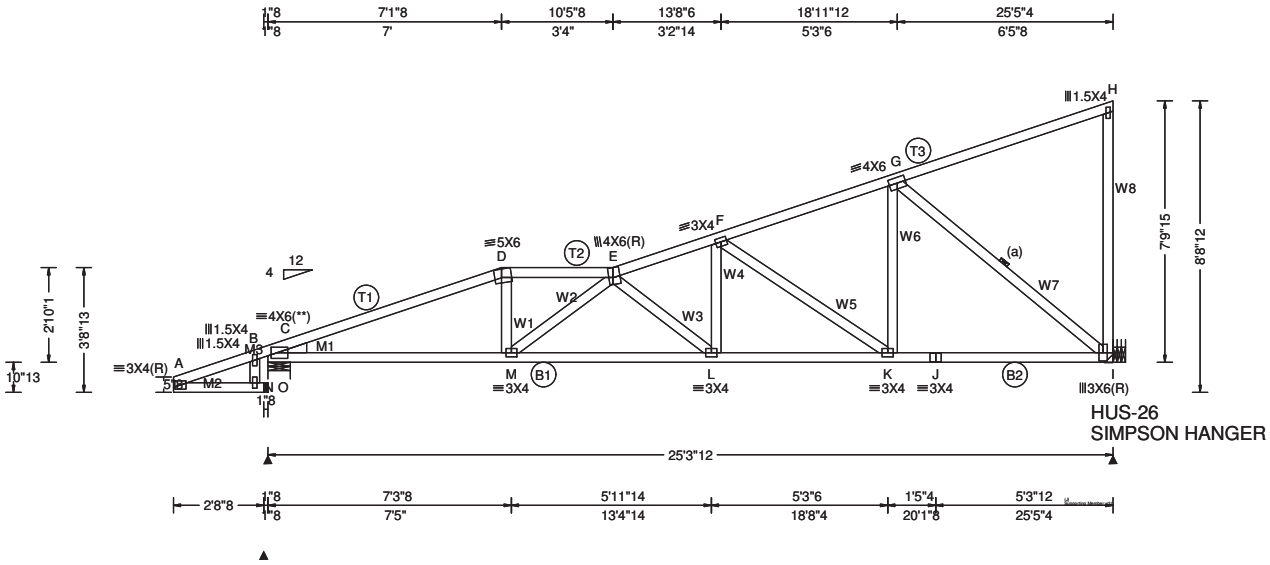

Loading Criteria (psf)

TCLL:	30.00
TCDL:	15.00
BCLL:	0.00
BCDL:	10.00
Des Ld:	55.00
NCBCLL:	10.00
Soffit:	2.00

Load Duration: 1.25
Spacing: 24.0 "

Wind Criteria
Wind Std: ASCE 7-22
Speed: 175 mph
Enclosure: Closed
Risk Category: II
EXP: C Kzt: NA
Mean Height: 15.69 ft
TCDL: 6.0 psf
BCDL: 6.0 psf
MWFRS Parallel Dist: > 2h
C&C Dist a: 3.00 ft
Loc. from endwall: not in 9.00 ft
GCpi: 0.18
Wind Duration: 1.60

Snow Criteria (Pg,Pf in PSF)
Pg: NA Ct: NA CAT: NA
Pf: NA Ce: NA
Lu: NA Cs: NA
Snow Duration: NA

Building Code:
FBC 8th Ed. 2023 Res. HVHZ
TPI Std: 2014
Rep Fac: Yes
FT/RT:20(0)/10(0)
Plate Type(s):
WAVE

Defl/CSI Criteria

PP Deflection in	loc	L/defl	L/#
VERT(LL): 0.185	E	999	360
VERT(CL): 0.333	E	908	240
HORZ(LL): 0.054	I	-	-
HORZ(TL): 0.097	I	-	-

Creep Factor: 2.0
Max TC CSI: 0.931
Max BC CSI: 0.844
Max Web CSI: 0.910
Mfg Specified Camber:

VIEW Ver: 23.02.01A.1204.18

▲ Maximum Reactions (lbs)

Loc	Gravity R+	Gravity / R-	Gravity / Rh	Non-Gravity / Rw	Non-Gravity / U	Non-Gravity / RL
O	-	/-	/265	/-	/-	/267
B	1656	/-	/265	/975	/722	/394
I	1381	/-	/-	/770	/573	/-

Wind reactions based on C&C
O Brg Wid = 1.5 Min Req = -
B Brg Wid = 8.0 Min Req = 2.0 (Truss)
I Brg Wid = - Min Req = -
Bearing B is a rigid surface.

Maximum Top Chord Forces Per Ply (lbs)

Chords	Tens.	Comp.	Chords	Tens.	Comp.
A - B	301	- 228	E - F	965	- 2655
B - C	330	- 232	F - G	438	- 1495
C - D	1293	- 2986	G - H	75	- 111
D - E	1285	- 2800			

Maximum Bot Chord Forces Per Ply (lbs)

Chords	Tens.	Comp.	Chords	Tens.	Comp.
C - M	2744	- 1569	K - J	1321	- 574
M - L	3263	- 1686	J - I	1321	- 574
L - K	2432	- 1138			

Maximum Web Forces Per Ply (lbs)

Webs	Tens.	Comp.	Webs	Tens.	Comp.
A - N	257	- 265	L - F	780	- 396
B - N	55	- 9	F - K	676	- 1315
N - O	264	- 267	K - G	906	- 309
D - M	495	- 29	G - I	744	- 1712
M - E	201	- 612	H - I	132	- 236
E - L	689	- 1027			

Lumber
Top chord: 2x4 SP #2;
Bot chord: 2x4 SP #2;
Webs: 2x4 SP #2;
Lt Wedge: 2x4 SP #2;Lt Level Return: 2x4 SP #2;

Bracing
(a) Continuous lateral restraint equally spaced on member.

Plating Notes
(**) 1 plate(s) require special positioning. Refer to scaled plate plot details for special positioning requirements.

Wind
Member design based on both MWFRS and C&C.
Right end vertical not exposed to wind pressure.
Wind loading based on both gable and hip roof types.

Additional Notes
The maximum horizontal reaction is 265#
***** BEARING ANALOG MODIFIED! *****

****WARNING**** READ AND FOLLOW ALL NOTES ON THIS DRAWING!
****IMPORTANT**** FURNISH THIS DRAWING TO ALL CONTRACTORS INCLUDING THE INSTALLERS
Trusses require extreme care in fabricating, handling, shipping, installing and bracing. Refer to and follow the latest edition of BCSI (Building Component Safety Information, by TPI and SBCA) for safety practices prior to performing these functions. Installers shall provide temporary bracing per BCSI. Unless noted otherwise, top chord shall have properly attached structural sheathing and bottom chord shall have a properly attached rigid ceiling. Locations shown for permanent lateral restraint of webs shall have continuous lateral restraint (CLR), installed with diagonal bracing installed on the CLR per BCSI sections B3, B7, or B10, as applicable. Apply plates to each face of truss and position as shown above and on the Joint Details, unless noted otherwise. Refer to drawings 160A-Z for standard plate positions. Refer to job's General Notes page for additional information.
Alpine, a division of ITW Building Components Group Inc. shall not be responsible for any deviation from this drawing, any failure to build the truss in conformance with ANSI/TPI 1, or for handling, shipping, installation and bracing of trusses. A seal on this drawing or cover page listing this drawing, indicates acceptance of professional engineering responsibility solely for the design shown. The suitability and use of this drawing for any structure is the responsibility of the Building Designer per ANSI/TPI 1 Sec.2.
For more information see these web sites: Alpine: alpineitw.com; TPI: tpinst.org; SBCA: sbcacomponents.com; ICC: iccsafe.org; AWC: awc.org

SEQN: 206579 / T69 / HIPS FROM:	Ply: 1 Qty: 2 Wgt: 152.6 lbs	**Job Number:** 24070306 7725 RES. **Truss Label:** 4MH5	DRW: ... / ... 07/24/2024

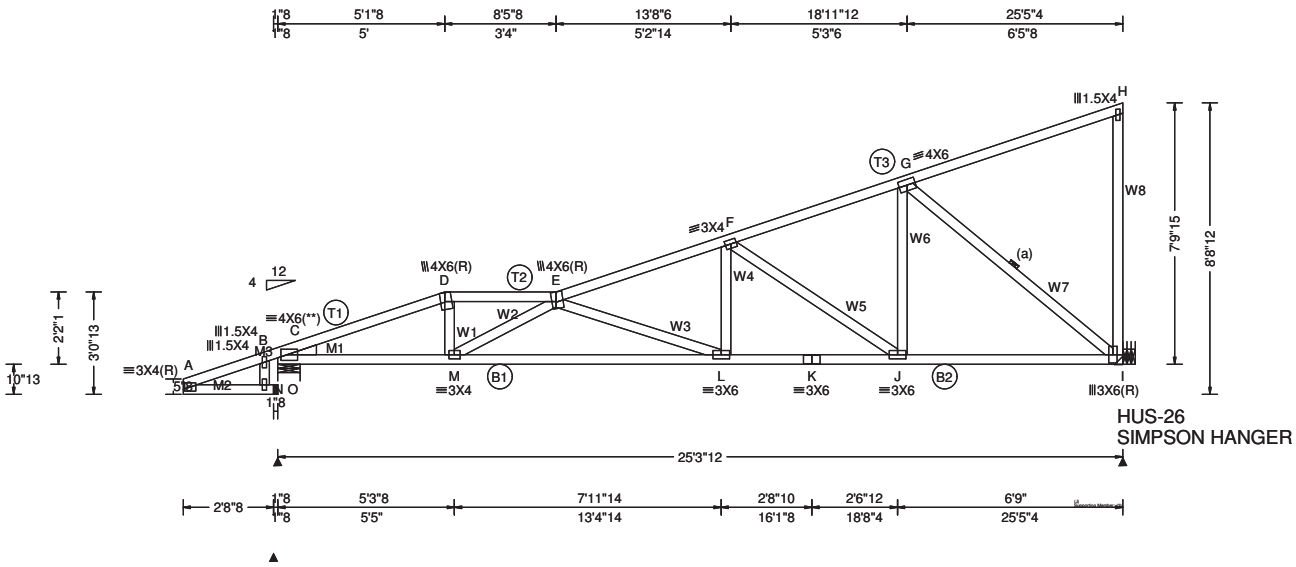

Loading Criteria (psf)

TCLL:	30.00
TCDL:	15.00
BCLL:	0.00
BCDL:	10.00
Des Ld:	55.00
NCBCLL:	10.00
Soffit:	2.00

Load Duration: 1.25
Spacing: 24.0 "

Wind Criteria
Wind Std: ASCE 7-22
Speed: 175 mph
Enclosure: Closed
Risk Category: II
EXP: C Kzt: NA
Mean Height: 15.69 ft
TCDL: 6.0 psf
BCDL: 6.0 psf
MWFRS Parallel Dist: > 2h
C&C Dist a: 3.00 ft
Loc. from endwall: not in 9.00 ft
GCpi: 0.18
Wind Duration: 1.60

Snow Criteria (Pg,Pf in PSF)
Pg: NA Ct: NA CAT: NA
Pf: NA Ce: NA
Lu: NA Cs: NA
Snow Duration: NA

Building Code:
FBC 8th Ed. 2023 Res. HVHZ
TPI Std: 2014
Rep Fac: Yes
FT/RT:20(0)/10(0)
Plate Type(s):
WAVE

Defl/CSI Criteria

PP Deflection in	loc	L/defl	L/#
VERT(LL): 0.222	E	999	360
VERT(CL): 0.400	E	755	240
HORZ(LL): -0.061	H	-	-
HORZ(TL): 0.110	H	-	-

Creep Factor: 2.0
Max TC CSI: 0.890
Max BC CSI: 0.810
Max Web CSI: 0.945
Mfg Specified Camber:

VIEW Ver: 23.02.01A.1204.18

▲ Maximum Reactions (lbs)

Loc	Gravity R+	Gravity / R-	/ Rh	Non-Gravity / Rw	/ U	/ RL
O	-	/-	/272	/-	/-	/278
B	1655	/-	/272	/972	/743	/403
I	1382	/-	/-	/807	/546	/-

Wind reactions based on C&C
O Brg Wid = 1.5 Min Req = -
B Brg Wid = 8.0 Min Req = 2.0 (Truss)
I Brg Wid = - Min Req = -
Bearing B is a rigid surface.

Maximum Top Chord Forces Per Ply (lbs)

Chords	Tens.	Comp.	Chords	Tens.	Comp.
A - B	307	- 211	E - F	855	- 2723
B - C	337	- 212	F - G	403	- 1497
C - D	1322	- 3085	G - H	75	- 110
D - E	1309	- 2965			

Maximum Bot Chord Forces Per Ply (lbs)

Chords	Tens.	Comp.	Chords	Tens.	Comp.
C - M	2853	- 1614	K - J	2469	- 1056
M - L	4038	- 2013	J - I	1317	- 540
L - K	2469	- 1056			

Maximum Web Forces Per Ply (lbs)

Webs	Tens.	Comp.	Webs	Tens.	Comp.
A - N	238	- 275	L - F	726	- 286
B - N	56	- 7	F - J	619	- 1365
N - O	243	- 278	J - G	922	- 280
D - M	732	- 123	G - I	699	- 1707
M - E	487	- 1270	H - I	134	- 238
E - L	1003	- 1624			

Lumber
Top chord: 2x4 SP #2;
Bot chord: 2x4 SP #1; B2 2x4 SP #2;
Webs: 2x4 SP #2;
Lt Wedge: 2x4 SP #2;Lt Level Return: 2x4 SP #2;

Bracing
(a) Continuous lateral restraint equally spaced on member.

Plating Notes
(**) 1 plate(s) require special positioning. Refer to scaled plate plot details for special positioning requirements.

Wind
Member design based on both MWFRS and C&C.
Right end vertical not exposed to wind pressure.
Wind loading based on both gable and hip roof types.

Additional Notes
The maximum horizontal reaction is 272#
***** BEARING ANALOG MODIFIED! *****

****WARNING**** READ AND FOLLOW ALL NOTES ON THIS DRAWING!
****IMPORTANT**** FURNISH THIS DRAWING TO ALL CONTRACTORS INCLUDING THE INSTALLERS
Trusses require extreme care in fabricating, handling, shipping, installing and bracing. Refer to and follow the latest edition of BCSI (Building Component Safety Information, by TPI and SBCA) for safety practices prior to performing these functions. Installers shall provide temporary bracing per BCSI. Unless noted otherwise, top chord shall have properly attached structural sheathing and bottom chord shall have a properly attached rigid ceiling. Locations shown for permanent lateral restraint of webs shall have continuous lateral restraint (CLR), installed with diagonal bracing installed on the CLR per BCSI sections B3, B7, or B10, as applicable. Apply plates to each face of truss and position as shown above and on the Joint Details, unless noted otherwise. Refer to drawings 160A-Z for standard plate positions. Refer to job's General Notes page for additional information.
Alpine, a division of ITW Building Components Group Inc. shall not be responsible for any deviation from this drawing, any failure to build the truss in conformance with ANSI/TPI 1, or for handling, shipping, installation and bracing of trusses. A seal on this drawing or cover page listing this drawing, indicates acceptance of professional engineering responsibility solely for the design shown. The suitability and use of this drawing for any structure is the responsibility of the Building Designer per ANSI/TPI 1 Sec.2.
For more information see these web sites: Alpine: alpineitw.com; TPI: tpinst.org; SBCA: sbcacomponents.com; ICC: iccsafe.org; AWC: awc.org

SEQN: 139607 / T58 / HIPS FROM:	Ply: 1 Qty: 2 Wgt: 197.4 lbs	**Job Number:** 24070306 7725 RES. **Truss Label:** 4MH3G	DRW: ... / ... 07/24/2024

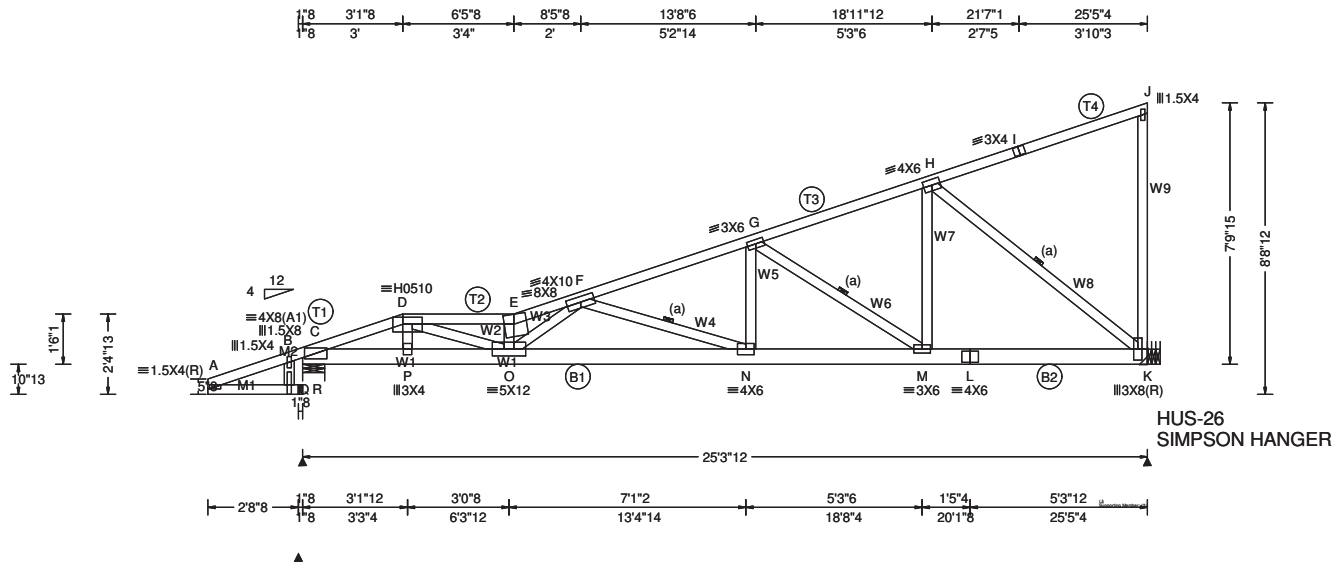

Loading Criteria (psf)

TCLL: 30.00
TCDL: 15.00
BCLL: 0.00
BCDL: 10.00
Des Ld: 55.00
NCBCLL: 10.00
Soffit: 2.00
Load Duration: 1.25
Spacing: 24.0 "

Wind Criteria

Wind Std: ASCE 7-22
Speed: 175 mph
Enclosure: Closed
Risk Category: II
EXP: C Kzt: NA
Mean Height: 15.69 ft
TCDL: 6.0 psf
BCDL: 6.0 psf
MWFRS Parallel Dist: 0 to h/2
C&C Dist a: 3.00 ft
Loc. from endwall: not in 9.00 ft
GCpi: 0.18
Wind Duration: 1.60

Snow Criteria (Pg,Pf in PSF)

Pg: NA Ct: NA CAT: NA
Pf: NA Ce: NA
Lu: NA Cs: NA
Snow Duration: NA

Building Code:
FBC 8th Ed. 2023 Res. HVHZ
TPI Std: 2014
Rep Fac: Varies by Ld Case
FT/RT:20(0)/10(0)
Plate Type(s):
WAVE, HS

Defl/CSI Criteria

PP Deflection in loc L/defl L/#
VERT(LL): 0.301 E 999 360
VERT(CL): 0.554 E 545 240
HORZ(LL): -0.115 J - -
HORZ(TL): 0.209 J - -
Creep Factor: 2.0
Max TC CSI: 0.935
Max BC CSI: 0.468
Max Web CSI: 0.596
Mfg Specified Camber:

VIEW Ver: 23.02.01A.1204.18

▲ Maximum Reactions (lbs)

Loc	Gravity R+	Gravity / R-	Gravity / Rh	Non-Gravity / Rw	Non-Gravity / U	Non-Gravity / RL
R	-	/-279	/-	/54	/-	/-
B	2667	/-	/-	/-	/872	/-
K	1484	/-	/-	/-	/540	/-

Wind reactions based on MWFRS
R Brg Wid = 1.5 Min Req = -
B Brg Wid = 8.0 Min Req = 2.2 (Truss)
K Brg Wid = - Min Req = -
Bearing B is a rigid surface.

Maximum Top Chord Forces Per Ply (lbs)

Chords	Tens.	Comp.	Chords	Tens.	Comp.
A - B	81	- 43	F - G	1120	- 3184
B - C	150	- 59	G - H	606	- 1654
C - D	1419	- 4974	H - I	64	- 111
D - E	2121	- 6773	I - J	74	- 43
E - F	2342	- 7447			

Maximum Bot Chord Forces Per Ply (lbs)

Chords	Tens.	Comp.	Chords	Tens.	Comp.
C - P	4661	- 1316	N - M	2880	- 1006
P - O	4737	- 1321	M - L	1460	- 529
O - N	5111	- 1742	L - K	1460	- 529

Maximum Web Forces Per Ply (lbs)

Webs	Tens.	Comp.	Webs	Tens.	Comp.
A - Q	11	- 29	F - N	764	- 2294
B - Q	319	- 58	N - G	1006	- 236
Q - R	0	0	G - M	568	- 1672
D - P	588	- 32	M - H	1062	- 250
D - O	2226	- 849	H - K	681	- 1881
O - E	809	- 2428	J - K	135	- 235
O - F	2583	- 633			

Lumber

Top chord: 2x4 SP #1; T4 2x4 SP #2;
Bot chord: 2x6 SP M-26;
Webs: 2x4 SP #2;
Lt Level Return: 2x4 SP #2;

Bracing

(a) Continuous lateral restraint equally spaced on member.

Special Loads

------(Lumber Dur.Fac.=1.25 / Plate Dur.Fac.=1.25)

TC: From	90 plf at	-2.83 to	90 plf at	25.31
BC: From	20 plf at	0.00 to	20 plf at	2.96
BC: From	10 plf at	2.96 to	10 plf at	3.27
BC: From	20 plf at	3.27 to	20 plf at	25.31
PLB: From	4 plf at	-2.79 to	4 plf at	-0.17

TC: 53 lb Conc. Load at 2.96
BC: 62 lb Conc. Load at 2.96
BC: 772 lb Conc. Load at 3.27

Wind

Wind loads and reactions based on MWFRS.

Right end vertical not exposed to wind pressure.

Wind loading based on both gable and hip roof types.

Additional Notes

Negative reaction(s) of -279# MAX. from a non-wind load case requires uplift connection. See Maximum Reactions.

****WARNING**** READ AND FOLLOW ALL NOTES ON THIS DRAWING!
****IMPORTANT**** FURNISH THIS DRAWING TO ALL CONTRACTORS INCLUDING THE INSTALLERS

Trusses require extreme care in fabricating, handling, shipping, installing and bracing. Refer to and follow the latest edition of BCSI (Building Component Safety Information, by TPI and SBCA) for safety practices prior to performing these functions. Installers shall provide temporary bracing per BCSI. Unless noted otherwise, top chord shall have properly attached structural sheathing and bottom chord shall have a properly attached rigid ceiling. Locations shown for permanent lateral restraint of webs shall have continuous lateral restraint (CLR), installed with diagonal bracing installed on the CLR per BCSI sections B3, B7, or B10, as applicable. Apply plates to each face of truss and position as shown above and on the Joint Details, unless noted otherwise. Refer to drawings 160A-Z for standard plate positions. Refer to job's General Notes page for additional information.

Alpine, a division of ITW Building Components Group Inc. shall not be responsible for any deviation from this drawing, any failure to build the truss in conformance with ANSI/TPI 1, or for handling, shipping, installation and bracing of trusses. A seal on this drawing or cover page listing this drawing, indicates acceptance of professional engineering responsibility solely for the design shown. The suitability and use of this drawing for any structure is the responsibility of the Building Designer per ANSI/TPI 1 Sec.2.

For more information see these web sites: Alpine: alpineitw.com; TPI: tpinst.org; SBCA: sbcacomponents.com; ICC: iccsafe.org; AWC: awc.org

SEQN: 206582 / T45 / SPEC FROM:	Ply: 1 Qty: 1 Wgt: 134.4 lbs	**Job Number:** 24070306 7725 RES. **Truss Label:** 4MH9A	DRW: ... / ... 07/24/2024

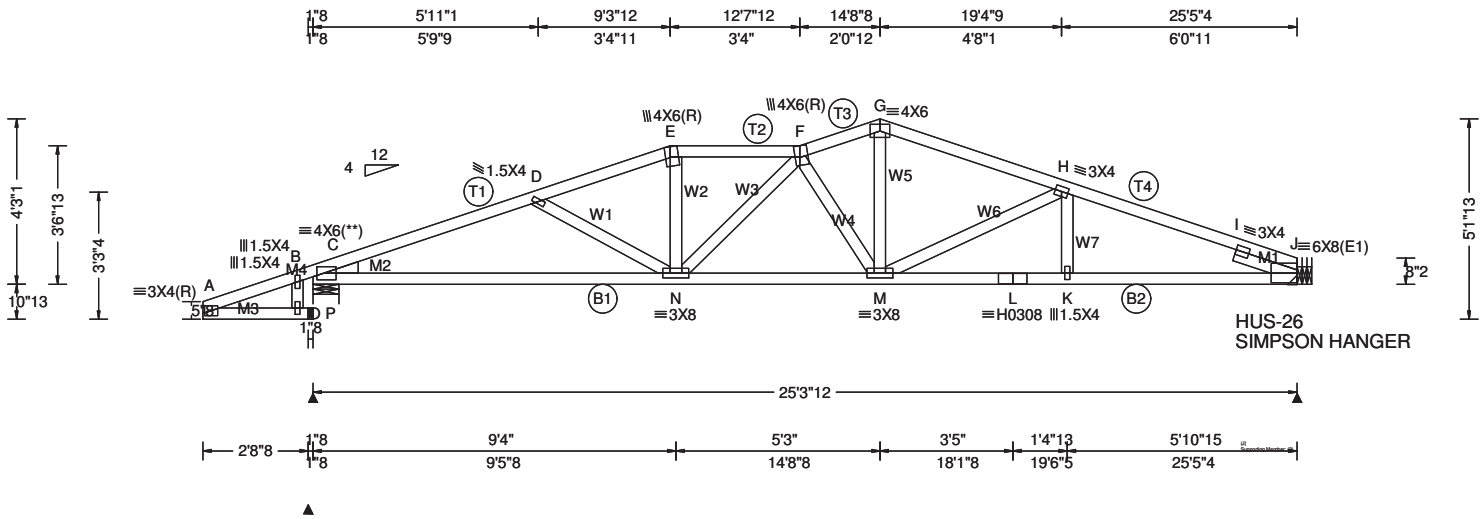

Loading Criteria (psf)

TCLL:	30.00
TCDL:	15.00
BCLL:	0.00
BCDL:	10.00
Des Ld:	55.00
NCBCLL:	10.00
Soffit:	2.00

Load Duration: 1.25
Spacing: 24.0 "

Wind Criteria
Wind Std: ASCE 7-22
Speed: 175 mph
Enclosure: Closed
Risk Category: II
EXP: C Kzt: NA
Mean Height: 15.00 ft
TCDL: 6.0 psf
BCDL: 6.0 psf
MWFRS Parallel Dist: > 2h
C&C Dist a: 3.00 ft
Loc. from endwall: not in 9.00 ft
GCpi: 0.18
Wind Duration: 1.60

Snow Criteria (Pg,Pf in PSF)
Pg: NA Ct: NA CAT: NA
Pf: NA Ce: NA
Lu: NA Cs: NA
Snow Duration: NA

Building Code:
FBC 8th Ed. 2023 Res. HVHZ
TPI Std: 2014
Rep Fac: Yes
FT/RT:20(0)/10(0)
Plate Type(s):
WAVE, HS

Defl/CSI Criteria

PP Deflection in	loc	L/defl	L/#
VERT(LL): 0.189	F	999	360
VERT(CL): 0.341	F	887	240
HORZ(LL): 0.058	J	-	-
HORZ(TL): 0.105	J	-	-

Creep Factor: 2.0
Max TC CSI: 0.635
Max BC CSI: 0.906
Max Web CSI: 0.313
Mfg Specified Camber:

VIEW Ver: 23.02.01A.1204.18

▲ Maximum Reactions (lbs)

Loc	Gravity R+	Gravity / R-	Non-Gravity / Rh	Non-Gravity / Rw	Non-Gravity / U	Non-Gravity / RL
P	-	/-	/255	/-	/-	/282
B	1655	/-	/255	/913	/799	/198
J	1382	/-	/-	/711	/576	/-

Wind reactions based on C&C
P Brg Wid = 1.5 Min Req = -
B Brg Wid = 8.0 Min Req = 2.0 (Truss)
J Brg Wid = - Min Req = -
Bearing B is a rigid surface.

Maximum Top Chord Forces Per Ply (lbs)

Chords	Tens.	Comp.	Chords	Tens.	Comp.
A - B	292	- 243	F - G	1263	- 2313
B - C	321	- 249	G - H	1243	- 2372
C - D	1476	- 3035	H - I	1349	- 2970
D - E	1371	- 2644	I - J	1338	- 3022
E - F	1340	- 2486			

Maximum Bot Chord Forces Per Ply (lbs)

Chords	Tens.	Comp.	Chords	Tens.	Comp.
C - N	2803	- 1348	L - K	2750	- 1210
N - M	2646	- 1314	K - J	2754	- 1207
M - L	2750	- 1210			

Maximum Web Forces Per Ply (lbs)

Webs	Tens.	Comp.	Webs	Tens.	Comp.
A - O	273	- 256	N - F	207	- 234
B - O	54	- 11	F - M	615	- 876
O - P	282	- 258	G - M	1129	- 580
D - N	215	- 394	M - H	232	- 640
E - N	489	- 118	H - K	186	0

Lumber
Top chord: 2x4 SP #2;
Bot chord: 2x4 SP #2;
Webs: 2x4 SP #2;
Rt Slider: 2x4 SP #2; block length = 1.672'
Lt Wedge: 2x4 SP #2;Lt Level Return: 2x4 SP #2;

Plating Notes
(**) 1 plate(s) require special positioning. Refer to scaled plate plot details for special positioning requirements.

Wind
Member design based on both MWFRS and C&C.
Wind loading based on both gable and hip roof types.

Additional Notes
The maximum horizontal reaction is 255#
***** BEARING ANALOG MODIFIED! *****

****WARNING**** READ AND FOLLOW ALL NOTES ON THIS DRAWING!
****IMPORTANT**** FURNISH THIS DRAWING TO ALL CONTRACTORS INCLUDING THE INSTALLERS
Trusses require extreme care in fabricating, handling, shipping, installing and bracing. Refer to and follow the latest edition of BCSI (Building Component Safety Information, by TPI and SBCA) for safety practices prior to performing these functions. Installers shall provide temporary bracing per BCSI. Unless noted otherwise, top chord shall have properly attached structural sheathing and bottom chord shall have a properly attached rigid ceiling. Locations shown for permanent lateral restraint of webs shall have continuous lateral restraint (CLR), installed with diagonal bracing installed on the CLR per BCSI sections B3, B7, or B10, as applicable. Apply plates to each face of truss and position as shown above and on the Joint Details, unless noted otherwise. Refer to drawings 160A-Z for standard plate positions. Refer to job's General Notes page for additional information.
Alpine, a division of ITW Building Components Group Inc. shall not be responsible for any deviation from this drawing, any failure to build the truss in conformance with ANSI/TPI 1, or for handling, shipping, installation and bracing of trusses. A seal on this drawing or cover page listing this drawing, indicates acceptance of professional engineering responsibility solely for the design shown. The suitability and use of this drawing for any structure is the responsibility of the Building Designer per ANSI/TPI 1 Sec.2.
For more information see these web sites: Alpine: alpineitw.com; TPI: tpinst.org; SBCA: sbcacomponents.com; ICC: iccsafe.org; AWC: awc.org

SEQN: 139482 / T91 / SPEC FROM:	Ply: 1 Qty: 2 Wgt: 133.0 lbs	**Job Number:** 24070306 7725 RES. **Truss Label:** 4MH7A	DRW: ... / ... 07/24/2024

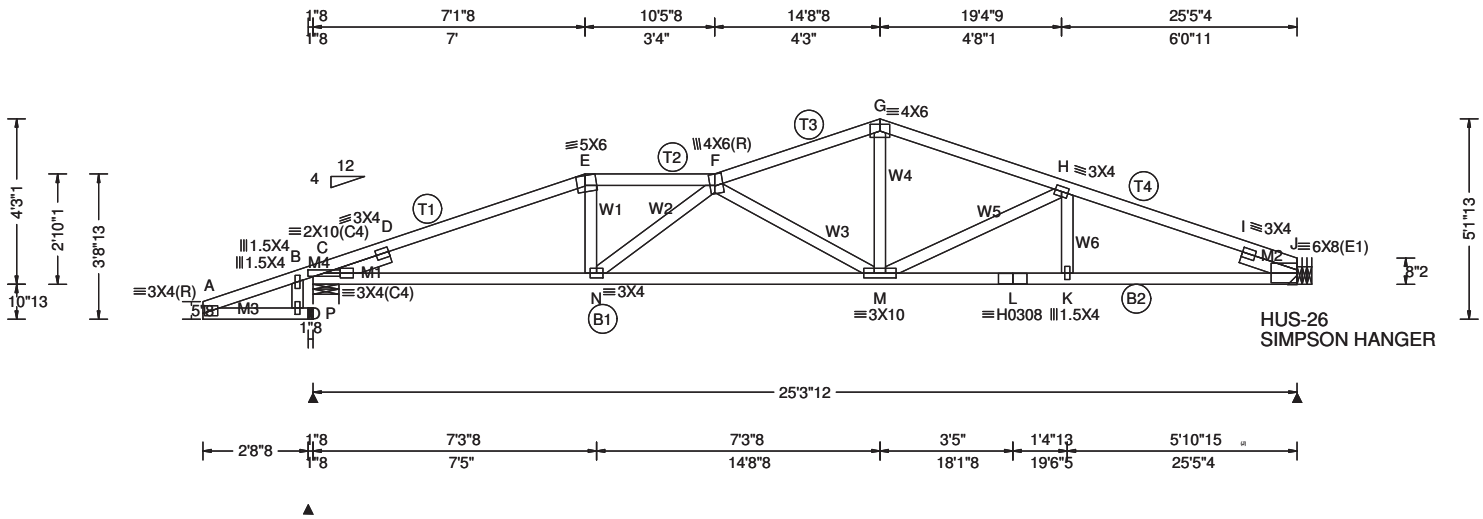

Loading Criteria (psf)

TCLL: 30.00
TCDL: 15.00
BCLL: 0.00
BCDL: 10.00
Des Ld: 55.00
NCBCLL: 10.00
Soffit: 2.00
Load Duration: 1.25
Spacing: 24.0 "

Wind Criteria

Wind Std: ASCE 7-22
Speed: 175 mph
Enclosure: Closed
Risk Category: II
EXP: C Kzt: NA
Mean Height: 15.00 ft
TCDL: 6.0 psf
BCDL: 6.0 psf
MWFRS Parallel Dist: > 2h
C&C Dist a: 3.00 ft
Loc. from endwall: not in 9.00 ft
GCpi: 0.18
Wind Duration: 1.60

Snow Criteria (Pg,Pf in PSF)

Pg: NA Ct: NA CAT: NA
Pf: NA Ce: NA
Lu: NA Cs: NA
Snow Duration: NA

Building Code:
FBC 8th Ed. 2023 Res. HVHZ
TPI Std: 2014
Rep Fac: Yes
FT/RT:20(0)/10(0)
Plate Type(s):
WAVE, HS

Defl/CSI Criteria

PP Deflection in loc L/defl L/#
VERT(LL): 0.193 F 999 360
VERT(CL): 0.348 F 861 240
HORZ(LL): 0.058 J - -
HORZ(TL): 0.105 J - -
Creep Factor: 2.0
Max TC CSI: 0.672
Max BC CSI: 0.843
Max Web CSI: 0.523
Mfg Specified Camber:

VIEW Ver: 23.02.01A.1204.18

▲ Maximum Reactions (lbs)

Loc	Gravity R+	/ R-	/ Rh	Non-Gravity / Rw	/ U	/ RL
P	-	/-	/235	/-	/-	/234
C	1670	/-	/235	/917	/810	/185
J	1367	/-	/-	/743	/517	/-

Wind reactions based on C&C
P Brg Wid = 1.5 Min Req = -
C Brg Wid = 8.0 Min Req = 2.0 (Truss)
J Brg Wid = - Min Req = -
Bearing C is a rigid surface.

Maximum Top Chord Forces Per Ply (lbs)

Chords	Tens.	Comp.	Chords	Tens.	Comp.
A - B	276	- 203	F - G	1085	- 2329
B - C	278	- 189	G - H	1070	- 2347
C - D	1562	- 3200	H - I	1195	- 2931
D - E	1420	- 2893	I - J	1185	- 2979
E - F	1410	- 2727			

Maximum Bot Chord Forces Per Ply (lbs)

Chords	Tens.	Comp.	Chords	Tens.	Comp.
C - N	2671	- 1283	L - K	2709	- 1065
N - M	3196	- 1494	K - J	2712	- 1062
M - L	2709	- 1065			

Maximum Web Forces Per Ply (lbs)

Webs	Tens.	Comp.	Webs	Tens.	Comp.
A - O	229	- 232	F - M	810	- 1208
B - O	51	- 7	G - M	1028	- 450
O - P	234	- 235	M - H	253	- 616
E - N	501	- 111	H - K	164	0
N - F	361	- 623			

Lumber

Top chord: 2x4 SP #2;
Bot chord: 2x4 SP #2;
Webs: 2x4 SP #2;
Lt Slider: 2x4 SP #2; block length = 1.750'
Rt Slider: 2x4 SP #2; block length = 1.500'
Lt Level Return: 2x4 SP #2;

Wind

Member design based on both MWFRS and C&C.

Wind loading based on both gable and hip roof types.

Additional Notes

The maximum horizontal reaction is 235#

***** BEARING ANALOG MODIFIED! *****

****WARNING**** READ AND FOLLOW ALL NOTES ON THIS DRAWING!
****IMPORTANT**** FURNISH THIS DRAWING TO ALL CONTRACTORS INCLUDING THE INSTALLERS
Trusses require extreme care in fabricating, handling, shipping, installing and bracing. Refer to and follow the latest edition of BCSI (Building Component Safety Information, by TPI and SBCA) for safety practices prior to performing these functions. Installers shall provide temporary bracing per BCSI. Unless noted otherwise, top chord shall have properly attached structural sheathing and bottom chord shall have a properly attached rigid ceiling. Locations shown for permanent lateral restraint of webs shall have continuous lateral restraint (CLR), installed with diagonal bracing installed on the CLR per BCSI sections B3, B7, or B10, as applicable. Apply plates to each face of truss and position as shown above and on the Joint Details, unless noted otherwise. Refer to drawings 160A-Z for standard plate positions. Refer to job's General Notes page for additional information.
Alpine, a division of ITW Building Components Group Inc. shall not be responsible for any deviation from this drawing, any failure to build the truss in conformance with ANSI/TPI 1, or for handling, shipping, installation and bracing of trusses. A seal on this drawing or cover page listing this drawing, indicates acceptance of professional engineering responsibility solely for the design shown. The suitability and use of this drawing for any structure is the responsibility of the Building Designer per ANSI/TPI 1 Sec.2.
For more information see these web sites: Alpine: alpineitw.com; TPI: tpinst.org; SBCA: sbcacomponents.com; ICC: iccsafe.org; AWC: awc.org

SEQN: 204749 / T94 / SPEC FROM:	Ply: 1 Qty: 2 Wgt: 133.0 lbs	**Job Number:** 24070306 7725 RES. **Truss Label:** 4MH5A	DRW: ... / ... 07/24/2024

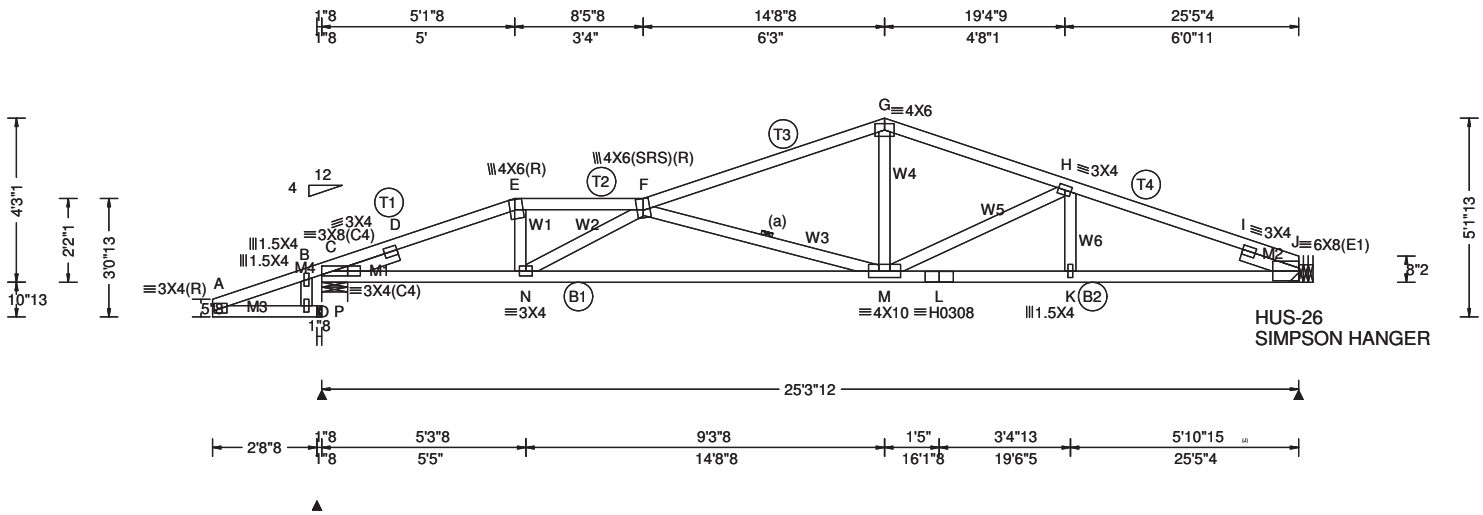

Loading Criteria (psf)

TCLL:	30.00
TCDL:	15.00
BCLL:	0.00
BCDL:	10.00
Des Ld:	55.00
NCBCLL:	10.00
Soffit:	2.00

Load Duration: 1.25
Spacing: 24.0 "

Wind Criteria
Wind Std: ASCE 7-22
Speed: 175 mph
Enclosure: Closed
Risk Category: II
EXP: C Kzt: NA
Mean Height: 15.00 ft
TCDL: 6.0 psf
BCDL: 6.0 psf
MWFRS Parallel Dist: > 2h
C&C Dist a: 3.00 ft
Loc. from endwall: not in 9.00 ft
GCpi: 0.18
Wind Duration: 1.60

Snow Criteria (Pg,Pf in PSF)
Pg: NA Ct: NA CAT: NA
Pf: NA Ce: NA
Lu: NA Cs: NA
Snow Duration: NA

Building Code:
FBC 8th Ed. 2023 Res. HVHZ
TPI Std: 2014
Rep Fac: Yes
FT/RT:20(0)/10(0)
Plate Type(s):
WAVE, HS

Defl/CSI Criteria

PP Deflection in	loc	L/defl	L/#
VERT(LL): 0.229	F	999	360
VERT(CL): 0.415	F	723	240
HORZ(LL): 0.058	J	-	-
HORZ(TL): 0.106	J	-	-

Creep Factor: 2.0
Max TC CSI: 0.862
Max BC CSI: 0.803
Max Web CSI: 0.401
Mfg Specified Camber:

VIEW Ver: 23.02.01A.1204.18

▲ Maximum Reactions (lbs)

Loc	Gravity R+	Gravity / R-	Gravity / Rh	Non-Gravity / Rw	Non-Gravity / U	Non-Gravity / RL
P	-	/-	/246	/-	/-	/245
C	1668	/-	/246	/914	/830	/172
J	1369	/-	/-	/780	/496	/-

Wind reactions based on C&C
P Brg Wid = 1.5 Min Req = -
C Brg Wid = 8.0 Min Req = 2.0 (Truss)
J Brg Wid = - Min Req = -
Bearing C is a rigid surface.

Maximum Top Chord Forces Per Ply (lbs)

Chords	Tens.	Comp.	Chords	Tens.	Comp.
A - B	285	- 193	F - G	1018	- 2407
B - C	288	- 177	G - H	1014	- 2386
C - D	1426	- 3169	H - I	1140	- 2923
D - E	1430	- 2978	I - J	1130	- 2972
E - F	1417	- 2878			

Maximum Bot Chord Forces Per Ply (lbs)

Chords	Tens.	Comp.	Chords	Tens.	Comp.
C - N	2764	- 1308	L - K	2702	- 1012
N - M	3967	- 1842	K - J	2705	- 1010
M - L	2702	- 1012			

Maximum Web Forces Per Ply (lbs)

Webs	Tens.	Comp.	Webs	Tens.	Comp.
A - O	218	- 245	F - M	1156	- 1842
B - O	53	- 5	G - M	953	- 346
O - P	222	- 246	M - H	249	- 559
E - N	753	- 213	H - K	134	0
N - F	691	- 1294			

Lumber
Top chord: 2x4 SP #2;
Bot chord: 2x4 SP #1; B2 2x4 SP #2;
Webs: 2x4 SP #2;
Lt Slider: 2x4 SP #2; block length = 1.750'
Rt Slider: 2x4 SP #2; block length = 1.544'
Lt Level Return: 2x4 SP #2;

Bracing
(a) Continuous lateral restraint equally spaced on member.

Wind
Member design based on both MWFRS and C&C.
Wind loading based on both gable and hip roof types.

Additional Notes
The maximum horizontal reaction is 246#
***** BEARING ANALOG MODIFIED! *****

****WARNING**** READ AND FOLLOW ALL NOTES ON THIS DRAWING!
****IMPORTANT**** FURNISH THIS DRAWING TO ALL CONTRACTORS INCLUDING THE INSTALLERS

Trusses require extreme care in fabricating, handling, shipping, installing and bracing. Refer to and follow the latest edition of BCSI (Building Component Safety Information, by TPI and SBCA) for safety practices prior to performing these functions. Installers shall provide temporary bracing per BCSI. Unless noted otherwise, top chord shall have properly attached structural sheathing and bottom chord shall have a properly attached rigid ceiling. Locations shown for permanent lateral restraint of webs shall have continuous lateral restraint (CLR), installed with diagonal bracing installed on the CLR per BCSI sections B3, B7, or B10, as applicable. Apply plates to each face of truss and position as shown above and on the Joint Details, unless noted otherwise. Refer to drawings 160A-Z for standard plate positions. Refer to job's General Notes page for additional information.

Alpine, a division of ITW Building Components Group Inc. shall not be responsible for any deviation from this drawing, any failure to build the truss in conformance with ANSI/TPI 1, or for handling, shipping, installation and bracing of trusses. A seal on this drawing or cover page listing this drawing, indicates acceptance of professional engineering responsibility solely for the design shown. The suitability and use of this drawing for any structure is the responsibility of the Building Designer per ANSI/TPI 1 Sec.2.

For more information see these web sites: Alpine: alpineitw.com; TPI: tpinst.org; SBCA: sbcacomponents.com; ICC: iccsafe.org; AWC: awc.org

SEQN: 139612 / T67 / SPEC FROM:	Ply: 1 Qty: 2 Wgt: 147.0 lbs	**Job Number:** 24070306 7725 RES. **Truss Label:** 4MH3AG	DRW: ... / ... 07/24/2024

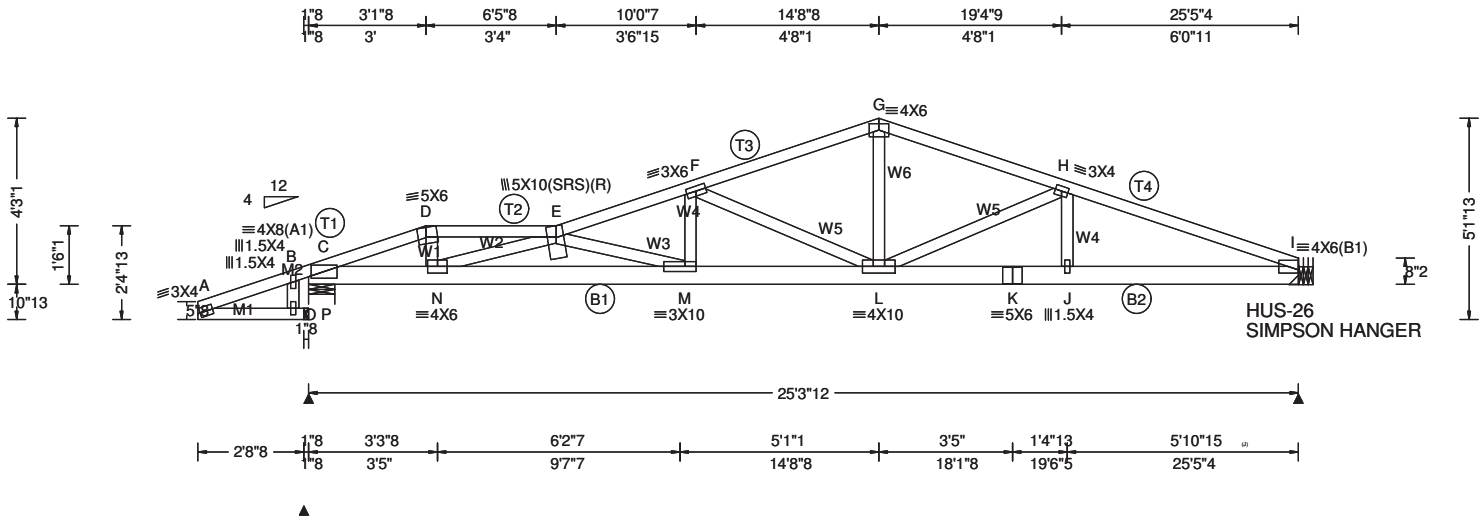

Loading Criteria (psf)

TCLL: 30.00
TCDL: 15.00
BCLL: 0.00
BCDL: 10.00
Des Ld: 55.00
NCBCLL: 10.00
Soffit: 2.00
Load Duration: 1.25
Spacing: 24.0 "

Wind Criteria

Wind Std: ASCE 7-22
Speed: 175 mph
Enclosure: Closed
Risk Category: II
EXP: C Kzt: NA
Mean Height: 15.00 ft
TCDL: 6.0 psf
BCDL: 6.0 psf
MWFRS Parallel Dist: 0 to h/2
C&C Dist a: 3.00 ft
Loc. from endwall: not in 9.00 ft
GCpi: 0.18
Wind Duration: 1.60

Snow Criteria (Pg,Pf in PSF)

Pg: NA Ct: NA CAT: NA
Pf: NA Ce: NA
Lu: NA Cs: NA
Snow Duration: NA

Building Code:
FBC 8th Ed. 2023 Res. HVHZ
TPI Std: 2014
Rep Fac: Varies by Ld Case
FT/RT:20(0)/10(0)
Plate Type(s):
WAVE

Defl/CSI Criteria

PP Deflection in	loc	L/defl	L/#
VERT(LL): 0.295	M	999	360
VERT(CL): 0.535	M	561	240
HORZ(LL): 0.047	I	-	-
HORZ(TL): 0.086	I	-	-

Creep Factor: 2.0
Max TC CSI: 0.915
Max BC CSI: 0.993
Max Web CSI: 0.908
Mfg Specified Camber:

VIEW Ver: 23.02.01A.1204.18

▲ Maximum Reactions (lbs)

Loc	Gravity R+	Gravity / R-	Gravity / Rh	Non-Gravity / Rw	Non-Gravity / U	Non-Gravity / RL
P	-	/-	/135	/-	/-	/62
B	2420	/-	/135	/-	/802	/62
I	1488	/-	/-	/-	/527	/-

Wind reactions based on MWFRS
P Brg Wid = 1.5 Min Req = -
B Brg Wid = 8.0 Min Req = 2.0 (Truss)
I Brg Wid = - Min Req = -
Bearing B is a rigid surface.

Maximum Top Chord Forces Per Ply (lbs)

Chords	Tens.	Comp.	Chords	Tens.	Comp.
A - B	192	- 100	E - F	1545	- 4599
B - C	207	- 100	F - G	951	- 2705
C - D	1405	- 4717	G - H	952	- 2706
D - E	1390	- 4744	H - I	1114	- 3124

Maximum Bot Chord Forces Per Ply (lbs)

Chords	Tens.	Comp.	Chords	Tens.	Comp.
C - N	4413	- 1308	L - K	2879	- 1017
N - M	6953	- 2307	K - J	2879	- 1017
M - L	4218	- 1421	J - I	2873	- 1011

Maximum Web Forces Per Ply (lbs)

Webs	Tens.	Comp.	Webs	Tens.	Comp.
A - O	112	- 140	M - F	1039	- 238
B - O	19	- 6	F - L	616	- 1906
O - P	126	- 135	G - L	1237	- 347
D - N	1318	- 329	L - H	167	- 418
N - E	978	- 2366	H - J	136	- 125
E - M	910	- 2775			

Lumber

Top chord: 2x4 SP #2; T1 2x4 SP #1;
Bot chord: 2x6 SP M-26; B2 2x6 SP #2;
Webs: 2x4 SP #2;
Lt Level Return: 2x4 SP #2;

Special Loads

------(Lumber Dur.Fac.=1.25 / Plate Dur.Fac.=1.25)

TC: From	90 plf at	-2.83 to	90 plf at	25.31
BC: From	20 plf at	0.00 to	20 plf at	2.96
BC: From	10 plf at	2.96 to	10 plf at	3.27
BC: From	20 plf at	3.27 to	20 plf at	25.31
PLB: From	4 plf at	-2.79 to	4 plf at	-0.17

TC: 53 lb Conc. Load at 2.96
BC: 62 lb Conc. Load at 2.96
BC: 760 lb Conc. Load at 3.27

Wind

Wind loads and reactions based on MWFRS.

Wind loading based on both gable and hip roof types.

Additional Notes

***** BEARING ANALOG MODIFIED! *****

****WARNING**** READ AND FOLLOW ALL NOTES ON THIS DRAWING!
****IMPORTANT**** FURNISH THIS DRAWING TO ALL CONTRACTORS INCLUDING THE INSTALLERS

Trusses require extreme care in fabricating, handling, shipping, installing and bracing. Refer to and follow the latest edition of BCSI (Building Component Safety Information, by TPI and SBCA) for safety practices prior to performing these functions. Installers shall provide temporary bracing per BCSI. Unless noted otherwise, top chord shall have properly attached structural sheathing and bottom chord shall have a properly attached rigid ceiling. Locations shown for permanent lateral restraint of webs shall have continuous lateral restraint (CLR), installed with diagonal bracing installed on the CLR per BCSI sections B3, B7, or B10, as applicable. Apply plates to each face of truss and position as shown above and on the Joint Details, unless noted otherwise. Refer to drawings 160A-Z for standard plate positions. Refer to job's General Notes page for additional information.

Alpine, a division of ITW Building Components Group Inc. shall not be responsible for any deviation from this drawing, any failure to build the truss in conformance with ANSI/TPI 1, or for handling, shipping, installation and bracing of trusses. A seal on this drawing or cover page listing this drawing, indicates acceptance of professional engineering responsibility solely for the design shown. The suitability and use of this drawing for any structure is the responsibility of the Building Designer per ANSI/TPI 1 Sec.2.

For more information see these web sites: Alpine: alpineitw.com; TPI: tpinst.org; SBCA: sbcacomponents.com; ICC: iccsafe.org; AWC: awc.org

SEQN: 206585 / T92 / COMN FROM:	Ply: 1 Qty: 3 Wgt: 126.0 lbs	**Job Number:** 24070306 7725 RES. **Truss Label:** 5T	DRW: ... / ... 07/24/2024

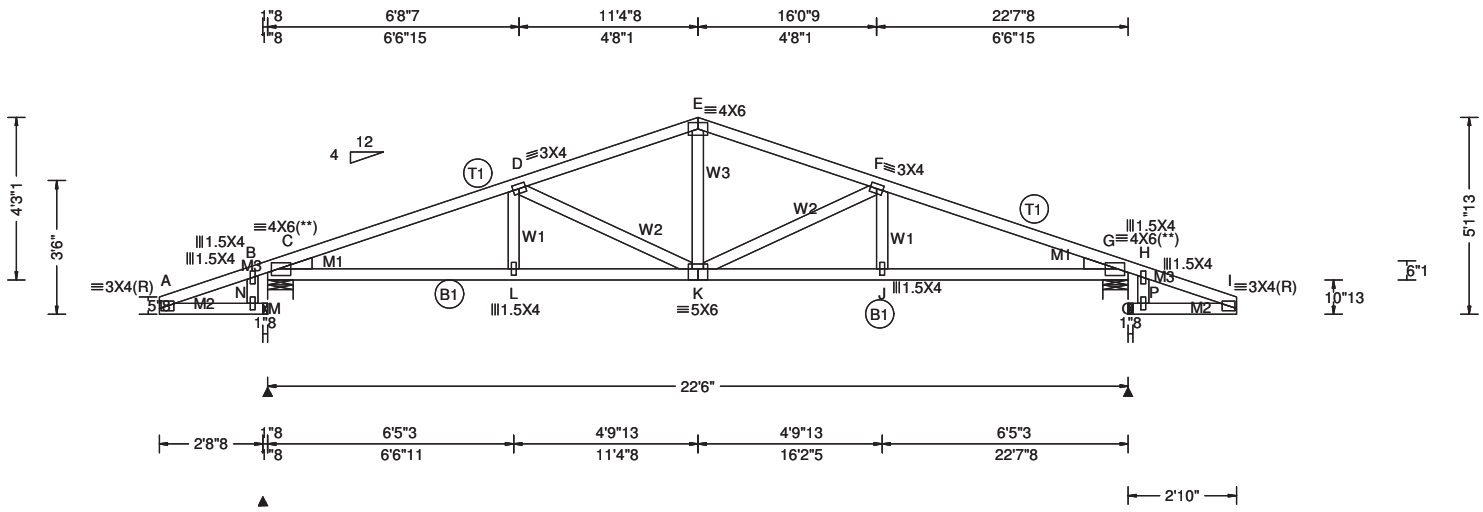

Loading Criteria (psf)

TCLL: 30.00
TCDL: 15.00
BCLL: 0.00
BCDL: 10.00
Des Ld: 55.00
NCBCLL: 10.00
Soffit: 2.00
Load Duration: 1.25
Spacing: 24.0 "

Wind Criteria

Wind Std: ASCE 7-22
Speed: 175 mph
Enclosure: Closed
Risk Category: II
EXP: C Kzt: NA
Mean Height: 15.00 ft
TCDL: 6.0 psf
BCDL: 6.0 psf
MWFRS Parallel Dist: > 2h
C&C Dist a: 3.00 ft
Loc. from endwall: not in 9.00 ft
GCpi: 0.18
Wind Duration: 1.60

Snow Criteria (Pg,Pf in PSF)

Pg: NA Ct: NA CAT: NA
Pf: NA Ce: NA
Lu: NA Cs: NA
Snow Duration: NA

Building Code:
FBC 8th Ed. 2023 Res. HVHZ
TPI Std: 2014
Rep Fac: Yes
FT/RT:20(0)/10(0)
Plate Type(s):
WAVE

Defl/CSI Criteria

PP Deflection in	loc	L/defl	L/#
VERT(LL): 0.148	K	999	360
VERT(CL): 0.261	K	999	240
HORZ(LL): 0.051	G	-	-
HORZ(TL): 0.090	G	-	-

Creep Factor: 2.0
Max TC CSI: 0.681
Max BC CSI: 0.916
Max Web CSI: 0.332
Mfg Specified Camber:

VIEW Ver: 23.02.01A.1204.18

▲ Maximum Reactions (lbs)

Loc	Gravity R+	Gravity / R-	Gravity / Rh	Non-Gravity / Rw	Non-Gravity / U	Non-Gravity / RL
N	-	/-	/264	/-	/-	/281
B	1481	/-	/251	/993	/683	/305
H	1497	/-	/-	/970	/687	/-
O	-	/-	/85	/-	/-	/421

Wind reactions based on C&C
N Brg Wid = 1.5 Min Req = -
B Brg Wid = 8.0 Min Req = 1.7 (Truss)
H Brg Wid = 8.0 Min Req = 1.8 (Truss)
O Brg Wid = 1.5 Min Req = -
Bearings B & G are a rigid surface.

Maximum Top Chord Forces Per Ply (lbs)

Chords	Tens.	Comp.	Chords	Tens.	Comp.
A - B	300	- 227	E - F	815	- 1879
B - C	329	- 229	F - G	978	- 2479
C - D	978	- 2537	G - H	487	- 366
D - E	821	- 1881	H - I	430	- 335

Maximum Bot Chord Forces Per Ply (lbs)

Chords	Tens.	Comp.	Chords	Tens.	Comp.
C - L	2414	- 952	K - J	2353	- 892
L - K	2412	- 956	J - G	2354	- 888

Maximum Web Forces Per Ply (lbs)

Webs	Tens.	Comp.	Webs	Tens.	Comp.
A - M	255	- 278	K - F	314	- 613
B - M	56	- 9	F - J	171	0
M - N	261	- 281	O - P	356	- 421
L - D	183	0	P - H	153	- 101
D - K	321	- 679	P - I	354	- 426
E - K	720	- 228			

Lumber

Top chord: 2x4 SP #2;
Bot chord: 2x4 SP #2;
Webs: 2x4 SP #2;
Lt Wedge: 2x4 SP #2;Rt Wedge: 2x4 SP #2;
Lt Level Return: 2x4 SP #2;
Rt Level Return: 2x4 SP #2;

Plating Notes

(**) 2 plate(s) require special positioning. Refer to scaled plate plot details for special positioning requirements.

Wind

Member design based on both MWFRS and C&C.

Wind loading based on both gable and hip roof types.

Additional Notes

The maximum horizontal reaction is 264#

***** BEARING ANALOG MODIFIED! *****

****WARNING**** READ AND FOLLOW ALL NOTES ON THIS DRAWING!
****IMPORTANT**** FURNISH THIS DRAWING TO ALL CONTRACTORS INCLUDING THE INSTALLERS
Trusses require extreme care in fabricating, handling, shipping, installing and bracing. Refer to and follow the latest edition of BCSI (Building Component Safety Information, by TPI and SBCA) for safety practices prior to performing these functions. Installers shall provide temporary bracing per BCSI. Unless noted otherwise, top chord shall have properly attached structural sheathing and bottom chord shall have a properly attached rigid ceiling. Locations shown for permanent lateral restraint of webs shall have continuous lateral restraint (CLR), installed with diagonal bracing installed on the CLR per BCSI sections B3, B7, or B10, as applicable. Apply plates to each face of truss and position as shown above and on the Joint Details, unless noted otherwise. Refer to drawings 160A-Z for standard plate positions. Refer to job's General Notes page for additional information.
Alpine, a division of ITW Building Components Group Inc. shall not be responsible for any deviation from this drawing, any failure to build the truss in conformance with ANSI/TPI 1, or for handling, shipping, installation and bracing of trusses. A seal on this drawing or cover page listing this drawing, indicates acceptance of professional engineering responsibility solely for the design shown. The suitability and use of this drawing for any structure is the responsibility of the Building Designer per ANSI/TPI 1 Sec.2.
For more information see these web sites: Alpine: alpineitw.com; TPI: tpinst.org; SBCA: sbcacomponents.com; ICC: iccsafe.org; AWC: awc.org

SEQN: 204323 / T89 / COMN FROM:	Ply: 1 Qty: 5 Wgt: 113.4 lbs	**Job Number:** 24070306 7725 RES. **Truss Label:** 5TA	DRW: ... / ... 07/24/2024

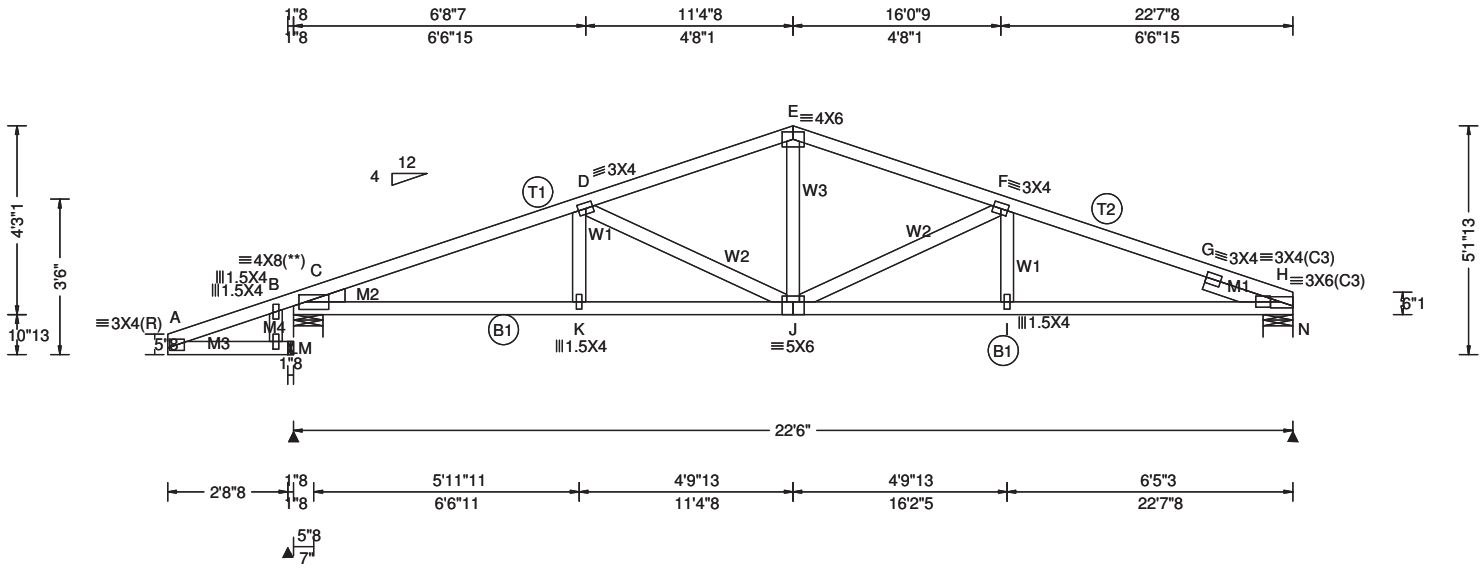

Loading Criteria (psf)

TCLL:	30.00
TCDL:	15.00
BCLL:	0.00
BCDL:	10.00
Des Ld:	55.00
NCBCLL:	10.00
Soffit:	2.00

Load Duration: 1.25
Spacing: 24.0 "

Wind Criteria
Wind Std: ASCE 7-22
Speed: 175 mph
Enclosure: Closed
Risk Category: II
EXP: C Kzt: NA
Mean Height: 15.00 ft
TCDL: 6.0 psf
BCDL: 6.0 psf
MWFRS Parallel Dist: > 2h
C&C Dist a: 3.00 ft
Loc. from endwall: not in 9.00 ft
GCpi: 0.18
Wind Duration: 1.60

Snow Criteria (Pg,Pf in PSF)
Pg: NA Ct: NA CAT: NA
Pf: NA Ce: NA
Lu: NA Cs: NA
Snow Duration: NA

Building Code:
FBC 8th Ed. 2023 Res. HVHZ
TPI Std: 2014
Rep Fac: Yes
FT/RT:20(0)/10(0)
Plate Type(s):
WAVE

Defl/CSI Criteria

PP Deflection in	loc	L/defl	L/#
VERT(LL): 0.128	J	999	360
VERT(CL): 0.230	J	999	240
HORZ(LL): 0.044	H	-	-
HORZ(TL): 0.079	H	-	-

Creep Factor: 2.0
Max TC CSI: 0.582
Max BC CSI: 0.750
Max Web CSI: 0.351
Mfg Specified Camber:

VIEW Ver: 23.02.01A.1204.18

▲ Maximum Reactions (lbs)

Loc	Gravity R+	/ R-	/ Rh	Non-Gravity / Rw	/ U	/ RL
M	-	/-	/266	/-	/-	/266
B	1485	/-	/266	/993	/689	/192
N	1242	/-	/-	/809	/469	/-

Wind reactions based on C&C
M Brg Wid = 1.5 Min Req = -
B Brg Wid = 8.0 Min Req = 1.8 (Truss)
N Brg Wid = 8.0 Min Req = 1.5 (Truss)
Bearings B & H are a rigid surface.

Maximum Top Chord Forces Per Ply (lbs)

Chords	Tens.	Comp.	Chords	Tens.	Comp.
A - B	302	- 229	E - F	835	- 1892
B - C	332	- 231	F - G	1016	- 2557
C - D	1005	- 2559	G - H	1021	- 2686
D - E	828	- 1889			

Maximum Bot Chord Forces Per Ply (lbs)

Chords	Tens.	Comp.	Chords	Tens.	Comp.
C - K	2351	- 887	J - I	2367	- 881
K - J	2348	- 890	I - H	2371	- 878

Maximum Web Forces Per Ply (lbs)

Webs	Tens.	Comp.	Webs	Tens.	Comp.
A - L	258	- 264	D - J	333	- 696
B - L	55	- 9	J - F	353	- 718
L - M	263	- 266	E - J	748	- 246
K - D	187	0	F - I	199	0

Lumber
Top chord: 2x4 SP #2;
Bot chord: 2x4 SP #2;
Webs: 2x4 SP #2;
Rt Slider: 2x4 SP #2; block length = 1.750'
Lt Wedge: 2x4 SP #2;Lt Level Return: 2x4 SP #2;

Plating Notes
(**) 1 plate(s) require special positioning. Refer to scaled plate plot details for special positioning requirements.

Wind
Member design based on both MWFRS and C&C.
Wind loading based on both gable and hip roof types.

Additional Notes
The maximum horizontal reaction is 266#
***** BEARING ANALOG MODIFIED! *****

****WARNING**** READ AND FOLLOW ALL NOTES ON THIS DRAWING!
****IMPORTANT**** FURNISH THIS DRAWING TO ALL CONTRACTORS INCLUDING THE INSTALLERS
Trusses require extreme care in fabricating, handling, shipping, installing and bracing. Refer to and follow the latest edition of BCSI (Building Component Safety Information, by TPI and SBCA) for safety practices prior to performing these functions. Installers shall provide temporary bracing per BCSI. Unless noted otherwise, top chord shall have properly attached structural sheathing and bottom chord shall have a properly attached rigid ceiling. Locations shown for permanent lateral restraint of webs shall have continuous lateral restraint (CLR), installed with diagonal bracing installed on the CLR per BCSI sections B3, B7, or B10, as applicable. Apply plates to each face of truss and position as shown above and on the Joint Details, unless noted otherwise. Refer to drawings 160A-Z for standard plate positions. Refer to job's General Notes page for additional information.
Alpine, a division of ITW Building Components Group Inc. shall not be responsible for any deviation from this drawing, any failure to build the truss in conformance with ANSI/TPI 1, or for handling, shipping, installation and bracing of trusses. A seal on this drawing or cover page listing this drawing, indicates acceptance of professional engineering responsibility solely for the design shown. The suitability and use of this drawing for any structure is the responsibility of the Building Designer per ANSI/TPI 1 Sec.2.
For more information see these web sites: Alpine: alpineitw.com; TPI: tpinst.org; SBCA: sbcacomponents.com; ICC: iccsafe.org; AWC: awc.org

SEQN: 204335 / T93 / COMN FROM:	Ply: 1 Qty: 2 Wgt: 110.6 lbs	**Job Number:** 24070306 7725 RES. **Truss Label:** 5TB	DRW: ... / ... 07/24/2024

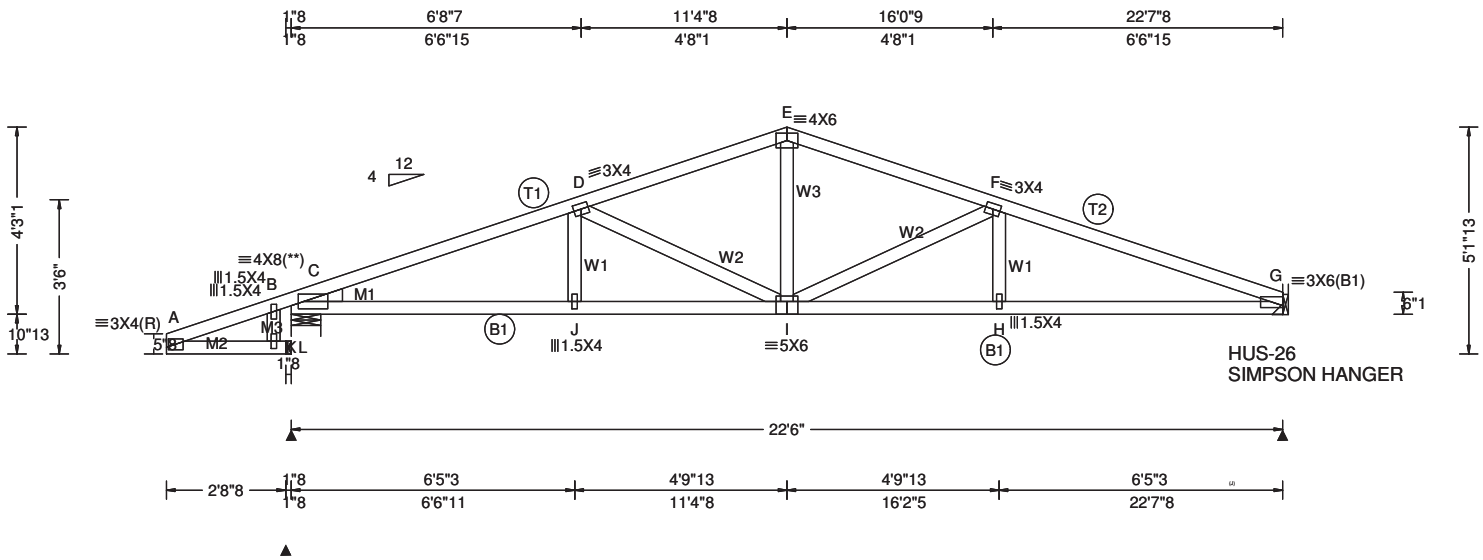

Loading Criteria (psf)

TCLL:	30.00
TCDL:	15.00
BCLL:	0.00
BCDL:	10.00
Des Ld:	55.00
NCBCLL:	10.00
Soffit:	2.00

Load Duration: 1.25
Spacing: 24.0 "

Wind Criteria
Wind Std: ASCE 7-22
Speed: 175 mph
Enclosure: Closed
Risk Category: II
EXP: C Kzt: NA
Mean Height: 15.00 ft
TCDL: 6.0 psf
BCDL: 6.0 psf
MWFRS Parallel Dist: > 2h
C&C Dist a: 3.00 ft
Loc. from endwall: not in 9.00 ft
GCpi: 0.18
Wind Duration: 1.60

Snow Criteria (Pg,Pf in PSF)
Pg: NA Ct: NA CAT: NA
Pf: NA Ce: NA
Lu: NA Cs: NA
Snow Duration: NA

Building Code:
FBC 8th Ed. 2023 Res. HVHZ
TPI Std: 2014
Rep Fac: Yes
FT/RT:20(0)/10(0)
Plate Type(s):
WAVE

Defl/CSI Criteria

PP Deflection in	loc	L/defl	L/#
VERT(LL): 0.149	I	999	360
VERT(CL): 0.268	I	996	240
HORZ(LL): 0.049	G	-	-
HORZ(TL): 0.088	G	-	-

Creep Factor: 2.0
Max TC CSI: 0.743
Max BC CSI: 0.963
Max Web CSI: 0.349
Mfg Specified Camber:

VIEW Ver: 23.02.01A.1204.18

▲ Maximum Reactions (lbs)

	Gravity			Non-Gravity		
Loc	R+	/ R-	/ Rh	/ Rw	/ U	/ RL
L	-	/-	/264	/-	/-	/264
B	1495	/-	/264	/999	/693	/190
G	1233	/-	/-	/803	/465	/-

Wind reactions based on C&C
L Brg Wid = 1.5 Min Req = -
B Brg Wid = 8.0 Min Req = 1.8 (Truss)
G Brg Wid = - Min Req = -
Bearing B is a rigid surface.

Maximum Top Chord Forces Per Ply (lbs)

Chords	Tens.	Comp.	Chords	Tens.	Comp.
A - B	300	- 228	D - E	840	- 1921
B - C	329	- 230	E - F	847	- 1922
C - D	1013	- 2581	F - G	1022	- 2624

Maximum Bot Chord Forces Per Ply (lbs)

Chords	Tens.	Comp.	Chords	Tens.	Comp.
C - J	2371	- 894	I - H	2394	- 890
J - I	2368	- 898	H - G	2396	- 886

Maximum Web Forces Per Ply (lbs)

Webs	Tens.	Comp.	Webs	Tens.	Comp.
A - K	257	- 262	D - I	329	- 685
B - K	55	- 9	I - F	350	- 714
K - L	262	- 264	E - I	762	- 252
J - D	184	0	F - H	195	0

Lumber
Top chord: 2x4 SP #2;
Bot chord: 2x4 SP #2;
Webs: 2x4 SP #2;
Lt Wedge: 2x4 SP #2;Lt Level Return: 2x4 SP #2;

Plating Notes
(**) 1 plate(s) require special positioning. Refer to scaled plate plot details for special positioning requirements.

Wind
Member design based on both MWFRS and C&C.
Wind loading based on both gable and hip roof types.

Additional Notes
The maximum horizontal reaction is 264#
***** BEARING ANALOG MODIFIED! *****

****WARNING**** READ AND FOLLOW ALL NOTES ON THIS DRAWING!
****IMPORTANT**** FURNISH THIS DRAWING TO ALL CONTRACTORS INCLUDING THE INSTALLERS
Trusses require extreme care in fabricating, handling, shipping, installing and bracing. Refer to and follow the latest edition of BCSI (Building Component Safety Information, by TPI and SBCA) for safety practices prior to performing these functions. Installers shall provide temporary bracing per BCSI. Unless noted otherwise, top chord shall have properly attached structural sheathing and bottom chord shall have a properly attached rigid ceiling. Locations shown for permanent lateral restraint of webs shall have continuous lateral restraint (CLR), installed with diagonal bracing installed on the CLR per BCSI sections B3, B7, or B10, as applicable. Apply plates to each face of truss and position as shown above and on the Joint Details, unless noted otherwise. Refer to drawings 160A-Z for standard plate positions. Refer to job's General Notes page for additional information.
Alpine, a division of ITW Building Components Group Inc. shall not be responsible for any deviation from this drawing, any failure to build the truss in conformance with ANSI/TPI 1, or for handling, shipping, installation and bracing of trusses. A seal on this drawing or cover page listing this drawing, indicates acceptance of professional engineering responsibility solely for the design shown. The suitability and use of this drawing for any structure is the responsibility of the Building Designer per ANSI/TPI 1 Sec.2.
For more information see these web sites: Alpine: alpineitw.com; TPI: tpinst.org; SBCA: sbcacomponents.com; ICC: iccsafe.org; AWC: awc.org

SEQN: 204360 / T13 / SPEC FROM:	Ply: 1 Qty: 2 Wgt: 98.0 lbs	**Job Number:** 24070306 7725 RES. **Truss Label:** 5TC	DRW: ... / ... 07/24/2024

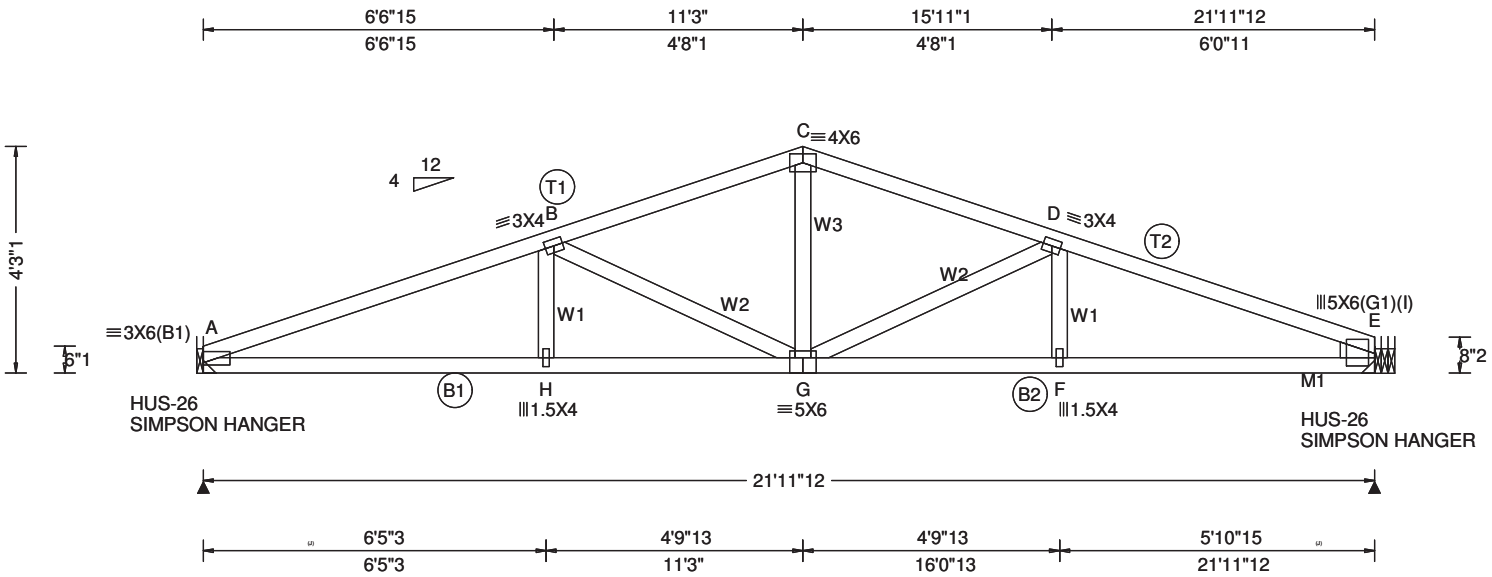

Loading Criteria (psf)

TCLL:	30.00
TCDL:	15.00
BCLL:	0.00
BCDL:	10.00
Des Ld:	55.00
NCBCLL:	10.00
Soffit:	2.00

Load Duration: 1.25
Spacing: 24.0 "

Wind Criteria
Wind Std: ASCE 7-22
Speed: 175 mph
Enclosure: Closed
Risk Category: II
EXP: C Kzt: NA
Mean Height: 15.00 ft
TCDL: 6.0 psf
BCDL: 6.0 psf
MWFRS Parallel Dist: > 2h
C&C Dist a: 3.00 ft
Loc. from endwall: not in 9.00 ft
GCpi: 0.18
Wind Duration: 1.60

Snow Criteria (Pg,Pf in PSF)
Pg: NA Ct: NA CAT: NA
Pf: NA Ce: NA
Lu: NA Cs: NA
Snow Duration: NA

Building Code:
FBC 8th Ed. 2023 Res. HVHZ
TPI Std: 2014
Rep Fac: Yes
FT/RT:20(0)/10(0)
Plate Type(s):
WAVE

Defl/CSI Criteria

PP Deflection in	loc	L/defl	L/#
VERT(LL): 0.138	G	999	360
VERT(CL): 0.253	G	999	240
HORZ(LL): 0.045	E	-	-
HORZ(TL): 0.082	E	-	-

Creep Factor: 2.0
Max TC CSI: 0.736
Max BC CSI: 0.941
Max Web CSI: 0.351
Mfg Specified Camber:

VIEW Ver: 23.02.01A.1204.18

▲ Maximum Reactions (lbs)

	Gravity			Non-Gravity		
Loc	R+	/ R-	/ Rh	/ Rw	/ U	/ RL
A	1216	/-	/-	/791	/478	/113
E	1202	/-	/-	/782	/474	/-

Wind reactions based on C&C
A Brg Wid = - Min Req = -
E Brg Wid = - Min Req = -

Maximum Top Chord Forces Per Ply (lbs)

Chords	Tens.	Comp.	Chords	Tens.	Comp.
A - B	1045	- 2578	C - D	857	- 1871
B - C	858	- 1872	D - E	1012	- 2488

Maximum Bot Chord Forces Per Ply (lbs)

Chords	Tens.	Comp.	Chords	Tens.	Comp.
A - H	2353	- 941	G - F	2258	- 885
H - G	2351	- 945	F - E	2261	- 882

Maximum Web Forces Per Ply (lbs)

Webs	Tens.	Comp.	Webs	Tens.	Comp.
H - B	197	0	G - D	322	- 615
B - G	363	- 719	D - F	171	0
C - G	735	- 257			

Lumber
Top chord: 2x4 SP #2;
Bot chord: 2x4 SP #2;
Webs: 2x4 SP #2;
Rt Stub Wedge: 2x4 SP #2;

Plating Notes
(I) - plates so marked were sized using 0% Fabrication Tolerance, 0 degrees Rotational Tolerance, and/or zero Positioning Tolerance.

Wind
Member design based on both MWFRS and C&C.
Wind loading based on both gable and hip roof types.

****WARNING**** READ AND FOLLOW ALL NOTES ON THIS DRAWING!
****IMPORTANT**** FURNISH THIS DRAWING TO ALL CONTRACTORS INCLUDING THE INSTALLERS
Trusses require extreme care in fabricating, handling, shipping, installing and bracing. Refer to and follow the latest edition of BCSI (Building Component Safety Information, by TPI and SBCA) for safety practices prior to performing these functions. Installers shall provide temporary bracing per BCSI. Unless noted otherwise, top chord shall have properly attached structural sheathing and bottom chord shall have a properly attached rigid ceiling. Locations shown for permanent lateral restraint of webs shall have continuous lateral restraint (CLR), installed with diagonal bracing installed on the CLR per BCSI sections B3, B7, or B10, as applicable. Apply plates to each face of truss and position as shown above and on the Joint Details, unless noted otherwise. Refer to drawings 160A-Z for standard plate positions. Refer to job's General Notes page for additional information.
Alpine, a division of ITW Building Components Group Inc. shall not be responsible for any deviation from this drawing, any failure to build the truss in conformance with ANSI/TPI 1, or for handling, shipping, installation and bracing of trusses. A seal on this drawing or cover page listing this drawing, indicates acceptance of professional engineering responsibility solely for the design shown. The suitability and use of this drawing for any structure is the responsibility of the Building Designer per ANSI/TPI 1 Sec.2.
For more information see these web sites: Alpine: alpineitw.com; TPI: tpinst.org; SBCA: sbcacomponents.com; ICC: iccsafe.org; AWC: awc.org

SEQN: 203649 / T20 / COMN FROM:	Ply: 1 Qty: 11 Wgt: 98.0 lbs	**Job Number:** 24070306 7725 RES. **Truss Label:** 6T	DRW: ... / ... 07/24/2024

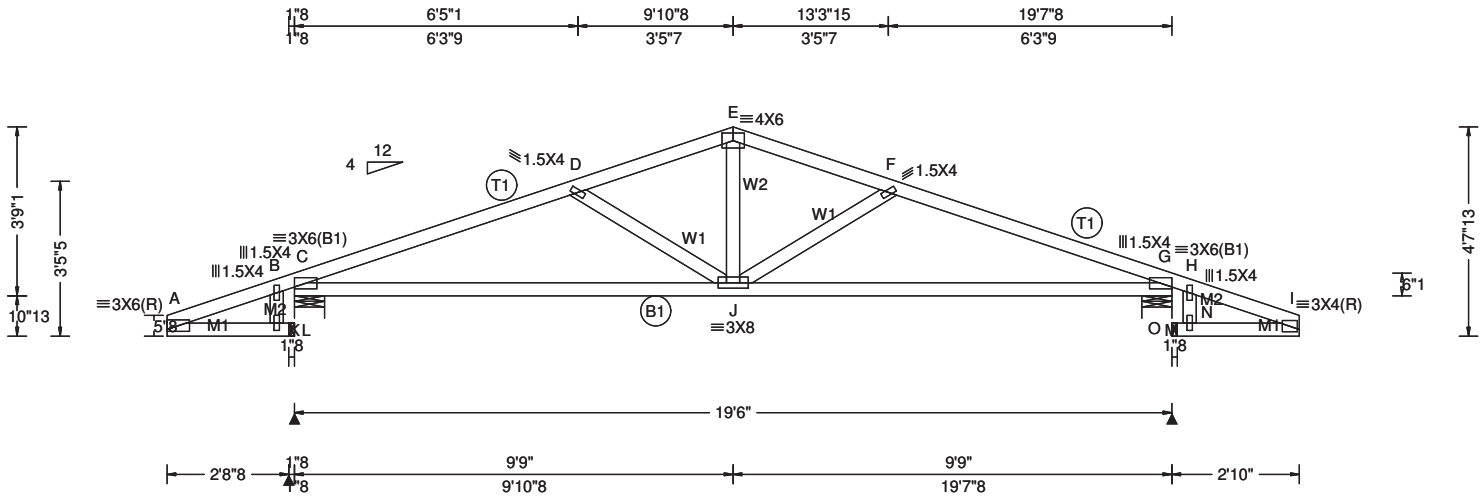

Loading Criteria (psf)

TCLL: 30.00
TCDL: 15.00
BCLL: 0.00
BCDL: 10.00
Des Ld: 55.00
NCBCLL: 10.00
Soffit: 2.00
Load Duration: 1.25
Spacing: 24.0 "

Wind Criteria

Wind Std: ASCE 7-22
Speed: 175 mph
Enclosure: Closed
Risk Category: II
EXP: C Kzt: NA
Mean Height: 15.00 ft
TCDL: 6.0 psf
BCDL: 6.0 psf
MWFRS Parallel Dist: h to 2h
C&C Dist a: 3.00 ft
Loc. from endwall: not in 9.00 ft
GCpi: 0.18
Wind Duration: 1.60

Snow Criteria (Pg,Pf in PSF)

Pg: NA Ct: NA CAT: NA
Pf: NA Ce: NA
Lu: NA Cs: NA
Snow Duration: NA

Building Code:
FBC 8th Ed. 2023 Res. HVHZ
TPI Std: 2014
Rep Fac: Yes
FT/RT:20(0)/10(0)
Plate Type(s):
WAVE

Defl/CSI Criteria

PP Deflection in	loc	L/defl	L/#
VERT(LL): 0.123	J	999	360
VERT(CL): 0.216	J	999	240
HORZ(LL): 0.044	G	-	-
HORZ(TL): 0.078	G	-	-

Creep Factor: 2.0
Max TC CSI: 0.903
Max BC CSI: 0.886
Max Web CSI: 0.157
Mfg Specified Camber:

VIEW Ver: 23.02.01A.1204.18

▲ Maximum Reactions (lbs)

Loc	Gravity R+	Gravity / R-	Gravity / Rh	Non-Gravity / Rw	Non-Gravity / U	Non-Gravity / RL
L	-	/-	/256	/-	/-	/299
C	1317	/-	/232	/887	/737	/303
O	1331	/-	/-	/862	/743	/-
M	-	/-	/114	/-	/-	/432

Wind reactions based on C&C
L Brg Wid = 1.5 Min Req = -
C Brg Wid = 8.0 Min Req = 1.6 (Truss)
O Brg Wid = 8.0 Min Req = 1.6 (Truss)
M Brg Wid = 1.5 Min Req = -
Bearings C & G are a rigid surface.

Maximum Top Chord Forces Per Ply (lbs)

Chords	Tens.	Comp.	Chords	Tens.	Comp.
A - B	294	- 260	E - F	790	- 1589
B - C	322	- 265	F - G	1028	- 2049
C - D	1026	- 2077	G - H	498	- 371
D - E	800	- 1593	H - I	439	- 339

Maximum Bot Chord Forces Per Ply (lbs)

Chords	Tens.	Comp.	Chords	Tens.	Comp.
C - J	1995	- 1013	J - G	1959	- 948

Maximum Web Forces Per Ply (lbs)

Webs	Tens.	Comp.	Webs	Tens.	Comp.
A - K	292	- 269	J - F	412	- 466
B - K	55	- 13	M - N	361	- 432
K - L	299	- 272	N - H	154	- 102
D - J	422	- 508	N - I	359	- 436
E - J	695	- 274			

Lumber

Top chord: 2x4 SP #2;
Bot chord: 2x4 SP #2;
Webs: 2x4 SP #2;
Lt Level Return: 2x4 SP #2;
Rt Level Return: 2x4 SP #2;

Wind

Member design based on both MWFRS and C&C.

Wind loading based on both gable and hip roof types.

Additional Notes

The maximum horizontal reaction is 256#

***** BEARING ANALOG MODIFIED! *****

****WARNING**** READ AND FOLLOW ALL NOTES ON THIS DRAWING!
****IMPORTANT**** FURNISH THIS DRAWING TO ALL CONTRACTORS INCLUDING THE INSTALLERS
Trusses require extreme care in fabricating, handling, shipping, installing and bracing. Refer to and follow the latest edition of BCSI (Building Component Safety Information, by TPI and SBCA) for safety practices prior to performing these functions. Installers shall provide temporary bracing per BCSI. Unless noted otherwise, top chord shall have properly attached structural sheathing and bottom chord shall have a properly attached rigid ceiling. Locations shown for permanent lateral restraint of webs shall have continuous lateral restraint (CLR), installed with diagonal bracing installed on the CLR per BCSI sections B3, B7, or B10, as applicable. Apply plates to each face of truss and position as shown above and on the Joint Details, unless noted otherwise. Refer to drawings 160A-Z for standard plate positions. Refer to job's General Notes page for additional information.
Alpine, a division of ITW Building Components Group Inc. shall not be responsible for any deviation from this drawing, any failure to build the truss in conformance with ANSI/TPI 1, or for handling, shipping, installation and bracing of trusses. A seal on this drawing or cover page listing this drawing, indicates acceptance of professional engineering responsibility solely for the design shown. The suitability and use of this drawing for any structure is the responsibility of the Building Designer per ANSI/TPI 1 Sec.2.
For more information see these web sites: Alpine: alpineitw.com; TPI: tpinst.org; SBCA: sbcacomponents.com; ICC: iccsafe.org; AWC: awc.org

SEQN: 203654 / T36 / SPEC FROM:	Ply: 1 Qty: 16 Wgt: 88.2 lbs	**Job Number:** 24070306 7725 RES. **Truss Label:** 6TA	DRW: ... / ... 07/24/2024

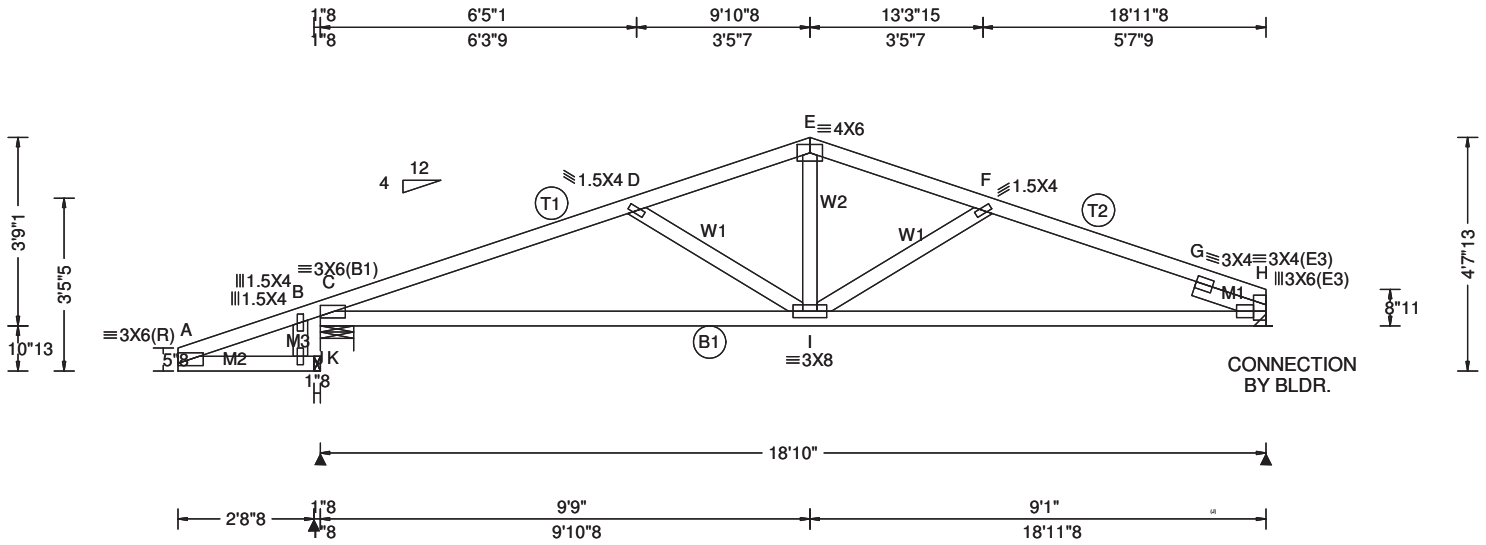

Loading Criteria (psf)

TCLL:	30.00
TCDL:	15.00
BCLL:	0.00
BCDL:	10.00
Des Ld:	55.00
NCBCLL:	10.00
Soffit:	2.00

Load Duration: 1.25
Spacing: 24.0 "

Wind Criteria
Wind Std: ASCE 7-22
Speed: 175 mph
Enclosure: Closed
Risk Category: II
EXP: C Kzt: NA
Mean Height: 15.00 ft
TCDL: 6.0 psf
BCDL: 6.0 psf
MWFRS Parallel Dist: h to 2h
C&C Dist a: 3.00 ft
Loc. from endwall: not in 9.00 ft
GCpi: 0.18
Wind Duration: 1.60

Snow Criteria (Pg,Pf in PSF)
Pg: NA Ct: NA CAT: NA
Pf: NA Ce: NA
Lu: NA Cs: NA
Snow Duration: NA

Building Code:
FBC 8th Ed. 2023 Res. HVHZ
TPI Std: 2014
Rep Fac: Yes
FT/RT:20(0)/10(0)
Plate Type(s):
WAVE

Defl/CSI Criteria

PP Deflection in	loc	L/defl	L/#
VERT(LL): 0.096	D	999	360
VERT(CL): 0.169	D	999	240
HORZ(LL): 0.031	H	-	-
HORZ(TL): 0.056	H	-	-

Creep Factor: 2.0
Max TC CSI: 0.745
Max BC CSI: 0.898
Max Web CSI: 0.320
Mfg Specified Camber:

VIEW Ver: 23.02.01A.1204.18

▲ Maximum Reactions (lbs)

	Gravity			Non-Gravity		
Loc	R+	/ R-	/ Rh	/ Rw	/ U	/ RL
K	-	/-	/260	/-	/-	/313
C	1301	/-	/260	/874	/762	/222
H	1023	/-	/-	/666	/497	/-

Wind reactions based on C&C
K Brg Wid = 1.5 Min Req = -
C Brg Wid = 8.0 Min Req = 1.5 (Truss)
H Brg Wid = - Min Req = -
Bearing C is a rigid surface.

Maximum Top Chord Forces Per Ply (lbs)

Chords	Tens.	Comp.	Chords	Tens.	Comp.
A - B	296	- 273	E - F	835	- 1568
B - C	325	- 279	F - G	1057	- 1982
C - D	1080	- 2056	G - H	1070	- 2167
D - E	827	- 1566			

Maximum Bot Chord Forces Per Ply (lbs)

Chords	Tens.	Comp.	Chords	Tens.	Comp.
C - I	1861	- 969	I - H	1824	- 919

Maximum Web Forces Per Ply (lbs)

Webs	Tens.	Comp.	Webs	Tens.	Comp.
A - J	306	- 255	D - I	443	- 516
B - J	54	- 14	E - I	702	- 298
J - K	313	- 260	I - F	419	- 469

Lumber
Top chord: 2x4 SP #2;
Bot chord: 2x4 SP #2;
Webs: 2x4 SP #2;
Rt Slider: 2x4 SP #2; block length = 1.500'
Lt Level Return: 2x4 SP #2;

Wind
Member design based on both MWFRS and C&C.
Wind loading based on both gable and hip roof types.

Additional Notes
The maximum horizontal reaction is 260#
***** BEARING ANALOG MODIFIED! *****

****WARNING**** READ AND FOLLOW ALL NOTES ON THIS DRAWING!
****IMPORTANT**** FURNISH THIS DRAWING TO ALL CONTRACTORS INCLUDING THE INSTALLERS
Trusses require extreme care in fabricating, handling, shipping, installing and bracing. Refer to and follow the latest edition of BCSI (Building Component Safety Information, by TPI and SBCA) for safety practices prior to performing these functions. Installers shall provide temporary bracing per BCSI. Unless noted otherwise, top chord shall have properly attached structural sheathing and bottom chord shall have a properly attached rigid ceiling. Locations shown for permanent lateral restraint of webs shall have continuous lateral restraint (CLR), installed with diagonal bracing installed on the CLR per BCSI sections B3, B7, or B10, as applicable. Apply plates to each face of truss and position as shown above and on the Joint Details, unless noted otherwise. Refer to drawings 160A-Z for standard plate positions. Refer to job's General Notes page for additional information.
Alpine, a division of ITW Building Components Group Inc. shall not be responsible for any deviation from this drawing, any failure to build the truss in conformance with ANSI/TPI 1, or for handling, shipping, installation and bracing of trusses. A seal on this drawing or cover page listing this drawing, indicates acceptance of professional engineering responsibility solely for the design shown. The suitability and use of this drawing for any structure is the responsibility of the Building Designer per ANSI/TPI 1 Sec.2.
For more information see these web sites: Alpine: alpineitw.com; TPI: tpinst.org; SBCA: sbcacomponents.com; ICC: iccsafe.org; AWC: awc.org

SEQN: 206588 / T131 / COMN FROM:	Ply: 1 Qty: 3 Wgt: 103.6 lbs	**Job Number:** 24070306 7725 RES. **Truss Label:** 6TP	DRW: ... / ... 07/24/2024

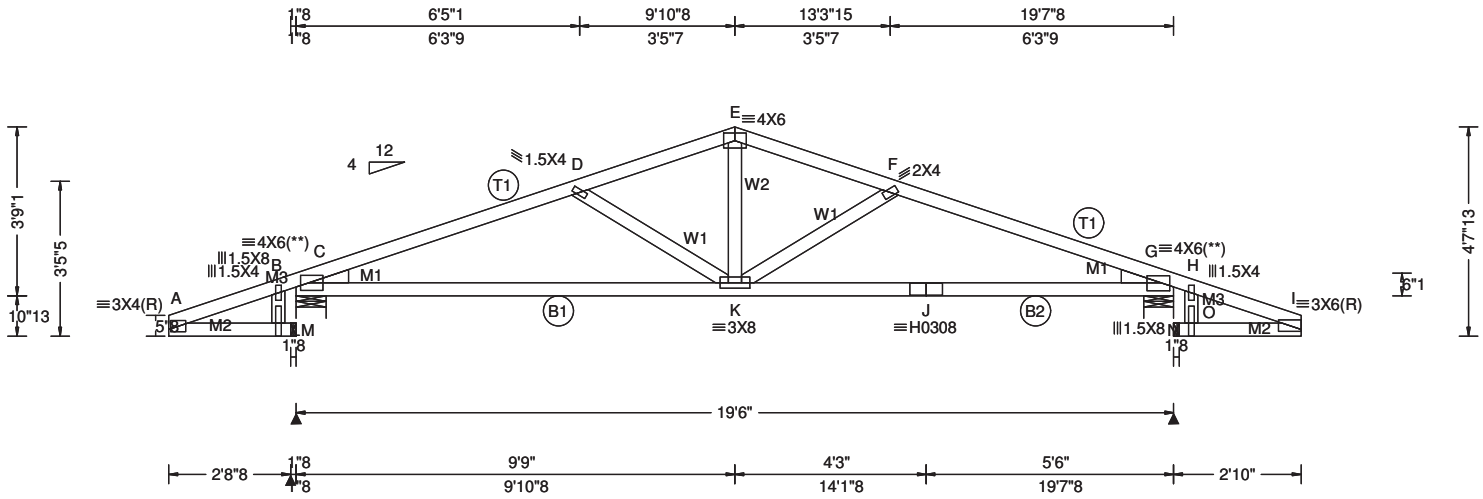

Loading Criteria (psf)

TCLL:	30.00
TCDL:	15.00
BCLL:	0.00
BCDL:	10.00
Des Ld:	55.00
NCBCLL:	10.00
Soffit:	2.00

Load Duration: 1.25
Spacing: 24.0 "

Wind Criteria
Wind Std: ASCE 7-22
Speed: 175 mph
Enclosure: Part. Enc.
Risk Category: II
EXP: C Kzt: NA
Mean Height: 15.00 ft
TCDL: 6.0 psf
BCDL: 6.0 psf
MWFRS Parallel Dist: h/2 to h
C&C Dist a: 3.00 ft
Loc. from endwall: not in 9.00 ft
GCpi: 0.55
Wind Duration: 1.60

Snow Criteria (Pg,Pf in PSF)
Pg: NA Ct: NA CAT: NA
Pf: NA Ce: NA
Lu: NA Cs: NA
Snow Duration: NA

Building Code:
FBC 8th Ed. 2023 Res. HVHZ
TPI Std: 2014
Rep Fac: Yes
FT/RT:20(0)/10(0)
Plate Type(s):
WAVE, HS

Defl/CSI Criteria

PP Deflection in	loc	L/defl	L/#
VERT(LL): 0.096	K	999	360
VERT(CL): 0.169	K	999	240
HORZ(LL): 0.030	G	-	-
HORZ(TL): 0.053	G	-	-

Creep Factor: 2.0
Max TC CSI: 0.671
Max BC CSI: 0.982
Max Web CSI: 0.185
Mfg Specified Camber:

VIEW Ver: 23.02.01A.1204.18

▲ Maximum Reactions (lbs)

	Gravity			Non-Gravity		
Loc	R+	/ R-	/ Rh	/ Rw	/ U	/ RL
M	96	/-84	/237	/107	/180	/447
B	1266	/-	/218	/1321	/1329	/470
H	1329	/-	/-	/811	/1027	/-
N	-	/-	/130	/-	/-	/444

Wind reactions based on C&C
M Brg Wid = 1.5 Min Req = -
B Brg Wid = 8.0 Min Req = 1.6 (Truss)
H Brg Wid = 8.0 Min Req = 1.6 (Truss)
N Brg Wid = 1.5 Min Req = -
Bearings B & G are a rigid surface.

Maximum Top Chord Forces Per Ply (lbs)

Chords	Tens.	Comp.	Chords	Tens.	Comp.
A - B	413	- 437	E - F	1507	- 1593
B - C	484	- 464	F - G	1841	- 2031
C - D	1829	- 2050	G - H	530	- 429
D - E	1522	- 1595	H - I	464	- 387

Maximum Bot Chord Forces Per Ply (lbs)

Chords	Tens.	Comp.	Chords	Tens.	Comp.
C - K	2003	- 1494	J - G	1981	- 1530
K - J	1981	- 1530			

Maximum Web Forces Per Ply (lbs)

Webs	Tens.	Comp.	Webs	Tens.	Comp.
A - L	454	- 402	K - F	561	- 468
B - L	263	- 154	N - O	401	- 444
L - M	447	- 383	O - H	191	- 141
D - K	532	- 495	O - I	405	- 456
E - K	831	- 886			

Lumber

Top chord: 2x4 SP #2;
Bot chord: 2x4 SP #1;
Webs: 2x4 SP #2;
Lt Wedge: 2x4 SP #2;Rt Wedge: 2x4 SP #2;
Lt Level Return: 2x4 SP #2;
Rt Level Return: 2x4 SP #2;

Plating Notes

(**) 2 plate(s) require special positioning. Refer to scaled plate plot details for special positioning requirements.

Wind

Member design based on both MWFRS and C&C.

Wind loading based on both gable and hip roof types.

Left bottom chord exposed to wind.

Additional Notes

The maximum horizontal reaction is 237#

***** BEARING ANALOG MODIFIED! *****

****WARNING**** READ AND FOLLOW ALL NOTES ON THIS DRAWING!
****IMPORTANT**** FURNISH THIS DRAWING TO ALL CONTRACTORS INCLUDING THE INSTALLERS

Trusses require extreme care in fabricating, handling, shipping, installing and bracing. Refer to and follow the latest edition of BCSI (Building Component Safety Information, by TPI and SBCA) for safety practices prior to performing these functions. Installers shall provide temporary bracing per BCSI. Unless noted otherwise, top chord shall have properly attached structural sheathing and bottom chord shall have a properly attached rigid ceiling. Locations shown for permanent lateral restraint of webs shall have continuous lateral restraint (CLR), installed with diagonal bracing installed on the CLR per BCSI sections B3, B7, or B10, as applicable. Apply plates to each face of truss and position as shown above and on the Joint Details, unless noted otherwise. Refer to drawings 160A-Z for standard plate positions. Refer to job's General Notes page for additional information.

Alpine, a division of ITW Building Components Group Inc. shall not be responsible for any deviation from this drawing, any failure to build the truss in conformance with ANSI/TPI 1, or for handling, shipping, installation and bracing of trusses. A seal on this drawing or cover page listing this drawing, indicates acceptance of professional engineering responsibility solely for the design shown. The suitability and use of this drawing for any structure is the responsibility of the Building Designer per ANSI/TPI 1 Sec.2.

For more information see these web sites: Alpine: alpineitw.com; TPI: tpinst.org; SBCA: sbcacomponents.com; ICC: iccsafe.org; AWC: awc.org

SEQN: 206591 / T82 / SPEC FROM:	Ply: 1 Qty: 3 Wgt: 124.6 lbs	**Job Number:** 24070306 7725 RES. **Truss Label:** 6TAP	DRW: ... / ... 07/24/2024

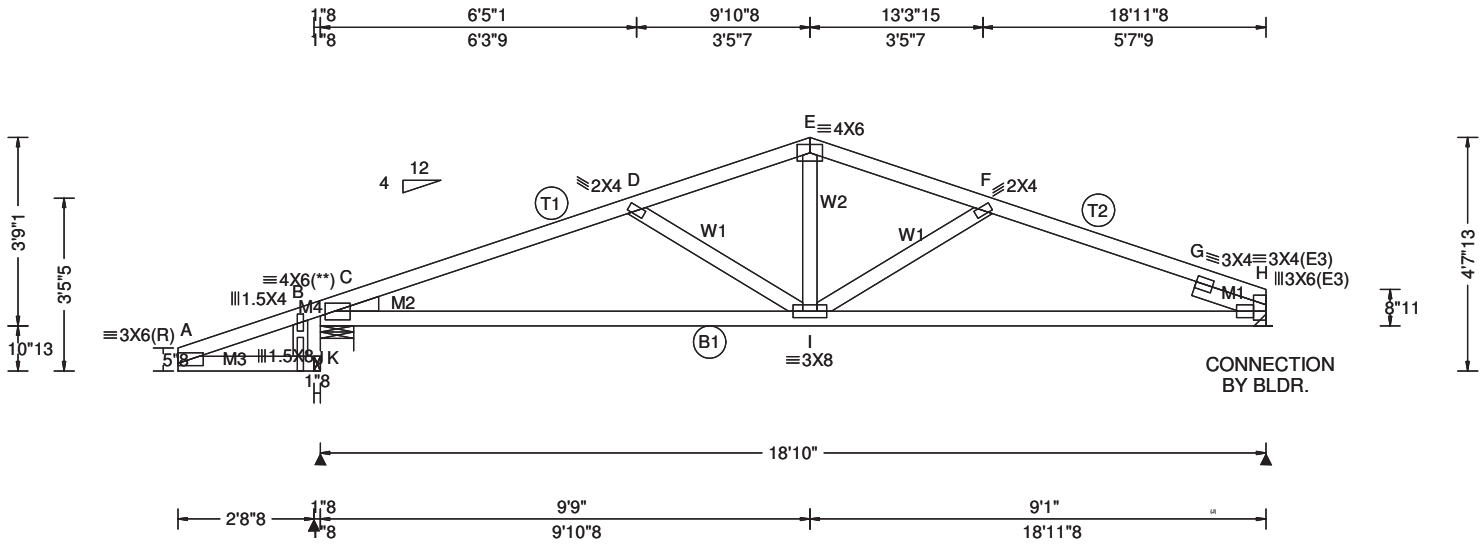

Loading Criteria (psf)

TCLL:	30.00
TCDL:	15.00
BCLL:	0.00
BCDL:	10.00
Des Ld:	55.00
NCBCLL:	10.00
Soffit:	2.00

Load Duration: 1.25
Spacing: 24.0 "

Wind Criteria
Wind Std: ASCE 7-22
Speed: 175 mph
Enclosure: Part. Enc.
Risk Category: II
EXP: C Kzt: NA
Mean Height: 15.00 ft
TCDL: 6.0 psf
BCDL: 6.0 psf
MWFRS Parallel Dist: h to 2h
C&C Dist a: 3.00 ft
Loc. from endwall: not in 9.00 ft
GCpi: 0.55
Wind Duration: 1.60

Snow Criteria (Pg,Pf in PSF)
Pg: NA Ct: NA CAT: NA
Pf: NA Ce: NA
Lu: NA Cs: NA
Snow Duration: NA

Building Code:
FBC 8th Ed. 2023 Res. HVHZ
TPI Std: 2014
Rep Fac: Yes
FT/RT:20(0)/10(0)
Plate Type(s):
WAVE

Defl/CSI Criteria

PP Deflection in	loc	L/defl	L/#
VERT(LL): 0.083	I	999	360
VERT(CL): 0.147	I	999	240
HORZ(LL): 0.028	H	-	-
HORZ(TL): 0.051	H	-	-

Creep Factor: 2.0
Max TC CSI: 0.620
Max BC CSI: 0.865
Max Web CSI: 0.447
Mfg Specified Camber:

VIEW Ver: 23.02.01A.1204.18

▲ Maximum Reactions (lbs)

	Gravity			Non-Gravity		
Loc	R+	/ R-	/ Rh	/ Rw	/ U	/ RL
K	-	/-	/243	/-	/-	/338
B	1302	/-	/243	/1088	/1000	/252
H	1022	/-	/-	/827	/731	/-

Wind reactions based on C&C
K Brg Wid = 1.5 Min Req = -
B Brg Wid = 8.0 Min Req = 1.5 (Truss)
H Brg Wid = - Min Req = -
Bearing B is a rigid surface.

Maximum Top Chord Forces Per Ply (lbs)

Chords	Tens.	Comp.	Chords	Tens.	Comp.
A - B	282	- 293	E - F	1211	- 1568
B - C	309	- 302	F - G	1526	- 1982
C - D	1533	- 2027	G - H	1527	- 2191
D - E	1205	- 1567			

Maximum Bot Chord Forces Per Ply (lbs)

Chords	Tens.	Comp.	Chords	Tens.	Comp.
C - I	1852	- 1368	I - H	1823	- 1337

Maximum Web Forces Per Ply (lbs)

Webs	Tens.	Comp.	Webs	Tens.	Comp.
A - J	328	- 239	D - I	570	- 503
B - J	51	- 17	E - I	700	- 457
J - K	338	- 243	I - F	565	- 468

Lumber
Top chord: 2x4 SP #2;
Bot chord: 2x4 SP #2;
Webs: 2x4 SP #2;
Rt Slider: 2x4 SP #2; block length = 1.500'
Lt Wedge: 2x4 SP #2;Lt Level Return: 2x4 SP #2;

Plating Notes
(**) 1 plate(s) require special positioning. Refer to scaled plate plot details for special positioning requirements.

Wind
Member design based on both MWFRS and C&C.
Wind loading based on both gable and hip roof types.

Additional Notes
The maximum horizontal reaction is 243#
***** BEARING ANALOG MODIFIED! *****

****WARNING**** READ AND FOLLOW ALL NOTES ON THIS DRAWING!
****IMPORTANT**** FURNISH THIS DRAWING TO ALL CONTRACTORS INCLUDING THE INSTALLERS
Trusses require extreme care in fabricating, handling, shipping, installing and bracing. Refer to and follow the latest edition of BCSI (Building Component Safety Information, by TPI and SBCA) for safety practices prior to performing these functions. Installers shall provide temporary bracing per BCSI. Unless noted otherwise, top chord shall have properly attached structural sheathing and bottom chord shall have a properly attached rigid ceiling. Locations shown for permanent lateral restraint of webs shall have continuous lateral restraint (CLR), installed with diagonal bracing installed on the CLR per BCSI sections B3, B7, or B10, as applicable. Apply plates to each face of truss and position as shown above and on the Joint Details, unless noted otherwise. Refer to drawings 160A-Z for standard plate positions. Refer to job's General Notes page for additional information.
Alpine, a division of ITW Building Components Group Inc. shall not be responsible for any deviation from this drawing, any failure to build the truss in conformance with ANSI/TPI 1, or for handling, shipping, installation and bracing of trusses. A seal on this drawing or cover page listing this drawing, indicates acceptance of professional engineering responsibility solely for the design shown. The suitability and use of this drawing for any structure is the responsibility of the Building Designer per ANSI/TPI 1 Sec.2.
For more information see these web sites: Alpine: alpineitw.com; TPI: tpinst.org; SBCA: sbcacomponents.com; ICC: iccsafe.org; AWC: awc.org

SEQN: 206594 / T132 / HIPS FROM:	Ply: 1 Qty: 2 Wgt: 114.8 lbs	**Job Number:** 24070306 7725 RES. **Truss Label:** 6H9P	DRW: ... / ... 07/24/2024

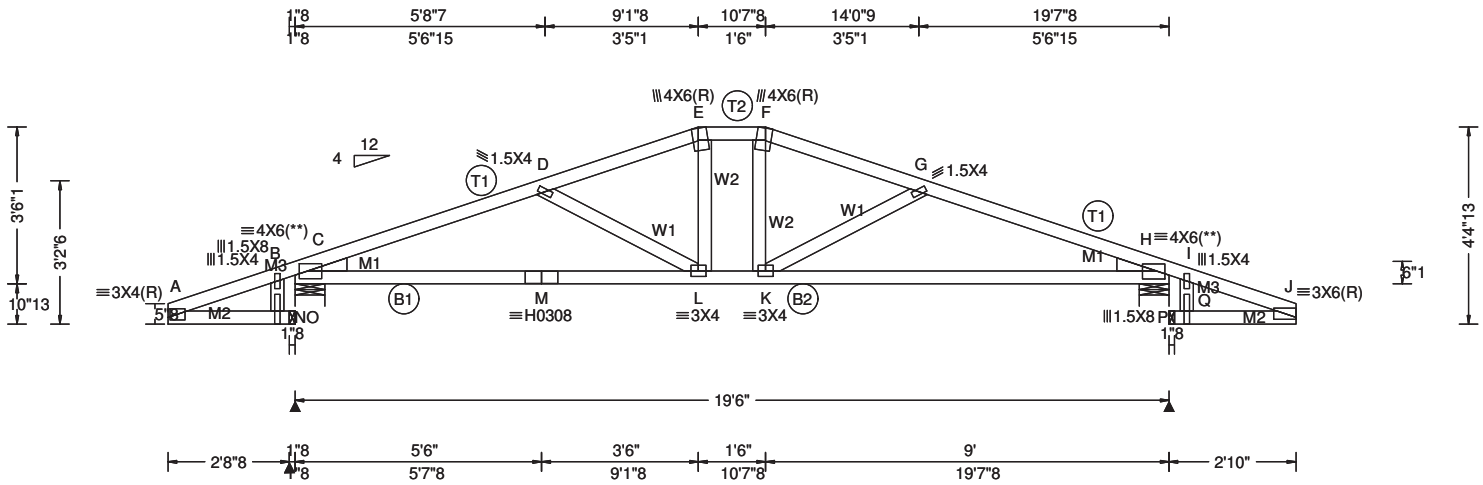

Loading Criteria (psf)

TCLL:	30.00
TCDL:	15.00
BCLL:	0.00
BCDL:	10.00
Des Ld:	55.00
NCBCLL:	10.00
Soffit:	2.00

Load Duration: 1.25
Spacing: 24.0 "

Wind Criteria
Wind Std: ASCE 7-22
Speed: 175 mph
Enclosure: Part. Enc.
Risk Category: II
EXP: C Kzt: NA
Mean Height: 15.00 ft
TCDL: 6.0 psf
BCDL: 6.0 psf
MWFRS Parallel Dist: h/2 to h
C&C Dist a: 3.00 ft
Loc. from endwall: not in 9.00 ft
GCpi: 0.55
Wind Duration: 1.60

Snow Criteria (Pg,Pf in PSF)
Pg: NA Ct: NA CAT: NA
Pf: NA Ce: NA
Lu: NA Cs: NA
Snow Duration: NA

Building Code:
FBC 8th Ed. 2023 Res. HVHZ
TPI Std: 2014
Rep Fac: Yes
FT/RT:20(0)/10(0)
Plate Type(s):
WAVE, HS

Defl/CSI Criteria

PP Deflection in	loc	L/defl	L/#
VERT(LL): -0.104	K	999	360
VERT(CL): 0.182	L	999	240
HORZ(LL): -0.036	H	-	-
HORZ(TL): 0.059	H	-	-

Creep Factor: 2.0
Max TC CSI: 0.672
Max BC CSI: 0.912
Max Web CSI: 0.152
Mfg Specified Camber:

VIEW Ver: 23.02.01A.1204.18

▲ Maximum Reactions (lbs)

	Gravity			Non-Gravity		
Loc	R+	/ R-	/ Rh	/ Rw	/ U	/ RL
O	156	/-61	/271	/114	/212	/470
B	1223	/-	/221	/1311	/1342	/485
I	1330	/-	/-	/818	/1092	/-
P	-	/-	/199	/-	/-	/442

Wind reactions based on C&C
O Brg Wid = 1.5 Min Req = -
B Brg Wid = 8.0 Min Req = 1.5 (Truss)
I Brg Wid = 8.0 Min Req = 1.6 (Truss)
P Brg Wid = 1.5 Min Req = -
Bearings B & H are a rigid surface.

Maximum Top Chord Forces Per Ply (lbs)

Chords	Tens.	Comp.	Chords	Tens.	Comp.
A - B	420	- 456	F - G	1743	- 1680
B - C	487	- 473	G - H	2058	- 2074
C - D	2044	- 2109	H - I	528	- 424
D - E	1758	- 1685	I - J	462	- 383
E - F	1714	- 1546			

Maximum Bot Chord Forces Per Ply (lbs)

Chords	Tens.	Comp.	Chords	Tens.	Comp.
C - M	2076	- 1715	L - K	1687	- 1435
M - L	2076	- 1715	K - H	2038	- 1752

Maximum Web Forces Per Ply (lbs)

Webs	Tens.	Comp.	Webs	Tens.	Comp.
A - N	473	- 409	F - K	413	- 422
B - N	290	- 143	K - G	501	- 473
N - O	470	- 391	P - Q	396	- 442
D - L	484	- 500	Q - I	191	- 141
E - L	463	- 447	Q - J	400	- 454

Lumber

Top chord: 2x4 SP #2;
Bot chord: 2x4 SP #2; B2 2x4 SP #1;
Webs: 2x4 SP #2;
Lt Wedge: 2x4 SP #2;Rt Wedge: 2x4 SP #2;
Lt Level Return: 2x4 SP #2;
Rt Level Return: 2x4 SP #2;

Plating Notes

(**) 2 plate(s) require special positioning. Refer to scaled plate plot details for special positioning requirements.

Wind

Member design based on both MWFRS and C&C.

Wind loading based on both gable and hip roof types.

Left bottom chord exposed to wind.

Additional Notes

The maximum horizontal reaction is 271#

***** BEARING ANALOG MODIFIED! *****

****WARNING**** READ AND FOLLOW ALL NOTES ON THIS DRAWING!
****IMPORTANT**** FURNISH THIS DRAWING TO ALL CONTRACTORS INCLUDING THE INSTALLERS

Trusses require extreme care in fabricating, handling, shipping, installing and bracing. Refer to and follow the latest edition of BCSI (Building Component Safety Information, by TPI and SBCA) for safety practices prior to performing these functions. Installers shall provide temporary bracing per BCSI. Unless noted otherwise, top chord shall have properly attached structural sheathing and bottom chord shall have a properly attached rigid ceiling. Locations shown for permanent lateral restraint of webs shall have continuous lateral restraint (CLR), installed with diagonal bracing installed on the CLR per BCSI sections B3, B7, or B10, as applicable. Apply plates to each face of truss and position as shown above and on the Joint Details, unless noted otherwise. Refer to drawings 160A-Z for standard plate positions. Refer to job's General Notes page for additional information.

Alpine, a division of ITW Building Components Group Inc. shall not be responsible for any deviation from this drawing, any failure to build the truss in conformance with ANSI/TPI 1, or for handling, shipping, installation and bracing of trusses. A seal on this drawing or cover page listing this drawing, indicates acceptance of professional engineering responsibility solely for the design shown. The suitability and use of this drawing for any structure is the responsibility of the Building Designer per ANSI/TPI 1 Sec.2.

For more information see these web sites: Alpine: alpineitw.com; TPI: tpinst.org; SBCA: sbcacomponents.com; ICC: iccsafe.org; AWC: awc.org

SEQN: 139592 / T26 / HIPS FROM:	Ply: 2 Qty: 1 Wgt: 114.8 lbs	**Job Number:** 24070306 7725 RES. **Truss Label:** 6H7GP	DRW: ... / ... 07/24/2024

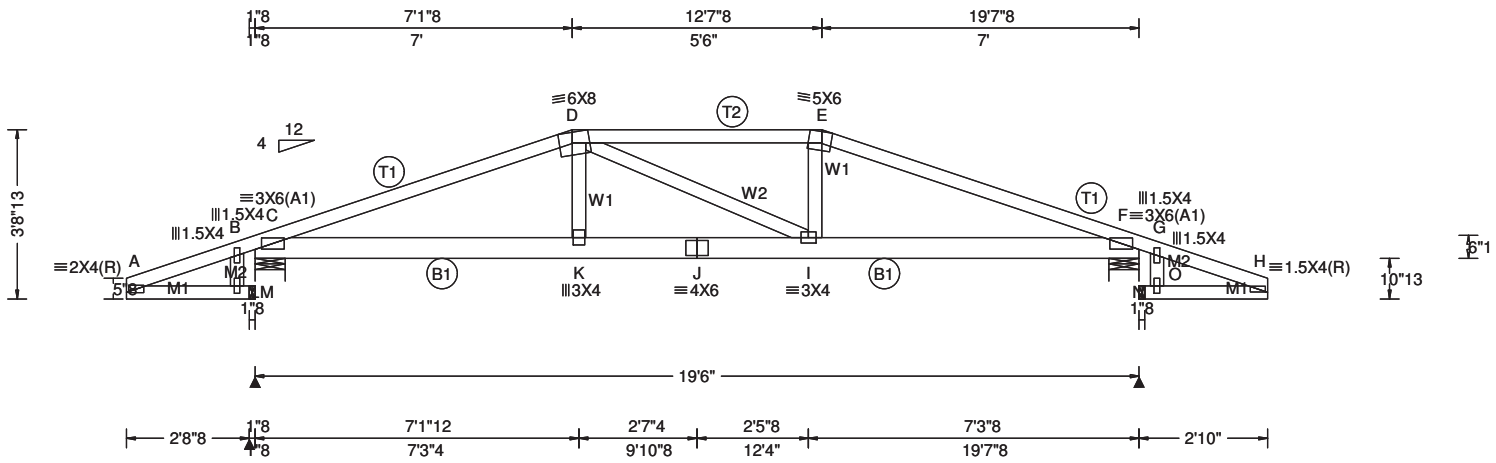

Loading Criteria (psf)

TCLL: 30.00
TCDL: 15.00
BCLL: 0.00
BCDL: 10.00
Des Ld: 55.00
NCBCLL: 0.00
Soffit: 2.00
Load Duration: 1.25
Spacing: 24.0 "

Wind Criteria

Wind Std: ASCE 7-22
Speed: 175 mph
Enclosure: Part. Enc.
Risk Category: II
EXP: C Kzt: NA
Mean Height: 15.00 ft
TCDL: 6.0 psf
BCDL: 6.0 psf
MWFRS Parallel Dist: 0 to h/2
C&C Dist a: 3.00 ft
Loc. from endwall: not in 9.00 ft
GCpi: 0.55
Wind Duration: 1.60

Snow Criteria (Pg,Pf in PSF)

Pg: NA Ct: NA CAT: NA
Pf: NA Ce: NA
Lu: NA Cs: NA
Snow Duration: NA

Building Code:
FBC 8th Ed. 2023 Res. HVHZ
TPI Std: 2014
Rep Fac: No
FT/RT:20(0)/10(0)
Plate Type(s):
WAVE

Defl/CSI Criteria

PP Deflection in	loc	L/defl	L/#
VERT(LL): -0.139	I	999	360
VERT(CL): 0.196	I	999	240
HORZ(LL): -0.035	F	-	-
HORZ(TL): 0.048	F	-	-

Creep Factor: 2.0
Max TC CSI: 0.640
Max BC CSI: 0.651
Max Web CSI: 0.102
Mfg Specified Camber:

VIEW Ver: 23.02.01A.1204.18

▲ Maximum Reactions (lbs)

Loc	Gravity R+	/ R-	/ Rh	Non-Gravity / Rw	/ U	/ RL
M	-	/-	/267	/-	/-	/171
B	2361	/-	/267	/-	/1792	/171
G	2355	/-	/-	/-	/1758	/-
N	43	/-	/0	/-	/51	/0

Wind reactions based on MWFRS
M Brg Wid = 1.5 Min Req = -
B Brg Wid = 8.0 Min Req = 1.5 (Truss)
G Brg Wid = 8.0 Min Req = 1.5 (Truss)
N Brg Wid = 1.5 Min Req = -
Bearings B & F are a rigid surface.

Maximum Top Chord Forces Per Ply (lbs)

Chords	Tens.	Comp.	Chords	Tens.	Comp.
A - B	151	- 103	E - F	1986	- 2524
B - C	166	- 112	F - G	35	- 23
C - D	2012	- 2563	G - H	40	- 32
D - E	1884	- 2400			

Maximum Bot Chord Forces Per Ply (lbs)

Chords	Tens.	Comp.	Chords	Tens.	Comp.
C - K	2386	- 1871	J - I	2413	- 1890
K - J	2413	- 1890	I - F	2348	- 1845

Maximum Web Forces Per Ply (lbs)

Webs	Tens.	Comp.	Webs	Tens.	Comp.
A - L	85	- 131	I - E	446	- 330
B - L	16	- 7	N - O	0	0
L - M	86	- 133	O - G	29	- 21
D - K	452	- 333	O - H	5	- 7
D - I	16	- 14			

Lumber

Top chord: 2x4 SP #2; T2 2x4 SP #1;
Bot chord: 2x6 SP #2;
Webs: 2x4 SP #2;
Lt Level Return: 2x4 SP #2;
Rt Level Return: 2x4 SP #2;

Nailnote

Nail Schedule:0.128"x3", min. nails
Top Chord: 1 Row @12.00" o.c.
Bot Chord: 1 Row @12.00" o.c.
Webs : 1 Row @ 4" o.c.
Use equal spacing between rows and stagger nails in each row to avoid splitting.

Special Loads

------(Lumber Dur.Fac.=1.25 / Plate Dur.Fac.=1.25)

TC: From	90 plf at	-2.83 to	90 plf at	7.00
TC: From	45 plf at	7.00 to	45 plf at	12.50
TC: From	90 plf at	12.50 to	90 plf at	22.33
BC: From	20 plf at	0.00 to	20 plf at	7.01
BC: From	10 plf at	7.01 to	10 plf at	12.49
BC: From	20 plf at	12.49 to	20 plf at	19.50
PLB: From	4 plf at	-2.79 to	4 plf at	-0.17
PLB: From	4 plf at	19.66 to	4 plf at	22.29

TC: 155 lb Conc. Load at 7.01, 9.06,10.44,12.49
BC: 697 lb Conc. Load at 7.01,12.49
BC: 192 lb Conc. Load at 9.06,10.44

Wind

Wind loads and reactions based on MWFRS.

Wind loading based on both gable and hip roof types.

Additional Notes

The maximum horizontal reaction is 267#

***** BEARING ANALOG MODIFIED! *****

****WARNING**** READ AND FOLLOW ALL NOTES ON THIS DRAWING!
****IMPORTANT**** FURNISH THIS DRAWING TO ALL CONTRACTORS INCLUDING THE INSTALLERS
Trusses require extreme care in fabricating, handling, shipping, installing and bracing. Refer to and follow the latest edition of BCSI (Building Component Safety Information, by TPI and SBCA) for safety practices prior to performing these functions. Installers shall provide temporary bracing per BCSI. Unless noted otherwise, top chord shall have properly attached structural sheathing and bottom chord shall have a properly attached rigid ceiling. Locations shown for permanent lateral restraint of webs shall have continuous lateral restraint (CLR), installed with diagonal bracing installed on the CLR per BCSI sections B3, B7, or B10, as applicable. Apply plates to each face of truss and position as shown above and on the Joint Details, unless noted otherwise. Refer to drawings 160A-Z for standard plate positions. Refer to job's General Notes page for additional information.
Alpine, a division of ITW Building Components Group Inc. shall not be responsible for any deviation from this drawing, any failure to build the truss in conformance with ANSI/TPI 1, or for handling, shipping, installation and bracing of trusses. A seal on this drawing or cover page listing this drawing, indicates acceptance of professional engineering responsibility solely for the design shown. The suitability and use of this drawing for any structure is the responsibility of the Building Designer per ANSI/TPI 1 Sec.2.
For more information see these web sites: Alpine: alpineitw.com; TPI: tpinst.org; SBCA: sbcacomponents.com; ICC: iccsafe.org; AWC: awc.org

SEQN: 139598 / T1 / HIPS FROM:	Ply: 2 Qty: 1 Wgt: 114.8 lbs	**Job Number:** 24070306 7725 RES. **Truss Label:** 6H7AGP	DRW: ... / ... 07/24/2024

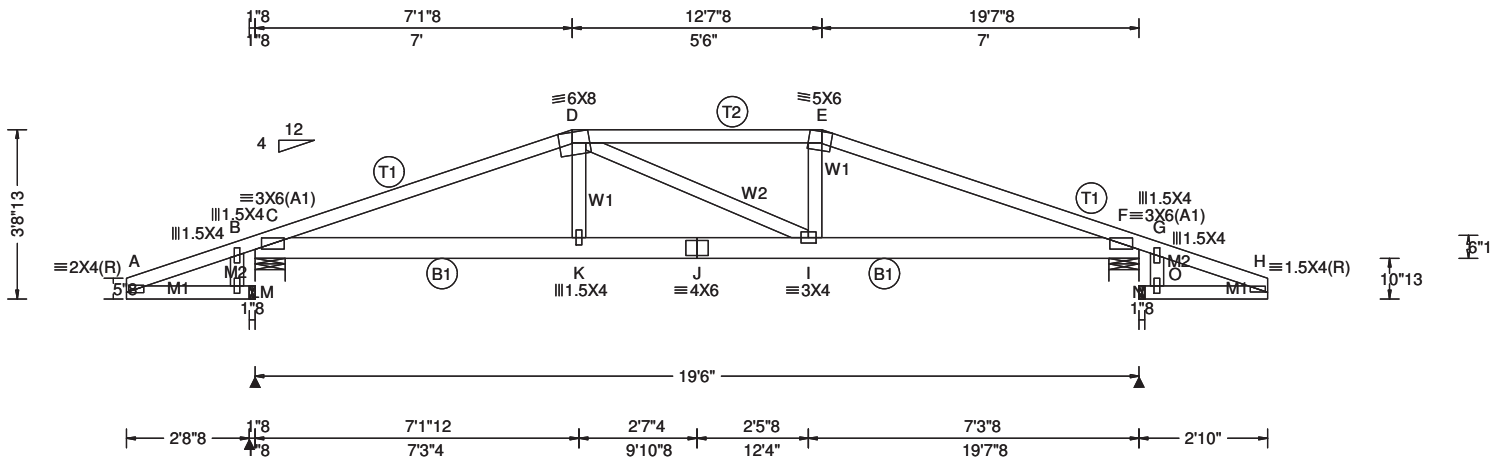

Loading Criteria (psf)

TCLL: 30.00
TCDL: 15.00
BCLL: 0.00
BCDL: 10.00
Des Ld: 55.00
NCBCLL: 0.00
Soffit: 2.00
Load Duration: 1.25
Spacing: 24.0 "

Wind Criteria

Wind Std: ASCE 7-22
Speed: 175 mph
Enclosure: Part. Enc.
Risk Category: II
EXP: C Kzt: NA
Mean Height: 15.00 ft
TCDL: 6.0 psf
BCDL: 6.0 psf
MWFRS Parallel Dist: 0 to h/2
C&C Dist a: 3.00 ft
Loc. from endwall: not in 9.00 ft
GCpi: 0.55
Wind Duration: 1.60

Snow Criteria (Pg,Pf in PSF)

Pg: NA Ct: NA CAT: NA
Pf: NA Ce: NA
Lu: NA Cs: NA
Snow Duration: NA

Building Code:
FBC 8th Ed. 2023 Res. HVHZ
TPI Std: 2014
Rep Fac: No
FT/RT:20(0)/10(0)
Plate Type(s):
WAVE

Defl/CSI Criteria

PP Deflection in	loc	L/defl	L/#
VERT(LL): -0.154	I	999	360
VERT(CL): 0.183	I	999	240
HORZ(LL): -0.040	F	-	-
HORZ(TL): 0.045	F	-	-

Creep Factor: 2.0
Max TC CSI: 0.680
Max BC CSI: 0.627
Max Web CSI: 0.073
Mfg Specified Camber:

VIEW Ver: 23.02.01A.1204.18

▲ Maximum Reactions (lbs)

Loc	Gravity R+	/ R-	/ Rh	Non-Gravity / Rw	/ U	/ RL
M	-	/-	/266	/-	/-	/181
B	2250	/-	/319	/-	/1912	/162
G	2272	/-	/-	/-	/1930	/-
N	-	/-	/52	/-	/-	/18

Wind reactions based on MWFRS
M Brg Wid = 1.5 Min Req = -
B Brg Wid = 8.0 Min Req = 1.5 (Truss)
G Brg Wid = 8.0 Min Req = 1.5 (Truss)
N Brg Wid = 1.5 Min Req = -
Bearings B & F are a rigid surface.

Maximum Top Chord Forces Per Ply (lbs)

Chords	Tens.	Comp.	Chords	Tens.	Comp.
A - B	151	- 107	E - F	2172	- 2368
B - C	166	- 117	F - G	54	- 40
C - D	2198	- 2403	G - H	53	- 40
D - E	2062	- 2239			

Maximum Bot Chord Forces Per Ply (lbs)

Chords	Tens.	Comp.	Chords	Tens.	Comp.
C - K	2251	- 2057	J - I	2270	- 2078
K - J	2270	- 2078	I - F	2217	- 2031

Maximum Web Forces Per Ply (lbs)

Webs	Tens.	Comp.	Webs	Tens.	Comp.
A - L	89	- 130	I - E	315	- 348
B - L	16	- 8	N - O	26	- 15
L - M	90	- 133	O - G	5	0
D - K	323	- 351	O - H	21	- 22
D - I	7	- 18			

Lumber

Top chord: 2x4 SP #2; T2 2x4 SP #1;
Bot chord: 2x6 SP #2;
Webs: 2x4 SP #2;
Lt Level Return: 2x4 SP #2;
Rt Level Return: 2x4 SP #2;

Nailnote

Nail Schedule:0.128"x3", min. nails
Top Chord: 1 Row @12.00" o.c.
Bot Chord: 1 Row @12.00" o.c.
Webs : 1 Row @ 4" o.c.
Use equal spacing between rows and stagger nails in each row to avoid splitting.

Special Loads

------(Lumber Dur.Fac.=1.25 / Plate Dur.Fac.=1.25)

TC: From	90 plf at	-2.83 to	90 plf at	7.00
TC: From	45 plf at	7.00 to	45 plf at	12.50
TC: From	90 plf at	12.50 to	90 plf at	22.33
BC: From	20 plf at	0.00 to	20 plf at	7.01
BC: From	10 plf at	7.01 to	10 plf at	12.49
BC: From	20 plf at	12.49 to	20 plf at	19.50
PLB: From	4 plf at	-2.79 to	4 plf at	-0.17
PLB: From	4 plf at	19.66 to	4 plf at	22.29

TC: 230 lb Conc. Load at 7.01, 9.06,10.44,12.49
BC: 535 lb Conc. Load at 7.01,12.49
BC: 93 lb Conc. Load at 9.06,10.44

Wind

Wind loads and reactions based on MWFRS.

Wind loading based on both gable and hip roof types.

Additional Notes

The maximum horizontal reaction is 319#

***** BEARING ANALOG MODIFIED! *****

****WARNING**** READ AND FOLLOW ALL NOTES ON THIS DRAWING!
****IMPORTANT**** FURNISH THIS DRAWING TO ALL CONTRACTORS INCLUDING THE INSTALLERS
Trusses require extreme care in fabricating, handling, shipping, installing and bracing. Refer to and follow the latest edition of BCSI (Building Component Safety Information, by TPI and SBCA) for safety practices prior to performing these functions. Installers shall provide temporary bracing per BCSI. Unless noted otherwise, top chord shall have properly attached structural sheathing and bottom chord shall have a properly attached rigid ceiling. Locations shown for permanent lateral restraint of webs shall have continuous lateral restraint (CLR), installed with diagonal bracing installed on the CLR per BCSI sections B3, B7, or B10, as applicable. Apply plates to each face of truss and position as shown above and on the Joint Details, unless noted otherwise. Refer to drawings 160A-Z for standard plate positions. Refer to job's General Notes page for additional information.
Alpine, a division of ITW Building Components Group Inc. shall not be responsible for any deviation from this drawing, any failure to build the truss in conformance with ANSI/TPI 1, or for handling, shipping, installation and bracing of trusses. A seal on this drawing or cover page listing this drawing, indicates acceptance of professional engineering responsibility solely for the design shown. The suitability and use of this drawing for any structure is the responsibility of the Building Designer per ANSI/TPI 1 Sec.2.
For more information see these web sites: Alpine: alpineitw.com; TPI: tpinst.org; SBCA: sbcacomponents.com; ICC: iccsafe.org; AWC: awc.org

SEQN: 139507 / T120 / COMN FROM:	Ply: 1 Qty: 3 Wgt: 102.2 lbs	**Job Number:** 24070306 7725 RES. **Truss Label:** 7T	DRW: ... / ... 07/24/2024

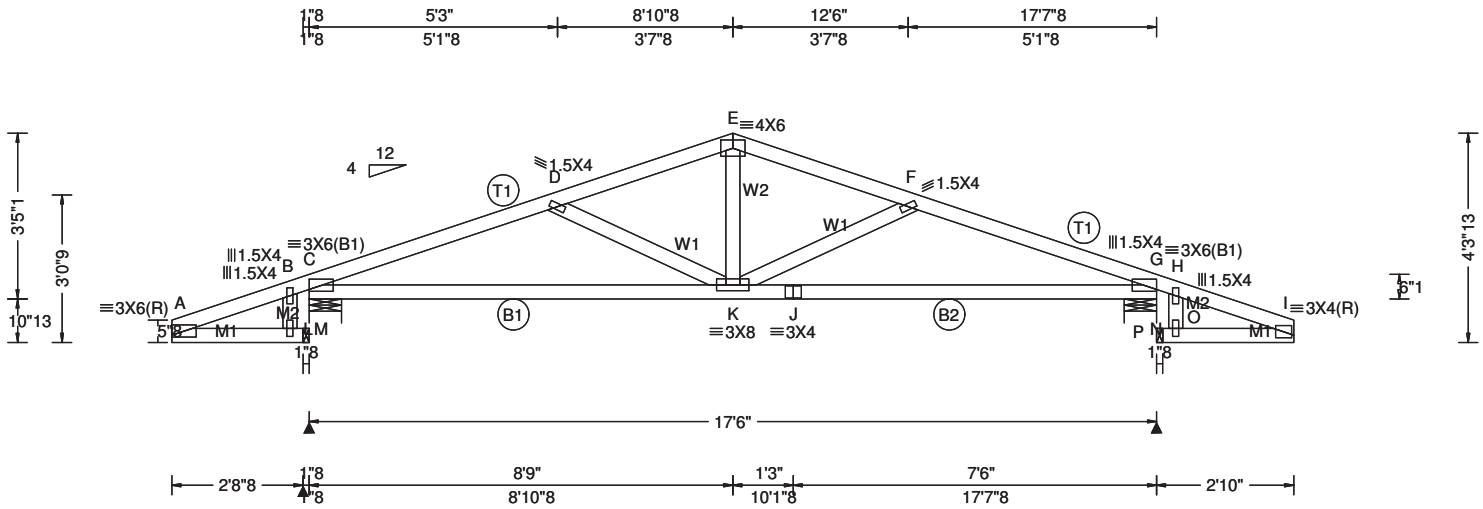

Loading Criteria (psf)

TCLL:	30.00
TCDL:	15.00
BCLL:	0.00
BCDL:	10.00
Des Ld:	55.00
NCBCLL:	10.00
Soffit:	2.00

Load Duration: 1.25
Spacing: 24.0 "

Wind Criteria
Wind Std: ASCE 7-22
Speed: 175 mph
Enclosure: Closed
Risk Category: II
EXP: C Kzt: NA
Mean Height: 21.99 ft
TCDL: 6.0 psf
BCDL: 6.0 psf
MWFRS Parallel Dist: h/2 to h
C&C Dist a: 3.00 ft
Loc. from endwall: not in 9.00 ft
GCpi: 0.18
Wind Duration: 1.60

Snow Criteria (Pg,Pf in PSF)
Pg: NA Ct: NA CAT: NA
Pf: NA Ce: NA
Lu: NA Cs: NA
Snow Duration: NA

Building Code:
FBC 8th Ed. 2023 Res. HVHZ
TPI Std: 2014
Rep Fac: Yes
FT/RT:20(0)/10(0)
Plate Type(s):
WAVE

Defl/CSI Criteria

PP Deflection in	loc	L/defl	L/#
VERT(LL): 0.120	K	999	360
VERT(CL): 0.213	K	948	240
HORZ(LL): 0.029	G	-	-
HORZ(TL): 0.053	G	-	-

Creep Factor: 2.0
Max TC CSI: 0.746
Max BC CSI: 0.991
Max Web CSI: 0.134
Mfg Specified Camber:

VIEW Ver: 23.02.01A.1204.18

▲ Maximum Reactions (lbs)

Loc	Gravity R+	Gravity / R-	/ Rh	Non-Gravity / Rw	/ U	/ RL
M	-	/-	/244	/-	/-	/311
C	1209	/-	/217	/821	/858	/315
P	1223	/-	/-	/791	/862	/-
N	-	/-	/106	/-	/-	/458

Wind reactions based on C&C
M Brg Wid = 1.5 Min Req = -
C Brg Wid = 8.0 Min Req = 1.5 (Truss)
P Brg Wid = 8.0 Min Req = 1.5 (Truss)
N Brg Wid = 1.5 Min Req = -
Bearings C & P are a rigid surface.

Maximum Top Chord Forces Per Ply (lbs)

Chords	Tens.	Comp.	Chords	Tens.	Comp.
A - B	283	- 274	E - F	790	- 1297
B - C	286	- 253	F - G	1086	- 1728
C - D	1079	- 1748	G - H	489	- 381
D - E	796	- 1299	H - I	464	- 374

Maximum Bot Chord Forces Per Ply (lbs)

Chords	Tens.	Comp.	Chords	Tens.	Comp.
C - K	3020	- 1838	J - G	2924	- 1698
K - J	1650	- 993			

Maximum Web Forces Per Ply (lbs)

Webs	Tens.	Comp.	Webs	Tens.	Comp.
A - L	306	- 276	K - F	461	- 407
B - L	56	- 14	N - O	397	- 458
L - M	311	- 280	O - H	163	- 112
D - K	461	- 442	O - I	396	- 462
E - K	452	- 173			

Lumber

Top chord: 2x4 SP #2;
Bot chord: 2x4 SP #1; B2 2x4 SP SS Dense;
Webs: 2x4 SP #2;
Lt Level Return: 2x4 SP #2;
Rt Level Return: 2x4 SP #2;

Wind

Member design based on both MWFRS and C&C.

Wind loading based on both gable and hip roof types.

Additional Notes

The maximum horizontal reaction is 244#

***** BEARING ANALOG MODIFIED! *****

****WARNING**** READ AND FOLLOW ALL NOTES ON THIS DRAWING!
****IMPORTANT**** FURNISH THIS DRAWING TO ALL CONTRACTORS INCLUDING THE INSTALLERS
Trusses require extreme care in fabricating, handling, shipping, installing and bracing. Refer to and follow the latest edition of BCSI (Building Component Safety Information, by TPI and SBCA) for safety practices prior to performing these functions. Installers shall provide temporary bracing per BCSI. Unless noted otherwise, top chord shall have properly attached structural sheathing and bottom chord shall have a properly attached rigid ceiling. Locations shown for permanent lateral restraint of webs shall have continuous lateral restraint (CLR), installed with diagonal bracing installed on the CLR per BCSI sections B3, B7, or B10, as applicable. Apply plates to each face of truss and position as shown above and on the Joint Details, unless noted otherwise. Refer to drawings 160A-Z for standard plate positions. Refer to job's General Notes page for additional information.
Alpine, a division of ITW Building Components Group Inc. shall not be responsible for any deviation from this drawing, any failure to build the truss in conformance with ANSI/TPI 1, or for handling, shipping, installation and bracing of trusses. A seal on this drawing or cover page listing this drawing, indicates acceptance of professional engineering responsibility solely for the design shown. The suitability and use of this drawing for any structure is the responsibility of the Building Designer per ANSI/TPI 1 Sec.2.
For more information see these web sites: Alpine: alpineitw.com; TPI: tpinst.org; SBCA: sbcacomponents.com; ICC: iccsafe.org; AWC: awc.org

SEQN: 206599 / T121 / COMN FROM:	Ply: 1 Qty: 1 Wgt: 74.2 lbs	**Job Number:** 24070306 7725 RES. **Truss Label:** 7TA	DRW: ... / ... 07/24/2024

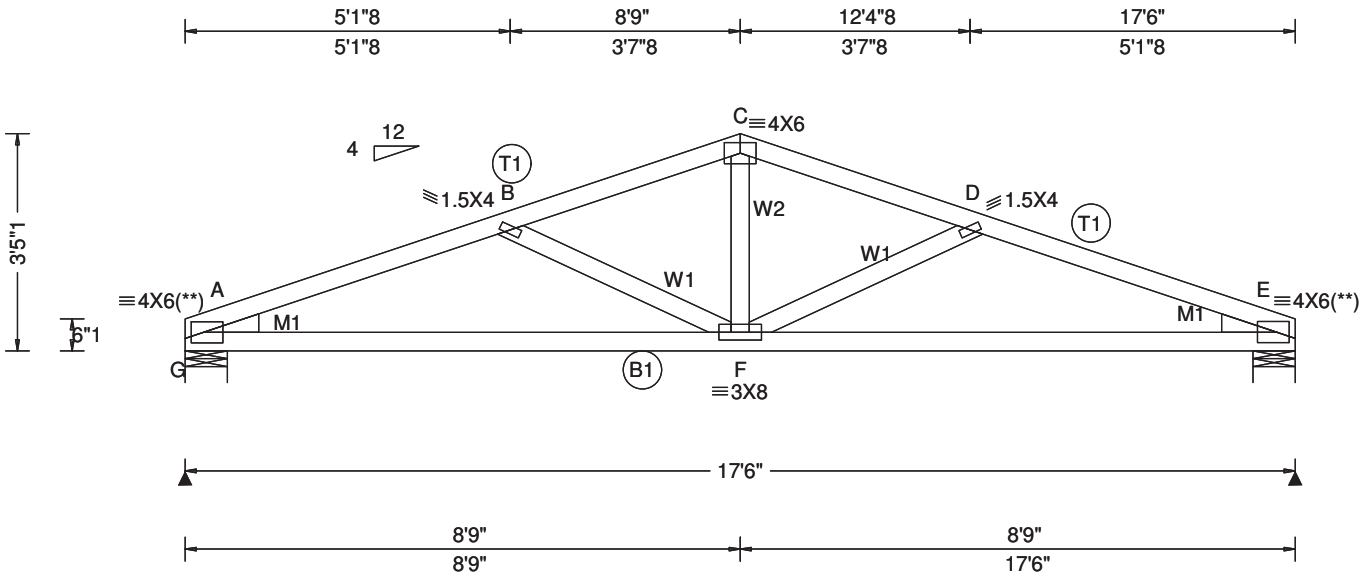

Loading Criteria (psf)

TCLL:	30.00
TCDL:	15.00
BCLL:	0.00
BCDL:	10.00
Des Ld:	55.00
NCBCLL:	10.00
Soffit:	2.00

Load Duration: 1.25
Spacing: 24.0 "

Wind Criteria
Wind Std: ASCE 7-22
Speed: 175 mph
Enclosure: Closed
Risk Category: II
EXP: C Kzt: NA
Mean Height: 22.46 ft
TCDL: 6.0 psf
BCDL: 6.0 psf
MWFRS Parallel Dist: h/2 to h
C&C Dist a: 3.00 ft
Loc. from endwall: not in 9.00 ft
GCpi: 0.18
Wind Duration: 1.60

Snow Criteria (Pg,Pf in PSF)
Pg: NA Ct: NA CAT: NA
Pf: NA Ce: NA
Lu: NA Cs: NA
Snow Duration: NA

Building Code:
FBC 8th Ed. 2023 Res. HVHZ
TPI Std: 2014
Rep Fac: Yes
FT/RT:20(0)/10(0)
Plate Type(s):
WAVE

Defl/CSI Criteria

PP Deflection in	loc	L/defl	L/#
VERT(LL): 0.074	F	999	360
VERT(CL): 0.137	F	999	240
HORZ(LL): 0.024	E	-	-
HORZ(TL): 0.044	E	-	-

Creep Factor: 2.0
Max TC CSI: 0.403
Max BC CSI: 0.678
Max Web CSI: 0.138
Mfg Specified Camber:

VIEW Ver: 23.02.01A.1204.18

▲ Maximum Reactions (lbs)

Loc	Gravity R+	/ R-	/ Rh	Non-Gravity / Rw	/ U	/ RL
G	962	/-	/-	/626	/575	/85
E	963	/-	/-	/626	/575	/-

Wind reactions based on C&C
G Brg Wid = 8.0 Min Req = 1.5 (Truss)
E Brg Wid = 8.0 Min Req = 1.5 (Truss)
Bearings G & E are a rigid surface.

Maximum Top Chord Forces Per Ply (lbs)

Chords	Tens.	Comp.	Chords	Tens.	Comp.
A - B	1249	- 1918	C - D	970	- 1487
B - C	971	- 1487	D - E	1251	- 1918

Maximum Bot Chord Forces Per Ply (lbs)

Chords	Tens.	Comp.	Chords	Tens.	Comp.
A - F	1765	- 1116	F - E	1765	- 1089

Maximum Web Forces Per Ply (lbs)

Webs	Tens.	Comp.	Webs	Tens.	Comp.
B - F	446	- 456	F - D	447	- 456
C - F	578	- 272			

Lumber
Top chord: 2x4 SP #2;
Bot chord: 2x4 SP #2;
Webs: 2x4 SP #2;
Lt Wedge: 2x4 SP #2;Rt Wedge: 2x4 SP #2;

Plating Notes
(**) 2 plate(s) require special positioning. Refer to scaled plate plot details for special positioning requirements.

Wind
Member design based on both MWFRS and C&C.
Wind loading based on both gable and hip roof types.

****WARNING**** READ AND FOLLOW ALL NOTES ON THIS DRAWING!
****IMPORTANT**** FURNISH THIS DRAWING TO ALL CONTRACTORS INCLUDING THE INSTALLERS
Trusses require extreme care in fabricating, handling, shipping, installing and bracing. Refer to and follow the latest edition of BCSI (Building Component Safety Information, by TPI and SBCA) for safety practices prior to performing these functions. Installers shall provide temporary bracing per BCSI. Unless noted otherwise, top chord shall have properly attached structural sheathing and bottom chord shall have a properly attached rigid ceiling. Locations shown for permanent lateral restraint of webs shall have continuous lateral restraint (CLR), installed with diagonal bracing installed on the CLR per BCSI sections B3, B7, or B10, as applicable. Apply plates to each face of truss and position as shown above and on the Joint Details, unless noted otherwise. Refer to drawings 160A-Z for standard plate positions. Refer to job's General Notes page for additional information.
Alpine, a division of ITW Building Components Group Inc. shall not be responsible for any deviation from this drawing, any failure to build the truss in conformance with ANSI/TPI 1, or for handling, shipping, installation and bracing of trusses. A seal on this drawing or cover page listing this drawing, indicates acceptance of professional engineering responsibility solely for the design shown. The suitability and use of this drawing for any structure is the responsibility of the Building Designer per ANSI/TPI 1 Sec.2.
For more information see these web sites: Alpine: alpineitw.com; TPI: tpinst.org; SBCA: sbcacomponents.com; ICC: iccsafe.org; AWC: awc.org

SEQN: 139513 / T118 / COMN FROM:	Ply: 1 Qty: 3 Wgt: 68.6 lbs	**Job Number:** 24070306 7725 RES. **Truss Label:** 7TB	DRW: ... / ... 07/24/2024

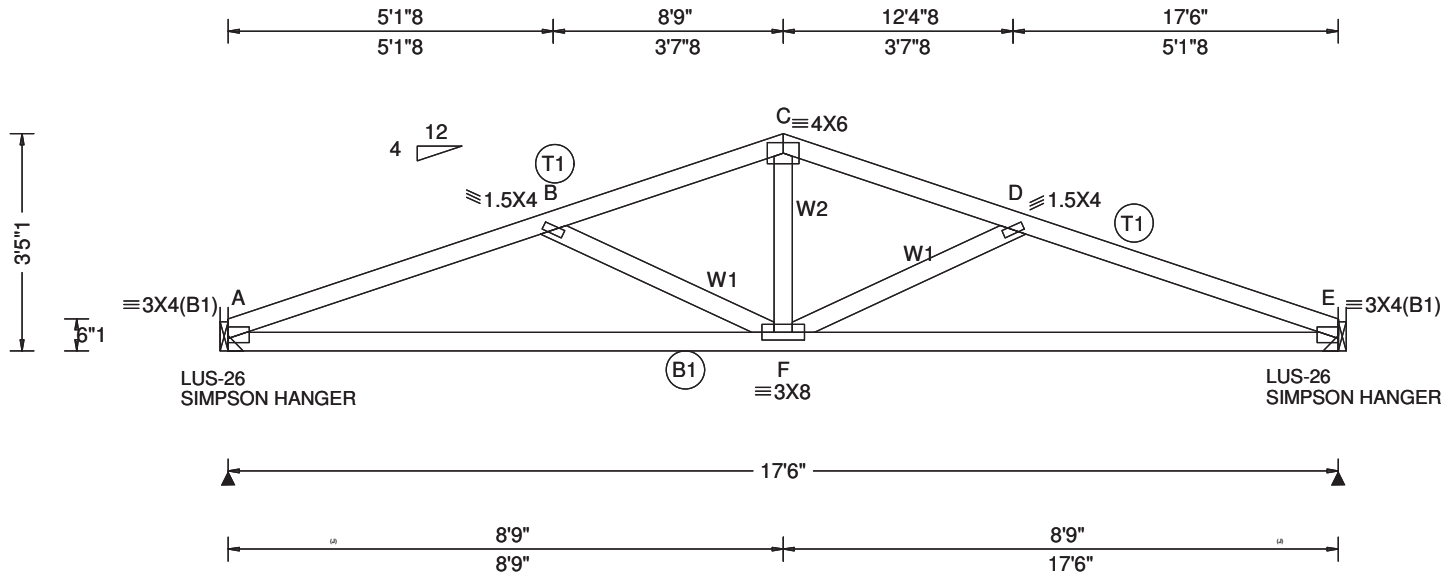

Loading Criteria (psf)

TCLL:	30.00
TCDL:	15.00
BCLL:	0.00
BCDL:	10.00
Des Ld:	55.00
NCBCLL:	10.00
Soffit:	2.00

Load Duration: 1.25
Spacing: 24.0 "

Wind Criteria
Wind Std: ASCE 7-22
Speed: 175 mph
Enclosure: Closed
Risk Category: II
EXP: C Kzt: NA
Mean Height: 22.46 ft
TCDL: 6.0 psf
BCDL: 6.0 psf
MWFRS Parallel Dist: h/2 to h
C&C Dist a: 3.00 ft
Loc. from endwall: not in 9.00 ft
GCpi: 0.18
Wind Duration: 1.60

Snow Criteria (Pg,Pf in PSF)
Pg: NA Ct: NA CAT: NA
Pf: NA Ce: NA
Lu: NA Cs: NA
Snow Duration: NA

Building Code:
FBC 8th Ed. 2023 Res. HVHZ
TPI Std: 2014
Rep Fac: Yes
FT/RT:20(0)/10(0)
Plate Type(s):
WAVE

Defl/CSI Criteria

PP Deflection in	loc	L/defl	L/#
VERT(LL): 0.090	F	999	360
VERT(CL): 0.164	F	999	240
HORZ(LL): 0.030	E	-	-
HORZ(TL): 0.054	E	-	-

Creep Factor: 2.0
Max TC CSI: 0.536
Max BC CSI: 0.743
Max Web CSI: 0.141
Mfg Specified Camber:

VIEW Ver: 23.02.01A.1204.18

▲ Maximum Reactions (lbs)

	Gravity			Non-Gravity		
Loc	R+	/ R-	/ Rh	/ Rw	/ U	/ RL
A	962	/-	/-	/626	/575	/85
E	962	/-	/-	/626	/575	/-

Wind reactions based on C&C
A Brg Wid = - Min Req = -
E Brg Wid = - Min Req = -

Maximum Top Chord Forces Per Ply (lbs)

Chords	Tens.	Comp.	Chords	Tens.	Comp.
A - B	1263	- 1950	C - D	958	- 1486
B - C	959	- 1486	D - E	1265	- 1950

Maximum Bot Chord Forces Per Ply (lbs)

Chords	Tens.	Comp.	Chords	Tens.	Comp.
A - F	1775	- 1136	F - E	1775	- 1109

Maximum Web Forces Per Ply (lbs)

Webs	Tens.	Comp.	Webs	Tens.	Comp.
B - F	484	- 467	F - D	484	- 467
C - F	578	- 276			

Lumber
Top chord: 2x4 SP #2;
Bot chord: 2x4 SP #2;
Webs: 2x4 SP #2;

Hangers / Ties
(J) Hanger Support Required, by others

Wind
Member design based on both MWFRS and C&C.
Wind loading based on both gable and hip roof types.

****WARNING**** READ AND FOLLOW ALL NOTES ON THIS DRAWING!
****IMPORTANT**** FURNISH THIS DRAWING TO ALL CONTRACTORS INCLUDING THE INSTALLERS

Trusses require extreme care in fabricating, handling, shipping, installing and bracing. Refer to and follow the latest edition of BCSI (Building Component Safety Information, by TPI and SBCA) for safety practices prior to performing these functions. Installers shall provide temporary bracing per BCSI. Unless noted otherwise, top chord shall have properly attached structural sheathing and bottom chord shall have a properly attached rigid ceiling. Locations shown for permanent lateral restraint of webs shall have continuous lateral restraint (CLR), installed with diagonal bracing installed on the CLR per BCSI sections B3, B7, or B10, as applicable. Apply plates to each face of truss and position as shown above and on the Joint Details, unless noted otherwise. Refer to drawings 160A-Z for standard plate positions. Refer to job's General Notes page for additional information.

Alpine, a division of ITW Building Components Group Inc. shall not be responsible for any deviation from this drawing, any failure to build the truss in conformance with ANSI/TPI 1, or for handling, shipping, installation and bracing of trusses. A seal on this drawing or cover page listing this drawing, indicates acceptance of professional engineering responsibility solely for the design shown. The suitability and use of this drawing for any structure is the responsibility of the Building Designer per ANSI/TPI 1 Sec.2.

For more information see these web sites: Alpine: alpineitw.com; TPI: tpinst.org; SBCA: sbcacomponents.com; ICC: iccsafe.org; AWC: awc.org

SEQN: 139601 / T23 / HIPS FROM:	Ply: 1 Qty: 1 Wgt: 145.6 lbs	**Job Number:** 24070306 7725 RES. **Truss Label:** 7H7GP	DRW: ... / ... 07/24/2024

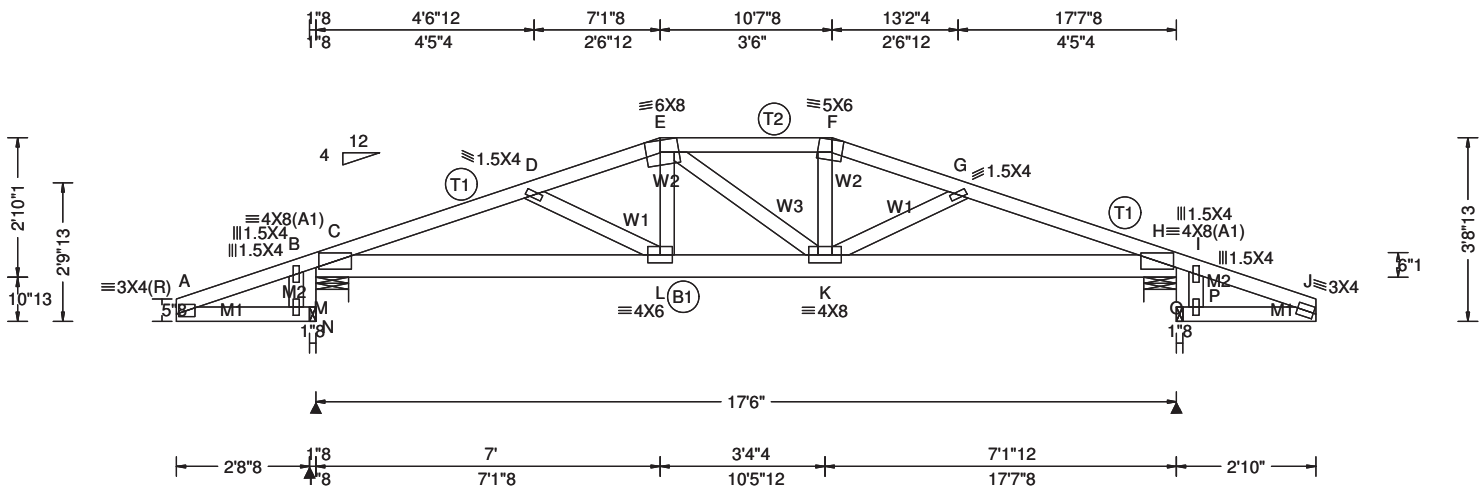

Loading Criteria (psf)

TCLL:	30.00
TCDL:	15.00
BCLL:	0.00
BCDL:	10.00
Des Ld:	55.00
NCBCLL:	10.00
Soffit:	2.00

Load Duration: 1.25
Spacing: 24.0 "

Wind Criteria
Wind Std: ASCE 7-22
Speed: 175 mph
Enclosure: Part. Enc.
Risk Category: II
EXP: C Kzt: NA
Mean Height: 21.70 ft
TCDL: 6.0 psf
BCDL: 6.0 psf
MWFRS Parallel Dist: 0 to h/2
C&C Dist a: 3.00 ft
Loc. from endwall: not in 9.00 ft
GCpi: 0.55
Wind Duration: 1.60

Snow Criteria (Pg,Pf in PSF)
Pg: NA Ct: NA CAT: NA
Pf: NA Ce: NA
Lu: NA Cs: NA
Snow Duration: NA

Building Code:
FBC 8th Ed. 2023 Res. HVHZ
TPI Std: 2014
Rep Fac: Varies by Ld Case
FT/RT:20(0)/10(0)
Plate Type(s):
WAVE

Defl/CSI Criteria

PP Deflection in	loc	L/defl	L/#
VERT(LL): -0.211	K	979	360
VERT(CL): 0.240	K	861	240
HORZ(LL): -0.044	H	-	-
HORZ(TL): 0.048	H	-	-

Creep Factor: 2.0
Max TC CSI: 0.947
Max BC CSI: 0.384
Max Web CSI: 0.227
Mfg Specified Camber:

VIEW Ver: 23.02.01A.1204.18

▲ Maximum Reactions (lbs)

Loc	Gravity R+	Gravity / R-	Non-Gravity / Rh	Non-Gravity / Rw	Non-Gravity / U	Non-Gravity / RL
N	-	/-	/241	/-	/-	/228
B	2007	/-	/259	/-	/1866	/111
I	2024	/-	/-	/-	/1879	/-
O	-	/-	/107	/-	/-	/117

Wind reactions based on MWFRS
N Brg Wid = 1.5 Min Req = -
B Brg Wid = 8.0 Min Req = 1.7 (Truss)
I Brg Wid = 8.0 Min Req = 1.7 (Truss)
O Brg Wid = 1.5 Min Req = -
Bearings B & H are a rigid surface.

Maximum Top Chord Forces Per Ply (lbs)

Chords	Tens.	Comp.	Chords	Tens.	Comp.
A - B	282	- 270	F - G	3720	- 3874
B - C	308	- 293	G - H	3968	- 4117
C - D	4015	- 4183	H - I	181	- 188
D - E	3763	- 3930	I - J	169	- 177
E - F	3557	- 3707			

Maximum Bot Chord Forces Per Ply (lbs)

Chords	Tens.	Comp.	Chords	Tens.	Comp.
C - L	4005	- 3850	K - H	3937	- 3802
L - K	3807	- 3659			

Maximum Web Forces Per Ply (lbs)

Webs	Tens.	Comp.	Webs	Tens.	Comp.
A - M	225	- 239	K - F	994	- 936
B - M	30	- 20	K - G	211	- 210
M - N	228	- 241	O - P	117	- 107
D - L	223	- 232	P - I	17	- 10
E - L	1008	- 937	P - J	122	- 114
E - K	38	- 19			

Lumber

Top chord: 2x4 SP #1; T2 2x4 SP #2;
Bot chord: 2x6 SP M-26;
Webs: 2x4 SP #2;
Lt Level Return: 2x4 SP #2;
Rt Level Return: 2x4 SP #2;

Special Loads

------(Lumber Dur.Fac.=1.25 / Plate Dur.Fac.=1.25)

TC: From	90 plf at	-2.83 to	90 plf at	7.00
TC: From	45 plf at	7.00 to	45 plf at	10.50
TC: From	90 plf at	10.50 to	90 plf at	20.33
BC: From	20 plf at	0.00 to	20 plf at	7.01
BC: From	10 plf at	7.01 to	10 plf at	10.49
BC: From	20 plf at	10.49 to	20 plf at	17.50
PLB: From	4 plf at	-2.79 to	4 plf at	-0.17
PLB: From	4 plf at	17.67 to	4 plf at	20.29

TC: 239 lb Conc. Load at 7.01, 8.75,10.49
BC: 499 lb Conc. Load at 7.01,10.49
BC: 80 lb Conc. Load at 8.75

Wind

Wind loads and reactions based on MWFRS.

Wind loading based on both gable and hip roof types.

Additional Notes

The maximum horizontal reaction is 259#

***** BEARING ANALOG MODIFIED! *****

****WARNING**** READ AND FOLLOW ALL NOTES ON THIS DRAWING!
****IMPORTANT**** FURNISH THIS DRAWING TO ALL CONTRACTORS INCLUDING THE INSTALLERS
Trusses require extreme care in fabricating, handling, shipping, installing and bracing. Refer to and follow the latest edition of BCSI (Building Component Safety Information, by TPI and SBCA) for safety practices prior to performing these functions. Installers shall provide temporary bracing per BCSI. Unless noted otherwise, top chord shall have properly attached structural sheathing and bottom chord shall have a properly attached rigid ceiling. Locations shown for permanent lateral restraint of webs shall have continuous lateral restraint (CLR), installed with diagonal bracing installed on the CLR per BCSI sections B3, B7, or B10, as applicable. Apply plates to each face of truss and position as shown above and on the Joint Details, unless noted otherwise. Refer to drawings 160A-Z for standard plate positions. Refer to job's General Notes page for additional information.
Alpine, a division of ITW Building Components Group Inc. shall not be responsible for any deviation from this drawing, any failure to build the truss in conformance with ANSI/TPI 1, or for handling, shipping, installation and bracing of trusses. A seal on this drawing or cover page listing this drawing, indicates acceptance of professional engineering responsibility solely for the design shown. The suitability and use of this drawing for any structure is the responsibility of the Building Designer per ANSI/TPI 1 Sec.2.
For more information see these web sites: Alpine: alpineitw.com; TPI: tpinst.org; SBCA: sbcacomponents.com; ICC: iccsafe.org; AWC: awc.org

SEQN: 206602 / T17 / COMN FROM:	Ply: 1 Qty: 12 Wgt: 74.2 lbs	**Job Number:** 24070306 7725 RES. **Truss Label:** 8T	DRW: ... / ... 07/24/2024

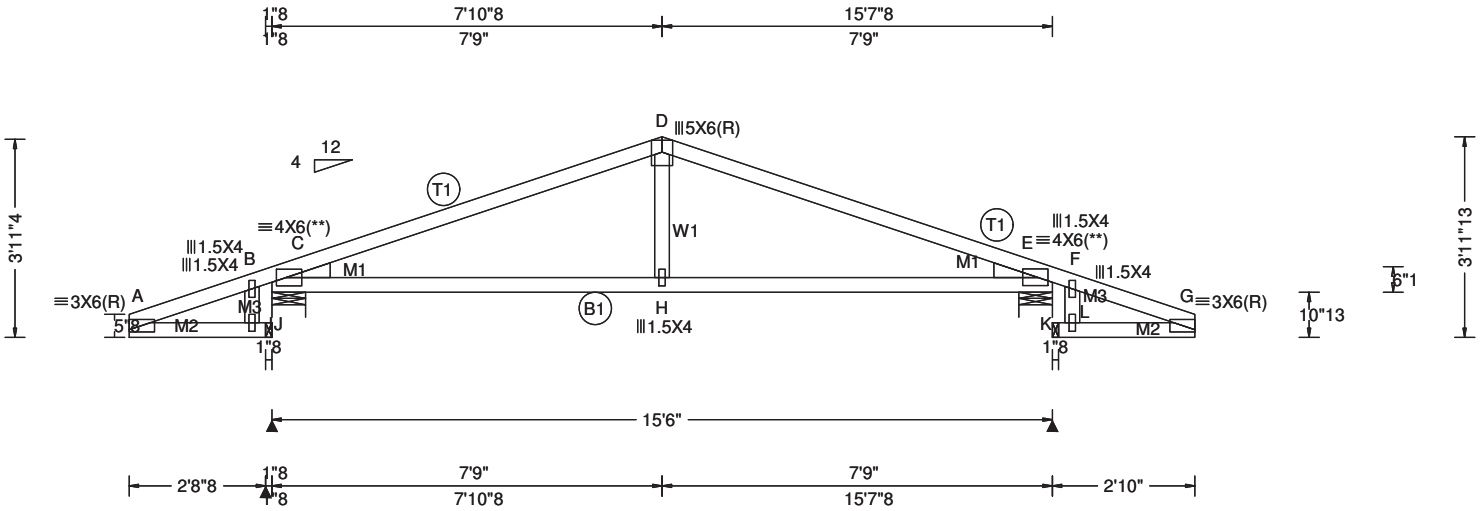

Loading Criteria (psf)

TCLL:	30.00
TCDL:	15.00
BCLL:	0.00
BCDL:	10.00
Des Ld:	55.00
NCBCLL:	10.00
Soffit:	2.00

Load Duration: 1.25
Spacing: 24.0 "

Wind Criteria
Wind Std: ASCE 7-22
Speed: 175 mph
Enclosure: Closed
Risk Category: II
EXP: C Kzt: NA
Mean Height: 15.32 ft
TCDL: 6.0 psf
BCDL: 6.0 psf
MWFRS Parallel Dist: h/2 to h
C&C Dist a: 3.00 ft
Loc. from endwall: not in 9.00 ft
GCpi: 0.18
Wind Duration: 1.60

Snow Criteria (Pg,Pf in PSF)
Pg: NA Ct: NA CAT: NA
Pf: NA Ce: NA
Lu: NA Cs: NA
Snow Duration: NA

Building Code:
FBC 8th Ed. 2023 Res. HVHZ
TPI Std: 2014
Rep Fac: Yes
FT/RT:20(0)/10(0)
Plate Type(s):
WAVE

Defl/CSI Criteria

PP Deflection in	loc	L/defl	L/#
VERT(LL): 0.042	H	999	360
VERT(CL): 0.072	H	999	240
HORZ(LL): 0.015	E	-	-
HORZ(TL): 0.026	E	-	-

Creep Factor: 2.0
Max TC CSI: 0.693
Max BC CSI: 0.577
Max Web CSI: 0.068
Mfg Specified Camber:

VIEW Ver: 23.02.01A.1204.18

▲ Maximum Reactions (lbs)

Loc	Gravity R+	Gravity / R-	Gravity / Rh	Non-Gravity / Rw	Non-Gravity / U	Non-Gravity / RL
J	-	/-	/233	/-	/-	/322
B	1100	/-	/209	/746	/800	/323
F	1108	/-	/-	/736	/802	/-
K	-	/-	/125	/-	/-	/411

Wind reactions based on C&C
J Brg Wid = 1.5 Min Req = -
B Brg Wid = 8.0 Min Req = 1.5 (Truss)
F Brg Wid = 8.0 Min Req = 1.5 (Truss)
K Brg Wid = 1.5 Min Req = -
Bearings B & E are a rigid surface.

Maximum Top Chord Forces Per Ply (lbs)

Chords	Tens.	Comp.	Chords	Tens.	Comp.
A - B	274	- 282	D - E	859	- 1383
B - C	300	- 287	E - F	478	- 384
C - D	874	- 1381	F - G	422	- 351

Maximum Bot Chord Forces Per Ply (lbs)

Chords	Tens.	Comp.	Chords	Tens.	Comp.
C - H	1352	- 827	H - E	1352	- 827

Maximum Web Forces Per Ply (lbs)

Webs	Tens.	Comp.	Webs	Tens.	Comp.
A - I	316	- 239	K - L	375	- 411
B - I	52	- 15	L - F	152	- 103
I - J	322	- 238	L - G	372	- 417
D - H	303	0			

Lumber

Top chord: 2x4 SP #2;
Bot chord: 2x4 SP #2;
Webs: 2x4 SP #2;
Lt Wedge: 2x4 SP #2;Rt Wedge: 2x4 SP #2;
Lt Level Return: 2x4 SP #2;
Rt Level Return: 2x4 SP #2;

Plating Notes

(**) 2 plate(s) require special positioning. Refer to scaled plate plot details for special positioning requirements.

Wind

Member design based on both MWFRS and C&C.

Wind loading based on both gable and hip roof types.

Additional Notes

The maximum horizontal reaction is 233#

***** BEARING ANALOG MODIFIED! *****

****WARNING**** READ AND FOLLOW ALL NOTES ON THIS DRAWING!
****IMPORTANT**** FURNISH THIS DRAWING TO ALL CONTRACTORS INCLUDING THE INSTALLERS
Trusses require extreme care in fabricating, handling, shipping, installing and bracing. Refer to and follow the latest edition of BCSI (Building Component Safety Information, by TPI and SBCA) for safety practices prior to performing these functions. Installers shall provide temporary bracing per BCSI. Unless noted otherwise, top chord shall have properly attached structural sheathing and bottom chord shall have a properly attached rigid ceiling. Locations shown for permanent lateral restraint of webs shall have continuous lateral restraint (CLR), installed with diagonal bracing installed on the CLR per BCSI sections B3, B7, or B10, as applicable. Apply plates to each face of truss and position as shown above and on the Joint Details, unless noted otherwise. Refer to drawings 160A-Z for standard plate positions. Refer to job's General Notes page for additional information.
Alpine, a division of ITW Building Components Group Inc. shall not be responsible for any deviation from this drawing, any failure to build the truss in conformance with ANSI/TPI 1, or for handling, shipping, installation and bracing of trusses. A seal on this drawing or cover page listing this drawing, indicates acceptance of professional engineering responsibility solely for the design shown. The suitability and use of this drawing for any structure is the responsibility of the Building Designer per ANSI/TPI 1 Sec.2.
For more information see these web sites: Alpine: alpineitw.com; TPI: tpinst.org; SBCA: sbcacomponents.com; ICC: iccsafe.org; AWC: awc.org

SEQN: 139604 / T33 / HIPS FROM: GO	Ply: 2 Qty: 2 Wgt: 92.4 lbs	**Job Number:** 24070306 7725 RES. **Truss Label:** 8H7G	DRW: ... / ... 07/24/2024

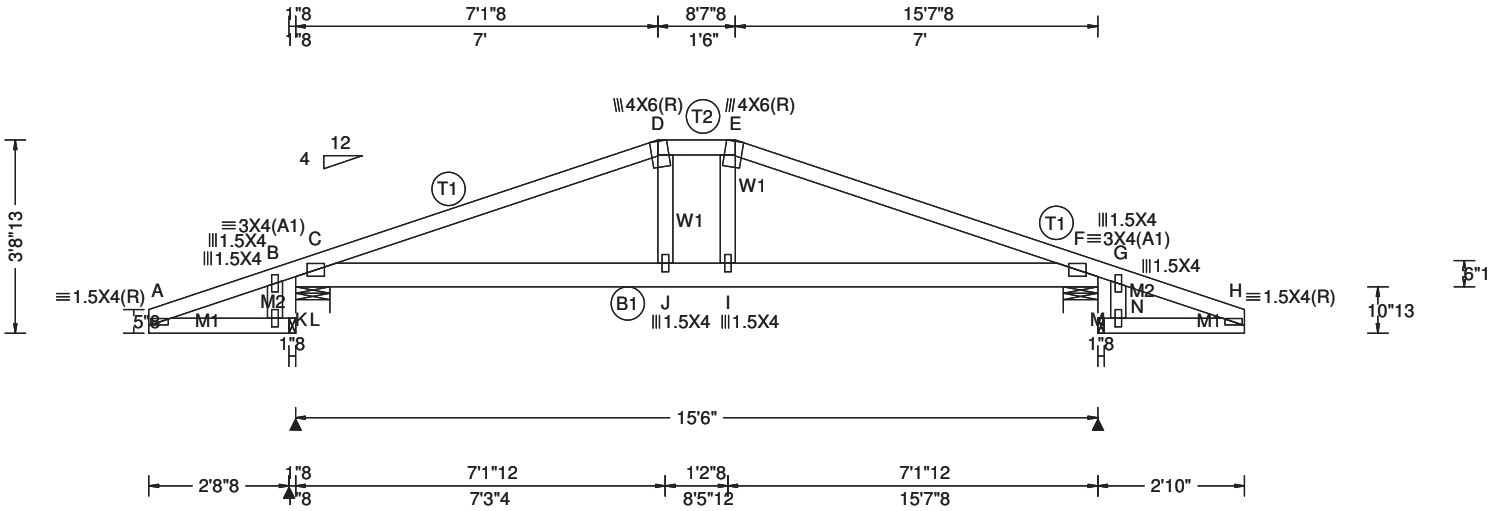

Loading Criteria (psf)

TCLL: 30.00
TCDL: 15.00
BCLL: 0.00
BCDL: 10.00
Des Ld: 55.00
NCBCLL: 0.00
Soffit: 2.00
Load Duration: 1.25
Spacing: 24.0 "

Wind Criteria

Wind Std: ASCE 7-22
Speed: 175 mph
Enclosure: Closed
Risk Category: II
EXP: C Kzt: NA
Mean Height: 15.20 ft
TCDL: 6.0 psf
BCDL: 6.0 psf
MWFRS Parallel Dist: 0 to h/2
C&C Dist a: 3.00 ft
Loc. from endwall: not in 9.00 ft
GCpi: 0.18
Wind Duration: 1.60

Snow Criteria (Pg,Pf in PSF)

Pg: NA Ct: NA CAT: NA
Pf: NA Ce: NA
Lu: NA Cs: NA
Snow Duration: NA

Building Code:
FBC 8th Ed. 2023 Res. HVHZ
TPI Std: 2014
Rep Fac: Varies by Ld Case
FT/RT:20(0)/10(0)
Plate Type(s):
WAVE

Defl/CSI Criteria

PP Deflection in	loc	L/defl	L/#
VERT(LL): 0.045	J	999	360
VERT(CL): 0.097	J	999	240
HORZ(LL): 0.014	F	-	-
HORZ(TL): 0.029	F	-	-

Creep Factor: 2.0
Max TC CSI: 0.475
Max BC CSI: 0.483
Max Web CSI: 0.058
Mfg Specified Camber:

VIEW Ver: 23.02.01A.1204.18

▲ Maximum Reactions (lbs)

Loc	Gravity R+	Gravity / R-	Non-Gravity / Rh	Non-Gravity / Rw	Non-Gravity / U	Non-Gravity / RL
L	-	/-	/1463	/-	/-	/143
B	2124	/-	/191	/-	/550	/21
G	2139	/-	/-	/-	/553	/-
M	-	/-	/1360	/-	/-	/148

Wind reactions based on MWFRS
L Brg Wid = 1.5 Min Req = -
B Brg Wid = 8.0 Min Req = 1.5 (Truss)
G Brg Wid = 8.0 Min Req = 1.5 (Truss)
M Brg Wid = 1.5 Min Req = -
Bearings B & F are a rigid surface.

Maximum Top Chord Forces Per Ply (lbs)

Chords	Tens.	Comp.	Chords	Tens.	Comp.
A - B	787	- 62	E - F	416	- 1301
B - C	821	- 66	F - G	773	- 57
C - D	416	- 1300	G - H	744	- 53
D - E	372	- 1201			

Maximum Bot Chord Forces Per Ply (lbs)

Chords	Tens.	Comp.	Chords	Tens.	Comp.
C - J	1866	- 407	I - F	1866	- 407
J - I	1881	- 410			

Maximum Web Forces Per Ply (lbs)

Webs	Tens.	Comp.	Webs	Tens.	Comp.
A - K	49	- 731	I - E	259	- 41
B - K	74	- 4	M - N	38	- 680
K - L	48	- 732	N - G	69	- 3
D - J	254	- 42	N - H	39	- 684

Lumber

Top chord: 2x4 SP #2;
Bot chord: 2x6 SP #2;
Webs: 2x4 SP #2;
Lt Level Return: 2x4 SP #2;
Rt Level Return: 2x4 SP #2;

Nailnote

Nail Schedule:0.128"x3", min. nails
Top Chord: 1 Row @10.25" o.c.
Bot Chord: 1 Row @12.00" o.c.
Webs : 1 Row @ 4" o.c.
Use equal spacing between rows and stagger nails in each row to avoid splitting.

Special Loads

------(Lumber Dur.Fac.=1.25 / Plate Dur.Fac.=1.25)

TC: From	90 plf at	-2.83 to	90 plf at	7.00
TC: From	45 plf at	7.00 to	45 plf at	8.50
TC: From	90 plf at	8.50 to	90 plf at	18.33
BC: From	20 plf at	0.00 to	20 plf at	7.01
BC: From	10 plf at	7.01 to	10 plf at	8.49
BC: From	20 plf at	8.49 to	20 plf at	15.50
PLB: From	4 plf at	-2.79 to	4 plf at	-0.17
PLB: From	4 plf at	15.67 to	4 plf at	18.29

TC: 555 lb Conc. Load at -2.58,18.08
TC: 253 lb Conc. Load at 7.01, 8.49
BC: 262 lb Conc. Load at 7.01, 8.49

Wind

Wind loads and reactions based on MWFRS.

Wind loading based on both gable and hip roof types.

Additional Notes

The maximum horizontal reaction is 1463#

***** BEARING ANALOG MODIFIED! *****

****WARNING**** READ AND FOLLOW ALL NOTES ON THIS DRAWING!
****IMPORTANT**** FURNISH THIS DRAWING TO ALL CONTRACTORS INCLUDING THE INSTALLERS

Trusses require extreme care in fabricating, handling, shipping, installing and bracing. Refer to and follow the latest edition of BCSI (Building Component Safety Information, by TPI and SBCA) for safety practices prior to performing these functions. Installers shall provide temporary bracing per BCSI. Unless noted otherwise, top chord shall have properly attached structural sheathing and bottom chord shall have a properly attached rigid ceiling. Locations shown for permanent lateral restraint of webs shall have continuous lateral restraint (CLR), installed with diagonal bracing installed on the CLR per BCSI sections B3, B7, or B10, as applicable. Apply plates to each face of truss and position as shown above and on the Joint Details, unless noted otherwise. Refer to drawings 160A-Z for standard plate positions. Refer to job's General Notes page for additional information.

Alpine, a division of ITW Building Components Group Inc. shall not be responsible for any deviation from this drawing, any failure to build the truss in conformance with ANSI/TPI 1, or for handling, shipping, installation and bracing of trusses. A seal on this drawing or cover page listing this drawing, indicates acceptance of professional engineering responsibility solely for the design shown. The suitability and use of this drawing for any structure is the responsibility of the Building Designer per ANSI/TPI 1 Sec.2.

For more information see these web sites: Alpine: alpineitw.com; TPI: tpinst.org; SBCA: sbcacomponents.com; ICC: iccsafe.org; AWC: awc.org

SEQN: 139618 / T74 / FLAT FROM:	Ply: 3 Qty: 1 Wgt: 142.8 lbs	**Job Number:** 24070306 7725 RES. **Truss Label:** 9FRTG	DRW: ... / ... 07/24/2024

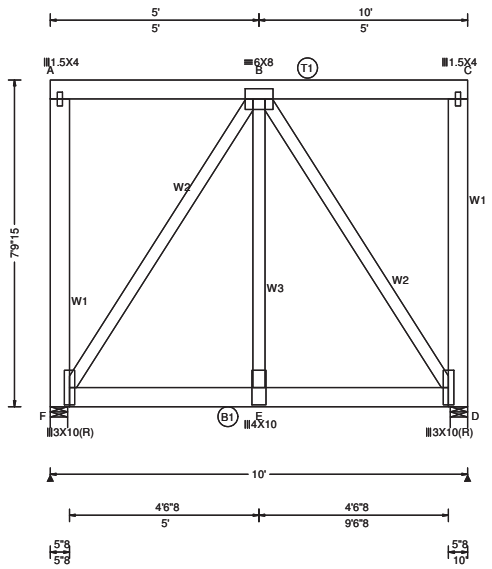

Loading Criteria (psf)

TCLL: 30.00
TCDL: 15.00
BCLL: 0.00
BCDL: 10.00
Des Ld: 55.00
NCBCLL: 0.00
Soffit: 2.00
Load Duration: 1.25
Spacing: 24.0 "

Wind Criteria

Wind Std: ASCE 7-22
Speed: 175 mph
Enclosure: Closed
Risk Category: II
EXP: C Kzt: NA
Mean Height: 19.83 ft
TCDL: 6.0 psf
BCDL: 6.0 psf
MWFRS Parallel Dist: 0 to h/2
C&C Dist a: 3.00 ft
Loc. from endwall: not in 25.00 ft
GCpi: 0.18
Wind Duration: 1.60

Snow Criteria (Pg,Pf in PSF)

Pg: NA Ct: NA CAT: NA
Pf: NA Ce: NA
Lu: NA Cs: NA
Snow Duration: NA

Building Code:
FBC 8th Ed. 2023 Res. HVHZ
TPI Std: 2014
Rep Fac: Yes
FT/RT:20(0)/10(0)
Plate Type(s):
WAVE

Defl/CSI Criteria

PP Deflection in	loc	L/defl	L/#
VERT(LL): 0.034	E	999	360
VERT(CL): 0.062	E	999	240
HORZ(LL): 0.004	D	-	-
HORZ(TL): 0.007	D	-	-

Creep Factor: 2.0
Max TC CSI: 0.053
Max BC CSI: 0.415
Max Web CSI: 0.588
Mfg Specified Camber:

VIEW Ver: 23.02.01A.1204.18

▲ Maximum Reactions (lbs)

Loc	Gravity R+	Gravity / R-	/ Rh	Non-Gravity / Rw	Non-Gravity / U	Non-Gravity / RL
F	7096	/-	/-	/-	/1799	/-
D	6610	/-	/-	/-	/1573	/-

Wind reactions based on MWFRS
F Brg Wid = 5.0 Min Req = 1.5 (Support)
D Brg Wid = 5.0 Min Req = 1.5 (Support)
Bearings F & D are a rigid surface.

Maximum Top Chord Forces Per Ply (lbs)

Chords	Tens.	Comp.	Chords	Tens.	Comp.
A - B	0	0	B - C	0	0

Maximum Bot Chord Forces Per Ply (lbs)

Chords	Tens.	Comp.	Chords	Tens.	Comp.
F - E	907	- 218	E - D	907	- 218

Maximum Web Forces Per Ply (lbs)

Webs	Tens.	Comp.	Webs	Tens.	Comp.
A - F	22	- 40	B - D	388	- 1615
F - B	388	- 1615	C - D	22	- 40
B - E	2604	- 584			

Lumber

Top chord: 2x6 SP #2;
Bot chord: 2x6 SP M-26;
Webs: 2x4 SP #2; W1 2x6 SP #2;

Nailnote

Nail Schedule:0.128"x3", min. nails
Top Chord: 1 Row @ 9.00" o.c.
Bot Chord: 2 Rows @ 2.50" o.c. (Each Row)
Webs : 1 Row @ 4" o.c.
Repeat nailing as each layer is applied. Use equal spacing between rows and stagger nails in each row to avoid splitting.

Special Loads

------(Lumber Dur.Fac.=1.25 / Plate Dur.Fac.=1.25)
TC: From 45 plf at 0.00 to 45 plf at 10.00
BC: From 10 plf at 0.46 to 10 plf at 9.54
TC: 1381 lb Conc. Load at 9.69
BC: 1531 lb Conc. Load at 0.81
BC: 1484 lb Conc. Load at 1.31
BC: 1502 lb Conc. Load at 2.81, 4.81, 6.81, 8.81
BC: 1382 lb Conc. Load at 3.31, 5.31

Purlins

The TC of this truss shall be braced with attached spans at 24" oc in lieu of structural sheathing.

Wind

Wind loads and reactions based on MWFRS.

End verticals not exposed to wind pressure.

Additional Notes

Truss must be installed as shown with top chord up.

****WARNING**** READ AND FOLLOW ALL NOTES ON THIS DRAWING!
****IMPORTANT**** FURNISH THIS DRAWING TO ALL CONTRACTORS INCLUDING THE INSTALLERS
Trusses require extreme care in fabricating, handling, shipping, installing and bracing. Refer to and follow the latest edition of BCSI (Building Component Safety Information, by TPI and SBCA) for safety practices prior to performing these functions. Installers shall provide temporary bracing per BCSI. Unless noted otherwise, top chord shall have properly attached structural sheathing and bottom chord shall have a properly attached rigid ceiling. Locations shown for permanent lateral restraint of webs shall have continuous lateral restraint (CLR), installed with diagonal bracing installed on the CLR per BCSI sections B3, B7, or B10, as applicable. Apply plates to each face of truss and position as shown above and on the Joint Details, unless noted otherwise. Refer to drawings 160A-Z for standard plate positions. Refer to job's General Notes page for additional information.
Alpine, a division of ITW Building Components Group Inc. shall not be responsible for any deviation from this drawing, any failure to build the truss in conformance with ANSI/TPI 1, or for handling, shipping, installation and bracing of trusses. A seal on this drawing or cover page listing this drawing, indicates acceptance of professional engineering responsibility solely for the design shown. The suitability and use of this drawing for any structure is the responsibility of the Building Designer per ANSI/TPI 1 Sec.2.
For more information see these web sites: Alpine: alpineitw.com; TPI: tpinst.org; SBCA: sbcacomponents.com; ICC: iccsafe.org; AWC: awc.org

SEQN: 139615 / T71 / FLAT FROM:	Ply: 3 Qty: 1 Wgt: 142.8 lbs	**Job Number:** 24070306 7725 RES. **Truss Label:** 9FRTAG	DRW: ... / ... 07/24/2024

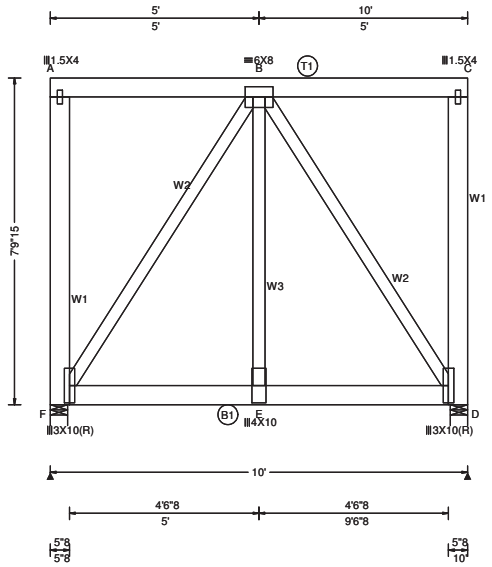

Loading Criteria (psf)

TCLL: 30.00
TCDL: 15.00
BCLL: 0.00
BCDL: 10.00
Des Ld: 55.00
NCBCLL: 0.00
Soffit: 2.00
Load Duration: 1.25
Spacing: 24.0 "

Wind Criteria

Wind Std: ASCE 7-22
Speed: 175 mph
Enclosure: Closed
Risk Category: II
EXP: C Kzt: NA
Mean Height: 19.83 ft
TCDL: 6.0 psf
BCDL: 6.0 psf
MWFRS Parallel Dist: 0 to h/2
C&C Dist a: 3.00 ft
Loc. from endwall: not in 25.00 ft
GCpi: 0.18
Wind Duration: 1.60

Snow Criteria (Pg,Pf in PSF)

Pg: NA Ct: NA CAT: NA
Pf: NA Ce: NA
Lu: NA Cs: NA
Snow Duration: NA

Building Code:
FBC 8th Ed. 2023 Res. HVHZ
TPI Std: 2014
Rep Fac: Yes
FT/RT:20(0)/10(0)
Plate Type(s):
WAVE

Defl/CSI Criteria

PP Deflection in	loc	L/defl	L/#
VERT(LL): 0.039	E	999	360
VERT(CL): 0.072	E	999	240
HORZ(LL): 0.004	D	-	-
HORZ(TL): 0.008	D	-	-

Creep Factor: 2.0
Max TC CSI: 0.060
Max BC CSI: 0.485
Max Web CSI: 0.682
Mfg Specified Camber:

VIEW Ver: 23.02.01A.1204.18

▲ Maximum Reactions (lbs)

Loc	Gravity R+	Gravity / R-	/ Rh	Non-Gravity / Rw	Non-Gravity / U	/ RL
F	7319	/-	/-	/-	/1801	/-
D	7390	/-	/-	/-	/1769	/-

Wind reactions based on MWFRS
F Brg Wid = 5.0 Min Req = 1.5 (Support)
D Brg Wid = 5.0 Min Req = 1.5 (Support)
Bearings F & D are a rigid surface.

Maximum Top Chord Forces Per Ply (lbs)

Chords	Tens.	Comp.	Chords	Tens.	Comp.
A - B	0	0	B - C	0	0

Maximum Bot Chord Forces Per Ply (lbs)

Chords	Tens.	Comp.	Chords	Tens.	Comp.
F - E	1046	- 259	E - D	1046	- 259

Maximum Web Forces Per Ply (lbs)

Webs	Tens.	Comp.	Webs	Tens.	Comp.
A - F	23	- 42	B - D	462	- 1864
F - B	462	- 1864	C - D	23	- 42
B - E	3019	- 707			

Lumber

Top chord: 2x6 SP #2;
Bot chord: 2x6 SP M-26;
Webs: 2x4 SP #2; W1 2x6 SP #2;

Nailnote

Nail Schedule:0.128"x3", min. nails
Top Chord: 1 Row @12.00" o.c.
Bot Chord: 2 Rows @ 2.00" o.c. (Each Row)
Webs : 1 Row @ 4" o.c.
Repeat nailing as each layer is applied. Use equal spacing between rows and stagger nails in each row to avoid splitting.

Special Loads

------(Lumber Dur.Fac.=1.25 / Plate Dur.Fac.=1.25)
TC: From 45 plf at 0.00 to 45 plf at 10.00
BC: From 10 plf at 0.46 to 10 plf at 9.54
BC: 1502 lb Conc. Load at 0.81, 2.81, 4.81, 6.81 8.81
BC: 1382 lb Conc. Load at 1.69
BC: 1484 lb Conc. Load at 3.69
BC: 1268 lb Conc. Load at 5.19
BC: 1263 lb Conc. Load at 7.19, 9.19

Purlins

The TC of this truss shall be braced with attached spans at 24" oc in lieu of structural sheathing.

Wind

Wind loads and reactions based on MWFRS.

End verticals not exposed to wind pressure.

Additional Notes

Truss must be installed as shown with top chord up.

****WARNING**** READ AND FOLLOW ALL NOTES ON THIS DRAWING!
****IMPORTANT**** FURNISH THIS DRAWING TO ALL CONTRACTORS INCLUDING THE INSTALLERS

Trusses require extreme care in fabricating, handling, shipping, installing and bracing. Refer to and follow the latest edition of BCSI (Building Component Safety Information, by TPI and SBCA) for safety practices prior to performing these functions. Installers shall provide temporary bracing per BCSI. Unless noted otherwise, top chord shall have properly attached structural sheathing and bottom chord shall have a properly attached rigid ceiling. Locations shown for permanent lateral restraint of webs shall have continuous lateral restraint (CLR), installed with diagonal bracing installed on the CLR per BCSI sections B3, B7, or B10, as applicable. Apply plates to each face of truss and position as shown above and on the Joint Details, unless noted otherwise. Refer to drawings 160A-Z for standard plate positions. Refer to job's General Notes page for additional information.

Alpine, a division of ITW Building Components Group Inc. shall not be responsible for any deviation from this drawing, any failure to build the truss in conformance with ANSI/TPI 1, or for handling, shipping, installation and bracing of trusses. A seal on this drawing or cover page listing this drawing, indicates acceptance of professional engineering responsibility solely for the design shown. The suitability and use of this drawing for any structure is the responsibility of the Building Designer per ANSI/TPI 1 Sec.2.

For more information see these web sites: Alpine: alpineitw.com; TPI: tpinst.org; SBCA: sbcacomponents.com; ICC: iccsafe.org; AWC: awc.org

SEQN: 204780 / T70 / FLAT FROM:	Ply: 3 Qty: 1 Wgt: 124.6 lbs	**Job Number:** 24070306 7725 RES. **Truss Label:** 9FRTBG	DRW: ... / ... 07/24/2024

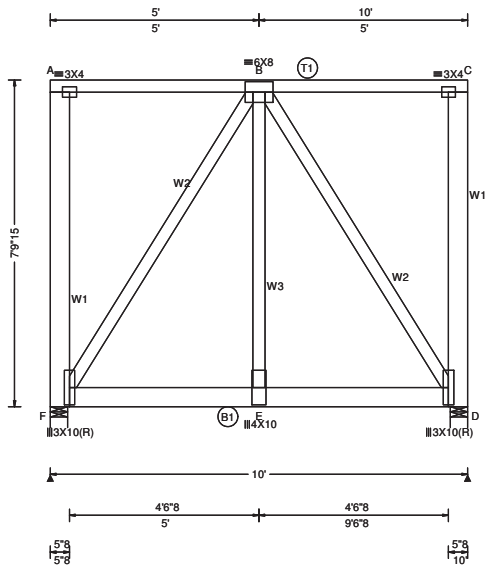

Loading Criteria (psf)
TCLL: 30.00
TCDL: 15.00
BCLL: 0.00
BCDL: 10.00
Des Ld: 55.00
NCBCLL: 0.00
Soffit: 2.00
Load Duration: 1.25
Spacing: 24.0 "

Wind Criteria
Wind Std: ASCE 7-22
Speed: 175 mph
Enclosure: Closed
Risk Category: II
EXP: C Kzt: NA
Mean Height: 19.83 ft
TCDL: 6.0 psf
BCDL: 6.0 psf
MWFRS Parallel Dist: 0 to h/2
C&C Dist a: 3.00 ft
Loc. from endwall: not in 25.00 ft
GCpi: 0.18
Wind Duration: 1.60

Snow Criteria (Pg,Pf in PSF)
Pg: NA Ct: NA CAT: NA
Pf: NA Ce: NA
Lu: NA Cs: NA
Snow Duration: NA

Building Code:
FBC 8th Ed. 2023 Res. HVHZ
TPI Std: 2014
Rep Fac: Yes
FT/RT:20(0)/10(0)
Plate Type(s):
WAVE

Defl/CSI Criteria

PP Deflection in	loc	L/defl	L/#
VERT(LL): 0.035	E	999	360
VERT(CL): 0.065	E	999	240
HORZ(LL): 0.004	D	-	-
HORZ(TL): 0.007	D	-	-

Creep Factor: 2.0
Max TC CSI: 0.079
Max BC CSI: 0.441
Max Web CSI: 0.611
Mfg Specified Camber:

VIEW Ver: 23.02.01A.1204.18

▲ Maximum Reactions (lbs)

Loc	R+	Gravity / R-	/ Rh	Non-Gravity / Rw	/ U	/ RL
F	6868	/-	/-	/-	/1637	/-
D	6819	/-	/-	/-	/1631	/-

Wind reactions based on MWFRS
F Brg Wid = 5.0 Min Req = 1.5 (Support)
D Brg Wid = 5.0 Min Req = 1.5 (Support)
Bearings F & D are a rigid surface.

Maximum Top Chord Forces Per Ply (lbs)

Chords	Tens.	Comp.	Chords	Tens.	Comp.
A - B	0	0	B - C	0	0

Maximum Bot Chord Forces Per Ply (lbs)

Chords	Tens.	Comp.	Chords	Tens.	Comp.
F - E	937	- 223	E - D	937	- 223

Maximum Web Forces Per Ply (lbs)

Webs	Tens.	Comp.	Webs	Tens.	Comp.
A - F	20	- 32	B - D	401	- 1682
F - B	401	- 1682	C - D	20	- 32
B - E	2707	- 604			

Lumber
Top chord: 2x4 SP #2;
Bot chord: 2x6 SP M-26;
Webs: 2x4 SP #2; W1 2x6 SP #2;

Nailnote
Nail Schedule:0.128"x3", min. nails
Top Chord: 1 Row @12.00" o.c.
Bot Chord: 2 Rows @ 2.50" o.c. (Each Row)
Webs : 1 Row @ 4" o.c.
Repeat nailing as each layer is applied. Use equal spacing between rows and stagger nails in each row to avoid splitting.

Special Loads
------(Lumber Dur.Fac.=1.25 / Plate Dur.Fac.=1.25)
TC: From 45 plf at 0.00 to 45 plf at 10.00
BC: From 10 plf at 0.46 to 10 plf at 9.54
BC: 1446 lb Conc. Load at 0.81, 2.81, 4.81, 6.81 8.81
BC: 1184 lb Conc. Load at 1.19, 3.19, 5.19, 7.19 9.19

Purlins
The TC of this truss shall be braced with attached spans at 24" oc in lieu of structural sheathing.

Wind
Wind loads and reactions based on MWFRS.
End verticals not exposed to wind pressure.

Additional Notes
Truss must be installed as shown with top chord up.

****WARNING**** READ AND FOLLOW ALL NOTES ON THIS DRAWING!
****IMPORTANT**** FURNISH THIS DRAWING TO ALL CONTRACTORS INCLUDING THE INSTALLERS
Trusses require extreme care in fabricating, handling, shipping, installing and bracing. Refer to and follow the latest edition of BCSI (Building Component Safety Information, by TPI and SBCA) for safety practices prior to performing these functions. Installers shall provide temporary bracing per BCSI. Unless noted otherwise, top chord shall have properly attached structural sheathing and bottom chord shall have a properly attached rigid ceiling. Locations shown for permanent lateral restraint of webs shall have continuous lateral restraint (CLR), installed with diagonal bracing installed on the CLR per BCSI sections B3, B7, or B10, as applicable. Apply plates to each face of truss and position as shown above and on the Joint Details, unless noted otherwise. Refer to drawings 160A-Z for standard plate positions. Refer to job's General Notes page for additional information.
Alpine, a division of ITW Building Components Group Inc. shall not be responsible for any deviation from this drawing, any failure to build the truss in conformance with ANSI/TPI 1, or for handling, shipping, installation and bracing of trusses. A seal on this drawing or cover page listing this drawing, indicates acceptance of professional engineering responsibility solely for the design shown. The suitability and use of this drawing for any structure is the responsibility of the Building Designer per ANSI/TPI 1 Sec.2.
For more information see these web sites: Alpine: alpineitw.com; TPI: tpinst.org; SBCA: sbcacomponents.com; ICC: iccsafe.org; AWC: awc.org

SEQN: 139621 / T72 / COMN FROM:	Ply: 3 Qty: 1 Wgt: 142.8 lbs	**Job Number:** 24070306 7725 RES. **Truss Label:** 9MH21G	DRW: ... / ... 07/24/2024

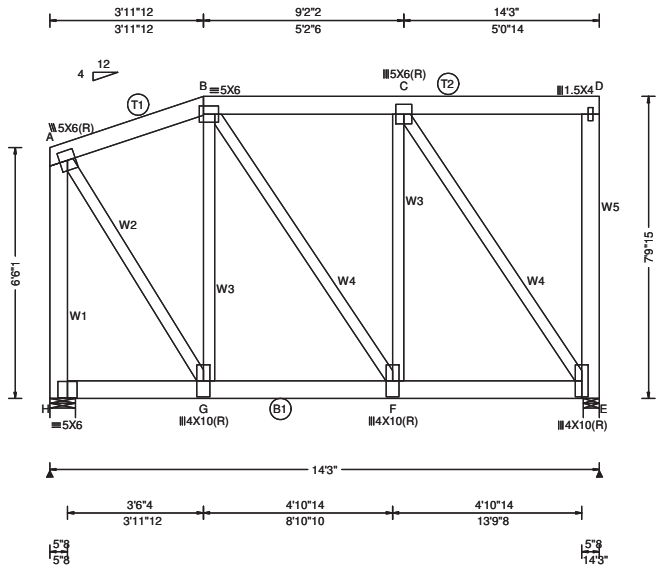

Loading Criteria (psf)

TCLL: 30.00
TCDL: 15.00
BCLL: 0.00
BCDL: 10.00
Des Ld: 55.00
NCBCLL: 0.00
Soffit: 2.00
Load Duration: 1.25
Spacing: 24.0 "

Wind Criteria

Wind Std: ASCE 7-22
Speed: 175 mph
Enclosure: Closed
Risk Category: II
EXP: C Kzt: NA
Mean Height: 19.17 ft
TCDL: 6.0 psf
BCDL: 6.0 psf
MWFRS Parallel Dist: 0 to h/2
C&C Dist a: 3.00 ft
Loc. from endwall: not in 9.00 ft
GCpi: 0.18
Wind Duration: 1.60

Snow Criteria (Pg,Pf in PSF)

Pg: NA Ct: NA CAT: NA
Pf: NA Ce: NA
Lu: NA Cs: NA
Snow Duration: NA

Building Code:
FBC 8th Ed. 2023 Res. HVHZ
TPI Std: 2014
Rep Fac: Yes
FT/RT:20(0)/10(0)
Plate Type(s):
WAVE

Defl/CSI Criteria

PP Deflection in	loc	L/defl	L/#
VERT(LL): 0.043	F	999	360
VERT(CL): 0.079	F	999	240
HORZ(LL): 0.010	B	-	-
HORZ(TL): 0.019	B	-	-

Creep Factor: 2.0
Max TC CSI: 0.072
Max BC CSI: 0.514
Max Web CSI: 0.740
Mfg Specified Camber:

VIEW Ver: 23.02.01A.1204.18

▲ Maximum Reactions (lbs)

Loc	Gravity R+	Gravity / R-	Gravity / Rh	Non-Gravity / Rw	Non-Gravity / U	Non-Gravity / RL
H	9268	/-	/-	/-	/2364	/-
E	10612	/-	/-	/-	/2453	/-

Wind reactions based on MWFRS
H Brg Wid = 8.0 Min Req = 1.5 (Support)
E Brg Wid = 5.0 Min Req = 1.5 (Support)
Bearings H & E are a rigid surface.

Maximum Top Chord Forces Per Ply (lbs)

Chords	Tens.	Comp.	Chords	Tens.	Comp.
A - B	366	- 1482	C - D	0	0
B - C	396	- 1705			

Maximum Bot Chord Forces Per Ply (lbs)

Chords	Tens.	Comp.	Chords	Tens.	Comp.
H - G	0	0	F - E	1615	- 377
G - F	1395	- 342			

Maximum Web Forces Per Ply (lbs)

Webs	Tens.	Comp.	Webs	Tens.	Comp.
A - H	651	- 2617	F - C	2265	- 490
A - G	2533	- 621	C - E	665	- 2849
B - G	12	- 57	D - E	21	- 36
B - F	559	- 98			

Lumber

Top chord: 2x6 SP #2;
Bot chord: 2x6 SP M-26;
Webs: 2x4 SP #2; W1,W5 2x6 SP #2;

Nailnote

Nail Schedule:0.128"x3", min. nails
Top Chord: 1 Row @12.00" o.c.
Bot Chord: 2 Rows @ 2.50" o.c. (Each Row)
Webs : 1 Row @ 4" o.c.
Repeat nailing as each layer is applied. Use equal spacing between rows and stagger nails in each row to avoid splitting.

Special Loads

------(Lumber Dur.Fac.=1.25 / Plate Dur.Fac.=1.25)
TC: From 45 plf at 0.00 to 45 plf at 14.25
BC: From 10 plf at 0.46 to 10 plf at 13.79
TC: 1268 lb Conc. Load at 14.06
BC: 1396 lb Conc. Load at 1.06, 5.06
BC: 1198 lb Conc. Load at 2.06
BC: 1409 lb Conc. Load at 3.06
BC: 1263 lb Conc. Load at 4.06, 6.06, 8.06,10.06 12.06
BC: 1531 lb Conc. Load at 7.06, 9.06,11.06,13.06

Wind

Wind loads and reactions based on MWFRS.

End verticals not exposed to wind pressure.

Wind loading based on both gable and hip roof types.

****WARNING**** READ AND FOLLOW ALL NOTES ON THIS DRAWING!
****IMPORTANT**** FURNISH THIS DRAWING TO ALL CONTRACTORS INCLUDING THE INSTALLERS
Trusses require extreme care in fabricating, handling, shipping, installing and bracing. Refer to and follow the latest edition of BCSI (Building Component Safety Information, by TPI and SBCA) for safety practices prior to performing these functions. Installers shall provide temporary bracing per BCSI. Unless noted otherwise, top chord shall have properly attached structural sheathing and bottom chord shall have a properly attached rigid ceiling. Locations shown for permanent lateral restraint of webs shall have continuous lateral restraint (CLR), installed with diagonal bracing installed on the CLR per BCSI sections B3, B7, or B10, as applicable. Apply plates to each face of truss and position as shown above and on the Joint Details, unless noted otherwise. Refer to drawings 160A-Z for standard plate positions. Refer to job's General Notes page for additional information.
Alpine, a division of ITW Building Components Group Inc. shall not be responsible for any deviation from this drawing, any failure to build the truss in conformance with ANSI/TPI 1, or for handling, shipping, installation and bracing of trusses. A seal on this drawing or cover page listing this drawing, indicates acceptance of professional engineering responsibility solely for the design shown. The suitability and use of this drawing for any structure is the responsibility of the Building Designer per ANSI/TPI 1 Sec.2.
For more information see these web sites: Alpine: alpineitw.com; TPI: tpinst.org; SBCA: sbcacomponents.com; ICC: iccsafe.org; AWC: awc.org

SEQN: 139627 / T60 / COMN FROM:	Ply: 3 Qty: 1 Wgt: 135.8 lbs	**Job Number:** 24070306 7725 RES. **Truss Label:** 9MH21AG	DRW: ... / ... 07/24/2024

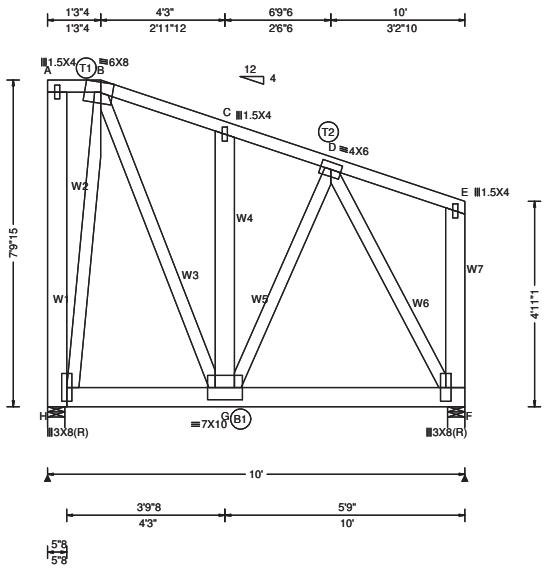

Loading Criteria (psf)

TCLL: 30.00
TCDL: 15.00
BCLL: 0.00
BCDL: 10.00
Des Ld: 55.00
NCBCLL: 0.00
Soffit: 2.00
Load Duration: 1.25
Spacing: 24.0 "

Wind Criteria

Wind Std: ASCE 7-22
Speed: 175 mph
Enclosure: Closed
Risk Category: II
EXP: C Kzt: NA
Mean Height: 18.38 ft
TCDL: 6.0 psf
BCDL: 6.0 psf
MWFRS Parallel Dist: 0 to h/2
C&C Dist a: 3.00 ft
Loc. from endwall: not in 9.00 ft
GCpi: 0.18
Wind Duration: 1.60

Snow Criteria (Pg,Pf in PSF)

Pg: NA Ct: NA CAT: NA
Pf: NA Ce: NA
Lu: NA Cs: NA
Snow Duration: NA

Building Code:
FBC 8th Ed. 2023 Res. HVHZ
TPI Std: 2014
Rep Fac: Yes
FT/RT:20(0)/10(0)
Plate Type(s):
WAVE

Defl/CSI Criteria

PP Deflection in	loc	L/defl	L/#
VERT(LL): 0.028	G	999	360
VERT(CL): 0.051	G	999	240
HORZ(LL): -0.011	C	-	-
HORZ(TL): 0.020	C	-	-

Creep Factor: 2.0
Max TC CSI: 0.098
Max BC CSI: 0.516
Max Web CSI: 0.504
Mfg Specified Camber:

VIEW Ver: 23.02.01A.1204.18

▲ Maximum Reactions (lbs)

Loc	Gravity R+	Gravity / R-	Gravity / Rh	Non-Gravity / Rw	Non-Gravity / U	Non-Gravity / RL
H	6590	/-	/-	/-	/1823	/-
F	6231	/-	/-	/-	/1716	/-

Wind reactions based on MWFRS
H Brg Wid = 5.0 Min Req = 1.5 (Support)
F Brg Wid = 5.0 Min Req = 1.7 (Truss)
Bearings H & F are a rigid surface.

Maximum Top Chord Forces Per Ply (lbs)

Chords	Tens.	Comp.	Chords	Tens.	Comp.
A - B	0	0	C - D	337	- 1198
B - C	336	- 1192	D - E	9	- 6

Maximum Bot Chord Forces Per Ply (lbs)

Chords	Tens.	Comp.	Chords	Tens.	Comp.
H - G	298	- 85	G - F	733	- 209

Maximum Web Forces Per Ply (lbs)

Webs	Tens.	Comp.	Webs	Tens.	Comp.
A - H	12	- 19	G - D	940	- 252
H - B	504	- 1771	D - F	424	- 1486
B - G	2232	- 619	E - F	13	- 19
G - C	22	- 19			

Lumber

Top chord: 2x4 SP #2;
Bot chord: 2x6 SP M-26;
Webs: 2x4 SP #2; W1,W4,W7 2x6 SP #2;

Nailnote

Nail Schedule:0.128"x3", min. nails
Top Chord: 1 Row @12.00" o.c.
Bot Chord: 2 Rows @ 2.50" o.c. (Each Row)
Webs : 1 Row @ 4" o.c.
Repeat nailing as each layer is applied. Use equal spacing between rows and stagger nails in each row to avoid splitting.

Special Loads

------(Lumber Dur.Fac.=1.25 / Plate Dur.Fac.=1.25)
TC: From 90 plf at 0.00 to 90 plf at 1.27
TC: From 45 plf at 1.27 to 45 plf at 10.00
BC: From 10 plf at 0.46 to 10 plf at 10.00
BC: 1263 lb Conc. Load at 0.81
BC: 1380 lb Conc. Load at 2.19
BC: 1202 lb Conc. Load at 2.81
BC: 1383 lb Conc. Load at 4.19, 6.19, 8.19
BC: 1488 lb Conc. Load at 4.31
BC: 1369 lb Conc. Load at 6.31
BC: 1367 lb Conc. Load at 8.31

Wind

Wind loads and reactions based on MWFRS.

End verticals not exposed to wind pressure.

Wind loading based on both gable and hip roof types.

****WARNING**** READ AND FOLLOW ALL NOTES ON THIS DRAWING!
****IMPORTANT**** FURNISH THIS DRAWING TO ALL CONTRACTORS INCLUDING THE INSTALLERS

Trusses require extreme care in fabricating, handling, shipping, installing and bracing. Refer to and follow the latest edition of BCSI (Building Component Safety Information, by TPI and SBCA) for safety practices prior to performing these functions. Installers shall provide temporary bracing per BCSI. Unless noted otherwise, top chord shall have properly attached structural sheathing and bottom chord shall have a properly attached rigid ceiling. Locations shown for permanent lateral restraint of webs shall have continuous lateral restraint (CLR), installed with diagonal bracing installed on the CLR per BCSI sections B3, B7, or B10, as applicable. Apply plates to each face of truss and position as shown above and on the Joint Details, unless noted otherwise. Refer to drawings 160A-Z for standard plate positions. Refer to job's General Notes page for additional information.

Alpine, a division of ITW Building Components Group Inc. shall not be responsible for any deviation from this drawing, any failure to build the truss in conformance with ANSI/TPI 1, or for handling, shipping, installation and bracing of trusses. A seal on this drawing or cover page listing this drawing, indicates acceptance of professional engineering responsibility solely for the design shown. The suitability and use of this drawing for any structure is the responsibility of the Building Designer per ANSI/TPI 1 Sec.2.

For more information see these web sites: Alpine: alpineitw.com; TPI: tpinst.org; SBCA: sbcacomponents.com; ICC: iccsafe.org; AWC: awc.org

SEQN: 139630 / T3 / MONO FROM:	Ply: 3 Qty: 1 Wgt: 93.8 lbs	**Job Number:** 24070306 7725 RES. **Truss Label:** 9MG	DRW: ... / ... 07/24/2024

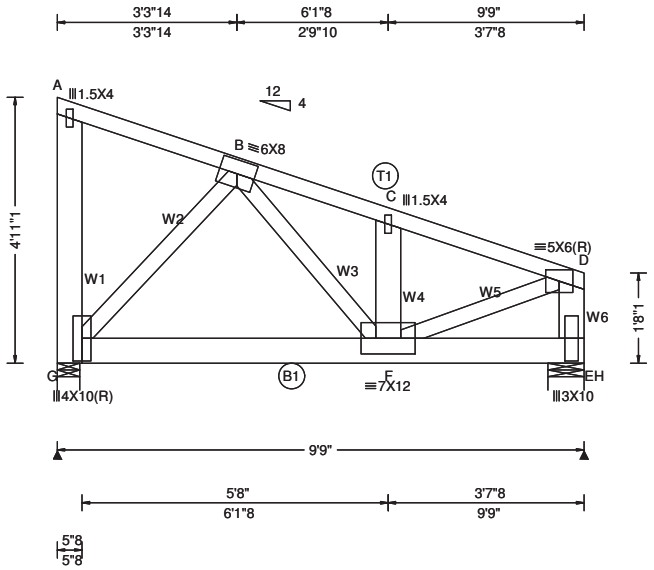

Loading Criteria (psf)

TCLL: 30.00
TCDL: 15.00
BCLL: 0.00
BCDL: 10.00
Des Ld: 55.00
NCBCLL: 0.00
Soffit: 2.00
Load Duration: 1.25
Spacing: 24.0 "

Wind Criteria

Wind Std: ASCE 7-22
Speed: 175 mph
Enclosure: Closed
Risk Category: II
EXP: C Kzt: NA
Mean Height: 15.30 ft
TCDL: 6.0 psf
BCDL: 6.0 psf
MWFRS Parallel Dist: 0 to h/2
C&C Dist a: 3.00 ft
Loc. from endwall: not in 9.00 ft
GCpi: 0.18
Wind Duration: 1.60

Snow Criteria (Pg,Pf in PSF)

Pg: NA Ct: NA CAT: NA
Pf: NA Ce: NA
Lu: NA Cs: NA
Snow Duration: NA

Building Code:
FBC 8th Ed. 2023 Res. HVHZ
TPI Std: 2014
Rep Fac: Yes
FT/RT:20(0)/10(0)
Plate Type(s):
WAVE

Defl/CSI Criteria

PP Deflection in	loc	L/defl	L/#
VERT(LL): 0.040	F	999	360
VERT(CL): 0.073	F	999	240
HORZ(LL): 0.018	A	-	-
HORZ(TL): 0.033	A	-	-

Creep Factor: 2.0
Max TC CSI: 0.277
Max BC CSI: 0.651
Max Web CSI: 0.640
Mfg Specified Camber:

VIEW Ver: 23.02.01A.1204.18

▲ Maximum Reactions (lbs)

Loc	Gravity R+	Gravity / R-	/ Rh	Non-Gravity / Rw	Non-Gravity / U	Non-Gravity / RL
G	7999	/-	/-	/-	/2941	/-
H	5758	/-	/-	/-	/2753	/-

Wind reactions based on MWFRS
G Brg Wid = 5.0 Min Req = 1.5 (Support)
H Brg Wid = 8.0 Min Req = 1.6 (Truss)
Bearings G & H are a rigid surface.

Maximum Top Chord Forces Per Ply (lbs)

Chords	Tens.	Comp.	Chords	Tens.	Comp.
A - B	6	- 11	C - D	1381	- 2888
B - C	1368	- 2861			

Maximum Bot Chord Forces Per Ply (lbs)

Chords	Tens.	Comp.	Chords	Tens.	Comp.
G - F	1129	- 541	F - E	45	- 24

Maximum Web Forces Per Ply (lbs)

Webs	Tens.	Comp.	Webs	Tens.	Comp.
A - G	9	- 16	F - C	19	- 24
G - B	770	- 1608	F - D	2835	- 1352
B - F	2527	- 1205	D - E	926	- 1932

Lumber

Top chord: 2x4 SP #2;
Bot chord: 2x6 SP M-26;
Webs: 2x6 SP #2; W2,W3,W5 2x4 SP #2;

Nailnote

Nail Schedule:0.128"x3", min. nails
Top Chord: 1 Row @ 7.50" o.c.
Bot Chord: 2 Rows @ 2.50" o.c. (Each Row)
Webs : 1 Row @ 4" o.c.
Repeat nailing as each layer is applied. Use equal spacing between rows and stagger nails in each row to avoid splitting.

Special Loads

------(Lumber Dur.Fac.=1.25 / Plate Dur.Fac.=1.25)

TC: From	45 plf at	0.00 to	45 plf at	6.13	
TC: From	90 plf at	6.13 to	90 plf at	9.75	
BC: From	10 plf at	0.46 to	10 plf at	9.75	

TC: 1411 lb Conc. Load at 0.19
BC: 1382 lb Conc. Load at 0.50
BC: 1409 lb Conc. Load at 2.19, 4.19
BC: 1367 lb Conc. Load at 2.69
BC: 1369 lb Conc. Load at 4.69
BC: 2026 lb Conc. Load at 6.13
BC: 1488 lb Conc. Load at 6.69
BC: 1202 lb Conc. Load at 8.19

Wind

Wind loads and reactions based on MWFRS.

End verticals not exposed to wind pressure.

Wind loading based on both gable and hip roof types.

****WARNING**** READ AND FOLLOW ALL NOTES ON THIS DRAWING!
****IMPORTANT**** FURNISH THIS DRAWING TO ALL CONTRACTORS INCLUDING THE INSTALLERS
Trusses require extreme care in fabricating, handling, shipping, installing and bracing. Refer to and follow the latest edition of BCSI (Building Component Safety Information, by TPI and SBCA) for safety practices prior to performing these functions. Installers shall provide temporary bracing per BCSI. Unless noted otherwise, top chord shall have properly attached structural sheathing and bottom chord shall have a properly attached rigid ceiling. Locations shown for permanent lateral restraint of webs shall have continuous lateral restraint (CLR), installed with diagonal bracing installed on the CLR per BCSI sections B3, B7, or B10, as applicable. Apply plates to each face of truss and position as shown above and on the Joint Details, unless noted otherwise. Refer to drawings 160A-Z for standard plate positions. Refer to job's General Notes page for additional information.
Alpine, a division of ITW Building Components Group Inc. shall not be responsible for any deviation from this drawing, any failure to build the truss in conformance with ANSI/TPI 1, or for handling, shipping, installation and bracing of trusses. A seal on this drawing or cover page listing this drawing, indicates acceptance of professional engineering responsibility solely for the design shown. The suitability and use of this drawing for any structure is the responsibility of the Building Designer per ANSI/TPI 1 Sec.2.
For more information see these web sites: Alpine: alpineitw.com; TPI: tpinst.org; SBCA: sbcacomponents.com; ICC: iccsafe.org; AWC: awc.org

SEQN: 139633 / T86 / MONO FROM:	Ply: 1 Qty: 2 Wgt: 37.1 lbs	**Job Number:** 24070306 7725 RES. **Truss Label:** 10MG	DRW: ... / ... 07/24/2024

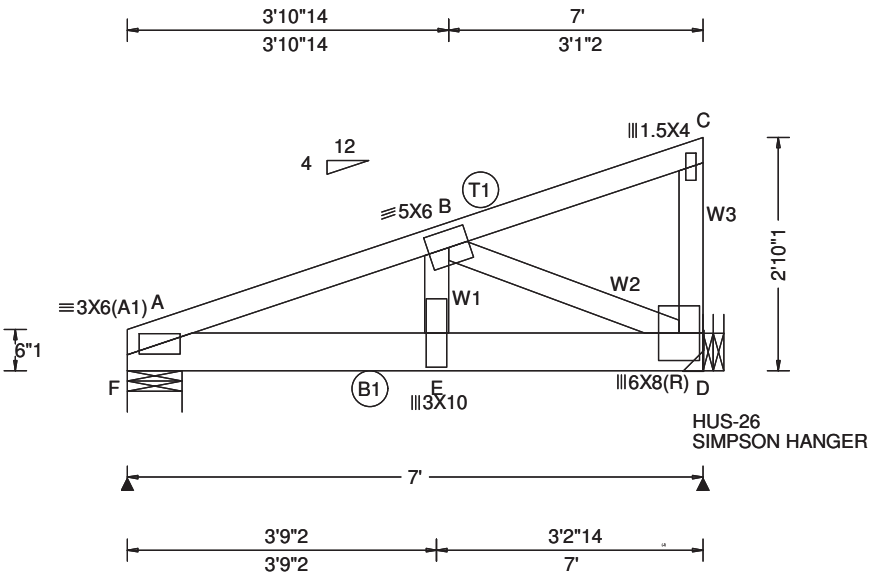

Loading Criteria (psf)

TCLL:	30.00
TCDL:	15.00
BCLL:	0.00
BCDL:	10.00
Des Ld:	55.00
NCBCLL:	10.00
Soffit:	2.00

Load Duration: 1.25
Spacing: 24.0 "

Wind Criteria
Wind Std: ASCE 7-22
Speed: 175 mph
Enclosure: Closed
Risk Category: II
EXP: C Kzt: NA
Mean Height: 22.17 ft
TCDL: 6.0 psf
BCDL: 6.0 psf
MWFRS Parallel Dist: 0 to h/2
C&C Dist a: 3.00 ft
Loc. from endwall: not in 9.00 ft
GCpi: 0.18
Wind Duration: 1.60

Snow Criteria (Pg,Pf in PSF)
Pg: NA Ct: NA CAT: NA
Pf: NA Ce: NA
Lu: NA Cs: NA
Snow Duration: NA

Building Code:
FBC 8th Ed. 2023 Res. HVHZ
TPI Std: 2014
Rep Fac: Varies by Ld Case
FT/RT:20(0)/10(0)
Plate Type(s):
WAVE

Defl/CSI Criteria

PP Deflection in	loc	L/defl	L/#
VERT(LL): 0.036	E	999	360
VERT(CL): 0.065	E	999	240
HORZ(LL): -0.009	C	-	-
HORZ(TL): 0.016	C	-	-

Creep Factor: 2.0
Max TC CSI: 0.432
Max BC CSI: 0.992
Max Web CSI: 0.569
Mfg Specified Camber:

VIEW Ver: 23.02.01A.1204.18

▲ Maximum Reactions (lbs)

Loc	Gravity R+	Gravity / R-	Gravity / Rh	Non-Gravity / Rw	Non-Gravity / U	Non-Gravity / RL
F	2016	/-	/-	/-	/805	/-
D	1571	/-	/-	/-	/645	/-

Wind reactions based on MWFRS
F Brg Wid = 8.0 Min Req = 2.4 (Truss)
D Brg Wid = - Min Req = -
Bearing F is a rigid surface.

Maximum Top Chord Forces Per Ply (lbs)

Chords	Tens.	Comp.	Chords	Tens.	Comp.
A - B	1159	- 2879	B - C	44	- 62

Maximum Bot Chord Forces Per Ply (lbs)

Chords	Tens.	Comp.	Chords	Tens.	Comp.
A - E	2700	- 1074	E - D	2579	- 1034

Maximum Web Forces Per Ply (lbs)

Webs	Tens.	Comp.	Webs	Tens.	Comp.
E - B	1715	- 571	C - D	87	- 121
B - D	1127	- 2814			

Lumber
Top chord: 2x4 SP #2;
Bot chord: 2x6 SP #2;
Webs: 2x4 SP #2;

Special Loads
------(Lumber Dur.Fac.=1.25 / Plate Dur.Fac.=1.25)
TC: From 90 plf at 0.00 to 90 plf at 7.00
BC: From 10 plf at 0.00 to 10 plf at 7.00
BC: 962 lb Conc. Load at 1.06, 3.06, 5.06

Hangers / Ties
(J) Hanger Support Required, by others

Wind
Wind loads and reactions based on MWFRS.
Right end vertical not exposed to wind pressure.
Wind loading based on both gable and hip roof types.

****WARNING**** READ AND FOLLOW ALL NOTES ON THIS DRAWING!
****IMPORTANT**** FURNISH THIS DRAWING TO ALL CONTRACTORS INCLUDING THE INSTALLERS
Trusses require extreme care in fabricating, handling, shipping, installing and bracing. Refer to and follow the latest edition of BCSI (Building Component Safety Information, by TPI and SBCA) for safety practices prior to performing these functions. Installers shall provide temporary bracing per BCSI. Unless noted otherwise, top chord shall have properly attached structural sheathing and bottom chord shall have a properly attached rigid ceiling. Locations shown for permanent lateral restraint of webs shall have continuous lateral restraint (CLR), installed with diagonal bracing installed on the CLR per BCSI sections B3, B7, or B10, as applicable. Apply plates to each face of truss and position as shown above and on the Joint Details, unless noted otherwise. Refer to drawings 160A-Z for standard plate positions. Refer to job's General Notes page for additional information.
Alpine, a division of ITW Building Components Group Inc. shall not be responsible for any deviation from this drawing, any failure to build the truss in conformance with ANSI/TPI 1, or for handling, shipping, installation and bracing of trusses. A seal on this drawing or cover page listing this drawing, indicates acceptance of professional engineering responsibility solely for the design shown. The suitability and use of this drawing for any structure is the responsibility of the Building Designer per ANSI/TPI 1 Sec.2.
For more information see these web sites: Alpine: alpineitw.com; TPI: tpinst.org; SBCA: sbcacomponents.com; ICC: iccsafe.org; AWC: awc.org

SEQN: 139639 / T34 / HIPM FROM:	Ply: 1 Qty: 1 Wgt: 61.6 lbs	**Job Number:** 24070306 7725 RES. **Truss Label:** 11MH5G	DRW: ... / ... 07/24/2024

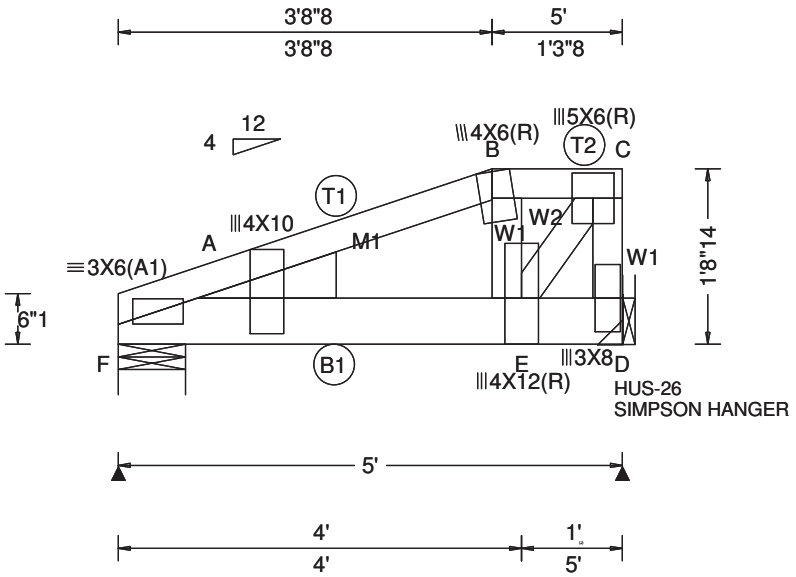

Loading Criteria (psf)

TCLL:	30.00
TCDL:	15.00
BCLL:	0.00
BCDL:	10.00
Des Ld:	55.00
NCBCLL:	10.00
Soffit:	2.00

Load Duration: 1.25
Spacing: 24.0 "

Wind Criteria
Wind Std: ASCE 7-22
Speed: 175 mph
Enclosure: Closed
Risk Category: II
EXP: C Kzt: NA
Mean Height: 15.00 ft
TCDL: 6.0 psf
BCDL: 6.0 psf
MWFRS Parallel Dist: 0 to h/2
C&C Dist a: 3.00 ft
Loc. from endwall: not in 9.00 ft
GCpi: 0.18
Wind Duration: 1.60

Snow Criteria (Pg,Pf in PSF)
Pg: NA Ct: NA CAT: NA
Pf: NA Ce: NA
Lu: NA Cs: NA
Snow Duration: NA

Building Code:
FBC 8th Ed. 2023 Res. HVHZ
TPI Std: 2014
Rep Fac: Varies by Ld Case
FT/RT:20(0)/10(0)
Plate Type(s):
WAVE

Defl/CSI Criteria

PP Deflection in	loc	L/defl	L/#
VERT(LL): 0.041	A	999	360
VERT(CL): 0.074	A	782	240
HORZ(LL): 0.012	A	-	-
HORZ(TL): 0.022	A	-	-

Creep Factor: 2.0
Max TC CSI: 0.464
Max BC CSI: 0.442
Max Web CSI: 0.541
Mfg Specified Camber:

VIEW Ver: 23.02.01A.1204.18

▲ Maximum Reactions (lbs)

Loc	Gravity R+	Gravity / R-	Gravity / Rh	Non-Gravity / Rw	Non-Gravity / U	Non-Gravity / RL
F	1831	/-	/-	/-	/405	/-
D	1427	/-	/-	/-	/360	/-

Wind reactions based on MWFRS
F Brg Wid = 8.0 Min Req = 1.5 (Truss)
D Brg Wid = - Min Req = -
Bearing F is a rigid surface.

Maximum Top Chord Forces Per Ply (lbs)

Chords	Tens.	Comp.	Chords	Tens.	Comp.
A - B	364	- 1493	B - C	320	- 1423

Maximum Bot Chord Forces Per Ply (lbs)

Chords	Tens.	Comp.	Chords	Tens.	Comp.
A - E	1444	- 342	E - D	8	- 2

Maximum Web Forces Per Ply (lbs)

Webs	Tens.	Comp.	Webs	Tens.	Comp.
B - E	103	- 104	C - D	449	- 1915
E - C	2394	- 538			

Lumber
Top chord: 2x4 SP #2;
Bot chord: 2x6 SP M-26;
Webs: 2x4 SP #2;
Lt Wedge: 2x6 SP #2;

Special Loads
------(Lumber Dur.Fac.=1.25 / Plate Dur.Fac.=1.25)
TC: From 90 plf at 0.00 to 90 plf at 5.00
BC: From 10 plf at 0.00 to 10 plf at 5.00
TC: 208 lb Conc. Load at 3.66
BC: 1235 lb Conc. Load at 1.06, 3.06
BC: 82 lb Conc. Load at 3.66

Wind
Wind loads and reactions based on MWFRS.
Right end vertical not exposed to wind pressure.
Wind loading based on both gable and hip roof types.

****WARNING**** READ AND FOLLOW ALL NOTES ON THIS DRAWING!
****IMPORTANT**** FURNISH THIS DRAWING TO ALL CONTRACTORS INCLUDING THE INSTALLERS
Trusses require extreme care in fabricating, handling, shipping, installing and bracing. Refer to and follow the latest edition of BCSI (Building Component Safety Information, by TPI and SBCA) for safety practices prior to performing these functions. Installers shall provide temporary bracing per BCSI. Unless noted otherwise, top chord shall have properly attached structural sheathing and bottom chord shall have a properly attached rigid ceiling. Locations shown for permanent lateral restraint of webs shall have continuous lateral restraint (CLR), installed with diagonal bracing installed on the CLR per BCSI sections B3, B7, or B10, as applicable. Apply plates to each face of truss and position as shown above and on the Joint Details, unless noted otherwise. Refer to drawings 160A-Z for standard plate positions. Refer to job's General Notes page for additional information.
Alpine, a division of ITW Building Components Group Inc. shall not be responsible for any deviation from this drawing, any failure to build the truss in conformance with ANSI/TPI 1, or for handling, shipping, installation and bracing of trusses. A seal on this drawing or cover page listing this drawing, indicates acceptance of professional engineering responsibility solely for the design shown. The suitability and use of this drawing for any structure is the responsibility of the Building Designer per ANSI/TPI 1 Sec.2.
For more information see these web sites: Alpine: alpineitw.com; TPI: tpinst.org; SBCA: sbcacomponents.com; ICC: iccsafe.org; AWC: awc.org

SEQN: 139516 / T105 / MONO FROM:	Ply: 1 Qty: 2 Wgt: 14.7 lbs	**Job Number:** 24070306 7725 RES. **Truss Label:** 12M3G	DRW: ... / ... 07/24/2024

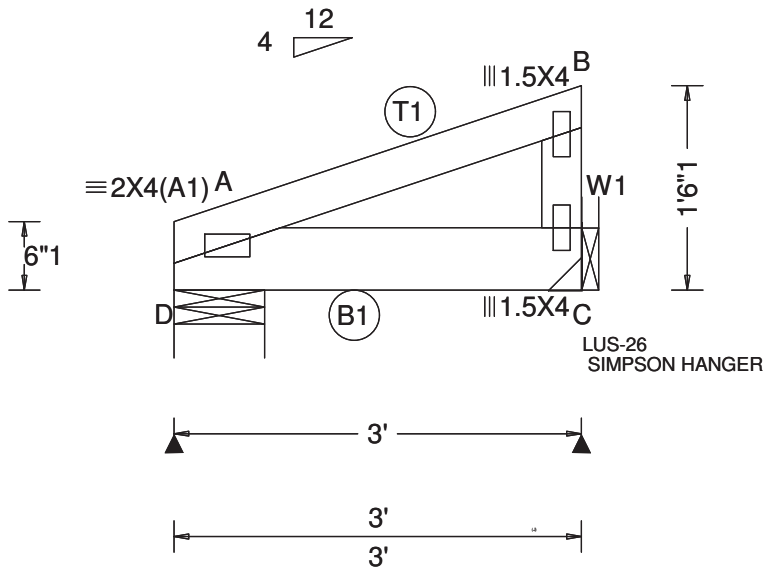

Loading Criteria (psf)

TCLL:	30.00
TCDL:	15.00
BCLL:	0.00
BCDL:	10.00
Des Ld:	55.00
NCBCLL:	10.00
Soffit:	2.00

Load Duration: 1.25
Spacing: 24.0 "

Wind Criteria
Wind Std: ASCE 7-22
Speed: 175 mph
Enclosure: Closed
Risk Category: II
EXP: C Kzt: NA
Mean Height: 15.00 ft
TCDL: 6.0 psf
BCDL: 6.0 psf
MWFRS Parallel Dist: 0 to h/2
C&C Dist a: 3.00 ft
Loc. from endwall: not in 4.50 ft
GCpi: 0.18
Wind Duration: 1.60

Snow Criteria (Pg,Pf in PSF)
Pg: NA Ct: NA CAT: NA
Pf: NA Ce: NA
Lu: NA Cs: NA
Snow Duration: NA

Building Code:
FBC 8th Ed. 2023 Res. HVHZ
TPI Std: 2014
Rep Fac: Varies by Ld Case
FT/RT:20(0)/10(0)
Plate Type(s):
WAVE

Defl/CSI Criteria
PP Deflection in loc L/defl L/#
VERT(LL): NA
VERT(CL): NA
HORZ(LL): 0.006 A - -
HORZ(TL): 0.011 A - -
Creep Factor: 2.0
Max TC CSI: 0.405
Max BC CSI: 0.861
Max Web CSI: 0.044
Mfg Specified Camber:

VIEW Ver: 23.02.01A.1204.18

▲ Maximum Reactions (lbs)

	Gravity			Non-Gravity		
Loc	R+	/ R-	/ Rh	/ Rw	/ U	/ RL
D	798	/-	/-	/-	/152	/-
C	772	/-	/-	/-	/145	/-

Wind reactions based on MWFRS
D Brg Wid = 8.0 Min Req = 1.5 (Truss)
C Brg Wid = - Min Req = -
Bearing D is a rigid surface.

Maximum Top Chord Forces Per Ply (lbs)

Chords	Tens.	Comp.
A - B	22	- 45

Maximum Bot Chord Forces Per Ply (lbs)

Chords	Tens.	Comp.
A - C	33	- 7

Maximum Web Forces Per Ply (lbs)

Webs	Tens.	Comp.
B - C	62	- 159

Lumber
Top chord: 2x4 SP #2;
Bot chord: 2x6 SP #2;
Webs: 2x4 SP #2;

Special Loads
------(Lumber Dur.Fac.=1.25 / Plate Dur.Fac.=1.25)
TC: From 90 plf at 0.00 to 90 plf at 3.00
BC: From 20 plf at 0.00 to 20 plf at 3.00
BC: 1240 lb Conc. Load at 1.56

Wind
Wind loads and reactions based on MWFRS.
Right end vertical not exposed to wind pressure.
Wind loading based on both gable and hip roof types.

****WARNING**** READ AND FOLLOW ALL NOTES ON THIS DRAWING!
****IMPORTANT**** FURNISH THIS DRAWING TO ALL CONTRACTORS INCLUDING THE INSTALLERS
Trusses require extreme care in fabricating, handling, shipping, installing and bracing. Refer to and follow the latest edition of BCSI (Building Component Safety Information, by TPI and SBCA) for safety practices prior to performing these functions. Installers shall provide temporary bracing per BCSI. Unless noted otherwise, top chord shall have properly attached structural sheathing and bottom chord shall have a properly attached rigid ceiling. Locations shown for permanent lateral restraint of webs shall have continuous lateral restraint (CLR), installed with diagonal bracing installed on the CLR per BCSI sections B3, B7, or B10, as applicable. Apply plates to each face of truss and position as shown above and on the Joint Details, unless noted otherwise. Refer to drawings 160A-Z for standard plate positions. Refer to job's General Notes page for additional information.
Alpine, a division of ITW Building Components Group Inc. shall not be responsible for any deviation from this drawing, any failure to build the truss in conformance with ANSI/TPI 1, or for handling, shipping, installation and bracing of trusses. A seal on this drawing or cover page listing this drawing, indicates acceptance of professional engineering responsibility solely for the design shown. The suitability and use of this drawing for any structure is the responsibility of the Building Designer per ANSI/TPI 1 Sec.2.
For more information see these web sites: Alpine: alpineitw.com; TPI: tpinst.org; SBCA: sbcacomponents.com; ICC: iccsafe.org; AWC: awc.org

SEQN: 204744 / T21 / MONO FROM:	Ply: 1 Qty: 2 Wgt: 14.7 lbs	**Job Number:** 24070306 7725 RES. **Truss Label:** 12M3AG	DRW: ... / ... 07/24/2024

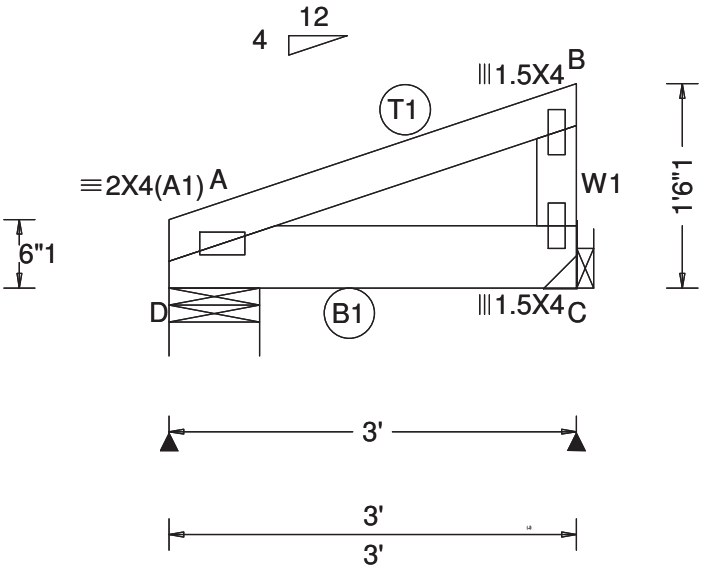

Loading Criteria (psf)

TCLL:	30.00
TCDL:	15.00
BCLL:	0.00
BCDL:	10.00
Des Ld:	55.00
NCBCLL:	10.00
Soffit:	2.00

Load Duration: 1.25
Spacing: 24.0 "

Wind Criteria
Wind Std: ASCE 7-22
Speed: 175 mph
Enclosure: Closed
Risk Category: II
EXP: C Kzt: NA
Mean Height: 15.00 ft
TCDL: 6.0 psf
BCDL: 6.0 psf
MWFRS Parallel Dist: 0 to h/2
C&C Dist a: 3.00 ft
Loc. from endwall: not in 4.50 ft
GCpi: 0.18
Wind Duration: 1.60

Snow Criteria (Pg,Pf in PSF)
Pg: NA Ct: NA CAT: NA
Pf: NA Ce: NA
Lu: NA Cs: NA
Snow Duration: NA

Building Code:
FBC 8th Ed. 2023 Res. HVHZ
TPI Std: 2014
Rep Fac: Varies by Ld Case
FT/RT:20(0)/10(0)
Plate Type(s):
WAVE

Defl/CSI Criteria
PP Deflection in loc L/defl L/#
VERT(LL): NA
VERT(CL): NA
HORZ(LL): 0.006 A - -
HORZ(TL): 0.011 A - -
Creep Factor: 2.0
Max TC CSI: 0.399
Max BC CSI: 0.846
Max Web CSI: 0.043
Mfg Specified Camber:

VIEW Ver: 23.02.01A.1204.18

▲ Maximum Reactions (lbs)

	Gravity			Non-Gravity		
Loc	R+	/ R-	/ Rh	/ Rw	/ U	/ RL
D	786	/-	/-	/-	/170	/-
C	760	/-	/-	/-	/162	/-

Wind reactions based on MWFRS
D Brg Wid = 8.0 Min Req = 1.5 (Truss)
C Brg Wid = - Min Req = -
Bearing D is a rigid surface.

Maximum Top Chord Forces Per Ply (lbs)

Chords	Tens.	Comp.
A - B	23	- 45

Maximum Bot Chord Forces Per Ply (lbs)

Chords	Tens.	Comp.
A - C	32	- 7

Maximum Web Forces Per Ply (lbs)

Webs	Tens.	Comp.
B - C	64	- 158

Lumber
Top chord: 2x4 SP #2;
Bot chord: 2x6 SP #2;
Webs: 2x4 SP #2;

Special Loads
------(Lumber Dur.Fac.=1.25 / Plate Dur.Fac.=1.25)
TC: From 90 plf at 0.00 to 90 plf at 3.00
BC: From 20 plf at 0.00 to 20 plf at 3.00
BC: 1216 lb Conc. Load at 1.56

Wind
Wind loads and reactions based on MWFRS.
Right end vertical not exposed to wind pressure.
Wind loading based on both gable and hip roof types.

****WARNING**** READ AND FOLLOW ALL NOTES ON THIS DRAWING!
****IMPORTANT**** FURNISH THIS DRAWING TO ALL CONTRACTORS INCLUDING THE INSTALLERS
Trusses require extreme care in fabricating, handling, shipping, installing and bracing. Refer to and follow the latest edition of BCSI (Building Component Safety Information, by TPI and SBCA) for safety practices prior to performing these functions. Installers shall provide temporary bracing per BCSI. Unless noted otherwise, top chord shall have properly attached structural sheathing and bottom chord shall have a properly attached rigid ceiling. Locations shown for permanent lateral restraint of webs shall have continuous lateral restraint (CLR), installed with diagonal bracing installed on the CLR per BCSI sections B3, B7, or B10, as applicable. Apply plates to each face of truss and position as shown above and on the Joint Details, unless noted otherwise. Refer to drawings 160A-Z for standard plate positions. Refer to job's General Notes page for additional information.
Alpine, a division of ITW Building Components Group Inc. shall not be responsible for any deviation from this drawing, any failure to build the truss in conformance with ANSI/TPI 1, or for handling, shipping, installation and bracing of trusses. A seal on this drawing or cover page listing this drawing, indicates acceptance of professional engineering responsibility solely for the design shown. The suitability and use of this drawing for any structure is the responsibility of the Building Designer per ANSI/TPI 1 Sec.2.
For more information see these web sites: Alpine: alpineitw.com; TPI: tpinst.org; SBCA: sbcacomponents.com; ICC: iccsafe.org; AWC: awc.org

SEQN: 206605 / T8 / HIP_ FROM:	Ply: 1 Qty: 4 Wgt: 61.6 lbs	**Job Number:** 24070306 7725 RES. **Truss Label:** CJ7	DRW: ... / ... 07/24/2024

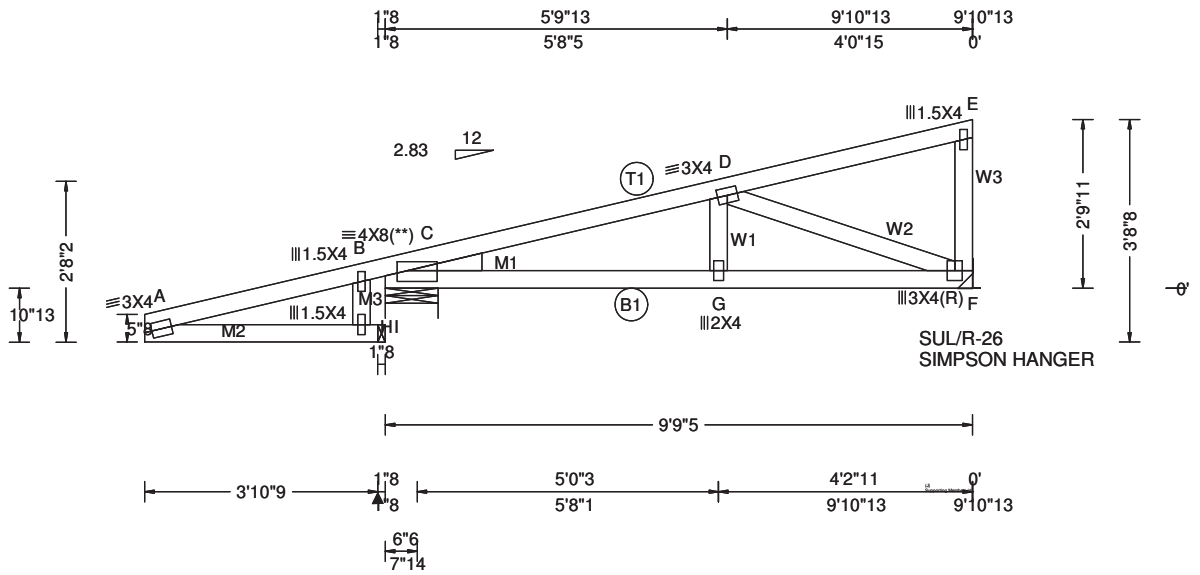

Loading Criteria (psf)

TCLL:	30.00
TCDL:	15.00
BCLL:	0.00
BCDL:	10.00
Des Ld:	55.00
NCBCLL:	10.00
Soffit:	2.00

Load Duration: 1.25
Spacing: 24.0 "

Wind Criteria
Wind Std: ASCE 7-22
Speed: 175 mph
Enclosure: Closed
Risk Category: II
EXP: C Kzt: NA
Mean Height: 21.68 ft
TCDL: 6.0 psf
BCDL: 6.0 psf
MWFRS Parallel Dist: 0 to h/2
C&C Dist a: 3.00 ft
Loc. from endwall: not in 4.50 ft
GCpi: 0.18
Wind Duration: 1.60

Snow Criteria (Pg,Pf in PSF)
Pg: NA Ct: NA CAT: NA
Pf: NA Ce: NA
Lu: NA Cs: NA
Snow Duration: NA

Building Code:
FBC 8th Ed. 2023 Res. HVHZ
TPI Std: 2014
Rep Fac: Varies by Ld Case
FT/RT:20(0)/10(0)
Plate Type(s):
WAVE

Defl/CSI Criteria

PP Deflection in	loc	L/defl	L/#
VERT(LL): 0.031	G	999	360
VERT(CL): 0.055	G	999	240
HORZ(LL): 0.008	F	-	-
HORZ(TL): 0.014	F	-	-

Creep Factor: 2.0
Max TC CSI: 0.232
Max BC CSI: 0.829
Max Web CSI: 0.322
Mfg Specified Camber:

VIEW Ver: 23.02.01A.1204.18

▲ Maximum Reactions (lbs)

	Gravity			Non-Gravity		
Loc	R+	/ R-	/ Rh	/ Rw	/ U	/ RL
I	-	/-	/229	/-	/-	/101
B	515	/-	/229	/-	/405	/101
F	505	/-	/-	/-	/199	/-

Wind reactions based on MWFRS
I Brg Wid = 1.5 Min Req = -
B Brg Wid = 10.6 Min Req = 1.5 (Truss)
F Brg Wid = - Min Req = -
Bearing B is a rigid surface.

Maximum Top Chord Forces Per Ply (lbs)

Chords	Tens.	Comp.	Chords	Tens.	Comp.
A - B	242	- 117	C - D	442	- 1020
B - C	269	- 128	D - E	6	- 22

Maximum Bot Chord Forces Per Ply (lbs)

Chords	Tens.	Comp.	Chords	Tens.	Comp.
C - G	986	- 431	G - F	942	- 413

Maximum Web Forces Per Ply (lbs)

Webs	Tens.	Comp.	Webs	Tens.	Comp.
A - H	98	- 217	G - D	611	- 255
B - H	24	- 4	D - F	436	- 991
H - I	101	- 229	E - F	0	- 50

Lumber
Top chord: 2x4 SP #2;
Bot chord: 2x4 SP #1;
Webs: 2x4 SP #2;
Lt Wedge: 2x4 SP #2;Lt Level Return: 2x4 SP #2;

Special Loads

------(Lumber Dur.Fac.=1.25 / Plate Dur.Fac.=1.25)
TC: From 1 plf at -4.07 to 90 plf at 0.00
TC: From 2 plf at 0.00 to 2 plf at 9.77
BC: From 2 plf at 0.00 to 2 plf at 9.77
PLB: From 4 plf at -3.97 to 4 plf at -0.17
TC: -27 lb Conc. Load at 1.41
TC: 191 lb Conc. Load at 4.24
TC: 349 lb Conc. Load at 7.07
BC: 7 lb Conc. Load at 1.41
BC: 91 lb Conc. Load at 4.24
BC: 166 lb Conc. Load at 7.07

Plating Notes
(**) 1 plate(s) require special positioning. Refer to scaled plate plot details for special positioning requirements.

Wind
Wind loads and reactions based on MWFRS.
Right end vertical not exposed to wind pressure.
Wind loading based on both gable and hip roof types.

Additional Notes
The maximum horizontal reaction is 229#
***** BEARING ANALOG MODIFIED! *****

****WARNING**** READ AND FOLLOW ALL NOTES ON THIS DRAWING!
****IMPORTANT**** FURNISH THIS DRAWING TO ALL CONTRACTORS INCLUDING THE INSTALLERS
Trusses require extreme care in fabricating, handling, shipping, installing and bracing. Refer to and follow the latest edition of BCSI (Building Component Safety Information, by TPI and SBCA) for safety practices prior to performing these functions. Installers shall provide temporary bracing per BCSI. Unless noted otherwise, top chord shall have properly attached structural sheathing and bottom chord shall have a properly attached rigid ceiling. Locations shown for permanent lateral restraint of webs shall have continuous lateral restraint (CLR), installed with diagonal bracing installed on the CLR per BCSI sections B3, B7, or B10, as applicable. Apply plates to each face of truss and position as shown above and on the Joint Details, unless noted otherwise. Refer to drawings 160A-Z for standard plate positions. Refer to job's General Notes page for additional information.
Alpine, a division of ITW Building Components Group Inc. shall not be responsible for any deviation from this drawing, any failure to build the truss in conformance with ANSI/TPI 1, or for handling, shipping, installation and bracing of trusses. A seal on this drawing or cover page listing this drawing, indicates acceptance of professional engineering responsibility solely for the design shown. The suitability and use of this drawing for any structure is the responsibility of the Building Designer per ANSI/TPI 1 Sec.2.
For more information see these web sites: Alpine: alpineitw.com; TPI: tpinst.org; SBCA: sbcacomponents.com; ICC: iccsafe.org; AWC: awc.org

SEQN: 139545 / T7 / HIP_ FROM:	Ply: 1 Qty: 1 Wgt: 68.6 lbs	**Job Number:** 24070306 7725 RES. **Truss Label:** CJ7A	DRW: ... / ... 07/24/2024

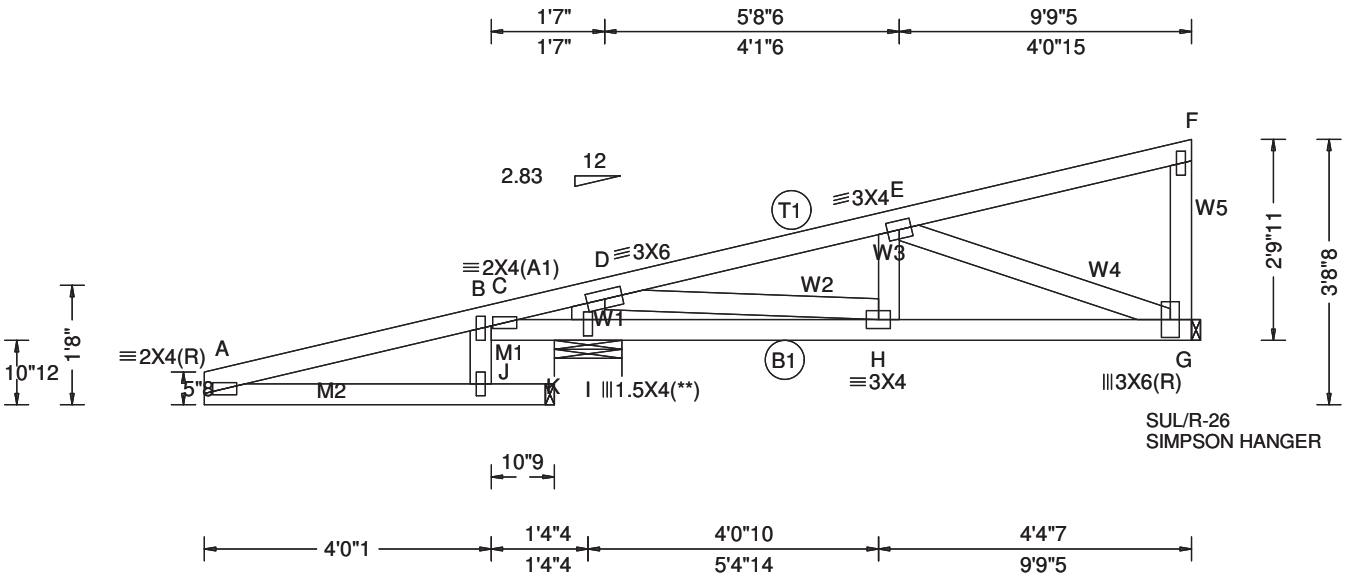

Loading Criteria (psf)

TCLL:	30.00
TCDL:	15.00
BCLL:	0.00
BCDL:	10.00
Des Ld:	55.00
NCBCLL:	10.00
Soffit:	2.00

Load Duration: 1.25
Spacing: 24.0 "

Wind Criteria
Wind Std: ASCE 7-22
Speed: 175 mph
Enclosure: Closed
Risk Category: II
EXP: C Kzt: NA
Mean Height: 15.00 ft
TCDL: 6.0 psf
BCDL: 6.0 psf
MWFRS Parallel Dist: 0 to h/2
C&C Dist a: 3.00 ft
Loc. from endwall: not in 4.50 ft
GCpi: 0.18
Wind Duration: 1.60

Snow Criteria (Pg,Pf in PSF)
Pg: NA Ct: NA CAT: NA
Pf: NA Ce: NA
Lu: NA Cs: NA
Snow Duration: NA

Building Code:
FBC 8th Ed. 2023 Res. HVHZ
TPI Std: 2014
Rep Fac: Varies by Ld Case
FT/RT:20(0)/10(0)
Plate Type(s):
WAVE

Defl/CSI Criteria

PP Deflection in	loc	L/defl	L/#
VERT(LL): -0.021	H	999	360
VERT(CL): 0.026	H	999	240
HORZ(LL): -0.005	F	-	-
HORZ(TL): 0.009	F	-	-

Creep Factor: 2.0
Max TC CSI: 0.481
Max BC CSI: 0.506
Max Web CSI: 0.223
Mfg Specified Camber:

VIEW Ver: 23.02.01A.1204.18

▲ Maximum Reactions (lbs)

	Gravity			Non-Gravity		
Loc	R+	/ R-	/ Rh	/ Rw	/ U	/ RL
K	-	/-	/211	/-	/-	/86
I	554	/-	/211	/-	/591	/86
G	370	/-	/-	/-	/274	/-

Wind reactions based on MWFRS
K Brg Wid = 1.5 Min Req = -
I Brg Wid = 11.3 Min Req = 1.5 (Truss)
G Brg Wid = 1.5 Min Req = -
Bearing I is a rigid surface.

Maximum Top Chord Forces Per Ply (lbs)

Chords	Tens.	Comp.	Chords	Tens.	Comp.
A - B	240	- 103	D - E	629	- 689
B - C	187	- 75	E - F	36	- 64
C - D	536	- 190			

Maximum Bot Chord Forces Per Ply (lbs)

Chords	Tens.	Comp.	Chords	Tens.	Comp.
C - I	67	- 307	H - G	655	- 584
I - H	0	- 366			

Maximum Web Forces Per Ply (lbs)

Webs	Tens.	Comp.	Webs	Tens.	Comp.
A - J	86	- 210	H - E	88	- 94
J - K	86	- 211	E - G	618	- 687
I - D	480	- 462	F - G	31	- 73
D - H	960	- 602			

Maximum Gable Forces Per Ply (lbs)

Gables	Tens.	Comp.
B - J	55	- 2

Lumber
Top chord: 2x4 SP #2;
Bot chord: 2x4 SP #2;
Webs: 2x4 SP #2; W1 2x6 SP #2;
Lt Level Return: 2x4 SP #2;

Special Loads
------(Lumber Dur.Fac.=1.25 / Plate Dur.Fac.=1.25)
TC: From 1 plf at -4.07 to 90 plf at 0.00
TC: From 2 plf at 0.00 to 2 plf at 9.77
BC: From 2 plf at 0.00 to 2 plf at 9.77
PLB: From 4 plf at -3.97 to 4 plf at -0.04
TC: -27 lb Conc. Load at 1.41
TC: 136 lb Conc. Load at 4.24
TC: 289 lb Conc. Load at 7.07
BC: 7 lb Conc. Load at 1.41
BC: 39 lb Conc. Load at 4.24
BC: 168 lb Conc. Load at 7.07

Plating Notes
All plates are 1.5X4 except as noted.
(**) 1 plate(s) require special positioning. Refer to scaled plate plot details for special positioning requirements.

Loading
Gable end supports 8" max rake overhang. Top chord must not be cut or notched.

Wind
Wind loads and reactions based on MWFRS.
End verticals not exposed to wind pressure.
Wind loading based on both gable and hip roof types.

Additional Notes
The maximum horizontal reaction is 211#
***** BEARING ANALOG MODIFIED! *****

****WARNING**** READ AND FOLLOW ALL NOTES ON THIS DRAWING!
****IMPORTANT**** FURNISH THIS DRAWING TO ALL CONTRACTORS INCLUDING THE INSTALLERS

Trusses require extreme care in fabricating, handling, shipping, installing and bracing. Refer to and follow the latest edition of BCSI (Building Component Safety Information, by TPI and SBCA) for safety practices prior to performing these functions. Installers shall provide temporary bracing per BCSI. Unless noted otherwise, top chord shall have properly attached structural sheathing and bottom chord shall have a properly attached rigid ceiling. Locations shown for permanent lateral restraint of webs shall have continuous lateral restraint (CLR), installed with diagonal bracing installed on the CLR per BCSI sections B3, B7, or B10, as applicable. Apply plates to each face of truss and position as shown above and on the Joint Details, unless noted otherwise. Refer to drawings 160A-Z for standard plate positions. Refer to job's General Notes page for additional information.

Alpine, a division of ITW Building Components Group Inc. shall not be responsible for any deviation from this drawing, any failure to build the truss in conformance with ANSI/TPI 1, or for handling, shipping, installation and bracing of trusses. A seal on this drawing or cover page listing this drawing, indicates acceptance of professional engineering responsibility solely for the design shown. The suitability and use of this drawing for any structure is the responsibility of the Building Designer per ANSI/TPI 1 Sec.2.

For more information see these web sites: Alpine: alpineitw.com; TPI: tpinst.org; SBCA: sbcacomponents.com; ICC: iccsafe.org; AWC: awc.org

SEQN: 139548 / T11 / HIP_ FROM:	Ply: 1 Qty: 4 Wgt: 75.6 lbs	**Job Number:** 24070306 7725 RES. **Truss Label:** CJ7B	DRW: ... / ... 07/23/2024

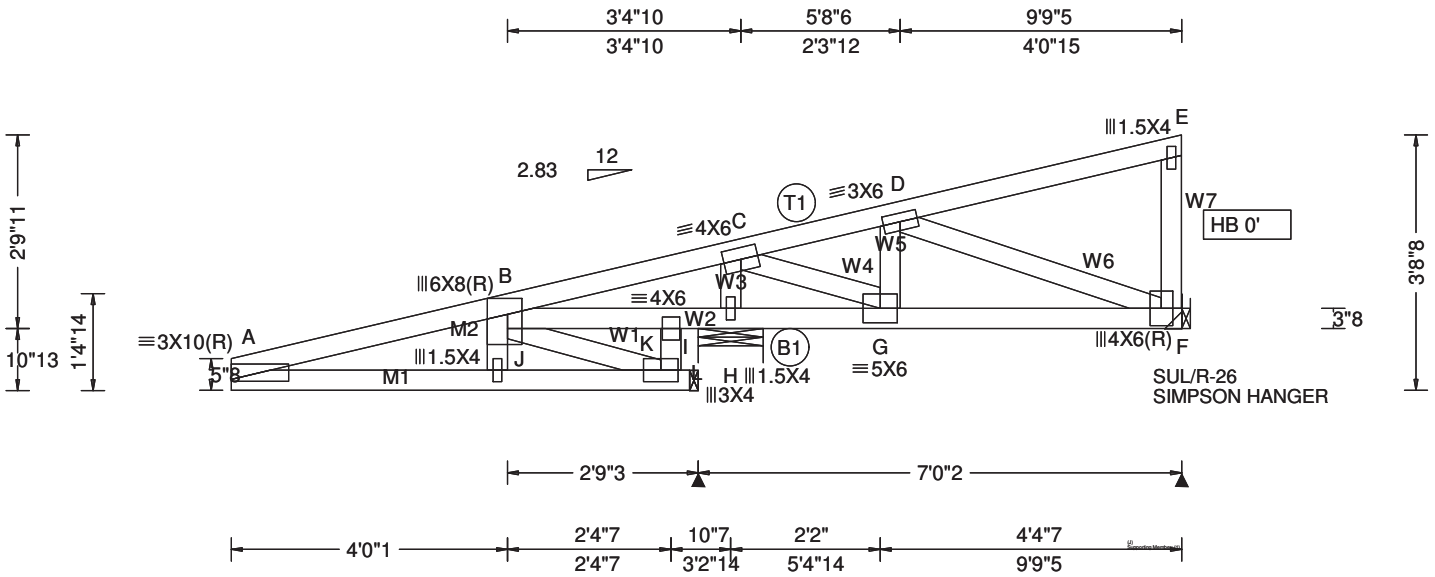

Loading Criteria (psf)

TCLL:	30.00
TCDL:	15.00
BCLL:	0.00
BCDL:	10.00
Des Ld:	55.00
NCBCLL:	10.00
Soffit:	2.00

Load Duration: 1.25
Spacing: 24.0 "

Wind Criteria
Wind Std: ASCE 7-22
Speed: 175 mph
Enclosure: Closed
Risk Category: II
EXP: C Kzt: NA
Mean Height: 15.18 ft
TCDL: 6.0 psf
BCDL: 6.0 psf
MWFRS Parallel Dist: 0 to h/2
C&C Dist a: 3.00 ft
Loc. from endwall: not in 9.00 ft
GCpi: 0.18
Wind Duration: 1.60

Snow Criteria (Pg,Pf in PSF)
Pg: NA Ct: NA CAT: NA
Pf: NA Ce: NA
Lu: NA Cs: NA
Snow Duration: NA

Building Code:
FBC 8th Ed. 2023 Res. HVHZ
TPI Std: 2014
Rep Fac: Varies by Ld Case
FT/RT:20(0)/10(0)
Plate Type(s):
WAVE

Defl/CSI Criteria

PP Deflection in	loc	L/defl	L/#
VERT(LL): 0.035	I	91	360
VERT(CL): 0.067	I	47	240
HORZ(LL): -0.012	C	-	-
HORZ(TL): 0.023	C	-	-

Creep Factor: 2.0
Max TC CSI: 0.696
Max BC CSI: 0.869
Max Web CSI: 0.381
Mfg Specified Camber:

VIEW Ver: 23.02.01A.1204.18

▲ Maximum Reactions (lbs)

Loc	Gravity R+	Gravity / R-	/ Rh	Non-Gravity / Rw	/ U	/ RL
L	-	/-	/4350	/-	/-	/1898
I	1814	/-	/4350	/-	/823	/1898
F	139	/-333	/-	/195	/-	/-

Wind reactions based on MWFRS
L Brg Wid = 1.5 Min Req = -
I Brg Wid = 11.3 Min Req = 2.1 (Truss)
F Brg Wid = - Min Req = -
Bearing I is a rigid surface.

Maximum Top Chord Forces Per Ply (lbs)

Chords	Tens.	Comp.	Chords	Tens.	Comp.
A - B	2808	- 1214	C - D	1244	- 574
B - C	2954	- 1263	D - E	10	- 22

Maximum Bot Chord Forces Per Ply (lbs)

Chords	Tens.	Comp.	Chords	Tens.	Comp.
B - I	1348	- 617	H - G	1162	- 2730
I - H	1487	- 676	G - F	491	- 1085

Maximum Web Forces Per Ply (lbs)

Webs	Tens.	Comp.	Webs	Tens.	Comp.
A - J	1164	- 2702	H - C	535	- 1188
J - B	291	- 104	C - G	1690	- 676
J - K	1231	- 2868	G - D	382	- 761
B - K	670	- 1482	D - F	1163	- 524
K - I	720	- 311	E - F	11	- 53
K - L	1898	- 4350			

Lumber
Top chord: 2x4 SP #1;
Bot chord: 2x4 SP #2;
Webs: 2x4 SP #2;
Lt Level Return: 2x4 SP #2;

Special Loads

------(Lumber Dur.Fac.=1.25 / Plate Dur.Fac.=1.25)

TC: From	1 plf at	-4.07 to	90 plf at	0.00
TC: From	2 plf at	0.00 to	2 plf at	9.77
BC: From	20 plf at	0.00 to	20 plf at	2.64
BC: From	20 plf at	2.64 to	2 plf at	9.78
PLB: From	4 plf at	-3.97 to	4 plf at	-0.04

TC: 819 lb Conc. Load at -3.68
TC: 99 lb Conc. Load at 1.41
TC: -26 lb Conc. Load at 4.24
TC: 92 lb Conc. Load at 7.07
BC: 74 lb Conc. Load at 1.41
BC: -25 lb Conc. Load at 4.24
BC: 38 lb Conc. Load at 7.07

Wind

Wind loads and reactions based on MWFRS.

Right end vertical not exposed to wind pressure.

Wind loading based on both gable and hip roof types.

Additional Notes

Negative reaction(s) of -333# MAX. from a non-wind load case requires uplift connection. See Maximum Reactions.

The maximum horizontal reaction is 4350#

***** BEARING ANALOG MODIFIED! *****

****WARNING**** READ AND FOLLOW ALL NOTES ON THIS DRAWING!
****IMPORTANT**** FURNISH THIS DRAWING TO ALL CONTRACTORS INCLUDING THE INSTALLERS
Trusses require extreme care in fabricating, handling, shipping, installing and bracing. Refer to and follow the latest edition of BCSI (Building Component Safety Information, by TPI and SBCA) for safety practices prior to performing these functions. Installers shall provide temporary bracing per BCSI. Unless noted otherwise, top chord shall have properly attached structural sheathing and bottom chord shall have a properly attached rigid ceiling. Locations shown for permanent lateral restraint of webs shall have continuous lateral restraint (CLR), installed with diagonal bracing installed on the CLR per BCSI sections B3, B7, or B10, as applicable. Apply plates to each face of truss and position as shown above and on the Joint Details, unless noted otherwise. Refer to drawings 160A-Z for standard plate positions. Refer to job's General Notes page for additional information.
Alpine, a division of ITW Building Components Group Inc. shall not be responsible for any deviation from this drawing, any failure to build the truss in conformance with ANSI/TPI 1, or for handling, shipping, installation and bracing of trusses. A seal on this drawing or cover page listing this drawing, indicates acceptance of professional engineering responsibility solely for the design shown. The suitability and use of this drawing for any structure is the responsibility of the Building Designer per ANSI/TPI 1 Sec.2.
For more information see these web sites: Alpine: alpineitw.com; TPI: tpinst.org; SBCA: sbcacomponents.com; ICC: iccsafe.org; AWC: awc.org

SEQN: 139551 / T119 / HIP_ FROM:	Ply: 1 Qty: 1 Wgt: 60.2 lbs	**Job Number:** 24070306 7725 RES. **Truss Label:** CJ7P	DRW: ... / ... 07/24/2024

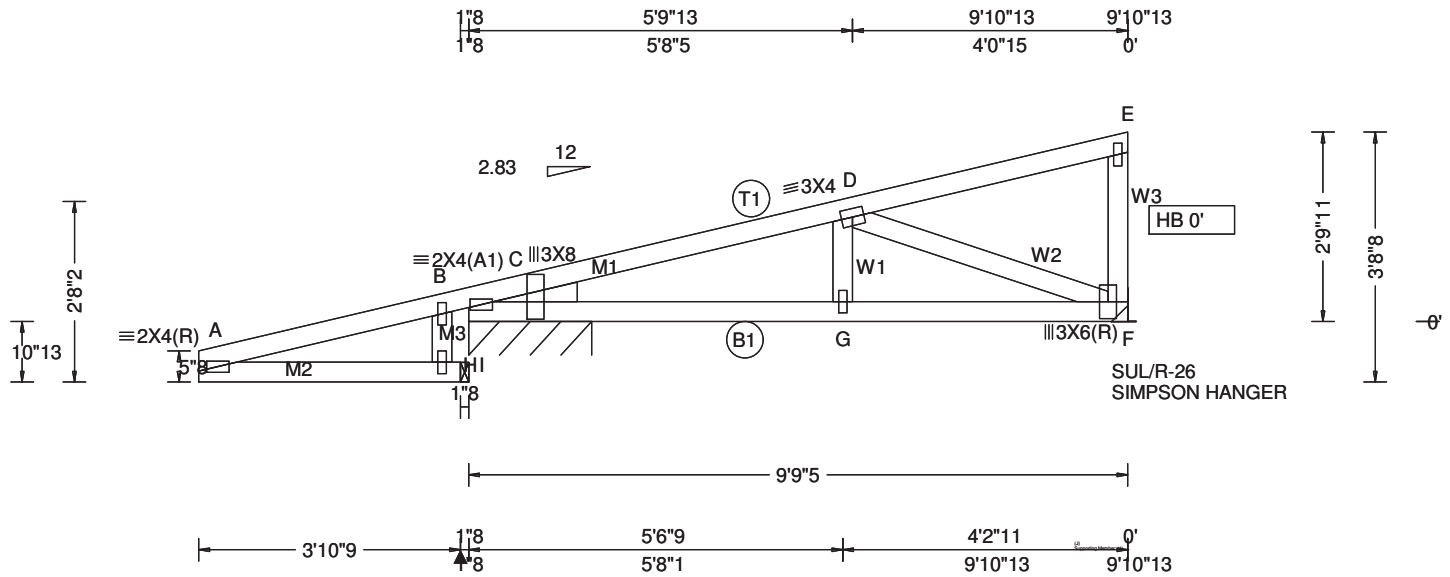

Loading Criteria (psf)

TCLL:	30.00
TCDL:	15.00
BCLL:	0.00
BCDL:	10.00
Des Ld:	55.00
NCBCLL:	10.00
Soffit:	2.00

Load Duration: 1.25
Spacing: 24.0 "

Wind Criteria
Wind Std: ASCE 7-22
Speed: 175 mph
Enclosure: Part. Enc.
Risk Category: II
EXP: C Kzt: NA
Mean Height: 15.00 ft
TCDL: 6.0 psf
BCDL: 6.0 psf
MWFRS Parallel Dist: 0 to h/2
C&C Dist a: 3.00 ft
Loc. from endwall: not in 9.00 ft
GCpi: 0.55
Wind Duration: 1.60

Snow Criteria (Pg,Pf in PSF)
Pg: NA Ct: NA CAT: NA
Pf: NA Ce: NA
Lu: NA Cs: NA
Snow Duration: NA

Building Code:
FBC 8th Ed. 2023 Res. HVHZ
TPI Std: 2014
Rep Fac: Varies by Ld Case
FT/RT:20(0)/10(0)
Plate Type(s):
WAVE

Defl/CSI Criteria

PP Deflection in	loc	L/defl	L/#
VERT(LL): -0.043	G	999	360
VERT(CL): 0.043	G	999	240
HORZ(LL): 0.080	E	-	-
HORZ(TL): 0.120	E	-	-

Creep Factor: 2.0
Max TC CSI: 0.620
Max BC CSI: 0.437
Max Web CSI: 0.250
Mfg Specified Camber:

VIEW Ver: 23.02.01A.1204.18

▲ Maximum Reactions (lbs), or *=PLF

	Gravity			Non-Gravity		
Loc	R+	/ R-	/ Rh	/ Rw	/ U	/ RL
I	-	/-	/-	/-	/-	/-
B*	275	/-	/-	/-	/289	/-
F	386	/-	/-	/-	/403	/-
C		/-220				

Wind reactions based on MWFRS
I Brg Wid = 1.5 Min Req = -
B Brg Wid = 21.9 Min Req = -
F Brg Wid = - Min Req = -
Bearing B is a rigid surface.

Maximum Top Chord Forces Per Ply (lbs)

Chords	Tens.	Comp.	Chords	Tens.	Comp.
A - B	50	-37	C - D	795	-770
B - C	45	-34	D - E	54	-58

Maximum Bot Chord Forces Per Ply (lbs)

Chords	Tens.	Comp.	Chords	Tens.	Comp.
C - G	1486	-1539	G - F	733	-755

Maximum Web Forces Per Ply (lbs)

Webs	Tens.	Comp.	Webs	Tens.	Comp.
A - H	10	-17	G - D	167	-194
B - H	8	0	D - F	793	-771
H - I	0	0	E - F	63	-71

Lumber
Top chord: 2x4 SP #2;
Bot chord: 2x4 SP #2;
Webs: 2x4 SP #2;
Lt Wedge: 2x4 SP #2;Lt Level Return: 2x4 SP #2;

Special Loads
------(Lumber Dur.Fac.=1.25 / Plate Dur.Fac.=1.25)

TC: From	1 plf at	-4.07 to	90 plf at	0.00
TC: From	2 plf at	0.00 to	2 plf at	9.77
BC: From	2 plf at	0.00 to	2 plf at	9.77
PLB: From	4 plf at	-3.97 to	4 plf at	-0.17

TC: -27 lb Conc. Load at 1.41
TC: 128 lb Conc. Load at 4.24
TC: 268 lb Conc. Load at 7.07
BC: 7 lb Conc. Load at 1.41
BC: 60 lb Conc. Load at 4.24
BC: 125 lb Conc. Load at 7.07

Plating Notes
All plates are 1.5X4 except as noted.

Wind
Wind loads and reactions based on MWFRS.
Right end vertical not exposed to wind pressure.
Wind loading based on both gable and hip roof types.

Additional Notes
***** BEARING ANALOG MODIFIED! *****

****WARNING**** READ AND FOLLOW ALL NOTES ON THIS DRAWING!
****IMPORTANT**** FURNISH THIS DRAWING TO ALL CONTRACTORS INCLUDING THE INSTALLERS
Trusses require extreme care in fabricating, handling, shipping, installing and bracing. Refer to and follow the latest edition of BCSI (Building Component Safety Information, by TPI and SBCA) for safety practices prior to performing these functions. Installers shall provide temporary bracing per BCSI. Unless noted otherwise, top chord shall have properly attached structural sheathing and bottom chord shall have a properly attached rigid ceiling. Locations shown for permanent lateral restraint of webs shall have continuous lateral restraint (CLR), installed with diagonal bracing installed on the CLR per BCSI sections B3, B7, or B10, as applicable. Apply plates to each face of truss and position as shown above and on the Joint Details, unless noted otherwise. Refer to drawings 160A-Z for standard plate positions. Refer to job's General Notes page for additional information.
Alpine, a division of ITW Building Components Group Inc. shall not be responsible for any deviation from this drawing, any failure to build the truss in conformance with ANSI/TPI 1, or for handling, shipping, installation and bracing of trusses. A seal on this drawing or cover page listing this drawing, indicates acceptance of professional engineering responsibility solely for the design shown. The suitability and use of this drawing for any structure is the responsibility of the Building Designer per ANSI/TPI 1 Sec.2.
For more information see these web sites: Alpine: alpineitw.com; TPI: tpinst.org; SBCA: sbcacomponents.com; ICC: iccsafe.org; AWC: awc.org

SEQN: 206608 / T19 / HIP_ FROM:	Ply: 1 Qty: 2 Wgt: 61.6 lbs	**Job Number:** 24070306 7725 RES. **Truss Label:** CJ7AP	DRW: ... / ... 07/24/2024

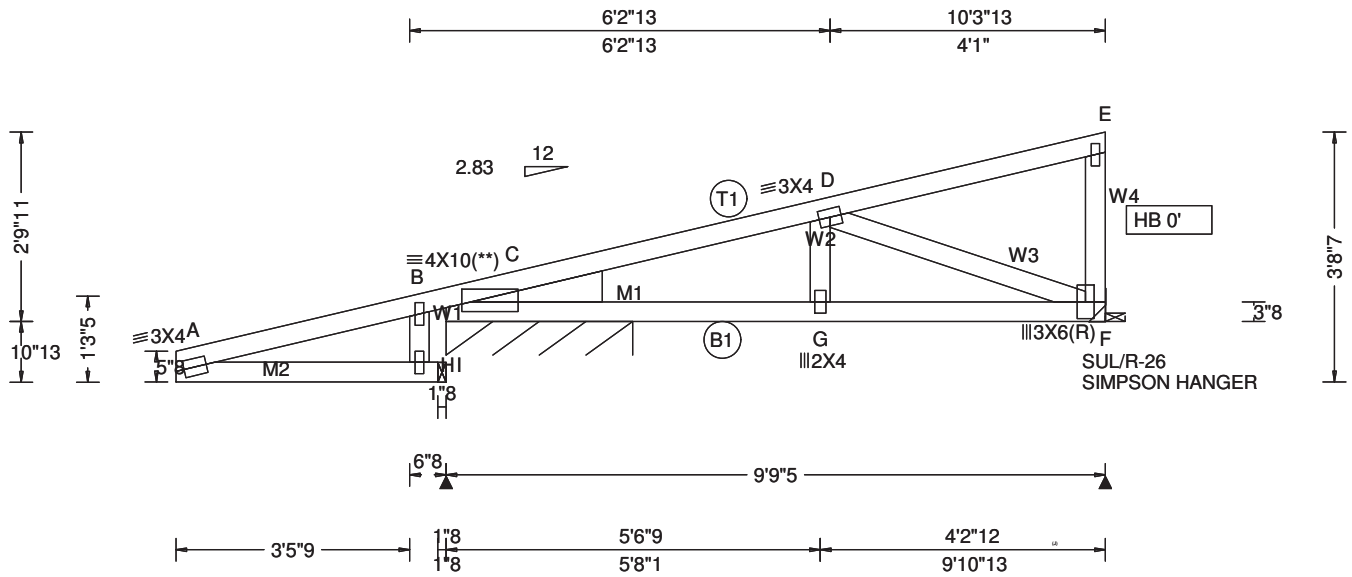

Loading Criteria (psf)

TCLL: 30.00
TCDL: 15.00
BCLL: 0.00
BCDL: 10.00
Des Ld: 55.00
NCBCLL: 10.00
Soffit: 2.00
Load Duration: 1.25
Spacing: 24.0 "

Wind Criteria

Wind Std: ASCE 7-22
Speed: 175 mph
Enclosure: Part. Enc.
Risk Category: II
EXP: C Kzt: NA
Mean Height: 21.68 ft
TCDL: 6.0 psf
BCDL: 6.0 psf
MWFRS Parallel Dist: 0 to h/2
C&C Dist a: 3.00 ft
Loc. from endwall: not in 9.00 ft
GCpi: 0.55
Wind Duration: 1.60

Snow Criteria (Pg,Pf in PSF)

Pg: NA Ct: NA CAT: NA
Pf: NA Ce: NA
Lu: NA Cs: NA
Snow Duration: NA

Building Code:
FBC 8th Ed. 2023 Res. HVHZ
TPI Std: 2014
Rep Fac: Varies by Ld Case
FT/RT:20(0)/10(0)
Plate Type(s):
WAVE

Defl/CSI Criteria

PP Deflection in	loc	L/defl	L/#
VERT(LL): -0.046	G	999	360
VERT(CL): 0.040	G	999	240
HORZ(LL): -0.010	F	-	-
HORZ(TL): 0.010	F	-	-

Creep Factor: 2.0
Max TC CSI: 0.325
Max BC CSI: 0.964
Max Web CSI: 0.263
Mfg Specified Camber:

VIEW Ver: 23.02.01A.1204.18

▲ Maximum Reactions (lbs), or *=PLF

	Gravity			Non-Gravity		
Loc	R+	/ R-	/ Rh	/ Rw	/ U	/ RL
I	-	/-	/223	/-	/-	/188
B*	188	/-	/80	/-	/231	/68
F	419	/-	/-	/-	/501	/-

Wind reactions based on MWFRS
I Brg Wid = 1.5 Min Req = -
B Brg Wid = 33.2 Min Req = -
F Brg Wid = - Min Req = -
Bearing B is a rigid surface.

Maximum Top Chord Forces Per Ply (lbs)

Chords	Tens.	Comp.	Chords	Tens.	Comp.
A - B	236	- 204	C - D	994	- 835
B - C	262	- 225	D - E	14	- 23

Maximum Bot Chord Forces Per Ply (lbs)

Chords	Tens.	Comp.	Chords	Tens.	Comp.
C - G	812	- 1018	G - F	771	- 918

Maximum Web Forces Per Ply (lbs)

Webs	Tens.	Comp.	Webs	Tens.	Comp.
A - H	178	- 212	G - D	499	- 602
B - H	24	- 10	D - F	963	- 809
H - I	188	- 223	E - F	7	- 55

Lumber

Top chord: 2x4 SP #2;
Bot chord: 2x4 SP #2;
Webs: 2x4 SP #2;
Lt Wedge: 2x6 SP #2;Lt Level Return: 2x4 SP #2;

Special Loads

------(Lumber Dur.Fac.=1.25 / Plate Dur.Fac.=1.25)

TC: From	1 plf at	-4.07 to	90 plf at	0.00
TC: From	2 plf at	0.00 to	2 plf at	9.77
BC: From	2 plf at	0.00 to	2 plf at	9.78
PLB: From	4 plf at	-3.97 to	4 plf at	-0.17

TC: -27 lb Conc. Load at 1.41
TC: 159 lb Conc. Load at 4.24
TC: 307 lb Conc. Load at 7.07
BC: 7 lb Conc. Load at 1.41
BC: 55 lb Conc. Load at 4.24
BC: 131 lb Conc. Load at 7.07

Plating Notes

All plates are 1.5X4 except as noted.

(**) 1 plate(s) require special positioning. Refer to scaled plate plot details for special positioning requirements.

Wind

Wind loads and reactions based on MWFRS.

End verticals not exposed to wind pressure.

Wind loading based on both gable and hip roof types.

Additional Notes

The maximum horizontal reaction is 223#

***** BEARING ANALOG MODIFIED! *****

****WARNING**** READ AND FOLLOW ALL NOTES ON THIS DRAWING!
****IMPORTANT**** FURNISH THIS DRAWING TO ALL CONTRACTORS INCLUDING THE INSTALLERS
Trusses require extreme care in fabricating, handling, shipping, installing and bracing. Refer to and follow the latest edition of BCSI (Building Component Safety Information, by TPI and SBCA) for safety practices prior to performing these functions. Installers shall provide temporary bracing per BCSI. Unless noted otherwise, top chord shall have properly attached structural sheathing and bottom chord shall have a properly attached rigid ceiling. Locations shown for permanent lateral restraint of webs shall have continuous lateral restraint (CLR), installed with diagonal bracing installed on the CLR per BCSI sections B3, B7, or B10, as applicable. Apply plates to each face of truss and position as shown above and on the Joint Details, unless noted otherwise. Refer to drawings 160A-Z for standard plate positions. Refer to job's General Notes page for additional information.
Alpine, a division of ITW Building Components Group Inc. shall not be responsible for any deviation from this drawing, any failure to build the truss in conformance with ANSI/TPI 1, or for handling, shipping, installation and bracing of trusses. A seal on this drawing or cover page listing this drawing, indicates acceptance of professional engineering responsibility solely for the design shown. The suitability and use of this drawing for any structure is the responsibility of the Building Designer per ANSI/TPI 1 Sec.2.
For more information see these web sites: Alpine: alpineitw.com; TPI: tpinst.org; SBCA: sbcacomponents.com; ICC: iccsafe.org; AWC: awc.org

SEQN: 206611 / T18 / HIP_	Ply: 1	**Job Number:** 24070306	DRW:
FROM:	Qty: 4	7725 RES.	... / ... 07/24/2024
	Wgt: 61.6 lbs	**Truss Label:** CJ7BP	

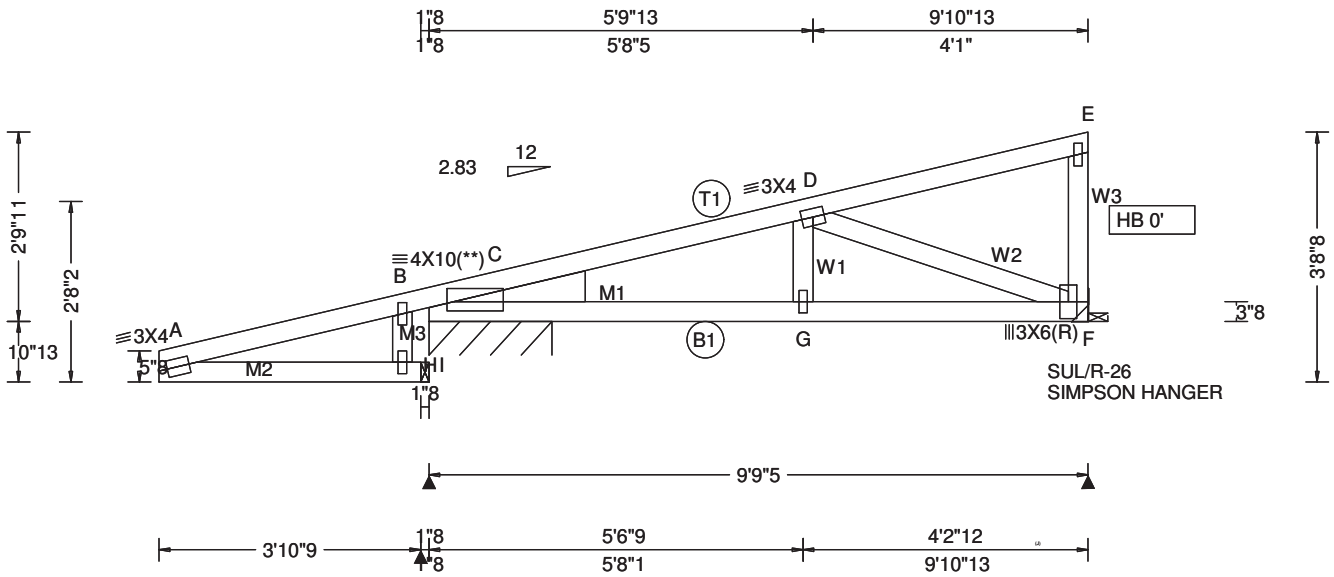

Loading Criteria (psf)

TCLL: 30.00
TCDL: 15.00
BCLL: 0.00
BCDL: 10.00
Des Ld: 55.00
NCBCLL: 10.00
Soffit: 2.00
Load Duration: 1.25
Spacing: 24.0 "

Wind Criteria

Wind Std: ASCE 7-22
Speed: 175 mph
Enclosure: Part. Enc.
Risk Category: II
EXP: C Kzt: NA
Mean Height: 15.00 ft
TCDL: 6.0 psf
BCDL: 6.0 psf
MWFRS Parallel Dist: 0 to h/2
C&C Dist a: 3.00 ft
Loc. from endwall: not in 9.00 ft
GCpi: 0.55
Wind Duration: 1.60

Snow Criteria (Pg,Pf in PSF)

Pg: NA Ct: NA CAT: NA
Pf: NA Ce: NA
Lu: NA Cs: NA
Snow Duration: NA

Building Code:
FBC 8th Ed. 2023 Res. HVHZ
TPI Std: 2014
Rep Fac: Varies by Ld Case
FT/RT:20(0)/10(0)
Plate Type(s):
WAVE

Defl/CSI Criteria

PP Deflection in	loc	L/defl	L/#
VERT(LL): -0.045	G	999	360
VERT(CL): 0.044	G	999	240
HORZ(LL): -0.011	F	-	-
HORZ(TL): 0.011	F	-	-

Creep Factor: 2.0
Max TC CSI: 0.531
Max BC CSI: 0.505
Max Web CSI: 0.288
Mfg Specified Camber:

VIEW Ver: 23.02.01A.1204.18

▲ Maximum Reactions (lbs), or *=PLF

Loc	Gravity R+	/ R-	/ Rh	Non-Gravity / Rw	/ U	/ RL
I	-	/-	/216	/-	/-	/141
B*	277	/-	/119	/-	/316	/78
F	442	/-	/-	/-	/480	/-

Wind reactions based on MWFRS
I Brg Wid = 1.5 Min Req = -
B Brg Wid = 21.9 Min Req = -
F Brg Wid = - Min Req = -
Bearing B is a rigid surface.

Maximum Top Chord Forces Per Ply (lbs)

Chords	Tens.	Comp.	Chords	Tens.	Comp.
A - B	231	- 156	C - D	949	- 886
B - C	256	- 171	D - E	67	- 67

Maximum Bot Chord Forces Per Ply (lbs)

Chords	Tens.	Comp.	Chords	Tens.	Comp.
C - G	853	- 917	G - F	842	- 900

Maximum Web Forces Per Ply (lbs)

Webs	Tens.	Comp.	Webs	Tens.	Comp.
A - H	135	- 206	G - D	168	- 221
B - H	23	- 7	D - F	946	- 886
H - I	141	- 216	E - F	78	- 80

Lumber

Top chord: 2x4 SP #2;
Bot chord: 2x4 SP #2;
Webs: 2x4 SP #2;
Lt Wedge: 2x6 SP #2;Lt Level Return: 2x4 SP #2;

Special Loads

------(Lumber Dur.Fac.=1.25 / Plate Dur.Fac.=1.25)

TC: From	1 plf at	-4.07 to	90 plf at	0.00
TC: From	2 plf at	0.00 to	2 plf at	9.77
BC: From	2 plf at	0.00 to	2 plf at	9.78
PLB: From	4 plf at	-3.97 to	4 plf at	-0.17

TC: -27 lb Conc. Load at 1.41
TC: 160 lb Conc. Load at 4.24
TC: 308 lb Conc. Load at 7.07
BC: 7 lb Conc. Load at 1.41
BC: 76 lb Conc. Load at 4.24
BC: 146 lb Conc. Load at 7.07

Plating Notes

All plates are 1.5X4 except as noted.

(**) 1 plate(s) require special positioning. Refer to scaled plate plot details for special positioning requirements.

Wind

Wind loads and reactions based on MWFRS.

Right end vertical not exposed to wind pressure.

Wind loading based on both gable and hip roof types.

Additional Notes

The maximum horizontal reaction is 216#

***** BEARING ANALOG MODIFIED! *****

****WARNING**** READ AND FOLLOW ALL NOTES ON THIS DRAWING!
****IMPORTANT**** FURNISH THIS DRAWING TO ALL CONTRACTORS INCLUDING THE INSTALLERS

Trusses require extreme care in fabricating, handling, shipping, installing and bracing. Refer to and follow the latest edition of BCSI (Building Component Safety Information, by TPI and SBCA) for safety practices prior to performing these functions. Installers shall provide temporary bracing per BCSI. Unless noted otherwise, top chord shall have properly attached structural sheathing and bottom chord shall have a properly attached rigid ceiling. Locations shown for permanent lateral restraint of webs shall have continuous lateral restraint (CLR), installed with diagonal bracing installed on the CLR per BCSI sections B3, B7, or B10, as applicable. Apply plates to each face of truss and position as shown above and on the Joint Details, unless noted otherwise. Refer to drawings 160A-Z for standard plate positions. Refer to job's General Notes page for additional information.

Alpine, a division of ITW Building Components Group Inc. shall not be responsible for any deviation from this drawing, any failure to build the truss in conformance with ANSI/TPI 1, or for handling, shipping, installation and bracing of trusses. A seal on this drawing or cover page listing this drawing, indicates acceptance of professional engineering responsibility solely for the design shown. The suitability and use of this drawing for any structure is the responsibility of the Building Designer per ANSI/TPI 1 Sec.2.

For more information see these web sites: Alpine: alpineitw.com; TPI: tpinst.org; SBCA: sbcacomponents.com; ICC: iccsafe.org; AWC: awc.org

SEQN: 206614 / T46 / HIP_ FROM:	Ply: 1 Qty: 2 Wgt: 60.2 lbs	**Job Number:** 24070306 7725 RES. **Truss Label:** CJ7CP	DRW: ... / ... 07/24/2024

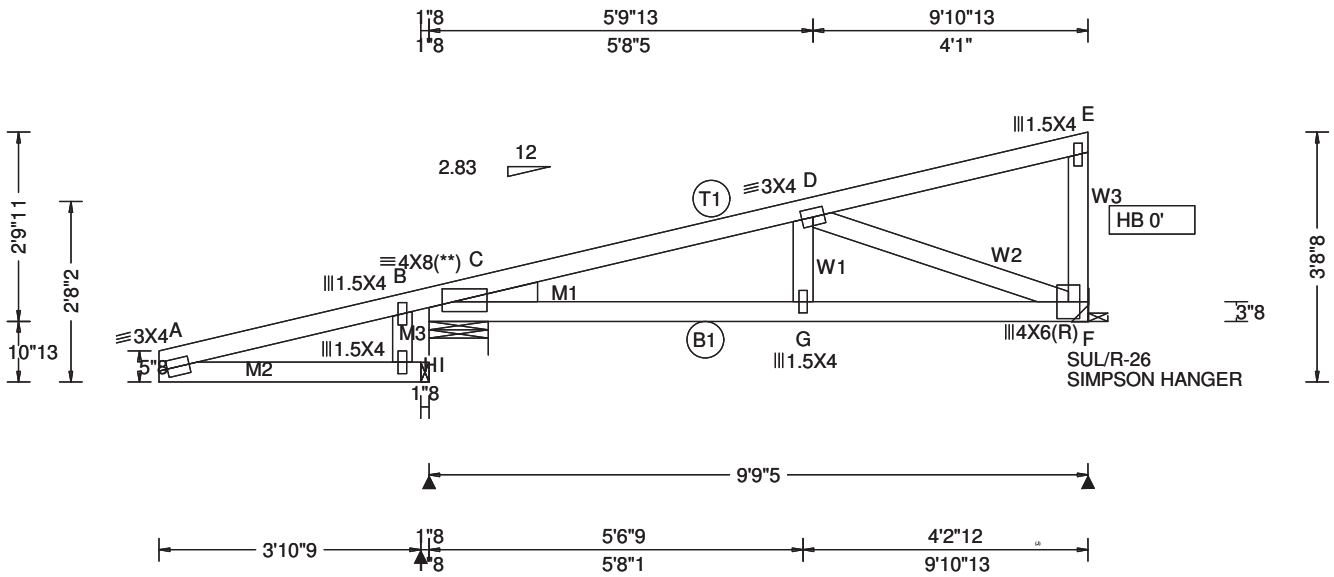

Loading Criteria (psf)

TCLL: 30.00
TCDL: 15.00
BCLL: 0.00
BCDL: 10.00
Des Ld: 55.00
NCBCLL: 10.00
Soffit: 2.00
Load Duration: 1.25
Spacing: 24.0 "

Wind Criteria

Wind Std: ASCE 7-22
Speed: 175 mph
Enclosure: Part. Enc.
Risk Category: II
EXP: C Kzt: NA
Mean Height: 15.00 ft
TCDL: 6.0 psf
BCDL: 6.0 psf
MWFRS Parallel Dist: 0 to h/2
C&C Dist a: 3.00 ft
Loc. from endwall: not in 9.00 ft
GCpi: 0.55
Wind Duration: 1.60

Snow Criteria (Pg,Pf in PSF)

Pg: NA Ct: NA CAT: NA
Pf: NA Ce: NA
Lu: NA Cs: NA
Snow Duration: NA

Building Code:
FBC 8th Ed. 2023 Res. HVHZ
TPI Std: 2014
Rep Fac: Varies by Ld Case
FT/RT:20(0)/10(0)
Plate Type(s):
WAVE

Defl/CSI Criteria

PP Deflection in	loc	L/defl	L/#
VERT(LL): -0.058	G	999	360
VERT(CL): 0.056	G	999	240
HORZ(LL): -0.016	F	-	-
HORZ(TL): 0.016	F	-	-

Creep Factor: 2.0
Max TC CSI: 0.615
Max BC CSI: 0.588
Max Web CSI: 0.329
Mfg Specified Camber:

VIEW Ver: 23.02.01A.1204.18

▲ Maximum Reactions (lbs)

Loc	Gravity R+	/ R-	/ Rh	Non-Gravity / Rw	/ U	/ RL
I	-	/-	/229	/-	/-	/135
B	515	/-	/229	/-	/627	/135
F	505	/-	/-	/-	/572	/-

Wind reactions based on MWFRS
I Brg Wid = 1.5 Min Req = -
B Brg Wid = 10.6 Min Req = 1.5 (Truss)
F Brg Wid = - Min Req = -
Bearing B is a rigid surface.

Maximum Top Chord Forces Per Ply (lbs)

Chords	Tens.	Comp.	Chords	Tens.	Comp.
A - B	242	- 151	C - D	1145	- 1013
B - C	268	- 165	D - E	80	- 75

Maximum Bot Chord Forces Per Ply (lbs)

Chords	Tens.	Comp.	Chords	Tens.	Comp.
C - G	974	- 1108	G - F	962	- 1090

Maximum Web Forces Per Ply (lbs)

Webs	Tens.	Comp.	Webs	Tens.	Comp.
A - H	129	- 217	G - D	193	- 257
B - H	24	- 6	D - F	1146	- 1012
H - I	135	- 229	F - E	92	- 93

Lumber

Top chord: 2x4 SP #2;
Bot chord: 2x4 SP #2;
Webs: 2x4 SP #2;
Lt Wedge: 2x4 SP #2;Lt Level Return: 2x4 SP #2;

Special Loads

------(Lumber Dur.Fac.=1.25 / Plate Dur.Fac.=1.25)

TC: From	1 plf at	-4.07 to	90 plf at	0.00
TC: From	2 plf at	0.00 to	2 plf at	9.77
BC: From	2 plf at	0.00 to	2 plf at	9.78
PLB: From	4 plf at	-3.97 to	4 plf at	-0.17

TC: -27 lb Conc. Load at 1.41
TC: 191 lb Conc. Load at 4.24
TC: 349 lb Conc. Load at 7.07
BC: 7 lb Conc. Load at 1.41
BC: 91 lb Conc. Load at 4.24
BC: 166 lb Conc. Load at 7.07

Plating Notes

(**) 1 plate(s) require special positioning. Refer to scaled plate plot details for special positioning requirements.

Wind

Wind loads and reactions based on MWFRS.

Right end vertical not exposed to wind pressure.

Wind loading based on both gable and hip roof types.

Additional Notes

The maximum horizontal reaction is 229#

***** BEARING ANALOG MODIFIED! *****

****WARNING**** READ AND FOLLOW ALL NOTES ON THIS DRAWING!
****IMPORTANT**** FURNISH THIS DRAWING TO ALL CONTRACTORS INCLUDING THE INSTALLERS
Trusses require extreme care in fabricating, handling, shipping, installing and bracing. Refer to and follow the latest edition of BCSI (Building Component Safety Information, by TPI and SBCA) for safety practices prior to performing these functions. Installers shall provide temporary bracing per BCSI. Unless noted otherwise, top chord shall have properly attached structural sheathing and bottom chord shall have a properly attached rigid ceiling. Locations shown for permanent lateral restraint of webs shall have continuous lateral restraint (CLR), installed with diagonal bracing installed on the CLR per BCSI sections B3, B7, or B10, as applicable. Apply plates to each face of truss and position as shown above and on the Joint Details, unless noted otherwise. Refer to drawings 160A-Z for standard plate positions. Refer to job's General Notes page for additional information.
Alpine, a division of ITW Building Components Group Inc. shall not be responsible for any deviation from this drawing, any failure to build the truss in conformance with ANSI/TPI 1, or for handling, shipping, installation and bracing of trusses. A seal on this drawing or cover page listing this drawing, indicates acceptance of professional engineering responsibility solely for the design shown. The suitability and use of this drawing for any structure is the responsibility of the Building Designer per ANSI/TPI 1 Sec.2.
For more information see these web sites: Alpine: alpineitw.com; TPI: tpinst.org; SBCA: sbcacomponents.com; ICC: iccsafe.org; AWC: awc.org

SEQN: 204019 / T85 / HIP_ FROM:	Ply: 1 Qty: 1 Wgt: 47.6 lbs	**Job Number:** 24070306 7725 RES. **Truss Label:** CJ6	DRW: ... / ... 07/24/2024

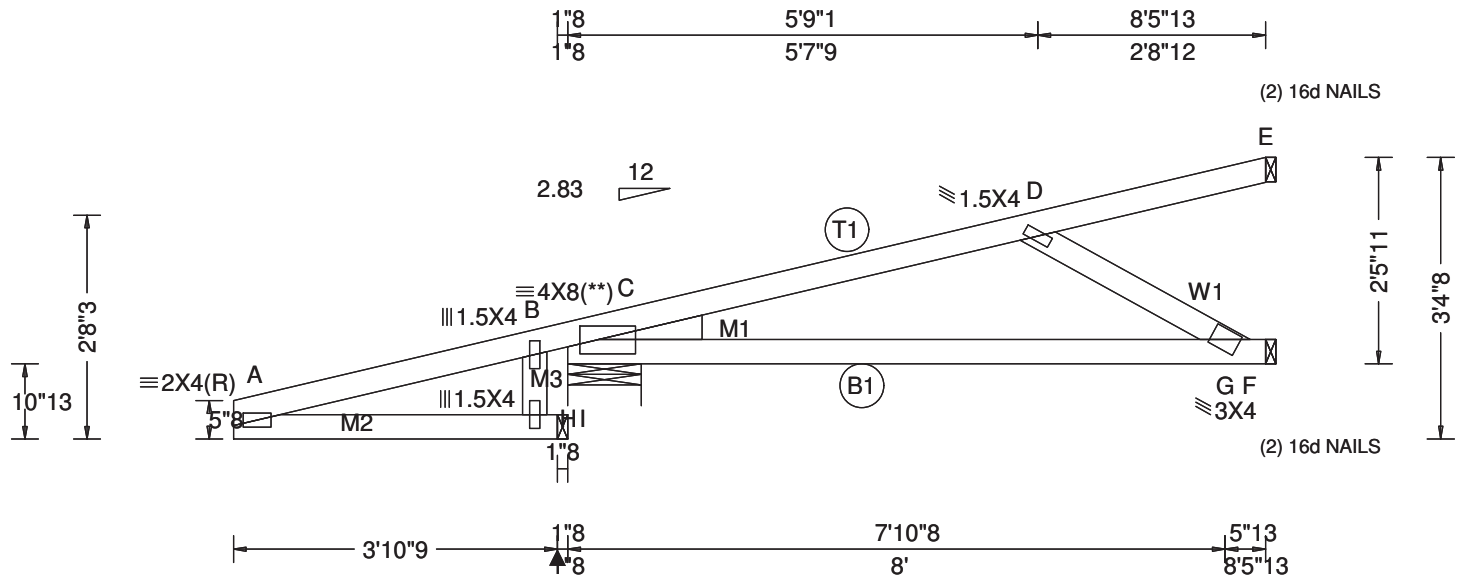

Loading Criteria (psf)

TCLL:	30.00
TCDL:	15.00
BCLL:	0.00
BCDL:	10.00
Des Ld:	55.00
NCBCLL:	10.00
Soffit:	2.00

Load Duration: 1.25
Spacing: 24.0 "

Wind Criteria
Wind Std: ASCE 7-22
Speed: 175 mph
Enclosure: Closed
Risk Category: II
EXP: C Kzt: NA
Mean Height: 15.00 ft
TCDL: 6.0 psf
BCDL: 6.0 psf
MWFRS Parallel Dist: 0 to h/2
C&C Dist a: 3.00 ft
Loc. from endwall: not in 4.50 ft
GCpi: 0.18
Wind Duration: 1.60

Snow Criteria (Pg,Pf in PSF)
Pg: NA Ct: NA CAT: NA
Pf: NA Ce: NA
Lu: NA Cs: NA
Snow Duration: NA

Building Code:
FBC 8th Ed. 2023 Res. HVHZ
TPI Std: 2014
Rep Fac: Varies by Ld Case
FT/RT:20(0)/10(0)
Plate Type(s):
WAVE

Defl/CSI Criteria

PP Deflection in	loc	L/defl	L/#
VERT(LL): -0.031	C	999	360
VERT(CL): 0.080	C	999	240
HORZ(LL): -0.009	C	-	-
HORZ(TL): 0.025	C	-	-

Creep Factor: 2.0
Max TC CSI: 0.695
Max BC CSI: 0.528
Max Web CSI: 0.141
Mfg Specified Camber:

VIEW Ver: 23.02.01A.1204.18

▲ Maximum Reactions (lbs)

Loc	Gravity R+	/ R-	/ Rh	Non-Gravity / Rw	/ U	/ RL
I	-	/-	/194	/-	/-	/40
B	447	/-	/194	/-	/339	/40
F	367	/-	/-	/-	/162	/-
E	217	/-	/-	/-	/73	/-

Wind reactions based on MWFRS
I Brg Wid = 1.5 Min Req = -
B Brg Wid = 10.6 Min Req = 1.5 (Truss)
F Brg Wid = 1.5 Min Req = -
E Brg Wid = 1.5 Min Req = -
Bearing B is a rigid surface.

Maximum Top Chord Forces Per Ply (lbs)

Chords	Tens.	Comp.	Chords	Tens.	Comp.
A - B	213	- 58	C - D	278	- 633
B - C	235	- 61	D - E	50	- 70

Maximum Bot Chord Forces Per Ply (lbs)

Chords	Tens.	Comp.	Chords	Tens.	Comp.
C - G	601	- 270	G - F	0	0

Maximum Web Forces Per Ply (lbs)

Webs	Tens.	Comp.	Webs	Tens.	Comp.
A - H	42	- 187	H - I	40	- 194
B - H	22	0	D - G	320	- 717

Lumber

Top chord: 2x4 SP #2;
Bot chord: 2x4 SP #2;
Webs: 2x4 SP #2;
Lt Wedge: 2x4 SP #2;Lt Level Return: 2x4 SP #2;

Special Loads

------(Lumber Dur.Fac.=1.25 / Plate Dur.Fac.=1.25)

TC: From	1 plf at	-4.07 to	90 plf at	0.00
TC: From	2 plf at	0.00 to	2 plf at	8.36
BC: From	2 plf at	0.00 to	2 plf at	8.36
PLB: From	4 plf at	-3.97 to	4 plf at	-0.17

TC: -27 lb Conc. Load at 1.41
TC: 191 lb Conc. Load at 4.24
TC: 349 lb Conc. Load at 7.07
BC: 7 lb Conc. Load at 1.41
BC: 91 lb Conc. Load at 4.24
BC: 166 lb Conc. Load at 7.07

Plating Notes

(**) 1 plate(s) require special positioning. Refer to scaled plate plot details for special positioning requirements.

Wind

Wind loads and reactions based on MWFRS.

Wind loading based on both gable and hip roof types.

Additional Notes

***** BEARING ANALOG MODIFIED! *****

****WARNING**** READ AND FOLLOW ALL NOTES ON THIS DRAWING!
****IMPORTANT**** FURNISH THIS DRAWING TO ALL CONTRACTORS INCLUDING THE INSTALLERS
Trusses require extreme care in fabricating, handling, shipping, installing and bracing. Refer to and follow the latest edition of BCSI (Building Component Safety Information, by TPI and SBCA) for safety practices prior to performing these functions. Installers shall provide temporary bracing per BCSI. Unless noted otherwise, top chord shall have properly attached structural sheathing and bottom chord shall have a properly attached rigid ceiling. Locations shown for permanent lateral restraint of webs shall have continuous lateral restraint (CLR), installed with diagonal bracing installed on the CLR per BCSI sections B3, B7, or B10, as applicable. Apply plates to each face of truss and position as shown above and on the Joint Details, unless noted otherwise. Refer to drawings 160A-Z for standard plate positions. Refer to job's General Notes page for additional information.
Alpine, a division of ITW Building Components Group Inc. shall not be responsible for any deviation from this drawing, any failure to build the truss in conformance with ANSI/TPI 1, or for handling, shipping, installation and bracing of trusses. A seal on this drawing or cover page listing this drawing, indicates acceptance of professional engineering responsibility solely for the design shown. The suitability and use of this drawing for any structure is the responsibility of the Building Designer per ANSI/TPI 1 Sec.2.
For more information see these web sites: Alpine: alpineitw.com; TPI: tpinst.org; SBCA: sbcacomponents.com; ICC: iccsafe.org; AWC: awc.org

SEQN: 204016 / T28 / HIP_ FROM:	Ply: 1 Qty: 1 Wgt: 33.6 lbs	**Job Number:** 24070306 7725 RES. **Truss Label:** CJ38	DRW: ... / ... 07/24/2024

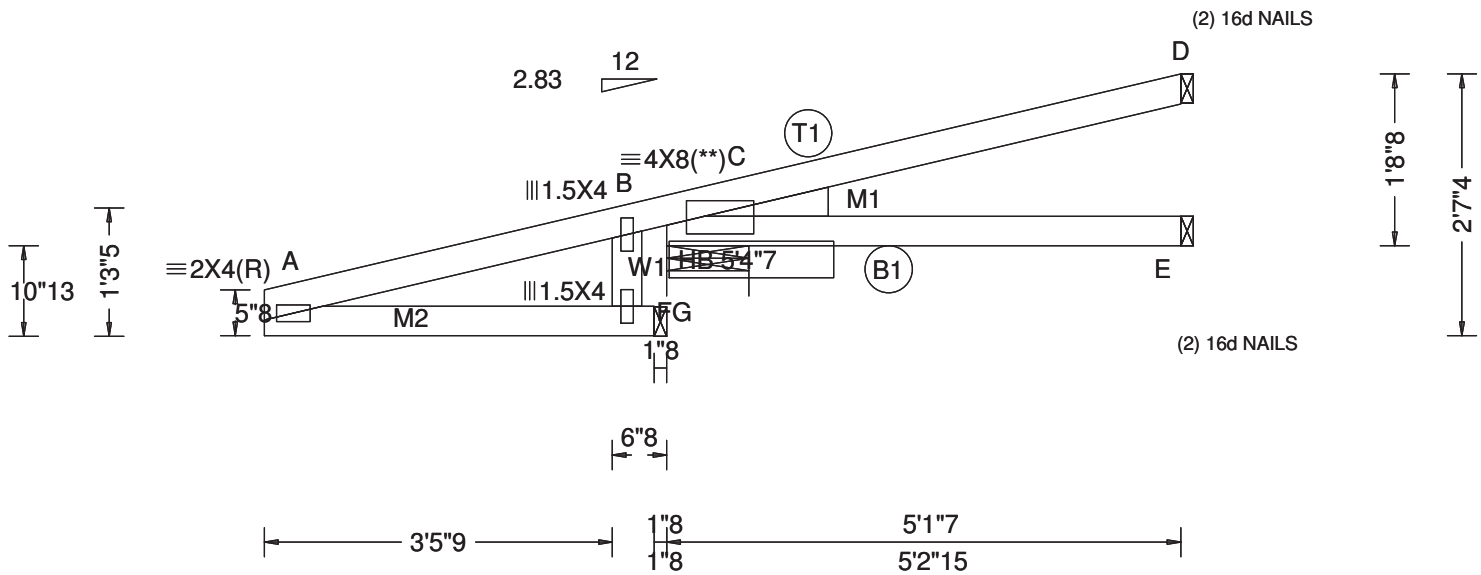

Loading Criteria (psf)

TCLL:	30.00
TCDL:	15.00
BCLL:	0.00
BCDL:	10.00
Des Ld:	55.00
NCBCLL:	10.00
Soffit:	2.00

Load Duration: 1.25
Spacing: 24.0 "

Wind Criteria
Wind Std: ASCE 7-22
Speed: 175 mph
Enclosure: Closed
Risk Category: II
EXP: C Kzt: NA
Mean Height: 15.00 ft
TCDL: 6.0 psf
BCDL: 6.0 psf
MWFRS Parallel Dist: 0 to h/2
C&C Dist a: 3.00 ft
Loc. from endwall: not in 9.00 ft
GCpi: 0.18
Wind Duration: 1.60

Snow Criteria (Pg,Pf in PSF)
Pg: NA Ct: NA CAT: NA
Pf: NA Ce: NA
Lu: NA Cs: NA
Snow Duration: NA

Building Code:
FBC 8th Ed. 2023 Res. HVHZ
TPI Std: 2014
Rep Fac: Varies by Ld Case
FT/RT:20(0)/10(0)
Plate Type(s):
WAVE

Defl/CSI Criteria

PP Deflection in	loc	L/defl	L/#
VERT(LL): -0.028	C	999	360
VERT(CL): 0.035	C	999	240
HORZ(LL): -0.009	C	-	-
HORZ(TL): 0.011	C	-	-

Creep Factor: 2.0
Max TC CSI: 0.473
Max BC CSI: 0.199
Max Web CSI: 0.020
Mfg Specified Camber:

VIEW Ver: 23.02.01A.1204.18

▲ Maximum Reactions (lbs)

Loc	Gravity R+	Gravity / R-	Non-Gravity / Rh	Non-Gravity / Rw	Non-Gravity / U	Non-Gravity / RL
G	-	/-	/191	/-	/-	/43
B	336	/-	/191	/-	/263	/43
E	82	/-	/-	/-	/20	/-
D	208	/-	/-	/-	/96	/-

Wind reactions based on MWFRS
G Brg Wid = 1.5 Min Req = -
B Brg Wid = 9.8 Min Req = 1.5 (Truss)
E Brg Wid = 1.5 Min Req = -
D Brg Wid = 1.5 Min Req = -
Bearing B is a rigid surface.

Maximum Top Chord Forces Per Ply (lbs)

Chords	Tens.	Comp.	Chords	Tens.	Comp.
A - B	211	- 61	C - D	48	- 22
B - C	232	- 64			

Maximum Bot Chord Forces Per Ply (lbs)

Chords	Tens.	Comp.
C - E	0	0

Maximum Web Forces Per Ply (lbs)

Webs	Tens.	Comp.	Webs	Tens.	Comp.
A - F	45	- 184	F - G	43	- 191
B - F	21	0			

Lumber
Top chord: 2x4 SP #2;
Bot chord: 2x4 SP #2;
Webs: 2x4 SP #2;
Lt Wedge: 2x4 SP #2;Lt Level Return: 2x4 SP #2;

Special Loads
------(Lumber Dur.Fac.=1.25 / Plate Dur.Fac.=1.25)

TC: From	1 plf at	-4.08 to	90 plf at	0.00
TC: From	2 plf at	0.00 to	2 plf at	5.12
BC: From	2 plf at	0.00 to	2 plf at	5.12
PLB: From	4 plf at	-3.97 to	4 plf at	-0.17

TC: -27 lb Conc. Load at 1.41
TC: 191 lb Conc. Load at 4.24
BC: 7 lb Conc. Load at 1.41
BC: 91 lb Conc. Load at 4.24

Plating Notes
(**) 1 plate(s) require special positioning. Refer to scaled plate plot details for special positioning requirements.

Wind
Wind loads and reactions based on MWFRS.
Left end vertical not exposed to wind pressure.
Wind loading based on both gable and hip roof types.

Additional Notes
***** BEARING ANALOG MODIFIED! *****

****WARNING**** READ AND FOLLOW ALL NOTES ON THIS DRAWING!
****IMPORTANT**** FURNISH THIS DRAWING TO ALL CONTRACTORS INCLUDING THE INSTALLERS
Trusses require extreme care in fabricating, handling, shipping, installing and bracing. Refer to and follow the latest edition of BCSI (Building Component Safety Information, by TPI and SBCA) for safety practices prior to performing these functions. Installers shall provide temporary bracing per BCSI. Unless noted otherwise, top chord shall have properly attached structural sheathing and bottom chord shall have a properly attached rigid ceiling. Locations shown for permanent lateral restraint of webs shall have continuous lateral restraint (CLR), installed with diagonal bracing installed on the CLR per BCSI sections B3, B7, or B10, as applicable. Apply plates to each face of truss and position as shown above and on the Joint Details, unless noted otherwise. Refer to drawings 160A-Z for standard plate positions. Refer to job's General Notes page for additional information.
Alpine, a division of ITW Building Components Group Inc. shall not be responsible for any deviation from this drawing, any failure to build the truss in conformance with ANSI/TPI 1, or for handling, shipping, installation and bracing of trusses. A seal on this drawing or cover page listing this drawing, indicates acceptance of professional engineering responsibility solely for the design shown. The suitability and use of this drawing for any structure is the responsibility of the Building Designer per ANSI/TPI 1 Sec.2.
For more information see these web sites: Alpine: alpineitw.com; TPI: tpinst.org; SBCA: sbcacomponents.com; ICC: iccsafe.org; AWC: awc.org

SEQN: 204013 / T113 / HIP_ FROM:	Ply: 1 Qty: 4 Wgt: 32.2 lbs	**Job Number:** 24070306 7725 RES. **Truss Label:** CJ3	DRW: ... / ... 07/24/2024

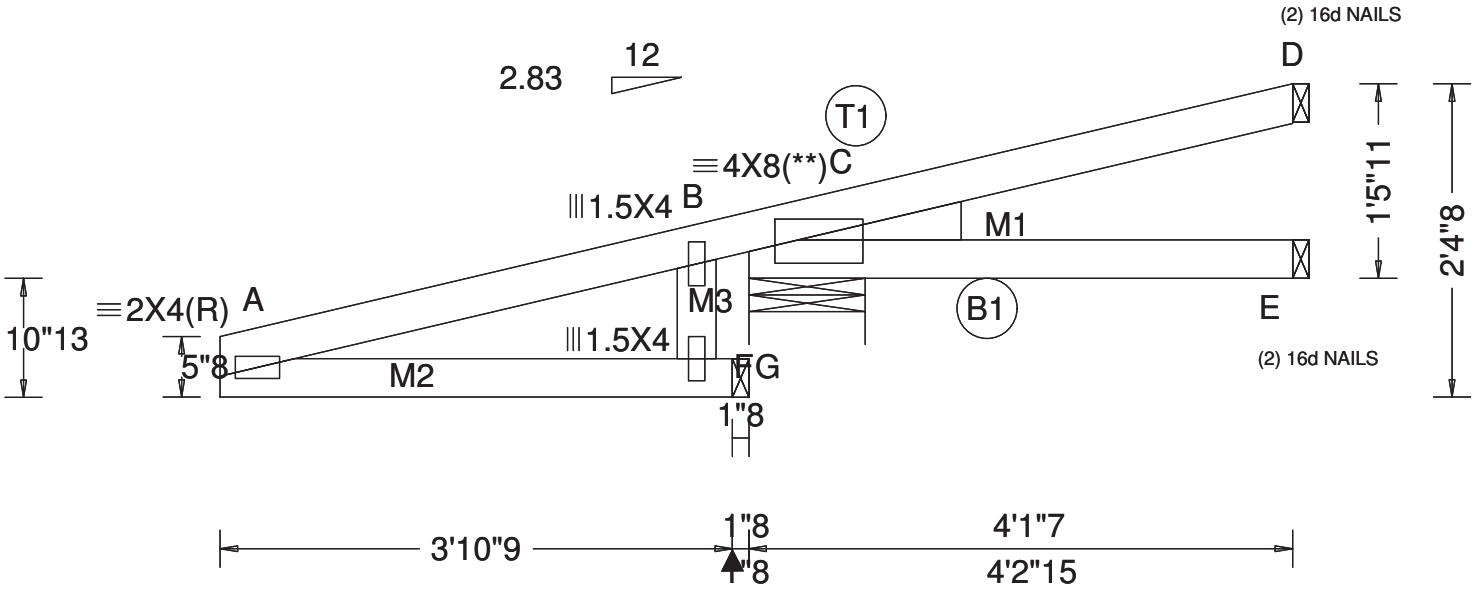

Loading Criteria (psf)

TCLL:	30.00
TCDL:	15.00
BCLL:	0.00
BCDL:	10.00
Des Ld:	55.00
NCBCLL:	10.00
Soffit:	2.00

Load Duration: 1.25
Spacing: 24.0 "

Wind Criteria
Wind Std: ASCE 7-22
Speed: 175 mph
Enclosure: Closed
Risk Category: II
EXP: C Kzt: NA
Mean Height: 15.00 ft
TCDL: 6.0 psf
BCDL: 6.0 psf
MWFRS Parallel Dist: 0 to h/2
C&C Dist a: 3.00 ft
Loc. from endwall: not in 4.50 ft
GCpi: 0.18
Wind Duration: 1.60

Snow Criteria (Pg,Pf in PSF)
Pg: NA Ct: NA CAT: NA
Pf: NA Ce: NA
Lu: NA Cs: NA
Snow Duration: NA

Building Code:
FBC 8th Ed. 2023 Res. HVHZ
TPI Std: 2014
Rep Fac: Varies by Ld Case
FT/RT:20(0)/10(0)
Plate Type(s):
WAVE

Defl/CSI Criteria
PP Deflection in loc L/defl L/#
VERT(LL): NA
VERT(CL): NA
HORZ(LL): -0.002 C - -
HORZ(TL): 0.005 C - -
Creep Factor: 2.0
Max TC CSI: 0.198
Max BC CSI: 0.113
Max Web CSI: 0.000
Mfg Specified Camber:

VIEW Ver: 23.02.01A.1204.18

▲ Maximum Reactions (lbs)

	Gravity			Non-Gravity		
Loc	R+	/ R-	/ Rh	/ Rw	/ U	/ RL
G	-	/-	/207	/-	/-	/76
B	300	/-	/207	/-	/184	/76
E	62	/-3	/-	/-	/8	/-
D	53	/-1	/-	/-	/8	/-

Wind reactions based on MWFRS
G Brg Wid = 1.5 Min Req = -
B Brg Wid = 10.6 Min Req = 1.5 (Truss)
E Brg Wid = 1.5 Min Req = -
D Brg Wid = 1.5 Min Req = -
Bearing B is a rigid surface.

Maximum Top Chord Forces Per Ply (lbs)

Chords	Tens.	Comp.	Chords	Tens.	Comp.
A - B	223	- 87	C - D	12	- 6
B - C	247	- 95			

Maximum Bot Chord Forces Per Ply (lbs)

Chords	Tens.	Comp.
C - E	0	0

Maximum Web Forces Per Ply (lbs)

Webs	Tens.	Comp.	Webs	Tens.	Comp.
A - F	73	- 198	F - G	76	- 207
B - F	23	- 2			

Lumber
Top chord: 2x4 SP #2;
Bot chord: 2x4 SP #2;
Lt Wedge: 2x4 SP #2;Lt Level Return: 2x4 SP #2;

Special Loads
------(Lumber Dur.Fac.=1.25 / Plate Dur.Fac.=1.25)

TC: From	1 plf at	-4.07 to	90 plf at	0.00
TC: From	2 plf at	0.00 to	2 plf at	4.12
BC: From	2 plf at	0.00 to	2 plf at	4.12
PLB: From	4 plf at	-3.97 to	4 plf at	-0.17

TC: 22 lb Conc. Load at 1.41
BC: 20 lb Conc. Load at 1.41

Plating Notes
(**) 1 plate(s) require special positioning. Refer to scaled plate plot details for special positioning requirements.

Wind
Wind loads and reactions based on MWFRS.
Wind loading based on both gable and hip roof types.

Additional Notes
The maximum horizontal reaction is 207#
***** BEARING ANALOG MODIFIED! *****

****WARNING**** READ AND FOLLOW ALL NOTES ON THIS DRAWING!
****IMPORTANT**** FURNISH THIS DRAWING TO ALL CONTRACTORS INCLUDING THE INSTALLERS
Trusses require extreme care in fabricating, handling, shipping, installing and bracing. Refer to and follow the latest edition of BCSI (Building Component Safety Information, by TPI and SBCA) for safety practices prior to performing these functions. Installers shall provide temporary bracing per BCSI. Unless noted otherwise, top chord shall have properly attached structural sheathing and bottom chord shall have a properly attached rigid ceiling. Locations shown for permanent lateral restraint of webs shall have continuous lateral restraint (CLR), installed with diagonal bracing installed on the CLR per BCSI sections B3, B7, or B10, as applicable. Apply plates to each face of truss and position as shown above and on the Joint Details, unless noted otherwise. Refer to drawings 160A-Z for standard plate positions. Refer to job's General Notes page for additional information.
Alpine, a division of ITW Building Components Group Inc. shall not be responsible for any deviation from this drawing, any failure to build the truss in conformance with ANSI/TPI 1, or for handling, shipping, installation and bracing of trusses. A seal on this drawing or cover page listing this drawing, indicates acceptance of professional engineering responsibility solely for the design shown. The suitability and use of this drawing for any structure is the responsibility of the Building Designer per ANSI/TPI 1 Sec.2.
For more information see these web sites: Alpine: alpineitw.com; TPI: tpinst.org; SBCA: sbcacomponents.com; ICC: iccsafe.org; AWC: awc.org

SEQN: 203777 / T22 / EJAC FROM:	Ply: 1 Qty: 15 Wgt: 33.6 lbs	**Job Number:** 24070306 7725 RES. **Truss Label:** J7	DRW: ... / ... 07/18/2024

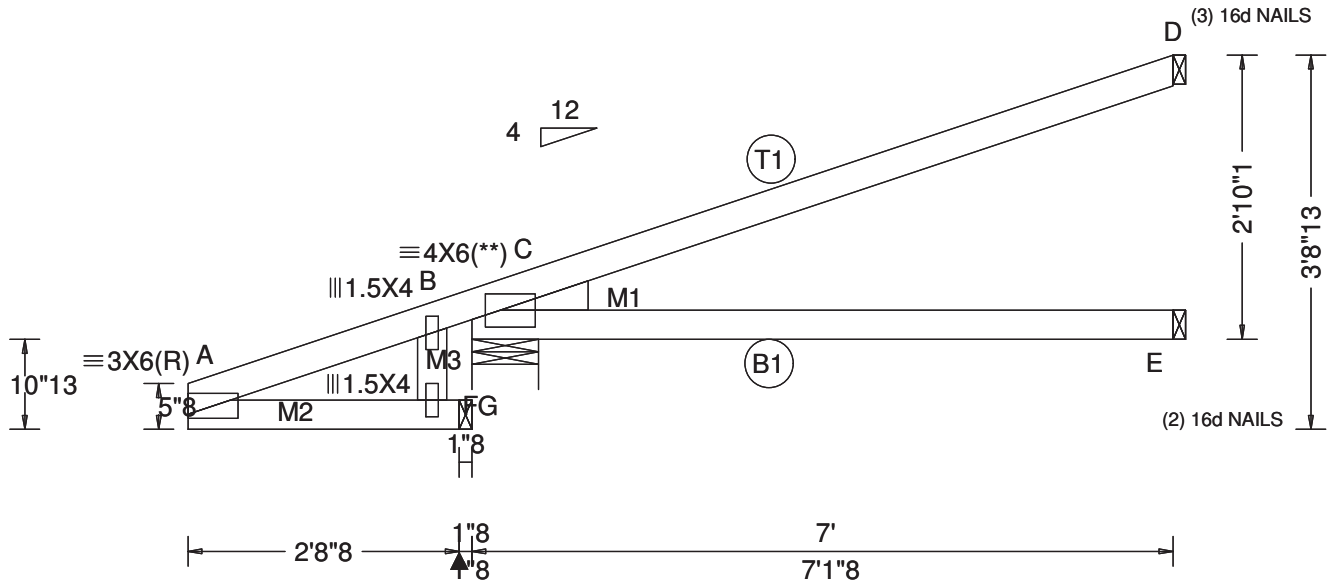

Loading Criteria (psf)

TCLL:	30.00
TCDL:	15.00
BCLL:	0.00
BCDL:	10.00
Des Ld:	55.00
NCBCLL:	10.00
Soffit:	2.00

Load Duration: 1.25
Spacing: 24.0 "

Wind Criteria
Wind Std: ASCE 7-22
Speed: 175 mph
Enclosure: Closed
Risk Category: II
EXP: C Kzt: NA
Mean Height: 15.00 ft
TCDL: 6.0 psf
BCDL: 6.0 psf
MWFRS Parallel Dist: h/2 to h
C&C Dist a: 3.00 ft
Loc. from endwall: not in 9.00 ft
GCpi: 0.18
Wind Duration: 1.60

Snow Criteria (Pg,Pf in PSF)
Pg: NA Ct: NA CAT: NA
Pf: NA Ce: NA
Lu: NA Cs: NA
Snow Duration: NA

Building Code:
FBC 8th Ed. 2023 Res. HVHZ
TPI Std: 2014
Rep Fac: Yes
FT/RT:20(0)/10(0)
Plate Type(s):
WAVE

Defl/CSI Criteria
PP Deflection in loc L/defl L/#
VERT(LL): NA
VERT(CL): NA
HORZ(LL): -0.031 C - -
HORZ(TL): 0.049 C - -
Creep Factor: 2.0
Max TC CSI: 0.929
Max BC CSI: 0.451
Max Web CSI: 0.000
Mfg Specified Camber:

VIEW Ver: 23.02.01A.1204.18

▲ Maximum Reactions (lbs)

	Gravity			Non-Gravity		
Loc	R+	/ R-	/ Rh	/ Rw	/ U	/ RL
G	-	/-	/177	/-	/-	/323
B	693	/-	/177	/486	/833	/362
E	118	/-	/-	/75	/13	/-
D	249	/-	/-	/154	/360	/-

Wind reactions based on C&C
G Brg Wid = 1.5 Min Req = -
B Brg Wid = 8.0 Min Req = 1.5 (Truss)
E Brg Wid = 1.5 Min Req = -
D Brg Wid = 1.5 Min Req = -
Bearing B is a rigid surface.

Maximum Top Chord Forces Per Ply (lbs)

Chords	Tens.	Comp.	Chords	Tens.	Comp.
A - B	227	- 294	C - D	79	- 137
B - C	247	- 288			

Maximum Bot Chord Forces Per Ply (lbs)

Chords	Tens.	Comp.
C - E	0	0

Maximum Web Forces Per Ply (lbs)

Webs	Tens.	Comp.	Webs	Tens.	Comp.
A - F	328	- 209	F - G	323	- 213
B - F	45	- 16			

Lumber
Top chord: 2x4 SP #2;
Bot chord: 2x4 SP #2;
Lt Wedge: 2x4 SP #2;Lt Level Return: 2x4 SP #2;

Plating Notes
(**) 1 plate(s) require special positioning. Refer to scaled plate plot details for special positioning requirements.

Wind
Member design based on both MWFRS and C&C.
Wind loading based on both gable and hip roof types.

Additional Notes
***** BEARING ANALOG MODIFIED! *****

****WARNING**** READ AND FOLLOW ALL NOTES ON THIS DRAWING!
****IMPORTANT**** FURNISH THIS DRAWING TO ALL CONTRACTORS INCLUDING THE INSTALLERS
Trusses require extreme care in fabricating, handling, shipping, installing and bracing. Refer to and follow the latest edition of BCSI (Building Component Safety Information, by TPI and SBCA) for safety practices prior to performing these functions. Installers shall provide temporary bracing per BCSI. Unless noted otherwise, top chord shall have properly attached structural sheathing and bottom chord shall have a properly attached rigid ceiling. Locations shown for permanent lateral restraint of webs shall have continuous lateral restraint (CLR), installed with diagonal bracing installed on the CLR per BCSI sections B3, B7, or B10, as applicable. Apply plates to each face of truss and position as shown above and on the Joint Details, unless noted otherwise. Refer to drawings 160A-Z for standard plate positions. Refer to job's General Notes page for additional information.
Alpine, a division of ITW Building Components Group Inc. shall not be responsible for any deviation from this drawing, any failure to build the truss in conformance with ANSI/TPI 1, or for handling, shipping, installation and bracing of trusses. A seal on this drawing or cover page listing this drawing, indicates acceptance of professional engineering responsibility solely for the design shown. The suitability and use of this drawing for any structure is the responsibility of the Building Designer per ANSI/TPI 1 Sec.2.
For more information see these web sites: Alpine: alpineitw.com; TPI: tpinst.org; SBCA: sbcacomponents.com; ICC: iccsafe.org; AWC: awc.org

SEQN: 203734 / T139 / EJAC FROM:	Ply: 1 Qty: 4 Wgt: 39.2 lbs	**Job Number:** 24070306 7725 RES. **Truss Label:** J7BP	DRW: ... / ... 07/24/2024

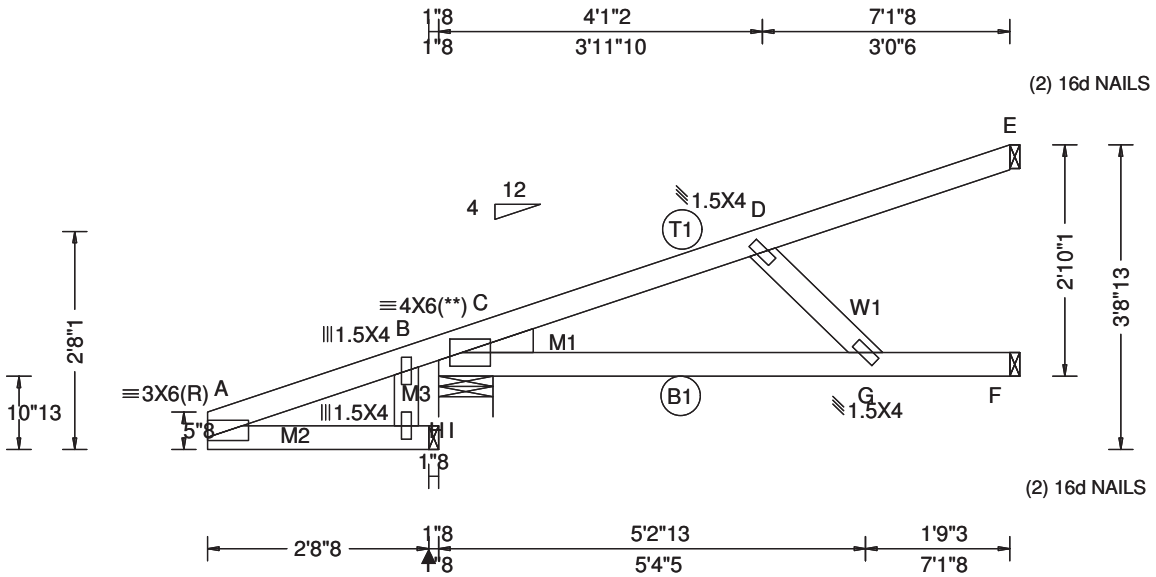

Loading Criteria (psf)		**Wind Criteria**	**Snow Criteria** (Pg,Pf in PSF)	**Defl/CSI Criteria**
TCLL:	30.00	Wind Std: ASCE 7-22	Pg: NA Ct: NA CAT: NA	PP Deflection in loc L/defl L/#
TCDL:	15.00	Speed: 175 mph	Pf: NA Ce: NA	VERT(LL): -0.138 G 595 360
BCLL:	0.00	Enclosure: Part. Enc.	Lu: NA Cs: NA	VERT(CL): 0.193 G 425 240
BCDL:	10.00	Risk Category: II	Snow Duration: NA	HORZ(LL): -0.040 D - -
Des Ld:	55.00	EXP: C Kzt: NA	Building Code:	HORZ(TL): 0.055 D - -
NCBCLL:	10.00	Mean Height: 15.00 ft	FBC 8th Ed. 2023 Res. HVHZ	Creep Factor: 2.0
Soffit:	2.00	TCDL: 6.0 psf	TPI Std: 2014	Max TC CSI: 0.486
Load Duration: 1.25		BCDL: 6.0 psf	Rep Fac: Yes	Max BC CSI: 0.643
Spacing: 24.0 "		MWFRS Parallel Dist: h/2 to h	FT/RT:20(0)/10(0)	Max Web CSI: 0.187
		C&C Dist a: 3.00 ft	Plate Type(s):	Mfg Specified Camber:
		Loc. from endwall: not in 9.00 ft	WAVE	VIEW Ver: 23.02.01A.1204.18
		GCpi: 0.55		
		Wind Duration: 1.60		

▲ Maximum Reactions (lbs)

Loc	Gravity R+	Gravity / R-	/ Rh	Non-Gravity / Rw	/ U	/ RL
I	-	/-	/204	/-	/-	/465
B	680	/-	/204	/570	/899	/303
F	192	/-	/0	/173	/222	/0
E	155	/-	/-	/128	/258	/-

Wind reactions based on C&C

I	Brg Wid = 1.5	Min Req =	-
B	Brg Wid = 8.0	Min Req =	1.5 (Truss)
F	Brg Wid = 1.5	Min Req =	-
E	Brg Wid = 1.5	Min Req =	-

Bearing B is a rigid surface.

Maximum Top Chord Forces Per Ply (lbs)

Chords	Tens.	Comp.	Chords	Tens.	Comp.
A - B	250	- 412	C - D	138	- 260
B - C	273	- 423	D - E	49	- 94

Maximum Bot Chord Forces Per Ply (lbs)

Chords	Tens.	Comp.	Chords	Tens.	Comp.
C - G	210	- 364	G - F	0	0

Maximum Web Forces Per Ply (lbs)

Webs	Tens.	Comp.	Webs	Tens.	Comp.
A - H	458	- 241	H - I	465	- 247
B - H	45	- 30	D - G	511	- 279

Lumber

Top chord: 2x4 SP #2;
Bot chord: 2x4 SP #2;
Webs: 2x4 SP #2;
Lt Wedge: 2x4 SP #2;Lt Level Return: 2x4 SP #2;

Plating Notes

(**) 1 plate(s) require special positioning. Refer to scaled plate plot details for special positioning requirements.

Wind

Member design based on both MWFRS and C&C.

Wind loading based on both gable and hip roof types.

Additional Notes

The maximum horizontal reaction is 204#

***** BEARING ANALOG MODIFIED! *****

****WARNING**** READ AND FOLLOW ALL NOTES ON THIS DRAWING!
****IMPORTANT**** FURNISH THIS DRAWING TO ALL CONTRACTORS INCLUDING THE INSTALLERS
Trusses require extreme care in fabricating, handling, shipping, installing and bracing. Refer to and follow the latest edition of BCSI (Building Component Safety Information, by TPI and SBCA) for safety practices prior to performing these functions. Installers shall provide temporary bracing per BCSI. Unless noted otherwise, top chord shall have properly attached structural sheathing and bottom chord shall have a properly attached rigid ceiling. Locations shown for permanent lateral restraint of webs shall have continuous lateral restraint (CLR), installed with diagonal bracing installed on the CLR per BCSI sections B3, B7, or B10, as applicable. Apply plates to each face of truss and position as shown above and on the Joint Details, unless noted otherwise. Refer to drawings 160A-Z for standard plate positions. Refer to job's General Notes page for additional information.
Alpine, a division of ITW Building Components Group Inc. shall not be responsible for any deviation from this drawing, any failure to build the truss in conformance with ANSI/TPI 1, or for handling, shipping, installation and bracing of trusses. A seal on this drawing or cover page listing this drawing, indicates acceptance of professional engineering responsibility solely for the design shown. The suitability and use of this drawing for any structure is the responsibility of the Building Designer per ANSI/TPI 1 Sec.2.
For more information see these web sites: Alpine: alpineitw.com; TPI: tpinst.org; SBCA: sbcacomponents.com; ICC: iccsafe.org; AWC: awc.org

SEQN: 206649 / T66 / EJAC FROM:	Ply: 1 Qty: 3 Wgt: 42.0 lbs	**Job Number:** 24070306 7725 RES. **Truss Label:** J7B	DRW: ... / ... 07/24/2024

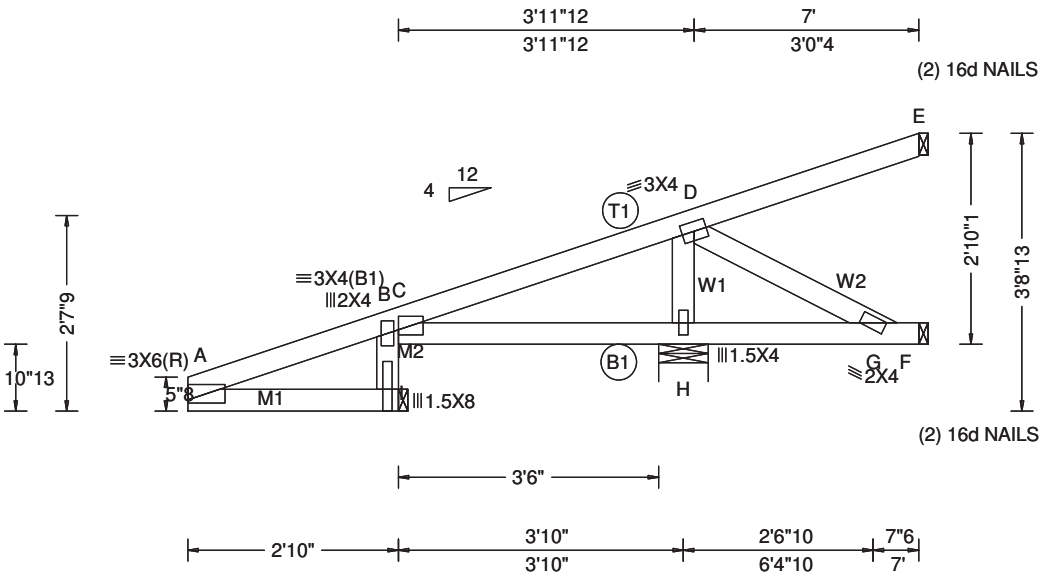

Loading Criteria (psf)

TCLL:	30.00
TCDL:	15.00
BCLL:	0.00
BCDL:	10.00
Des Ld:	55.00
NCBCLL:	10.00
Soffit:	2.00

Load Duration: 1.25
Spacing: 24.0 "

Wind Criteria
Wind Std: ASCE 7-22
Speed: 175 mph
Enclosure: Closed
Risk Category: II
EXP: C Kzt: NA
Mean Height: 15.00 ft
TCDL: 6.0 psf
BCDL: 6.0 psf
MWFRS Parallel Dist: h to 2h
C&C Dist a: 3.00 ft
Loc. from endwall: not in 9.00 ft
GCpi: 0.18
Wind Duration: 1.60

Snow Criteria (Pg,Pf in PSF)
Pg: NA Ct: NA CAT: NA
Pf: NA Ce: NA
Lu: NA Cs: NA
Snow Duration: NA

Building Code:
FBC 8th Ed. 2023 Res. HVHZ
TPI Std: 2014
Rep Fac: Yes
FT/RT:20(0)/10(0)
Plate Type(s):
WAVE

Defl/CSI Criteria

PP Deflection in	loc	L/defl	L/#
VERT(LL): -0.002	C	999	360
VERT(CL): 0.003	C	999	240
HORZ(LL): -0.001	C	-	-
HORZ(TL): 0.002	C	-	-

Creep Factor: 2.0
Max TC CSI: 0.302
Max BC CSI: 0.117
Max Web CSI: 0.087
Mfg Specified Camber:

VIEW Ver: 23.02.01A.1204.18

▲ Maximum Reactions (lbs)

	Gravity			Non-Gravity		
Loc	R+	/ R-	/ Rh	/ Rw	/ U	/ RL
I	442	/-	/179	/467	/763	/661
H	483	/-	/150	/322	/455	/365
F	22	/0	/39	/40	/34	/98
E	114	/-	/-	/60	/153	/-

Wind reactions based on C&C
I Brg Wid = 1.5 Min Req = -
H Brg Wid = 8.0 Min Req = 1.5 (Truss)
F Brg Wid = 1.5 Min Req = -
E Brg Wid = 1.5 Min Req = -
Bearing H is a rigid surface.

Maximum Top Chord Forces Per Ply (lbs)

Chords	Tens.	Comp.	Chords	Tens.	Comp.
A - B	423	- 595	C - D	126	- 214
B - C	404	- 506	D - E	36	- 72

Maximum Bot Chord Forces Per Ply (lbs)

Chords	Tens.	Comp.	Chords	Tens.	Comp.
C - H	340	- 344	G - F	98	- 45
H - G	11	- 24			

Maximum Web Forces Per Ply (lbs)

Webs	Tens.	Comp.	Webs	Tens.	Comp.
A - I	627	- 410	H - D	496	- 405
B - I	625	- 419	D - G	142	- 65

Lumber
Top chord: 2x4 SP #2;
Bot chord: 2x4 SP #2;
Webs: 2x4 SP #2;
Lt Level Return: 2x4 SP #2;

Wind
Member design based on both MWFRS and C&C.
Wind loading based on both gable and hip roof types.

Additional Notes
***** BEARING ANALOG MODIFIED! *****

****WARNING**** READ AND FOLLOW ALL NOTES ON THIS DRAWING!
****IMPORTANT**** FURNISH THIS DRAWING TO ALL CONTRACTORS INCLUDING THE INSTALLERS
Trusses require extreme care in fabricating, handling, shipping, installing and bracing. Refer to and follow the latest edition of BCSI (Building Component Safety Information, by TPI and SBCA) for safety practices prior to performing these functions. Installers shall provide temporary bracing per BCSI. Unless noted otherwise, top chord shall have properly attached structural sheathing and bottom chord shall have a properly attached rigid ceiling. Locations shown for permanent lateral restraint of webs shall have continuous lateral restraint (CLR), installed with diagonal bracing installed on the CLR per BCSI sections B3, B7, or B10, as applicable. Apply plates to each face of truss and position as shown above and on the Joint Details, unless noted otherwise. Refer to drawings 160A-Z for standard plate positions. Refer to job's General Notes page for additional information.
Alpine, a division of ITW Building Components Group Inc. shall not be responsible for any deviation from this drawing, any failure to build the truss in conformance with ANSI/TPI 1, or for handling, shipping, installation and bracing of trusses. A seal on this drawing or cover page listing this drawing, indicates acceptance of professional engineering responsibility solely for the design shown. The suitability and use of this drawing for any structure is the responsibility of the Building Designer per ANSI/TPI 1 Sec.2.
For more information see these web sites: Alpine: alpineitw.com; TPI: tpinst.org; SBCA: sbcacomponents.com; ICC: iccsafe.org; AWC: awc.org

SEQN: 203709 / T128 / EJAC FROM:	Ply: 1 Qty: 27 Wgt: 33.6 lbs	**Job Number:** 24070306 7725 RES. **Truss Label:** J7P	DRW: ... / ... 07/18/2024

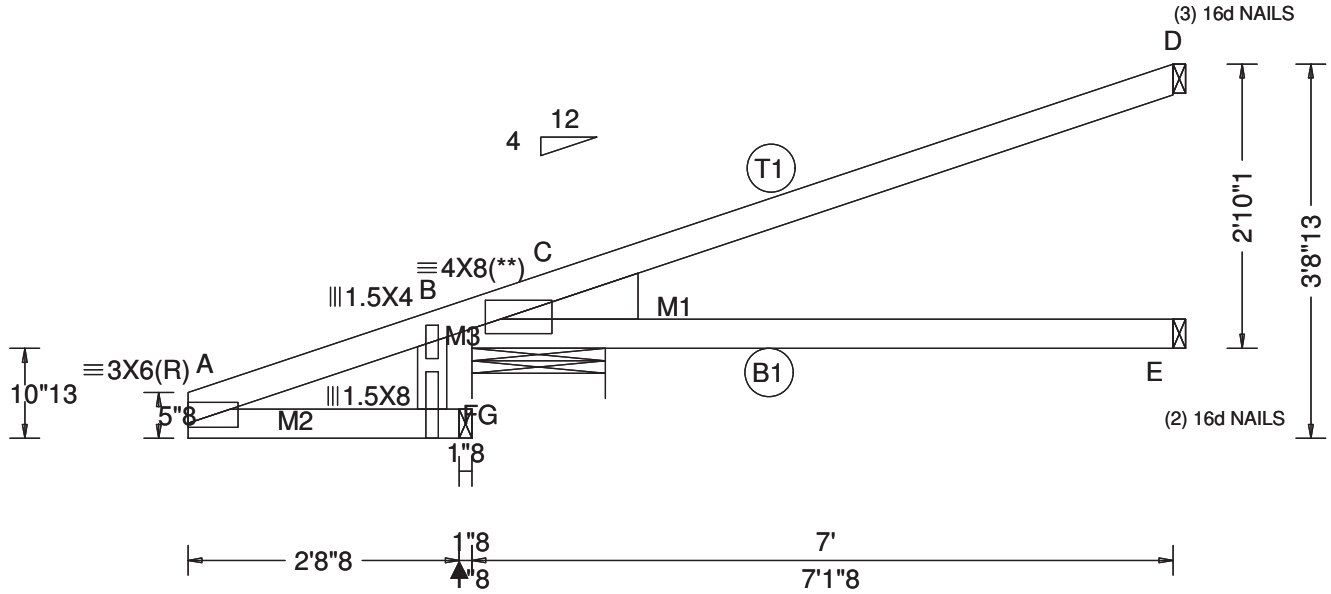

Loading Criteria (psf)

TCLL:	30.00
TCDL:	15.00
BCLL:	0.00
BCDL:	10.00
Des Ld:	55.00
NCBCLL:	10.00
Soffit:	2.00

Load Duration: 1.25
Spacing: 24.0 "

Wind Criteria
Wind Std: ASCE 7-22
Speed: 175 mph
Enclosure: Part. Enc.
Risk Category: II
EXP: C Kzt: NA
Mean Height: 21.70 ft
TCDL: 6.0 psf
BCDL: 6.0 psf
MWFRS Parallel Dist: 0 to h/2
C&C Dist a: 3.00 ft
Loc. from endwall: not in 9.00 ft
GCpi: 0.55
Wind Duration: 1.60

Snow Criteria (Pg,Pf in PSF)
Pg: NA Ct: NA CAT: NA
Pf: NA Ce: NA
Lu: NA Cs: NA
Snow Duration: NA

Building Code:
FBC 8th Ed. 2023 Res. HVHZ
TPI Std: 2014
Rep Fac: Yes
FT/RT:20(0)/10(0)
Plate Type(s):
WAVE

Defl/CSI Criteria
PP Deflection in loc L/defl L/#
VERT(LL): NA
VERT(CL): NA
HORZ(LL): 0.005 C - -
HORZ(TL): 0.005 C - -
Creep Factor: 2.0
Max TC CSI: 0.940
Max BC CSI: 0.580
Max Web CSI: 0.000
Mfg Specified Camber:

VIEW Ver: 23.02.01A.1204.18

▲ Maximum Reactions (lbs)

	Gravity			Non-Gravity		
Loc	R+	/ R-	/ Rh	/ Rw	/ U	/ RL
G	-	/-	/262	/-	/-	/868
B	738	/-	/-	/834	/1522	/-
E	93	/-	/180	/246	/230	/390
D	230	/-	/107	/166	/356	/240

Wind reactions based on C&C
G Brg Wid = 1.5 Min Req = -
B Brg Wid = 16.0 Min Req = 1.5 (Truss)
E Brg Wid = 1.5 Min Req = -
D Brg Wid = 1.5 Min Req = -
Bearing B is a rigid surface.

Maximum Top Chord Forces Per Ply (lbs)

Chords	Tens.	Comp.	Chords	Tens.	Comp.
A - B	534	- 814	C - D	239	- 202
B - C	610	- 894			

Maximum Bot Chord Forces Per Ply (lbs)

Chords	Tens.	Comp.
C - E	354	- 390

Maximum Web Forces Per Ply (lbs)

Webs	Tens.	Comp.	Webs	Tens.	Comp.
A - F	866	- 531	F - G	868	- 523
B - F	208	- 227			

Lumber
Top chord: 2x4 SP #2;
Bot chord: 2x4 SP #2;
Lt Wedge: 2x6 SP #2;Lt Level Return: 2x4 SP #2;

Plating Notes
(**) 1 plate(s) require special positioning. Refer to scaled plate plot details for special positioning requirements.

Wind
Member design based on both MWFRS and C&C.
Wind loading based on both gable and hip roof types.
Left bottom chord exposed to wind.

Additional Notes
The maximum horizontal reaction is 262#
***** BEARING ANALOG MODIFIED! *****

****WARNING**** READ AND FOLLOW ALL NOTES ON THIS DRAWING!
****IMPORTANT**** FURNISH THIS DRAWING TO ALL CONTRACTORS INCLUDING THE INSTALLERS

Trusses require extreme care in fabricating, handling, shipping, installing and bracing. Refer to and follow the latest edition of BCSI (Building Component Safety Information, by TPI and SBCA) for safety practices prior to performing these functions. Installers shall provide temporary bracing per BCSI. Unless noted otherwise, top chord shall have properly attached structural sheathing and bottom chord shall have a properly attached rigid ceiling. Locations shown for permanent lateral restraint of webs shall have continuous lateral restraint (CLR), installed with diagonal bracing installed on the CLR per BCSI sections B3, B7, or B10, as applicable. Apply plates to each face of truss and position as shown above and on the Joint Details, unless noted otherwise. Refer to drawings 160A-Z for standard plate positions. Refer to job's General Notes page for additional information.
Alpine, a division of ITW Building Components Group Inc. shall not be responsible for any deviation from this drawing, any failure to build the truss in conformance with ANSI/TPI 1, or for handling, shipping, installation and bracing of trusses. A seal on this drawing or cover page listing this drawing, indicates acceptance of professional engineering responsibility solely for the design shown. The suitability and use of this drawing for any structure is the responsibility of the Building Designer per ANSI/TPI 1 Sec.2.
For more information see these web sites: Alpine: alpineitw.com; TPI: tpinst.org; SBCA: sbcacomponents.com; ICC: iccsafe.org; AWC: awc.org

SEQN: 203715 / T136 / EJAC FROM:	Ply: 1 Qty: 3 Wgt: 33.6 lbs	**Job Number:** 24070306 7725 RES. **Truss Label:** J7AP	DRW: ... / ... 07/18/2024

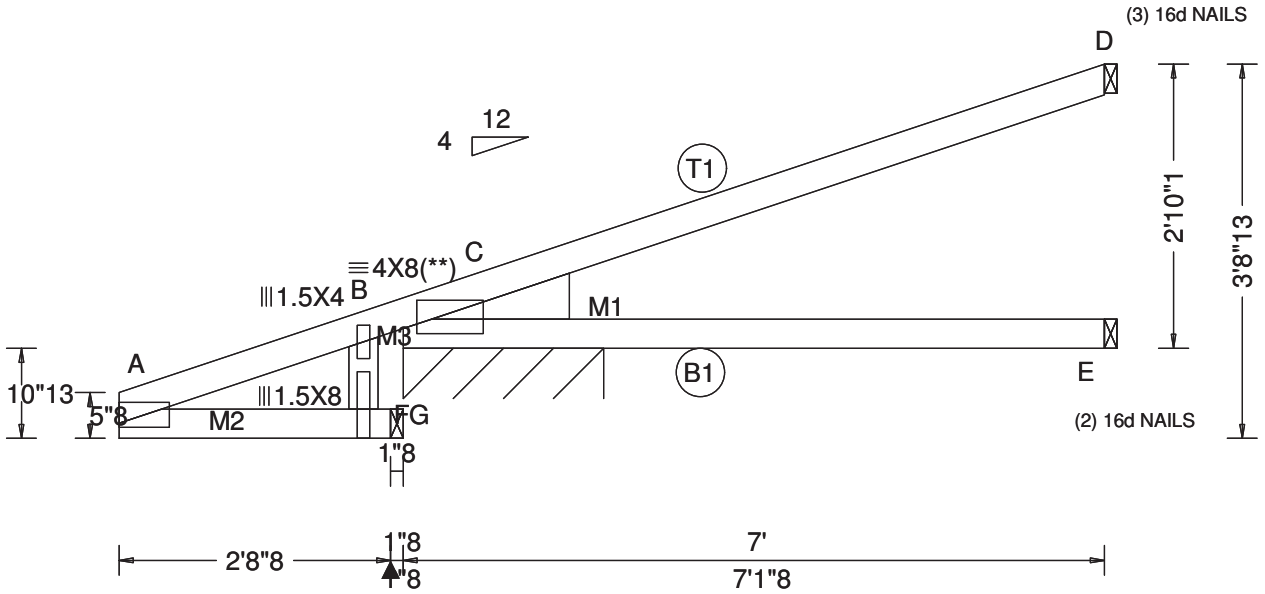

Loading Criteria (psf)

TCLL:	30.00
TCDL:	15.00
BCLL:	0.00
BCDL:	10.00
Des Ld:	55.00
NCBCLL:	10.00
Soffit:	2.00

Load Duration: 1.25
Spacing: 24.0 "

Wind Criteria
Wind Std: ASCE 7-22
Speed: 175 mph
Enclosure: Part. Enc.
Risk Category: II
EXP: C Kzt: NA
Mean Height: 21.70 ft
TCDL: 6.0 psf
BCDL: 6.0 psf
MWFRS Parallel Dist: 0 to h/2
C&C Dist a: 3.00 ft
Loc. from endwall: not in 9.00 ft
GCpi: 0.55
Wind Duration: 1.60

Snow Criteria (Pg,Pf in PSF)
Pg: NA Ct: NA CAT: NA
Pf: NA Ce: NA
Lu: NA Cs: NA
Snow Duration: NA

Building Code:
FBC 8th Ed. 2023 Res. HVHZ
TPI Std: 2014
Rep Fac: Yes
FT/RT:20(0)/10(0)
Plate Type(s):
WAVE

Defl/CSI Criteria

PP Deflection in	loc	L/defl	L/#
VERT(LL):	NA		
VERT(CL):	NA		
HORZ(LL):	-0.006 C	-	-
HORZ(TL):	0.006 C	-	-

Creep Factor: 2.0
Max TC CSI: 0.930
Max BC CSI: 0.481
Max Web CSI: 0.000
Mfg Specified Camber:

VIEW Ver: 23.02.01A.1204.18

▲ Maximum Reactions (lbs), or *=PLF

	Gravity			Non-Gravity		
Loc	R+	/ R-	/ Rh	/ Rw	/ U	/ RL
G	-	/-	/267	/-	/-	/898
B*	373	/-	/-	/401	/754	/-
E	80	/-	/152	/228	/207	/264
D	239	/-	/139	/174	/365	/411

Wind reactions based on C&C
G Brg Wid = 1.5 Min Req = -
B Brg Wid = 24.0 Min Req = -
E Brg Wid = 1.5 Min Req = -
D Brg Wid = 1.5 Min Req = -
Bearing B is a rigid surface.

Maximum Top Chord Forces Per Ply (lbs)

Chords	Tens.	Comp.	Chords	Tens.	Comp.
A - B	563	- 840	C - D	417	- 361
B - C	644	- 923			

Maximum Bot Chord Forces Per Ply (lbs)

Chords	Tens.	Comp.
C - E	437	- 528

Maximum Web Forces Per Ply (lbs)

Webs	Tens.	Comp.	Webs	Tens.	Comp.
A - F	894	- 563	F - G	898	- 558
B - F	211	- 229			

Lumber
Top chord: 2x4 SP #2;
Bot chord: 2x4 SP #2;
Lt Wedge: 2x6 SP #2;Lt Level Return: 2x4 SP #2;

Plating Notes
All plates are 3X6(R) except as noted.
(**) 1 plate(s) require special positioning. Refer to scaled plate plot details for special positioning requirements.

Wind
Member design based on both MWFRS and C&C.
Wind loading based on both gable and hip roof types.
Left bottom chord exposed to wind.

Additional Notes
The maximum horizontal reaction is 267#
***** BEARING ANALOG MODIFIED! *****

****WARNING**** READ AND FOLLOW ALL NOTES ON THIS DRAWING!
****IMPORTANT**** FURNISH THIS DRAWING TO ALL CONTRACTORS INCLUDING THE INSTALLERS

Trusses require extreme care in fabricating, handling, shipping, installing and bracing. Refer to and follow the latest edition of BCSI (Building Component Safety Information, by TPI and SBCA) for safety practices prior to performing these functions. Installers shall provide temporary bracing per BCSI. Unless noted otherwise, top chord shall have properly attached structural sheathing and bottom chord shall have a properly attached rigid ceiling. Locations shown for permanent lateral restraint of webs shall have continuous lateral restraint (CLR), installed with diagonal bracing installed on the CLR per BCSI sections B3, B7, or B10, as applicable. Apply plates to each face of truss and position as shown above and on the Joint Details, unless noted otherwise. Refer to drawings 160A-Z for standard plate positions. Refer to job's General Notes page for additional information.
Alpine, a division of ITW Building Components Group Inc. shall not be responsible for any deviation from this drawing, any failure to build the truss in conformance with ANSI/TPI 1, or for handling, shipping, installation and bracing of trusses. A seal on this drawing or cover page listing this drawing, indicates acceptance of professional engineering responsibility solely for the design shown. The suitability and use of this drawing for any structure is the responsibility of the Building Designer per ANSI/TPI 1 Sec.2.
For more information see these web sites: Alpine: alpineitw.com; TPI: tpinst.org; SBCA: sbcacomponents.com; ICC: iccsafe.org; AWC: awc.org

SEQN: 203878 / T44 / EJAC FROM:	Ply: 1 Qty: 4 Wgt: 39.2 lbs	**Job Number:** 24070306 7725 RES. **Truss Label:** J7G	DRW: ... / ... 07/18/2024

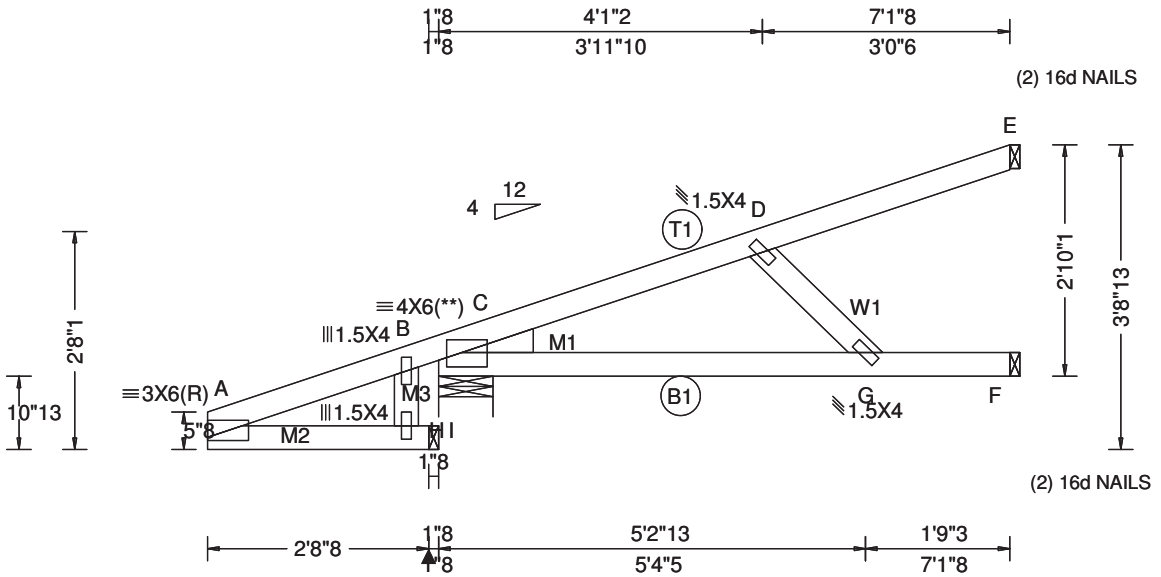

Loading Criteria (psf)

TCLL: 30.00
TCDL: 15.00
BCLL: 0.00
BCDL: 10.00
Des Ld: 55.00
NCBCLL: 10.00
Soffit: 2.00
Load Duration: 1.25
Spacing: 24.0 "

Wind Criteria

Wind Std: ASCE 7-22
Speed: 175 mph
Enclosure: Closed
Risk Category: II
EXP: C Kzt: NA
Mean Height: 15.00 ft
TCDL: 6.0 psf
BCDL: 6.0 psf
MWFRS Parallel Dist: h/2 to h
C&C Dist a: 3.00 ft
Loc. from endwall: not in 9.00 ft
GCpi: 0.18
Wind Duration: 1.60

Snow Criteria (Pg,Pf in PSF)

Pg: NA Ct: NA CAT: NA
Pf: NA Ce: NA
Lu: NA Cs: NA
Snow Duration: NA

Building Code:
FBC 8th Ed. 2023 Res. HVHZ
TPI Std: 2014
Rep Fac: Varies by Ld Case
FT/RT:20(0)/10(0)
Plate Type(s):
WAVE

Defl/CSI Criteria

PP Deflection in	loc	L/defl	L/#
VERT(LL): -0.109	G	753	360
VERT(CL): 0.183	G	450	240
HORZ(LL): -0.031	D	-	-
HORZ(TL): 0.052	D	-	-

Creep Factor: 2.0
Max TC CSI: 0.563
Max BC CSI: 0.682
Max Web CSI: 0.153
Mfg Specified Camber:

VIEW Ver: 23.02.01A.1204.18

▲ Maximum Reactions (lbs)

Loc	Gravity R+	Gravity / R-	/ Rh	Non-Gravity / Rw	/ U	/ RL
I	-	/-	/604	/-	/-	/423
B	852	/-	/604	/480	/815	/311
F	185	/-	/0	/141	/179	/0
E	155	/-	/-	/97	/213	/-

Wind reactions based on C&C
I Brg Wid = 1.5 Min Req = -
B Brg Wid = 8.0 Min Req = 1.5 (Truss)
F Brg Wid = 1.5 Min Req = -
E Brg Wid = 1.5 Min Req = -
Bearing B is a rigid surface.

Maximum Top Chord Forces Per Ply (lbs)

Chords	Tens.	Comp.	Chords	Tens.	Comp.
A - B	665	- 377	C - D	132	- 253
B - C	704	- 383	D - E	49	- 80

Maximum Bot Chord Forces Per Ply (lbs)

Chords	Tens.	Comp.	Chords	Tens.	Comp.
C - G	201	- 302	G - F	0	0

Maximum Web Forces Per Ply (lbs)

Webs	Tens.	Comp.	Webs	Tens.	Comp.
A - H	420	- 601	H - I	423	- 604
B - H	65	- 31	D - G	425	- 269

Lumber

Top chord: 2x4 SP #2;
Bot chord: 2x4 SP #2;
Webs: 2x4 SP #2;
Lt Wedge: 2x4 SP #2;Lt Level Return: 2x4 SP #2;

Special Loads

------(Lumber Dur.Fac.=1.25 / Plate Dur.Fac.=1.25)

TC: From	90 plf at	-2.83 to	90 plf at	7.00
BC: From	20 plf at	0.00 to	20 plf at	7.00
PLB: From	4 plf at	-2.79 to	4 plf at	-0.17

TC: 165 lb Conc. Load at -2.58

Plating Notes

(**) 1 plate(s) require special positioning. Refer to scaled plate plot details for special positioning requirements.

Wind

Member design based on both MWFRS and C&C.

Wind loading based on both gable and hip roof types.

Additional Notes

The maximum horizontal reaction is 604#

***** BEARING ANALOG MODIFIED! *****

****WARNING**** READ AND FOLLOW ALL NOTES ON THIS DRAWING!
****IMPORTANT**** FURNISH THIS DRAWING TO ALL CONTRACTORS INCLUDING THE INSTALLERS
Trusses require extreme care in fabricating, handling, shipping, installing and bracing. Refer to and follow the latest edition of BCSI (Building Component Safety Information, by TPI and SBCA) for safety practices prior to performing these functions. Installers shall provide temporary bracing per BCSI. Unless noted otherwise, top chord shall have properly attached structural sheathing and bottom chord shall have a properly attached rigid ceiling. Locations shown for permanent lateral restraint of webs shall have continuous lateral restraint (CLR), installed with diagonal bracing installed on the CLR per BCSI sections B3, B7, or B10, as applicable. Apply plates to each face of truss and position as shown above and on the Joint Details, unless noted otherwise. Refer to drawings 160A-Z for standard plate positions. Refer to job's General Notes page for additional information.
Alpine, a division of ITW Building Components Group Inc. shall not be responsible for any deviation from this drawing, any failure to build the truss in conformance with ANSI/TPI 1, or for handling, shipping, installation and bracing of trusses. A seal on this drawing or cover page listing this drawing, indicates acceptance of professional engineering responsibility solely for the design shown. The suitability and use of this drawing for any structure is the responsibility of the Building Designer per ANSI/TPI 1 Sec.2.
For more information see these web sites: Alpine: alpineitw.com; TPI: tpinst.org; SBCA: sbcacomponents.com; ICC: iccsafe.org; AWC: awc.org

SEQN: 203870 / T83 / EJAC FROM:	Ply: 1 Qty: 6 Wgt: 32.2 lbs	**Job Number:** 24070306 7725 RES. **Truss Label:** J6	DRW: ... / ... 07/24/2024

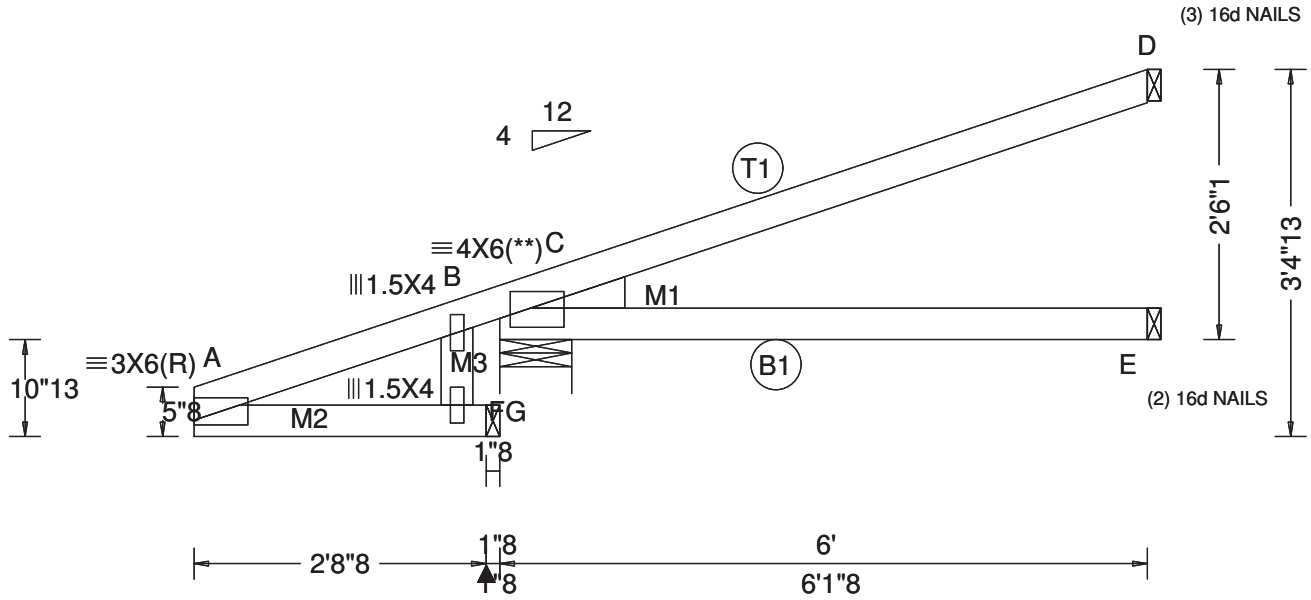

Loading Criteria (psf)

TCLL:	30.00
TCDL:	15.00
BCLL:	0.00
BCDL:	10.00
Des Ld:	55.00
NCBCLL:	10.00
Soffit:	2.00

Load Duration: 1.25
Spacing: 24.0 "

Wind Criteria
Wind Std: ASCE 7-22
Speed: 175 mph
Enclosure: Closed
Risk Category: II
EXP: C Kzt: NA
Mean Height: 15.00 ft
TCDL: 6.0 psf
BCDL: 6.0 psf
MWFRS Parallel Dist: h/2 to h
C&C Dist a: 3.00 ft
Loc. from endwall: not in 9.00 ft
GCpi: 0.18
Wind Duration: 1.60

Snow Criteria (Pg,Pf in PSF)
Pg: NA Ct: NA CAT: NA
Pf: NA Ce: NA
Lu: NA Cs: NA
Snow Duration: NA

Building Code:
FBC 8th Ed. 2023 Res. HVHZ
TPI Std: 2014
Rep Fac: Yes
FT/RT:20(0)/10(0)
Plate Type(s):
WAVE

Defl/CSI Criteria
PP Deflection in loc L/defl L/#
VERT(LL): NA
VERT(CL): NA
HORZ(LL): -0.021 C - -
HORZ(TL): 0.032 C - -
Creep Factor: 2.0
Max TC CSI: 0.690
Max BC CSI: 0.349
Max Web CSI: 0.000
Mfg Specified Camber:

VIEW Ver: 23.02.01A.1204.18

▲ Maximum Reactions (lbs)

	Gravity			Non-Gravity		
Loc	R+	/ R-	/ Rh	/ Rw	/ U	/ RL
G	-	/-	/214	/-	/-	/417
B	631	/-	/214	/454	/839	/231
E	101	/-	/-	/67	/17	/-
D	212	/-	/-	/132	/327	/-

Wind reactions based on C&C
G Brg Wid = 1.5 Min Req = -
B Brg Wid = 8.0 Min Req = 1.5 (Truss)
E Brg Wid = 1.5 Min Req = -
D Brg Wid = 1.5 Min Req = -
Bearing B is a rigid surface.

Maximum Top Chord Forces Per Ply (lbs)

Chords	Tens.	Comp.	Chords	Tens.	Comp.
A - B	258	- 374	C - D	67	- 123
B - C	282	- 377			

Maximum Bot Chord Forces Per Ply (lbs)

Chords	Tens.	Comp.
C - E	0	0

Maximum Web Forces Per Ply (lbs)

Webs	Tens.	Comp.	Webs	Tens.	Comp.
A - F	416	- 213	F - G	417	- 215
B - F	49	- 25			

Lumber
Top chord: 2x4 SP #2;
Bot chord: 2x4 SP #2;
Lt Wedge: 2x4 SP #2;Lt Level Return: 2x4 SP #2;

Plating Notes
(**) 1 plate(s) require special positioning. Refer to scaled plate plot details for special positioning requirements.

Wind
Member design based on both MWFRS and C&C.
Wind loading based on both gable and hip roof types.

Additional Notes
The maximum horizontal reaction is 214#
***** BEARING ANALOG MODIFIED! *****

****WARNING**** READ AND FOLLOW ALL NOTES ON THIS DRAWING!
****IMPORTANT**** FURNISH THIS DRAWING TO ALL CONTRACTORS INCLUDING THE INSTALLERS
Trusses require extreme care in fabricating, handling, shipping, installing and bracing. Refer to and follow the latest edition of BCSI (Building Component Safety Information, by TPI and SBCA) for safety practices prior to performing these functions. Installers shall provide temporary bracing per BCSI. Unless noted otherwise, top chord shall have properly attached structural sheathing and bottom chord shall have a properly attached rigid ceiling. Locations shown for permanent lateral restraint of webs shall have continuous lateral restraint (CLR), installed with diagonal bracing installed on the CLR per BCSI sections B3, B7, or B10, as applicable. Apply plates to each face of truss and position as shown above and on the Joint Details, unless noted otherwise. Refer to drawings 160A-Z for standard plate positions. Refer to job's General Notes page for additional information.
Alpine, a division of ITW Building Components Group Inc. shall not be responsible for any deviation from this drawing, any failure to build the truss in conformance with ANSI/TPI 1, or for handling, shipping, installation and bracing of trusses. A seal on this drawing or cover page listing this drawing, indicates acceptance of professional engineering responsibility solely for the design shown. The suitability and use of this drawing for any structure is the responsibility of the Building Designer per ANSI/TPI 1 Sec.2.
For more information see these web sites: Alpine: alpineitw.com; TPI: tpinst.org; SBCA: sbcacomponents.com; ICC: iccsafe.org; AWC: awc.org

SEQN: 203780 / T127 / JACK FROM:	Ply: 1 Qty: 10 Wgt: 30.8 lbs	**Job Number:** 24070306 7725 RES. **Truss Label:** JB5AP	DRW: ... / ... 07/18/2024

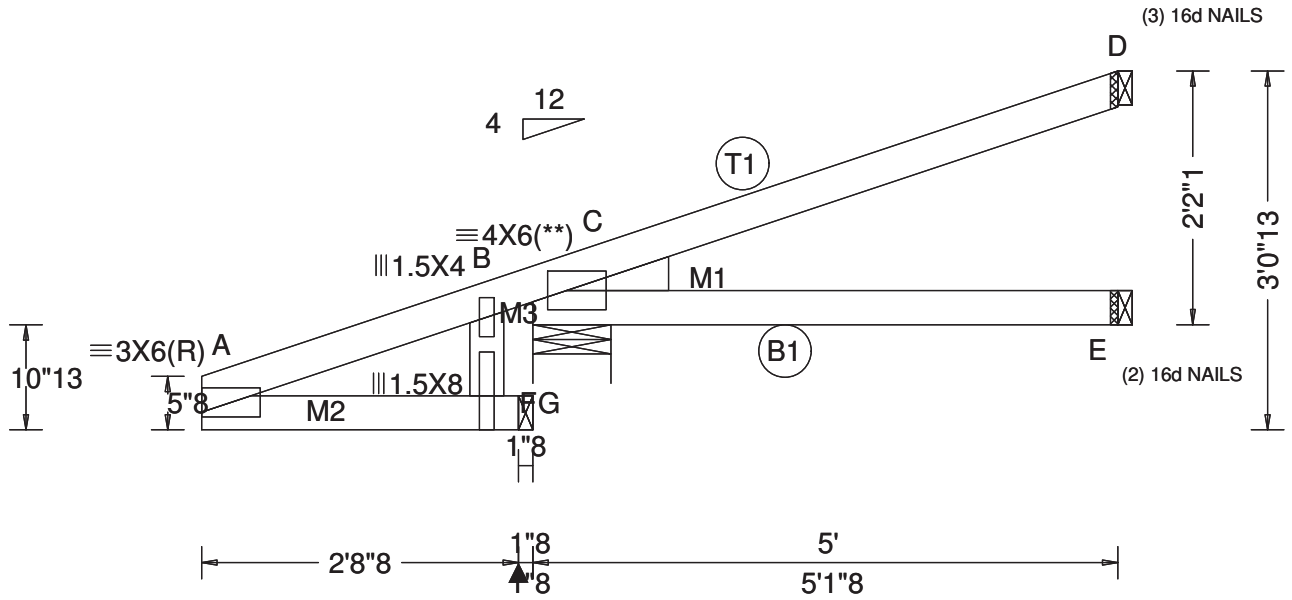

Loading Criteria (psf)

TCLL:	30.00
TCDL:	15.00
BCLL:	0.00
BCDL:	10.00
Des Ld:	55.00
NCBCLL:	10.00
Soffit:	2.00

Load Duration: 1.25
Spacing: 24.0 "

Wind Criteria
Wind Std: ASCE 7-22
Speed: 175 mph
Enclosure: Part. Enc.
Risk Category: II
EXP: C Kzt: NA
Mean Height: 21.37 ft
TCDL: 6.0 psf
BCDL: 6.0 psf
MWFRS Parallel Dist: 0 to h/2
C&C Dist a: 3.00 ft
Loc. from endwall: not in 4.50 ft
GCpi: 0.55
Wind Duration: 1.60

Snow Criteria (Pg,Pf in PSF)
Pg: NA Ct: NA CAT: NA
Pf: NA Ce: NA
Lu: NA Cs: NA
Snow Duration: NA

Building Code:
FBC 8th Ed. 2023 Res. HVHZ
TPI Std: 2014
Rep Fac: Yes
FT/RT:20(0)/10(0)
Plate Type(s):
WAVE

Defl/CSI Criteria

PP Deflection in	loc	L/defl	L/#
VERT(LL): NA			
VERT(CL): NA			
HORZ(LL): -0.019	C	-	-
HORZ(TL): 0.020	C	-	-

Creep Factor: 2.0
Max TC CSI: 0.606
Max BC CSI: 0.376
Max Web CSI: 0.000
Mfg Specified Camber:

VIEW Ver: 23.02.01A.1204.18

▲ Maximum Reactions (lbs)

	Gravity			Non-Gravity		
Loc	R+	/ R-	/ Rh	/ Rw	/ U	/ RL
G	-	/-	/240	/-	/-	/814
B	572	/-	/240	/767	/1362	/543
E	83	/-	/-	/187	/203	/-
D	174	/-	/-	/135	/361	/-

Wind reactions based on C&C
G Brg Wid = 1.5 Min Req = -
B Brg Wid = 8.0 Min Req = 1.5 (Truss)
E Brg Wid = 1.5 Min Req = -
D Brg Wid = 1.5 Min Req = -
Bearing B is a rigid surface.

Maximum Top Chord Forces Per Ply (lbs)

Chords	Tens.	Comp.	Chords	Tens.	Comp.
A - B	517	- 774	C - D	55	- 137
B - C	592	- 844			

Maximum Bot Chord Forces Per Ply (lbs)

Chords	Tens.	Comp.
C - E	0	0

Maximum Web Forces Per Ply (lbs)

Webs	Tens.	Comp.	Webs	Tens.	Comp.
A - F	820	- 513	F - G	814	- 504
B - F	206	- 225			

Lumber
Top chord: 2x4 SP #2;
Bot chord: 2x4 SP #2;
Lt Wedge: 2x4 SP #2;Lt Level Return: 2x4 SP #2;

Plating Notes
(**) 1 plate(s) require special positioning. Refer to scaled plate plot details for special positioning requirements.

Wind
Member design based on both MWFRS and C&C.
Wind loading based on both gable and hip roof types.
Left bottom chord exposed to wind.

Additional Notes
The maximum horizontal reaction is 240#
Shim all supports to solid bearing.

****WARNING**** READ AND FOLLOW ALL NOTES ON THIS DRAWING!
****IMPORTANT**** FURNISH THIS DRAWING TO ALL CONTRACTORS INCLUDING THE INSTALLERS
Trusses require extreme care in fabricating, handling, shipping, installing and bracing. Refer to and follow the latest edition of BCSI (Building Component Safety Information, by TPI and SBCA) for safety practices prior to performing these functions. Installers shall provide temporary bracing per BCSI. Unless noted otherwise, top chord shall have properly attached structural sheathing and bottom chord shall have a properly attached rigid ceiling. Locations shown for permanent lateral restraint of webs shall have continuous lateral restraint (CLR), installed with diagonal bracing installed on the CLR per BCSI sections B3, B7, or B10, as applicable. Apply plates to each face of truss and position as shown above and on the Joint Details, unless noted otherwise. Refer to drawings 160A-Z for standard plate positions. Refer to job's General Notes page for additional information.
Alpine, a division of ITW Building Components Group Inc. shall not be responsible for any deviation from this drawing, any failure to build the truss in conformance with ANSI/TPI 1, or for handling, shipping, installation and bracing of trusses. A seal on this drawing or cover page listing this drawing, indicates acceptance of professional engineering responsibility solely for the design shown. The suitability and use of this drawing for any structure is the responsibility of the Building Designer per ANSI/TPI 1 Sec.2.
For more information see these web sites: Alpine: alpineitw.com; TPI: tpinst.org; SBCA: sbcacomponents.com; ICC: iccsafe.org; AWC: awc.org

SEQN: 203783 / T53 / JACK FROM:	Ply: 1 Qty: 4 Wgt: 30.8 lbs	**Job Number:** 24070306 7725 RES. **Truss Label:** JB5A	DRW: ... / ... 07/24/2024

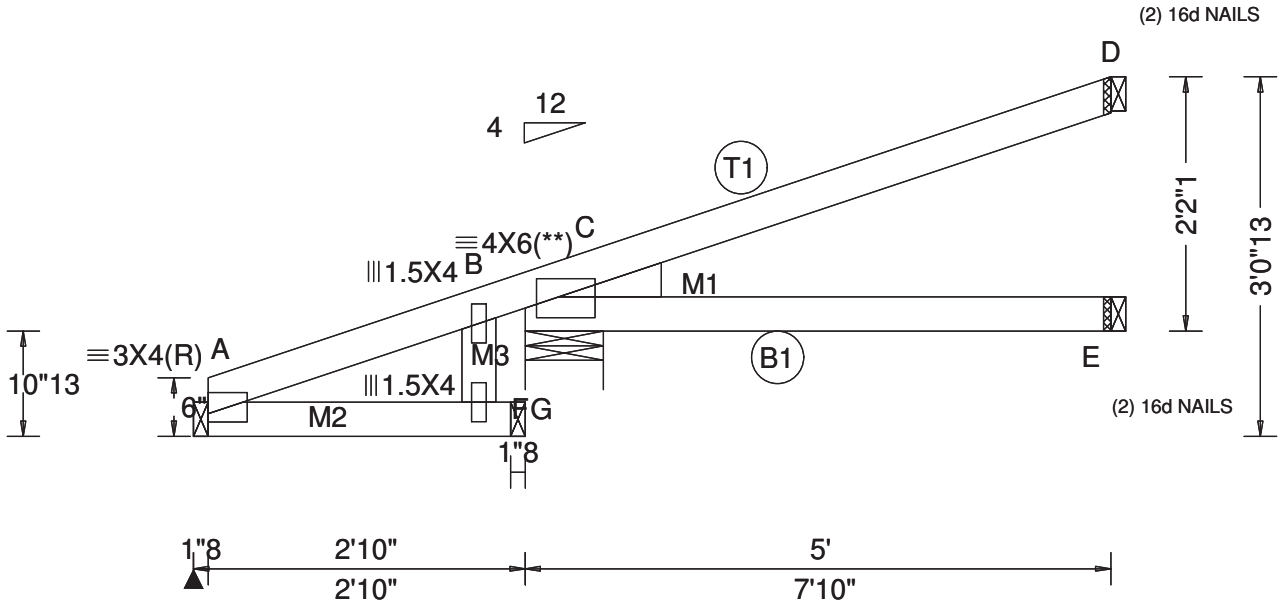

Loading Criteria (psf)

TCLL:	30.00
TCDL:	15.00
BCLL:	0.00
BCDL:	10.00
Des Ld:	55.00
NCBCLL:	10.00
Soffit:	2.00

Load Duration: 1.25
Spacing: 24.0 "

Wind Criteria
Wind Std: ASCE 7-22
Speed: 175 mph
Enclosure: Closed
Risk Category: II
EXP: C Kzt: NA
Mean Height: 15.00 ft
TCDL: 6.0 psf
BCDL: 6.0 psf
MWFRS Parallel Dist: 0 to h/2
C&C Dist a: 3.00 ft
Loc. from endwall: not in 4.50 ft
GCpi: 0.18
Wind Duration: 1.60

Snow Criteria (Pg,Pf in PSF)
Pg: NA Ct: NA CAT: NA
Pf: NA Ce: NA
Lu: NA Cs: NA
Snow Duration: NA

Building Code:
FBC 8th Ed. 2023 Res. HVHZ
TPI Std: 2014
Rep Fac: Yes
FT/RT:20(0)/10(0)
Plate Type(s):
WAVE

Defl/CSI Criteria
PP Deflection in loc L/defl L/#
VERT(LL): NA
VERT(CL): NA
HORZ(LL): -0.010 C - -
HORZ(TL): 0.016 C - -
Creep Factor: 2.0
Max TC CSI: 0.389
Max BC CSI: 0.229
Max Web CSI: 0.000
Mfg Specified Camber:

VIEW Ver: 23.02.01A.1204.18

▲ Maximum Reactions (lbs)

	Gravity			Non-Gravity		
Loc	R+	/ R-	/ Rh	/ Rw	/ U	/ RL
A	98	/-112	/-	/12	/-	/-
G	-	/-	/268	/-	/-	/220
B	563	/-	/268	/376	/541	/104
E	82	/-	/-	/50	/12	/-
D	171	/-	/-	/104	/236	/-

Wind reactions based on C&C
A Brg Wid = 1.5 Min Req = -
G Brg Wid = 1.5 Min Req = -
B Brg Wid = 8.0 Min Req = 1.5 (Truss)
E Brg Wid = 1.5 Min Req = -
D Brg Wid = 1.5 Min Req = -
Bearing B is a rigid surface.

Maximum Top Chord Forces Per Ply (lbs)

Chords	Tens.	Comp.	Chords	Tens.	Comp.
A - B	306	- 197	C - D	54	- 90
B - C	317	- 191			

Maximum Bot Chord Forces Per Ply (lbs)

Chords	Tens.	Comp.
C - E	0	0

Maximum Web Forces Per Ply (lbs)

Webs	Tens.	Comp.	Webs	Tens.	Comp.
A - F	222	- 274	F - G	220	- 268
B - F	41	- 9			

Lumber
Top chord: 2x4 SP #2;
Bot chord: 2x4 SP #2;
Lt Wedge: 2x4 SP #2;Lt Level Return: 2x4 SP #2;

Plating Notes
(**) 1 plate(s) require special positioning. Refer to scaled plate plot details for special positioning requirements.

Wind
Member design based on both MWFRS and C&C.
Wind loading based on both gable and hip roof types.

Additional Notes
The maximum horizontal reaction is 268#
Shim all supports to solid bearing.
***** BEARING ANALOG MODIFIED! *****

WARNING READ AND FOLLOW ALL NOTES ON THIS DRAWING!
IMPORTANT FURNISH THIS DRAWING TO ALL CONTRACTORS INCLUDING THE INSTALLERS
Trusses require extreme care in fabricating, handling, shipping, installing and bracing. Refer to and follow the latest edition of BCSI (Building Component Safety Information, by TPI and SBCA) for safety practices prior to performing these functions. Installers shall provide temporary bracing per BCSI. Unless noted otherwise, top chord shall have properly attached structural sheathing and bottom chord shall have a properly attached rigid ceiling. Locations shown for permanent lateral restraint of webs shall have continuous lateral restraint (CLR), installed with diagonal bracing installed on the CLR per BCSI sections B3, B7, or B10, as applicable. Apply plates to each face of truss and position as shown above and on the Joint Details, unless noted otherwise. Refer to drawings 160A-Z for standard plate positions. Refer to job's General Notes page for additional information.
Alpine, a division of ITW Building Components Group Inc. shall not be responsible for any deviation from this drawing, any failure to build the truss in conformance with ANSI/TPI 1, or for handling, shipping, installation and bracing of trusses. A seal on this drawing or cover page listing this drawing, indicates acceptance of professional engineering responsibility solely for the design shown. The suitability and use of this drawing for any structure is the responsibility of the Building Designer per ANSI/TPI 1 Sec.2.
For more information see these web sites: Alpine: alpineitw.com; TPI: tpinst.org; SBCA: sbcacomponents.com; ICC: iccsafe.org; AWC: awc.org

SEQN: 203786 / T6 / JACK FROM:	Ply: 1 Qty: 11 Wgt: 28.0 lbs	**Job Number:** 24070306 7725 RES. **Truss Label:** JB5B	DRW: ... / ... 07/24/2024

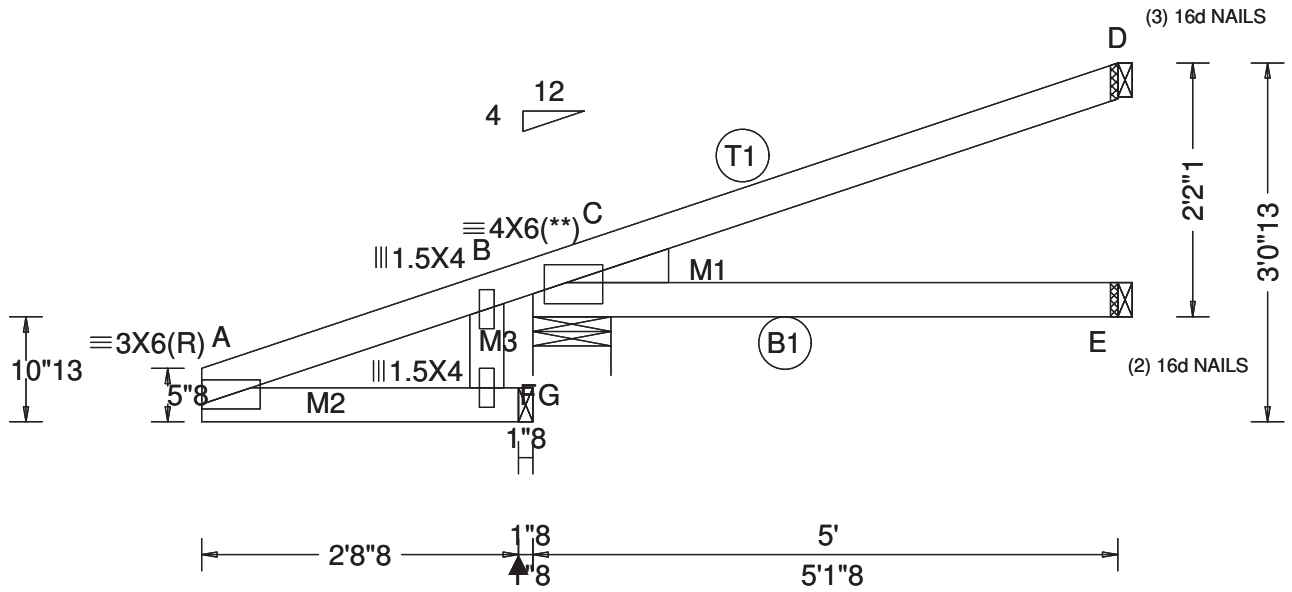

Loading Criteria (psf)

TCLL:	30.00
TCDL:	15.00
BCLL:	0.00
BCDL:	10.00
Des Ld:	55.00
NCBCLL:	10.00
Soffit:	2.00

Load Duration: 1.25
Spacing: 24.0 "

Wind Criteria
Wind Std: ASCE 7-22
Speed: 175 mph
Enclosure: Closed
Risk Category: II
EXP: C Kzt: NA
Mean Height: 15.00 ft
TCDL: 6.0 psf
BCDL: 6.0 psf
MWFRS Parallel Dist: 0 to h/2
C&C Dist a: 3.00 ft
Loc. from endwall: not in 4.50 ft
GCpi: 0.18
Wind Duration: 1.60

Snow Criteria (Pg,Pf in PSF)
Pg: NA Ct: NA CAT: NA
Pf: NA Ce: NA
Lu: NA Cs: NA
Snow Duration: NA

Building Code:
FBC 8th Ed. 2023 Res. HVHZ
TPI Std: 2014
Rep Fac: Yes
FT/RT:20(0)/10(0)
Plate Type(s):
WAVE

Defl/CSI Criteria
PP Deflection in loc L/defl L/#
VERT(LL): NA
VERT(CL): NA
HORZ(LL): -0.012 C - -
HORZ(TL): 0.018 C - -
Creep Factor: 2.0
Max TC CSI: 0.458
Max BC CSI: 0.256
Max Web CSI: 0.000
Mfg Specified Camber:

VIEW Ver: 23.02.01A.1204.18

▲ Maximum Reactions (lbs)

	Gravity			Non-Gravity		
Loc	R+	/ R-	/ Rh	/ Rw	/ U	/ RL
G	-	/-	/240	/-	/-	/493
B	572	/-	/240	/424	/817	/203
E	83	/-	/-	/58	/18	/-
D	174	/-	/-	/111	/277	/-

Wind reactions based on C&C
G Brg Wid = 1.5 Min Req = -
B Brg Wid = 8.0 Min Req = 1.5 (Truss)
E Brg Wid = 1.5 Min Req = -
D Brg Wid = 1.5 Min Req = -
Bearing B is a rigid surface.

Maximum Top Chord Forces Per Ply (lbs)

Chords	Tens.	Comp.	Chords	Tens.	Comp.
A - B	280	- 438	C - D	55	- 103
B - C	307	- 449			

Maximum Bot Chord Forces Per Ply (lbs)

Chords	Tens.	Comp.
C - E	0	0

Maximum Web Forces Per Ply (lbs)

Webs	Tens.	Comp.	Webs	Tens.	Comp.
A - F	487	- 242	F - G	493	- 242
B - F	53	- 33			

Lumber
Top chord: 2x4 SP #2;
Bot chord: 2x4 SP #2;
Lt Wedge: 2x4 SP #2;Lt Level Return: 2x4 SP #2;

Plating Notes
(**) 1 plate(s) require special positioning. Refer to scaled plate plot details for special positioning requirements.

Wind
Member design based on both MWFRS and C&C.
Wind loading based on both gable and hip roof types.

Additional Notes
The maximum horizontal reaction is 240#
Shim all supports to solid bearing.

****WARNING**** READ AND FOLLOW ALL NOTES ON THIS DRAWING!
****IMPORTANT**** FURNISH THIS DRAWING TO ALL CONTRACTORS INCLUDING THE INSTALLERS
Trusses require extreme care in fabricating, handling, shipping, installing and bracing. Refer to and follow the latest edition of BCSI (Building Component Safety Information, by TPI and SBCA) for safety practices prior to performing these functions. Installers shall provide temporary bracing per BCSI. Unless noted otherwise, top chord shall have properly attached structural sheathing and bottom chord shall have a properly attached rigid ceiling. Locations shown for permanent lateral restraint of webs shall have continuous lateral restraint (CLR), installed with diagonal bracing installed on the CLR per BCSI sections B3, B7, or B10, as applicable. Apply plates to each face of truss and position as shown above and on the Joint Details, unless noted otherwise. Refer to drawings 160A-Z for standard plate positions. Refer to job's General Notes page for additional information.
Alpine, a division of ITW Building Components Group Inc. shall not be responsible for any deviation from this drawing, any failure to build the truss in conformance with ANSI/TPI 1, or for handling, shipping, installation and bracing of trusses. A seal on this drawing or cover page listing this drawing, indicates acceptance of professional engineering responsibility solely for the design shown. The suitability and use of this drawing for any structure is the responsibility of the Building Designer per ANSI/TPI 1 Sec.2.
For more information see these web sites: Alpine: alpineitw.com; TPI: tpinst.org; SBCA: sbcacomponents.com; ICC: iccsafe.org; AWC: awc.org

SEQN: 203799 / T43 / JACK FROM:	Ply: 1 Qty: 1 Wgt: 36.4 lbs	**Job Number:** 24070306 7725 RES. **Truss Label:** JB5C	DRW: ... / ... 07/24/2024

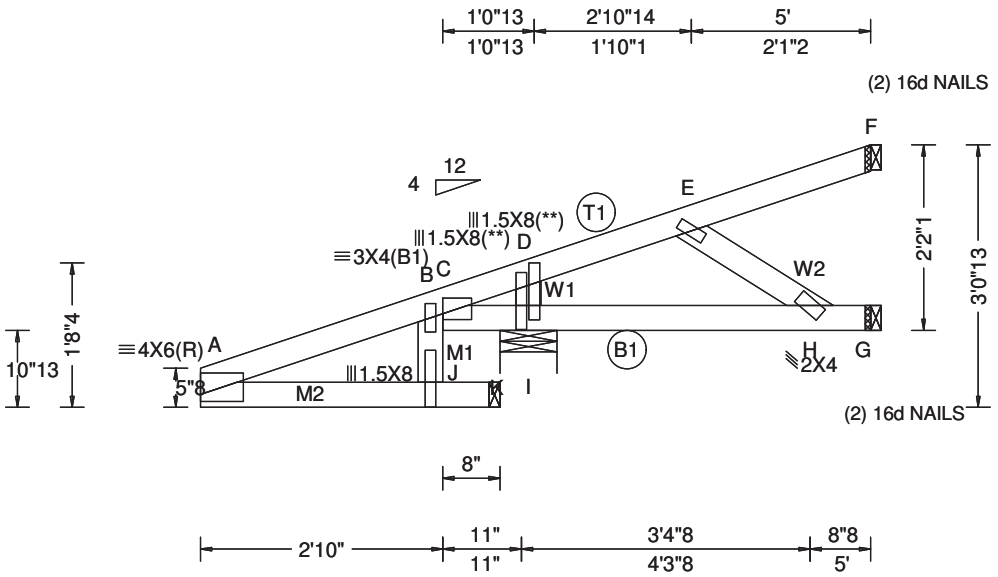

Loading Criteria (psf)

TCLL:	30.00
TCDL:	15.00
BCLL:	0.00
BCDL:	10.00
Des Ld:	55.00
NCBCLL:	10.00
Soffit:	2.00

Load Duration: 1.25
Spacing: 24.0 "

Wind Criteria
Wind Std: ASCE 7-22
Speed: 175 mph
Enclosure: Closed
Risk Category: II
EXP: C Kzt: NA
Mean Height: 15.00 ft
TCDL: 6.0 psf
BCDL: 6.0 psf
MWFRS Parallel Dist: 0 to h/2
C&C Dist a: 3.00 ft
Loc. from endwall: not in 4.50 ft
GCpi: 0.18
Wind Duration: 1.60

Snow Criteria (Pg,Pf in PSF)
Pg: NA Ct: NA CAT: NA
Pf: NA Ce: NA
Lu: NA Cs: NA
Snow Duration: NA

Building Code:
FBC 8th Ed. 2023 Res. HVHZ
TPI Std: 2014
Rep Fac: Yes
FT/RT:20(0)/10(0)
Plate Type(s):
WAVE

Defl/CSI Criteria

PP Deflection in	loc	L/defl	L/#
VERT(LL): -0.067	C	95	360
VERT(CL): -0.075	C	85	240
HORZ(LL): 0.036	F	-	-
HORZ(TL): 0.038	F	-	-

Creep Factor: 2.0
Max TC CSI: 0.718
Max BC CSI: 0.434
Max Web CSI: 0.181
Mfg Specified Camber:

VIEW Ver: 23.02.01A.1204.18

▲ Maximum Reactions (lbs)

Loc	Gravity R+	/ R-	/ Rh	Non-Gravity / Rw	/ U	/ RL
K	-	/-	/343	/-	/-	/1013
I	664	/-	/343	/727	/1249	/623
G	85	/-36	/-	/183	/114	/-
F	114	/-	/-	/69	/192	/-

Wind reactions based on C&C
K Brg Wid = 1.5 Min Req = -
I Brg Wid = 8.0 Min Req = 1.5 (Truss)
G Brg Wid = 1.5 Min Req = -
F Brg Wid = 1.5 Min Req = -
Bearing I is a rigid surface.

Maximum Top Chord Forces Per Ply (lbs)

Chords	Tens.	Comp.	Chords	Tens.	Comp.
A - B	586	- 958	D - E	135	- 186
B - C	543	- 847	E - F	36	- 69
C - D	259	- 439			

Maximum Bot Chord Forces Per Ply (lbs)

Chords	Tens.	Comp.	Chords	Tens.	Comp.
C - I	407	- 578	H - G	0	0
I - H	226	- 192			

Maximum Web Forces Per Ply (lbs)

Webs	Tens.	Comp.	Webs	Tens.	Comp.
A - J	1028	- 593	D - I	1029	- 532
J - K	1013	- 576	E - H	230	- 273

Maximum Gable Forces Per Ply (lbs)

Gables	Tens.	Comp.
B - J	227	- 228

Lumber
Top chord: 2x4 SP #2;
Bot chord: 2x4 SP #2;
Webs: 2x4 SP #2;
Lt Level Return: 2x4 SP #2;

Plating Notes
All plates are 1.5X4 except as noted.
(**) 2 plate(s) require special positioning. Refer to scaled plate plot details for special positioning requirements.

Loading
Gable end supports 8" max rake overhang. Top chord must not be cut or notched.

Wind
Member design based on both MWFRS and C&C.
Left end vertical not exposed to wind pressure.
Wind loading based on both gable and hip roof types.

Additional Notes
The maximum horizontal reaction is 343#
Shim all supports to solid bearing.
***** BEARING ANALOG MODIFIED! *****

****WARNING**** READ AND FOLLOW ALL NOTES ON THIS DRAWING!
****IMPORTANT**** FURNISH THIS DRAWING TO ALL CONTRACTORS INCLUDING THE INSTALLERS

Trusses require extreme care in fabricating, handling, shipping, installing and bracing. Refer to and follow the latest edition of BCSI (Building Component Safety Information, by TPI and SBCA) for safety practices prior to performing these functions. Installers shall provide temporary bracing per BCSI. Unless noted otherwise, top chord shall have properly attached structural sheathing and bottom chord shall have a properly attached rigid ceiling. Locations shown for permanent lateral restraint of webs shall have continuous lateral restraint (CLR), installed with diagonal bracing installed on the CLR per BCSI sections B3, B7, or B10, as applicable. Apply plates to each face of truss and position as shown above and on the Joint Details, unless noted otherwise. Refer to drawings 160A-Z for standard plate positions. Refer to job's General Notes page for additional information.
Alpine, a division of ITW Building Components Group Inc. shall not be responsible for any deviation from this drawing, any failure to build the truss in conformance with ANSI/TPI 1, or for handling, shipping, installation and bracing of trusses. A seal on this drawing or cover page listing this drawing, indicates acceptance of professional engineering responsibility solely for the design shown. The suitability and use of this drawing for any structure is the responsibility of the Building Designer per ANSI/TPI 1 Sec.2.
For more information see these web sites: Alpine: alpineitw.com; TPI: tpinst.org; SBCA: sbcacomponents.com; ICC: iccsafe.org; AWC: awc.org

SEQN: 203805 / T50 / JACK FROM:	Ply: 1 Qty: 4 Wgt: 33.6 lbs	**Job Number:** 24070306 7725 RES. **Truss Label:** JB5D	DRW: ... / ... 07/24/2024

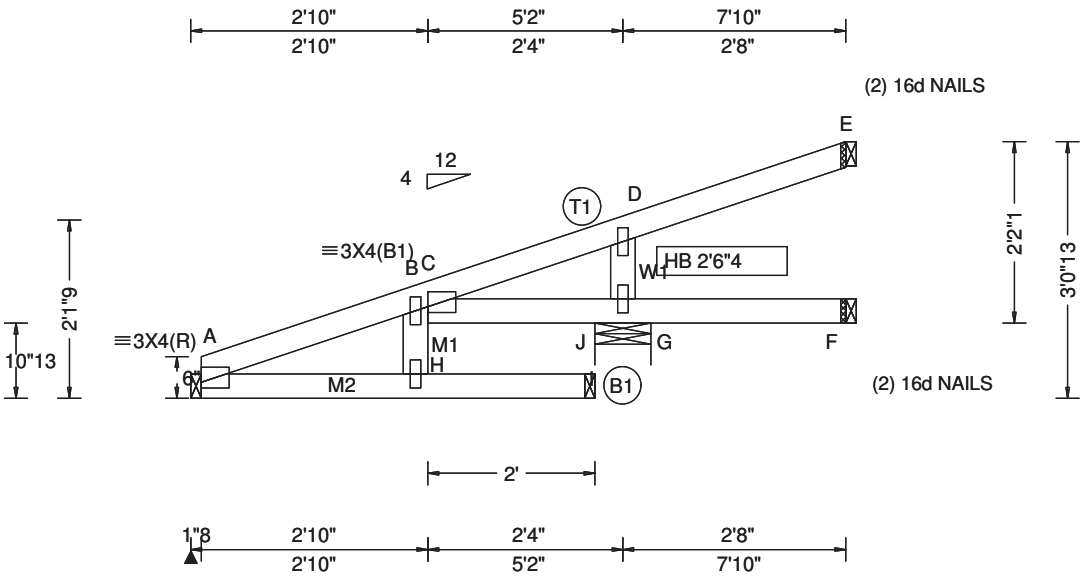

Loading Criteria (psf)

TCLL:	30.00
TCDL:	15.00
BCLL:	0.00
BCDL:	10.00
Des Ld:	55.00
NCBCLL:	10.00
Soffit:	2.00

Load Duration: 1.25
Spacing: 24.0 "

Wind Criteria
Wind Std: ASCE 7-22
Speed: 175 mph
Enclosure: Closed
Risk Category: II
EXP: C Kzt: NA
Mean Height: 15.00 ft
TCDL: 6.0 psf
BCDL: 6.0 psf
MWFRS Parallel Dist: 0 to h/2
C&C Dist a: 3.00 ft
Loc. from endwall: not in 4.50 ft
GCpi: 0.18
Wind Duration: 1.60

Snow Criteria (Pg,Pf in PSF)
Pg: NA Ct: NA CAT: NA
Pf: NA Ce: NA
Lu: NA Cs: NA
Snow Duration: NA

Building Code:
FBC 8th Ed. 2023 Res. HVHZ
TPI Std: 2014
Rep Fac: Yes
FT/RT:20(0)/10(0)
Plate Type(s):
WAVE

Defl/CSI Criteria

PP Deflection in	loc	L/defl	L/#
VERT(LL): 0.011	C	999	360
VERT(CL): 0.019	C	999	240
HORZ(LL): -0.003	E	-	-
HORZ(TL): 0.006	E	-	-

Creep Factor: 2.0
Max TC CSI: 0.177
Max BC CSI: 0.116
Max Web CSI: 0.071
Mfg Specified Camber:

VIEW Ver: 23.02.01A.1204.18

▲ Maximum Reactions (lbs)

Loc	Gravity R+	Gravity / R-	Gravity / Rh	Non-Gravity / Rw	Non-Gravity / U	Non-Gravity / RL
A	329	/-	/-	/254	/249	/-
I	-	/-	/560	/-	/-	/463
J	380	/-	/560	/268	/409	/572
F	38	/-	/-	/19	/-	/-
E	92	/-	/-	/46	/124	/-

Wind reactions based on C&C
A Brg Wid = 1.5 Min Req = -
I Brg Wid = 1.5 Min Req = -
J Brg Wid = 8.0 Min Req = 1.5 (Truss)
F Brg Wid = 1.5 Min Req = -
E Brg Wid = 1.5 Min Req = -
Bearing J is a rigid surface.

Maximum Top Chord Forces Per Ply (lbs)

Chords	Tens.	Comp.	Chords	Tens.	Comp.
A - B	322	- 617	C - D	50	- 180
B - C	358	- 560	D - E	29	- 49

Maximum Bot Chord Forces Per Ply (lbs)

Chords	Tens.	Comp.	Chords	Tens.	Comp.
C - G	572	- 561	G - F	0	0

Maximum Web Forces Per Ply (lbs)

Webs	Tens.	Comp.	Webs	Tens.	Comp.
A - H	556	- 259	D - G	393	- 290
H - I	560	- 248			

Maximum Gable Forces Per Ply (lbs)

Gables	Tens.	Comp.
B - H	103	0

Lumber
Top chord: 2x4 SP #2;
Bot chord: 2x4 SP #2;
Webs: 2x4 SP #2;
Lt Level Return: 2x4 SP #2;

Plating Notes
All plates are 1.5X4 except as noted.

Loading
Gable end supports 8" max rake overhang. Top chord must not be cut or notched.

Wind
Member design based on both MWFRS and C&C.
Wind loading based on both gable and hip roof types.

Additional Notes
The maximum horizontal reaction is 560#
Shim all supports to solid bearing.
***** BEARING ANALOG MODIFIED! *****

****WARNING**** READ AND FOLLOW ALL NOTES ON THIS DRAWING!
****IMPORTANT**** FURNISH THIS DRAWING TO ALL CONTRACTORS INCLUDING THE INSTALLERS
Trusses require extreme care in fabricating, handling, shipping, installing and bracing. Refer to and follow the latest edition of BCSI (Building Component Safety Information, by TPI and SBCA) for safety practices prior to performing these functions. Installers shall provide temporary bracing per BCSI. Unless noted otherwise, top chord shall have properly attached structural sheathing and bottom chord shall have a properly attached rigid ceiling. Locations shown for permanent lateral restraint of webs shall have continuous lateral restraint (CLR), installed with diagonal bracing installed on the CLR per BCSI sections B3, B7, or B10, as applicable. Apply plates to each face of truss and position as shown above and on the Joint Details, unless noted otherwise. Refer to drawings 160A-Z for standard plate positions. Refer to job's General Notes page for additional information.
Alpine, a division of ITW Building Components Group Inc. shall not be responsible for any deviation from this drawing, any failure to build the truss in conformance with ANSI/TPI 1, or for handling, shipping, installation and bracing of trusses. A seal on this drawing or cover page listing this drawing, indicates acceptance of professional engineering responsibility solely for the design shown. The suitability and use of this drawing for any structure is the responsibility of the Building Designer per ANSI/TPI 1 Sec.2.
For more information see these web sites: Alpine: alpineitw.com; TPI: tpinst.org; SBCA: sbcacomponents.com; ICC: iccsafe.org; AWC: awc.org

SEQN: 203808 / T135 / JACK FROM:	Ply: 1 Qty: 6 Wgt: 32.2 lbs	**Job Number:** 24070306 7725 RES. **Truss Label:** JB5P	DRW: ... / ... 07/18/2024

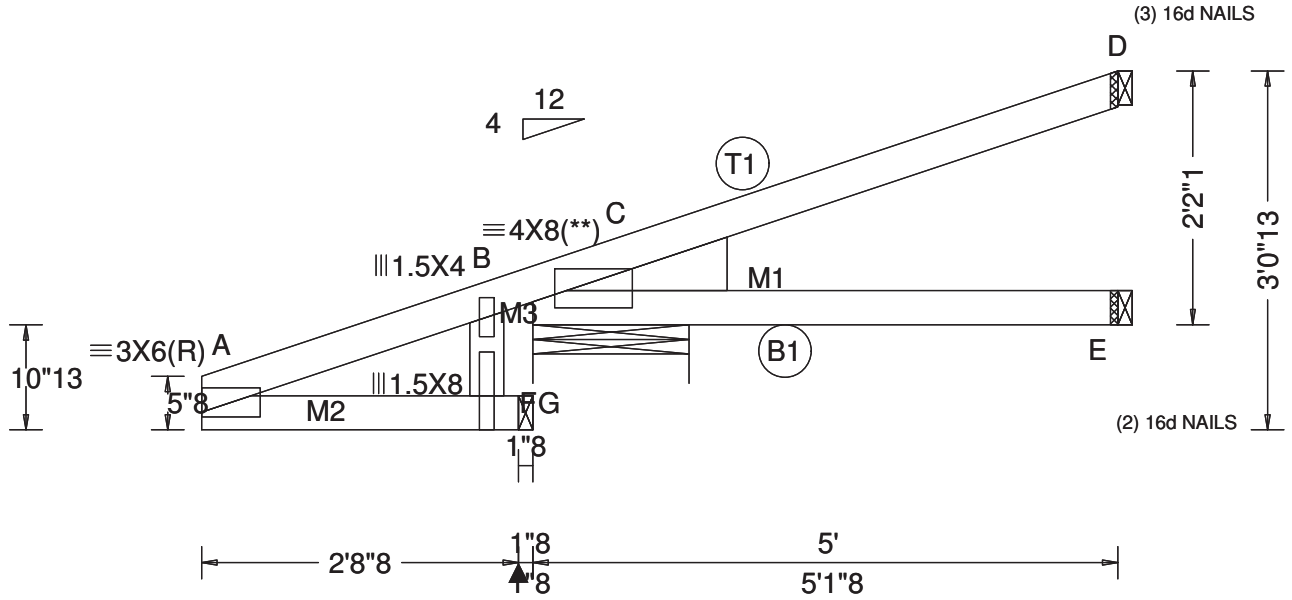

Loading Criteria (psf)

TCLL:	30.00
TCDL:	15.00
BCLL:	0.00
BCDL:	10.00
Des Ld:	55.00
NCBCLL:	10.00
Soffit:	2.00

Load Duration: 1.25
Spacing: 24.0 "

Wind Criteria
Wind Std: ASCE 7-22
Speed: 175 mph
Enclosure: Part. Enc.
Risk Category: II
EXP: C Kzt: NA
Mean Height: 15.00 ft
TCDL: 6.0 psf
BCDL: 6.0 psf
MWFRS Parallel Dist: h/2 to h
C&C Dist a: 3.00 ft
Loc. from endwall: not in 4.50 ft
GCpi: 0.55
Wind Duration: 1.60

Snow Criteria (Pg,Pf in PSF)
Pg: NA Ct: NA CAT: NA
Pf: NA Ce: NA
Lu: NA Cs: NA
Snow Duration: NA

Building Code:
FBC 8th Ed. 2023 Res. HVHZ
TPI Std: 2014
Rep Fac: Yes
FT/RT:20(0)/10(0)
Plate Type(s):
WAVE

Defl/CSI Criteria
PP Deflection in loc L/defl L/#
VERT(LL): NA
VERT(CL): NA
HORZ(LL): 0.003 C - -
HORZ(TL): 0.003 C - -
Creep Factor: 2.0
Max TC CSI: 0.391
Max BC CSI: 0.198
Max Web CSI: 0.000
Mfg Specified Camber:

VIEW Ver: 23.02.01A.1204.18

▲ Maximum Reactions (lbs)

	Gravity			Non-Gravity		
Loc	R+	/ R-	/ Rh	/ Rw	/ U	/ RL
G	-	/-	/265	/-	/-	/873
B	628	/-	/265	/780	/1341	/555
E	62	/-	/-	/150	/146	/-
D	134	/-	/-	/107	/268	/-

Wind reactions based on C&C
G Brg Wid = 1.5 Min Req = -
B Brg Wid = 16.0 Min Req = 1.5 (Truss)
E Brg Wid = 1.5 Min Req = -
D Brg Wid = 1.5 Min Req = -
Bearing B is a rigid surface.

Maximum Top Chord Forces Per Ply (lbs)

Chords	Tens.	Comp.	Chords	Tens.	Comp.
A - B	533	- 817	C - D	42	- 109
B - C	609	- 895			

Maximum Bot Chord Forces Per Ply (lbs)

Chords	Tens.	Comp.
C - E	0	0

Maximum Web Forces Per Ply (lbs)

Webs	Tens.	Comp.	Webs	Tens.	Comp.
A - F	869	- 532	F - G	873	- 527
B - F	199	- 219			

Lumber
Top chord: 2x4 SP #2;
Bot chord: 2x4 SP #2;
Lt Wedge: 2x6 SP #2;Lt Level Return: 2x4 SP #2;

Plating Notes
(**) 1 plate(s) require special positioning. Refer to scaled plate plot details for special positioning requirements.

Wind
Member design based on both MWFRS and C&C.
Wind loading based on both gable and hip roof types.
Left bottom chord exposed to wind.

Additional Notes
The maximum horizontal reaction is 265#
Shim all supports to solid bearing.

****WARNING**** READ AND FOLLOW ALL NOTES ON THIS DRAWING!
****IMPORTANT**** FURNISH THIS DRAWING TO ALL CONTRACTORS INCLUDING THE INSTALLERS
Trusses require extreme care in fabricating, handling, shipping, installing and bracing. Refer to and follow the latest edition of BCSI (Building Component Safety Information, by TPI and SBCA) for safety practices prior to performing these functions. Installers shall provide temporary bracing per BCSI. Unless noted otherwise, top chord shall have properly attached structural sheathing and bottom chord shall have a properly attached rigid ceiling. Locations shown for permanent lateral restraint of webs shall have continuous lateral restraint (CLR), installed with diagonal bracing installed on the CLR per BCSI sections B3, B7, or B10, as applicable. Apply plates to each face of truss and position as shown above and on the Joint Details, unless noted otherwise. Refer to drawings 160A-Z for standard plate positions. Refer to job's General Notes page for additional information.
Alpine, a division of ITW Building Components Group Inc. shall not be responsible for any deviation from this drawing, any failure to build the truss in conformance with ANSI/TPI 1, or for handling, shipping, installation and bracing of trusses. A seal on this drawing or cover page listing this drawing, indicates acceptance of professional engineering responsibility solely for the design shown. The suitability and use of this drawing for any structure is the responsibility of the Building Designer per ANSI/TPI 1 Sec.2.
For more information see these web sites: Alpine: alpineitw.com; TPI: tpinst.org; SBCA: sbcacomponents.com; ICC: iccsafe.org; AWC: awc.org

SEQN: 203811 / T137 / JACK FROM:	Ply: 1 Qty: 2 Wgt: 32.2 lbs	**Job Number:** 24070306 7725 RES. **Truss Label:** JB5BP	DRW: ... / ... 07/24/2024

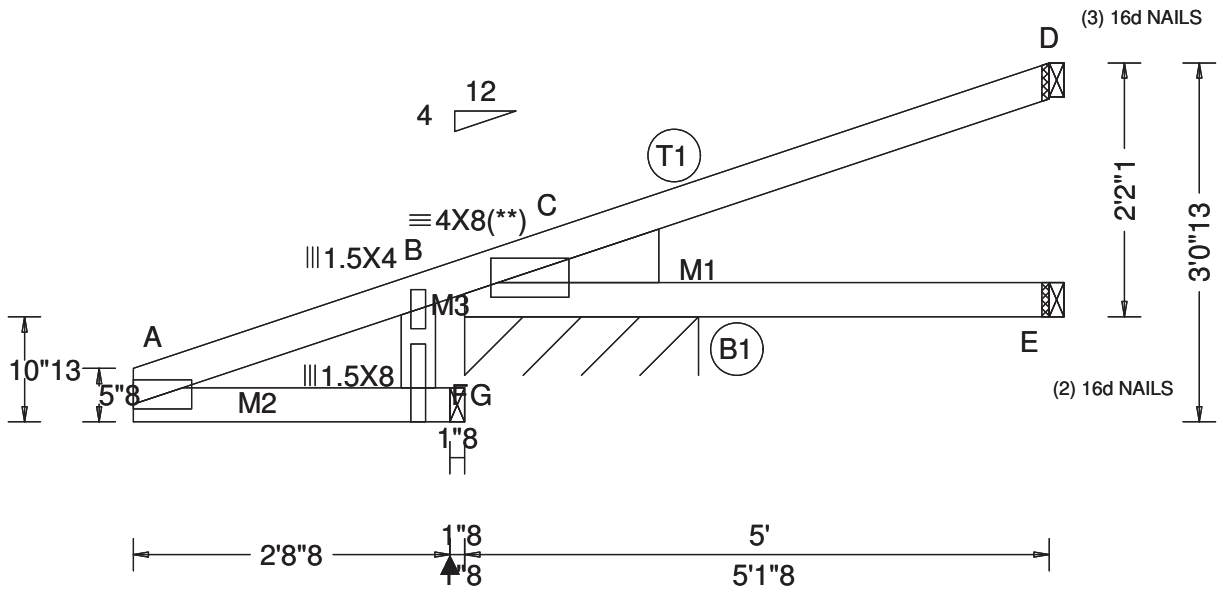

Loading Criteria (psf)

TCLL:	30.00
TCDL:	15.00
BCLL:	0.00
BCDL:	10.00
Des Ld:	55.00
NCBCLL:	10.00
Soffit:	2.00

Load Duration: 1.25
Spacing: 24.0 "

Wind Criteria
Wind Std: ASCE 7-22
Speed: 175 mph
Enclosure: Part. Enc.
Risk Category: II
EXP: C Kzt: NA
Mean Height: 21.37 ft
TCDL: 6.0 psf
BCDL: 6.0 psf
MWFRS Parallel Dist: 0 to h/2
C&C Dist a: 3.00 ft
Loc. from endwall: not in 4.50 ft
GCpi: 0.55
Wind Duration: 1.60

Snow Criteria (Pg,Pf in PSF)
Pg: NA Ct: NA CAT: NA
Pf: NA Ce: NA
Lu: NA Cs: NA
Snow Duration: NA

Building Code:
FBC 8th Ed. 2023 Res. HVHZ
TPI Std: 2014
Rep Fac: Yes
FT/RT:20(0)/10(0)
Plate Type(s):
WAVE

Defl/CSI Criteria
PP Deflection in loc L/defl L/#
VERT(LL): NA
VERT(CL): NA
HORZ(LL): 0.003 C - -
HORZ(TL): 0.004 C - -
Creep Factor: 2.0
Max TC CSI: 0.391
Max BC CSI: 0.192
Max Web CSI: 0.000
Mfg Specified Camber:

VIEW Ver: 23.02.01A.1204.18

▲ Maximum Reactions (lbs), or *=PLF

	Gravity			Non-Gravity		
Loc	R+	/ R-	/ Rh	/ Rw	/ U	/ RL
G	-	/-	/266	/-	/-	/955
B*	324	/-	/133	/409	/747	/299
E	48	/-	/-	/142	/134	/-
D	132	/-	/-	/112	/287	/-

Wind reactions based on C&C
G Brg Wid = 1.5 Min Req = -
B Brg Wid = 24.0 Min Req = -
E Brg Wid = 1.5 Min Req = -
D Brg Wid = 1.5 Min Req = -
Bearing B is a rigid surface.

Maximum Top Chord Forces Per Ply (lbs)

Chords	Tens.	Comp.	Chords	Tens.	Comp.
A - B	563	- 892	C - D	42	- 116
B - C	643	- 979			

Maximum Bot Chord Forces Per Ply (lbs)

Chords	Tens.	Comp.
C - E	0	0

Maximum Web Forces Per Ply (lbs)

Webs	Tens.	Comp.	Webs	Tens.	Comp.
A - F	950	- 563	F - G	955	- 558
B - F	211	- 239			

Lumber
Top chord: 2x4 SP #2;
Bot chord: 2x4 SP #2;
Lt Wedge: 2x6 SP #2;Lt Level Return: 2x4 SP #2;

Plating Notes
All plates are 3X6(R) except as noted.
(**) 1 plate(s) require special positioning. Refer to scaled plate plot details for special positioning requirements.

Wind
Member design based on both MWFRS and C&C.
Wind loading based on both gable and hip roof types.
Left bottom chord exposed to wind.

Additional Notes
The maximum horizontal reaction is 266#
Shim all supports to solid bearing.

****WARNING**** READ AND FOLLOW ALL NOTES ON THIS DRAWING!
****IMPORTANT**** FURNISH THIS DRAWING TO ALL CONTRACTORS INCLUDING THE INSTALLERS

Trusses require extreme care in fabricating, handling, shipping, installing and bracing. Refer to and follow the latest edition of BCSI (Building Component Safety Information, by TPI and SBCA) for safety practices prior to performing these functions. Installers shall provide temporary bracing per BCSI. Unless noted otherwise, top chord shall have properly attached structural sheathing and bottom chord shall have a properly attached rigid ceiling. Locations shown for permanent lateral restraint of webs shall have continuous lateral restraint (CLR), installed with diagonal bracing installed on the CLR per BCSI sections B3, B7, or B10, as applicable. Apply plates to each face of truss and position as shown above and on the Joint Details, unless noted otherwise. Refer to drawings 160A-Z for standard plate positions. Refer to job's General Notes page for additional information.
Alpine, a division of ITW Building Components Group Inc. shall not be responsible for any deviation from this drawing, any failure to build the truss in conformance with ANSI/TPI 1, or for handling, shipping, installation and bracing of trusses. A seal on this drawing or cover page listing this drawing, indicates acceptance of professional engineering responsibility solely for the design shown. The suitability and use of this drawing for any structure is the responsibility of the Building Designer per ANSI/TPI 1 Sec.2.
For more information see these web sites: Alpine: alpineitw.com; TPI: tpinst.org; SBCA: sbcacomponents.com; ICC: iccsafe.org; AWC: awc.org

SEQN: 203814 / T30 / JACK FROM:	Ply: 1 Qty: 13 Wgt: 23.8 lbs	**Job Number:** 24070306 7725 RES. **Truss Label:** JB3	DRW: ... / ... 07/24/2024

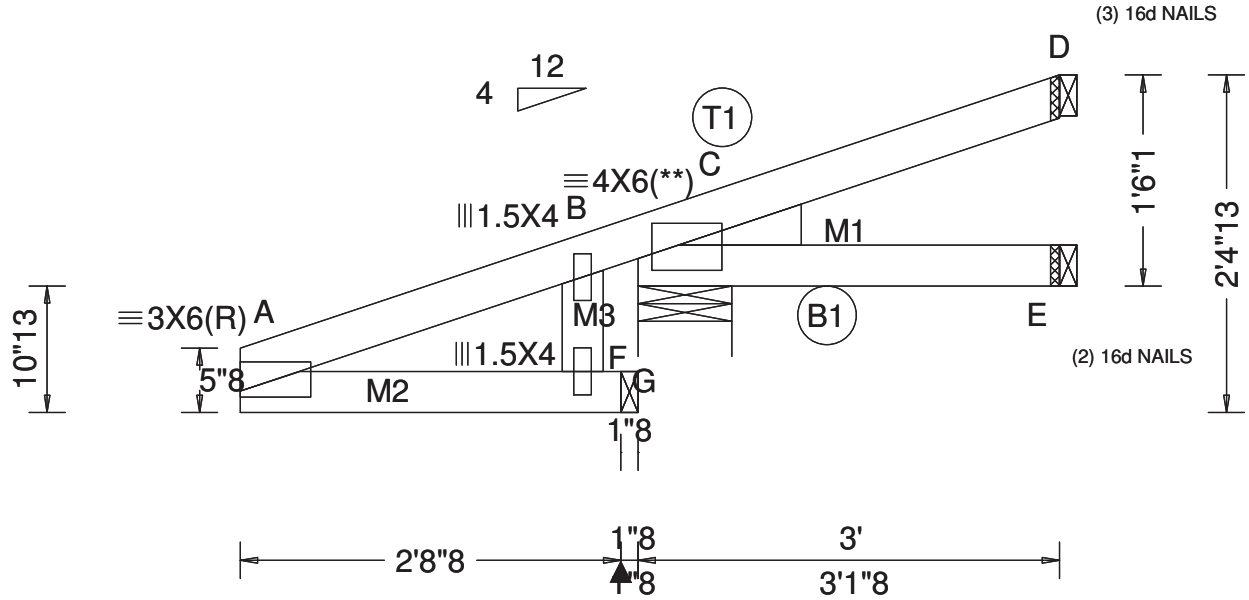

Loading Criteria (psf)

TCLL:	30.00
TCDL:	15.00
BCLL:	0.00
BCDL:	10.00
Des Ld:	55.00
NCBCLL:	10.00
Soffit:	2.00

Load Duration: 1.25
Spacing: 24.0 "

Wind Criteria
Wind Std: ASCE 7-22
Speed: 175 mph
Enclosure: Closed
Risk Category: II
EXP: C Kzt: NA
Mean Height: 15.00 ft
TCDL: 6.0 psf
BCDL: 6.0 psf
MWFRS Parallel Dist: 0 to h/2
C&C Dist a: 3.00 ft
Loc. from endwall: Any
GCpi: 0.18
Wind Duration: 1.60

Snow Criteria (Pg,Pf in PSF)
Pg: NA Ct: NA CAT: NA
Pf: NA Ce: NA
Lu: NA Cs: NA
Snow Duration: NA

Building Code:
FBC 8th Ed. 2023 Res. HVHZ
TPI Std: 2014
Rep Fac: Yes
FT/RT:20(0)/10(0)
Plate Type(s):
WAVE

Defl/CSI Criteria
PP Deflection in loc L/defl L/#
VERT(LL): NA
VERT(CL): NA
HORZ(LL): -0.004 C - -
HORZ(TL): 0.004 C - -
Creep Factor: 2.0
Max TC CSI: 0.350
Max BC CSI: 0.131
Max Web CSI: 0.000
Mfg Specified Camber:

VIEW Ver: 23.02.01A.1204.18

▲ Maximum Reactions (lbs)

	Gravity			Non-Gravity		
Loc	R+	/ R-	/ Rh	/ Rw	/ U	/ RL
G	-	/-	/266	/-	/-	/698
B	465	/-	/266	/374	/937	/301
E	45	/-	/-	/41	/37	/-
D	96	/-	/-	/66	/265	/-

Wind reactions based on C&C
G Brg Wid = 1.5 Min Req = -
B Brg Wid = 8.0 Min Req = 1.5 (Truss)
E Brg Wid = 1.5 Min Req = -
D Brg Wid = 1.5 Min Req = -
Bearing B is a rigid surface.

Maximum Top Chord Forces Per Ply (lbs)

Chords	Tens.	Comp.	Chords	Tens.	Comp.
A - B	302	-618	C - D	30	-91
B - C	332	-644			

Maximum Bot Chord Forces Per Ply (lbs)

Chords	Tens.	Comp.
C - E	0	0

Maximum Web Forces Per Ply (lbs)

Webs	Tens.	Comp.	Webs	Tens.	Comp.
A - F	684	-273	F - G	698	-276
B - F	56	-53			

Lumber
Top chord: 2x4 SP #2;
Bot chord: 2x4 SP #2;
Lt Wedge: 2x4 SP #2;Lt Level Return: 2x4 SP #2;

Plating Notes
(**) 1 plate(s) require special positioning. Refer to scaled plate plot details for special positioning requirements.

Wind
Member design based on both MWFRS and C&C.
Wind loading based on both gable and hip roof types.

Additional Notes
The maximum horizontal reaction is 266#
Shim all supports to solid bearing.

****WARNING**** READ AND FOLLOW ALL NOTES ON THIS DRAWING!
****IMPORTANT**** FURNISH THIS DRAWING TO ALL CONTRACTORS INCLUDING THE INSTALLERS
Trusses require extreme care in fabricating, handling, shipping, installing and bracing. Refer to and follow the latest edition of BCSI (Building Component Safety Information, by TPI and SBCA) for safety practices prior to performing these functions. Installers shall provide temporary bracing per BCSI. Unless noted otherwise, top chord shall have properly attached structural sheathing and bottom chord shall have a properly attached rigid ceiling. Locations shown for permanent lateral restraint of webs shall have continuous lateral restraint (CLR), installed with diagonal bracing installed on the CLR per BCSI sections B3, B7, or B10, as applicable. Apply plates to each face of truss and position as shown above and on the Joint Details, unless noted otherwise. Refer to drawings 160A-Z for standard plate positions. Refer to job's General Notes page for additional information.
Alpine, a division of ITW Building Components Group Inc. shall not be responsible for any deviation from this drawing, any failure to build the truss in conformance with ANSI/TPI 1, or for handling, shipping, installation and bracing of trusses. A seal on this drawing or cover page listing this drawing, indicates acceptance of professional engineering responsibility solely for the design shown. The suitability and use of this drawing for any structure is the responsibility of the Building Designer per ANSI/TPI 1 Sec.2.
For more information see these web sites: Alpine: alpineitw.com; TPI: tpinst.org; SBCA: sbcacomponents.com; ICC: iccsafe.org; AWC: awc.org

SEQN: 203817 / T88 / JACK FROM:	Ply: 1 Qty: 4 Wgt: 23.8 lbs	**Job Number:** 24070306 7725 RES. **Truss Label:** JB3A	DRW: ... / ... 07/24/2024

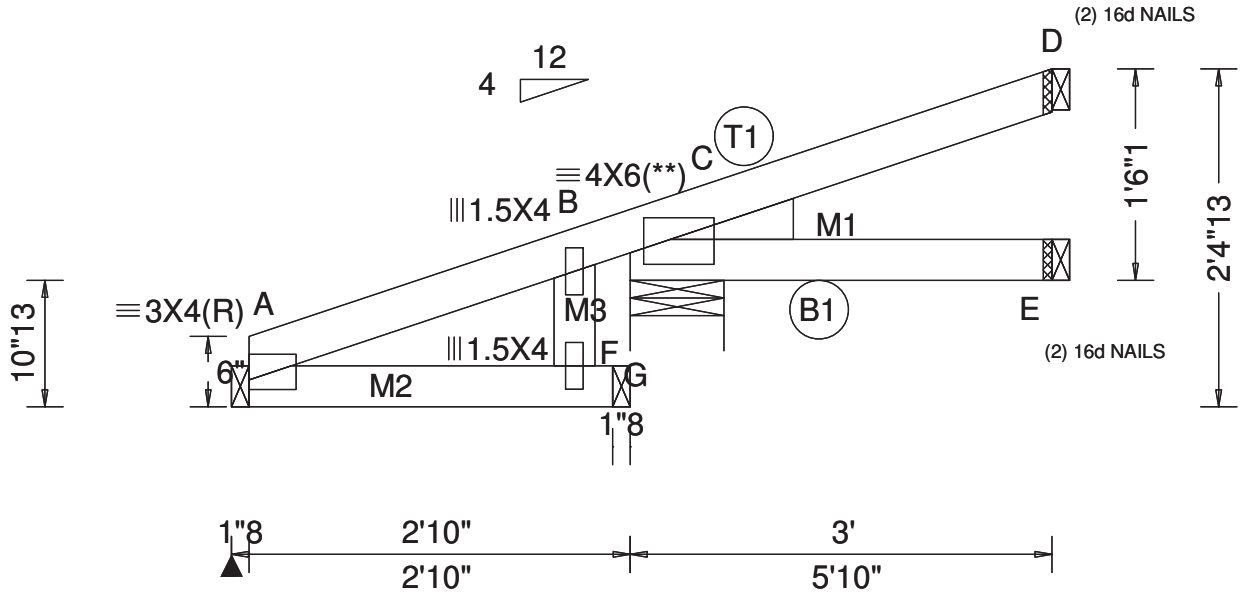

Loading Criteria (psf)

TCLL:	30.00
TCDL:	15.00
BCLL:	0.00
BCDL:	10.00
Des Ld:	55.00
NCBCLL:	10.00
Soffit:	2.00

Load Duration: 1.25
Spacing: 24.0 "

Wind Criteria
Wind Std: ASCE 7-22
Speed: 175 mph
Enclosure: Closed
Risk Category: II
EXP: C Kzt: NA
Mean Height: 15.00 ft
TCDL: 6.0 psf
BCDL: 6.0 psf
MWFRS Parallel Dist: 0 to h/2
C&C Dist a: 3.00 ft
Loc. from endwall: Any
GCpi: 0.18
Wind Duration: 1.60

Snow Criteria (Pg,Pf in PSF)
Pg: NA Ct: NA CAT: NA
Pf: NA Ce: NA
Lu: NA Cs: NA
Snow Duration: NA

Building Code:
FBC 8th Ed. 2023 Res. HVHZ
TPI Std: 2014
Rep Fac: Yes
FT/RT:20(0)/10(0)
Plate Type(s):
WAVE

Defl/CSI Criteria
PP Deflection in loc L/defl L/#
VERT(LL): NA
VERT(CL): NA
HORZ(LL): -0.004 C - -
HORZ(TL): 0.004 C - -
Creep Factor: 2.0
Max TC CSI: 0.217
Max BC CSI: 0.115
Max Web CSI: 0.000
Mfg Specified Camber:

VIEW Ver: 23.02.01A.1204.18

▲ Maximum Reactions (lbs)

	Gravity			Non-Gravity		
Loc	R+	/ R-	/ Rh	/ Rw	/ U	/ RL
A	152	/-	/-	/99	/224	/-
G	-	/-	/113	/-	/-	/70
B	314	/-	/113	/211	/479	/426
E	48	/-	/-	/31	/31	/-
D	97	/-	/-	/58	/199	/-

Wind reactions based on C&C
A Brg Wid = 1.5 Min Req = -
G Brg Wid = 1.5 Min Req = -
B Brg Wid = 8.0 Min Req = 1.5 (Truss)
E Brg Wid = 1.5 Min Req = -
D Brg Wid = 1.5 Min Req = -
Bearing B is a rigid surface.

Maximum Top Chord Forces Per Ply (lbs)

Chords	Tens.	Comp.	Chords	Tens.	Comp.
A - B	155	- 154	C - D	31	- 71
B - C	157	- 91			

Maximum Bot Chord Forces Per Ply (lbs)

Chords	Tens.	Comp.
C - E	0	0

Maximum Web Forces Per Ply (lbs)

Webs	Tens.	Comp.	Webs	Tens.	Comp.
A - F	118	- 78	F - G	113	- 70
B - F	24	- 6			

Lumber
Top chord: 2x4 SP #2;
Bot chord: 2x4 SP #2;
Lt Wedge: 2x4 SP #2;Lt Level Return: 2x4 SP #2;

Plating Notes
(**) 1 plate(s) require special positioning. Refer to scaled plate plot details for special positioning requirements.

Wind
Member design based on both MWFRS and C&C.
Wind loading based on both gable and hip roof types.

Additional Notes
Shim all supports to solid bearing.
***** BEARING ANALOG MODIFIED! *****

****WARNING**** READ AND FOLLOW ALL NOTES ON THIS DRAWING!
****IMPORTANT**** FURNISH THIS DRAWING TO ALL CONTRACTORS INCLUDING THE INSTALLERS
Trusses require extreme care in fabricating, handling, shipping, installing and bracing. Refer to and follow the latest edition of BCSI (Building Component Safety Information, by TPI and SBCA) for safety practices prior to performing these functions. Installers shall provide temporary bracing per BCSI. Unless noted otherwise, top chord shall have properly attached structural sheathing and bottom chord shall have a properly attached rigid ceiling. Locations shown for permanent lateral restraint of webs shall have continuous lateral restraint (CLR), installed with diagonal bracing installed on the CLR per BCSI sections B3, B7, or B10, as applicable. Apply plates to each face of truss and position as shown above and on the Joint Details, unless noted otherwise. Refer to drawings 160A-Z for standard plate positions. Refer to job's General Notes page for additional information.
Alpine, a division of ITW Building Components Group Inc. shall not be responsible for any deviation from this drawing, any failure to build the truss in conformance with ANSI/TPI 1, or for handling, shipping, installation and bracing of trusses. A seal on this drawing or cover page listing this drawing, indicates acceptance of professional engineering responsibility solely for the design shown. The suitability and use of this drawing for any structure is the responsibility of the Building Designer per ANSI/TPI 1 Sec.2.
For more information see these web sites: Alpine: alpineitw.com; TPI: tpinst.org; SBCA: sbcacomponents.com; ICC: iccsafe.org; AWC: awc.org

SEQN: 203820 / T115 / JACK FROM:	Ply: 1 Qty: 4 Wgt: 26.6 lbs	**Job Number:** 24070306 7725 RES. **Truss Label:** JB3B	DRW: ... / ... 07/24/2024

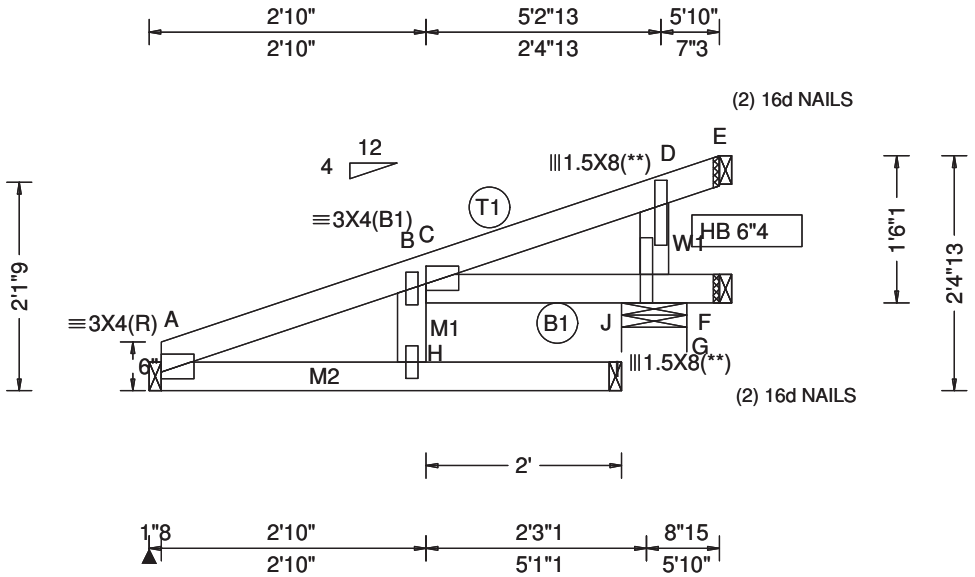

Loading Criteria (psf)

TCLL:	30.00
TCDL:	15.00
BCLL:	0.00
BCDL:	10.00
Des Ld:	55.00
NCBCLL:	10.00
Soffit:	2.00

Load Duration: 1.25
Spacing: 24.0 "

Wind Criteria
Wind Std: ASCE 7-22
Speed: 175 mph
Enclosure: Closed
Risk Category: II
EXP: C Kzt: NA
Mean Height: 15.00 ft
TCDL: 6.0 psf
BCDL: 6.0 psf
MWFRS Parallel Dist: 0 to h/2
C&C Dist a: 3.00 ft
Loc. from endwall: not in 4.50 ft
GCpi: 0.18
Wind Duration: 1.60

Snow Criteria (Pg,Pf in PSF)
Pg: NA Ct: NA CAT: NA
Pf: NA Ce: NA
Lu: NA Cs: NA
Snow Duration: NA

Building Code:
FBC 8th Ed. 2023 Res. HVHZ
TPI Std: 2014
Rep Fac: Yes
FT/RT:20(0)/10(0)
Plate Type(s):
WAVE

Defl/CSI Criteria

PP Deflection in	loc	L/defl	L/#
VERT(LL): 0.011	C	999	360
VERT(CL): 0.019	C	999	240
HORZ(LL): -0.003	E	-	-
HORZ(TL): 0.005	E	-	-

Creep Factor: 2.0
Max TC CSI: 0.205
Max BC CSI: 0.151
Max Web CSI: 0.074
Mfg Specified Camber:

VIEW Ver: 23.02.01A.1204.18

Lumber
Top chord: 2x4 SP #2;
Bot chord: 2x4 SP #2;
Webs: 2x4 SP #2;
Lt Level Return: 2x4 SP #2;

Plating Notes
All plates are 1.5X4 except as noted.
(**) 2 plate(s) require special positioning. Refer to scaled plate plot details for special positioning requirements.

Loading
Gable end supports 8" max rake overhang. Top chord must not be cut or notched.

Wind
Member design based on both MWFRS and C&C.
Wind loading based on both gable and hip roof types.

Additional Notes
The maximum horizontal reaction is 555#
Shim all supports to solid bearing.
***** BEARING ANALOG MODIFIED! *****

▲ Maximum Reactions (lbs)

Loc	Gravity R+	Gravity / R-	Gravity / Rh	Non-Gravity / Rw	Non-Gravity / U	Non-Gravity / RL
A	328	/-	/-	/261	/334	/-
I	-	/-	/555	/-	/-	/481
J	405	/-	/555	/305	/486	/672
F	-	/-59	/-	/58	/50	/-
E	-	/-114	/-	/114	/77	/-

Wind reactions based on C&C

A	Brg Wid = 1.5	Min Req =	-
I	Brg Wid = 1.5	Min Req =	-
J	Brg Wid = 8.0	Min Req =	1.5 (Truss)
F	Brg Wid = 1.5	Min Req =	-
E	Brg Wid = 1.5	Min Req =	-

Bearing J is a rigid surface.

Maximum Top Chord Forces Per Ply (lbs)

Chords	Tens.	Comp.	Chords	Tens.	Comp.
A - B	491	- 613	C - D	46	- 95
B - C	527	- 556	D - E	36	- 46

Maximum Bot Chord Forces Per Ply (lbs)

Chords	Tens.	Comp.	Chords	Tens.	Comp.
C - G	671	- 557	G - F	0	0

Maximum Web Forces Per Ply (lbs)

Webs	Tens.	Comp.	Webs	Tens.	Comp.
A - H	551	- 414	D - G	394	- 282
H - I	555	- 402			

Maximum Gable Forces Per Ply (lbs)

Gables	Tens.	Comp.
B - H	117	0

****WARNING**** READ AND FOLLOW ALL NOTES ON THIS DRAWING!
****IMPORTANT**** FURNISH THIS DRAWING TO ALL CONTRACTORS INCLUDING THE INSTALLERS
Trusses require extreme care in fabricating, handling, shipping, installing and bracing. Refer to and follow the latest edition of BCSI (Building Component Safety Information, by TPI and SBCA) for safety practices prior to performing these functions. Installers shall provide temporary bracing per BCSI. Unless noted otherwise, top chord shall have properly attached structural sheathing and bottom chord shall have a properly attached rigid ceiling. Locations shown for permanent lateral restraint of webs shall have continuous lateral restraint (CLR), installed with diagonal bracing installed on the CLR per BCSI sections B3, B7, or B10, as applicable. Apply plates to each face of truss and position as shown above and on the Joint Details, unless noted otherwise. Refer to drawings 160A-Z for standard plate positions. Refer to job's General Notes page for additional information.
Alpine, a division of ITW Building Components Group Inc. shall not be responsible for any deviation from this drawing, any failure to build the truss in conformance with ANSI/TPI 1, or for handling, shipping, installation and bracing of trusses. A seal on this drawing or cover page listing this drawing, indicates acceptance of professional engineering responsibility solely for the design shown. The suitability and use of this drawing for any structure is the responsibility of the Building Designer per ANSI/TPI 1 Sec.2.
For more information see these web sites: Alpine: alpineitw.com; TPI: tpinst.org; SBCA: sbcacomponents.com; ICC: iccsafe.org; AWC: awc.org

SEQN: 203831 / T47 / JACK FROM:	Ply: 1 Qty: 1 Wgt: 25.2 lbs	**Job Number:** 24070306 7725 RES. **Truss Label:** JB3C	DRW: ... / ... 07/24/2024

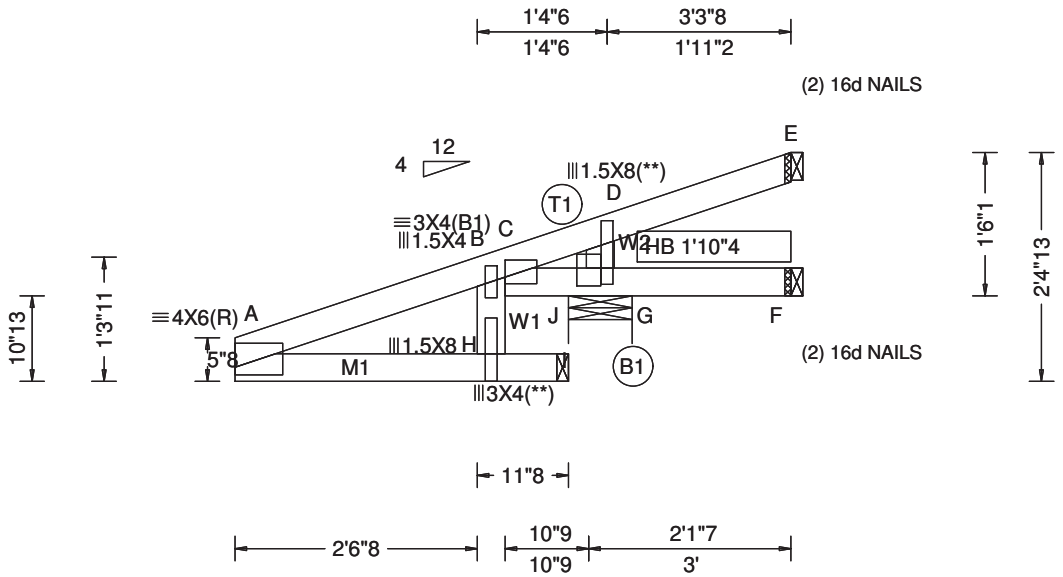

Loading Criteria (psf)

TCLL:	30.00
TCDL:	15.00
BCLL:	0.00
BCDL:	10.00
Des Ld:	55.00
NCBCLL:	10.00
Soffit:	2.00

Load Duration: 1.25
Spacing: 24.0 "

Wind Criteria
Wind Std: ASCE 7-22
Speed: 175 mph
Enclosure: Closed
Risk Category: II
EXP: C Kzt: NA
Mean Height: 15.00 ft
TCDL: 6.0 psf
BCDL: 6.0 psf
MWFRS Parallel Dist: 0 to h/2
C&C Dist a: 3.00 ft
Loc. from endwall: Any
GCpi: 0.18
Wind Duration: 1.60

Snow Criteria (Pg,Pf in PSF)
Pg: NA Ct: NA CAT: NA
Pf: NA Ce: NA
Lu: NA Cs: NA
Snow Duration: NA

Building Code:
FBC 8th Ed. 2023 Res. HVHZ
TPI Std: 2014
Rep Fac: Yes
FT/RT:20(0)/10(0)
Plate Type(s):
WAVE

Defl/CSI Criteria

PP Deflection in	loc	L/defl	L/#
VERT(LL): -0.132	B	75	360
VERT(CL): -0.144	B	68	240
HORZ(LL): 0.053	E	-	-
HORZ(TL): 0.056	E	-	-

Creep Factor: 2.0
Max TC CSI: 0.828
Max BC CSI: 0.776
Max Web CSI: 0.250
Mfg Specified Camber:

VIEW Ver: 23.02.01A.1204.18

▲ Maximum Reactions (lbs)

Loc	Gravity R+	Gravity / R-	/ Rh	Non-Gravity / Rw	/ U	/ RL
I	-	/-	/361	/-	/-	/1228
J	680	/-	/361	/871	/1780	/831
F	-	/-81	/-	/292	/140	/-
E	40	/-72	/-	/147	/140	/-

Wind reactions based on C&C
I Brg Wid = 1.5 Min Req = -
J Brg Wid = 8.0 Min Req = 1.5 (Truss)
F Brg Wid = 1.5 Min Req = -
E Brg Wid = 1.5 Min Req = -
Bearing J is a rigid surface.

Maximum Top Chord Forces Per Ply (lbs)

Chords	Tens.	Comp.	Chords	Tens.	Comp.
A - B	595	- 1142	C - D	153	- 445
B - C	614	- 1112	D - E	46	- 62

Maximum Bot Chord Forces Per Ply (lbs)

Chords	Tens.	Comp.	Chords	Tens.	Comp.
C - G	508	- 703	G - F	0	0

Maximum Web Forces Per Ply (lbs)

Webs	Tens.	Comp.	Webs	Tens.	Comp.
A - H	1235	- 609	H - I	1228	- 601
B - H	243	- 263	D - G	1133	- 478

Lumber
Top chord: 2x4 SP #2;
Bot chord: 2x4 SP #2;
Webs: 2x4 SP #2;
Lt Level Return: 2x4 SP #2;

Plating Notes
(**) 2 plate(s) require special positioning. Refer to scaled plate plot details for special positioning requirements.

Wind
Member design based on both MWFRS and C&C.
Left end vertical not exposed to wind pressure.
Wind loading based on both gable and hip roof types.

Additional Notes
The maximum horizontal reaction is 361#
Shim all supports to solid bearing.
***** BEARING ANALOG MODIFIED! *****

****WARNING**** READ AND FOLLOW ALL NOTES ON THIS DRAWING!
****IMPORTANT**** FURNISH THIS DRAWING TO ALL CONTRACTORS INCLUDING THE INSTALLERS

Trusses require extreme care in fabricating, handling, shipping, installing and bracing. Refer to and follow the latest edition of BCSI (Building Component Safety Information, by TPI and SBCA) for safety practices prior to performing these functions. Installers shall provide temporary bracing per BCSI. Unless noted otherwise, top chord shall have properly attached structural sheathing and bottom chord shall have a properly attached rigid ceiling. Locations shown for permanent lateral restraint of webs shall have continuous lateral restraint (CLR), installed with diagonal bracing installed on the CLR per BCSI sections B3, B7, or B10, as applicable. Apply plates to each face of truss and position as shown above and on the Joint Details, unless noted otherwise. Refer to drawings 160A-Z for standard plate positions. Refer to job's General Notes page for additional information.
Alpine, a division of ITW Building Components Group Inc. shall not be responsible for any deviation from this drawing, any failure to build the truss in conformance with ANSI/TPI 1, or for handling, shipping, installation and bracing of trusses. A seal on this drawing or cover page listing this drawing, indicates acceptance of professional engineering responsibility solely for the design shown. The suitability and use of this drawing for any structure is the responsibility of the Building Designer per ANSI/TPI 1 Sec.2.
For more information see these web sites: Alpine: alpineitw.com; TPI: tpinst.org; SBCA: sbcacomponents.com; ICC: iccsafe.org; AWC: awc.org

SEQN: 203837 / T133 / JACK FROM:	Ply: 1 Qty: 6 Wgt: 25.2 lbs	**Job Number:** 24070306 7725 RES. **Truss Label:** JB3P	DRW: ... / ... 07/24/2024

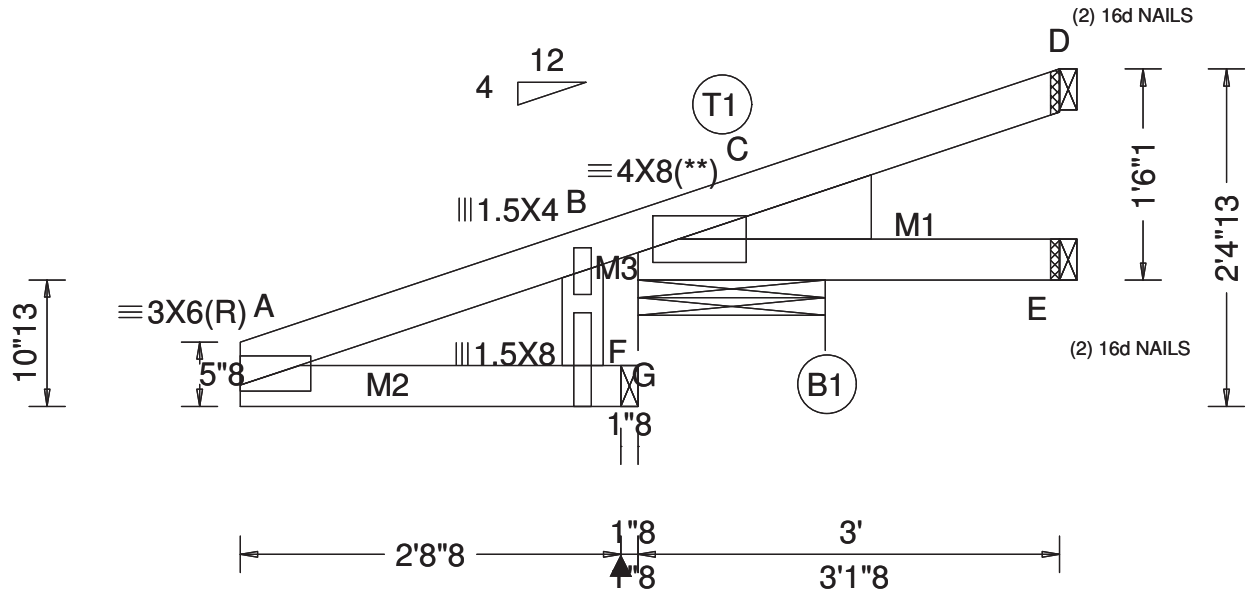

Loading Criteria (psf)

TCLL:	30.00
TCDL:	15.00
BCLL:	0.00
BCDL:	10.00
Des Ld:	55.00
NCBCLL:	10.00
Soffit:	2.00

Load Duration: 1.25
Spacing: 24.0 "

Wind Criteria
Wind Std: ASCE 7-22
Speed: 175 mph
Enclosure: Part. Enc.
Risk Category: II
EXP: C Kzt: NA
Mean Height: 15.00 ft
TCDL: 6.0 psf
BCDL: 6.0 psf
MWFRS Parallel Dist: 0 to h/2
C&C Dist a: 3.00 ft
Loc. from endwall: not in 4.50 ft
GCpi: 0.55
Wind Duration: 1.60

Snow Criteria (Pg,Pf in PSF)
Pg: NA Ct: NA CAT: NA
Pf: NA Ce: NA
Lu: NA Cs: NA
Snow Duration: NA

Building Code:
FBC 8th Ed. 2023 Res. HVHZ
TPI Std: 2014
Rep Fac: Yes
FT/RT:20(0)/10(0)
Plate Type(s):
WAVE

Defl/CSI Criteria

PP Deflection in	loc	L/defl	L/#
VERT(LL): NA			
VERT(CL): NA			
HORZ(LL): 0.003	C	-	-
HORZ(TL): 0.003	C	-	-

Creep Factor: 2.0
Max TC CSI: 0.367
Max BC CSI: 0.084
Max Web CSI: 0.000
Mfg Specified Camber:

VIEW Ver: 23.02.01A.1204.18

▲ Maximum Reactions (lbs)

	Gravity			Non-Gravity		
Loc	R+	/ R-	/ Rh	/ Rw	/ U	/ RL
G	-	/-	/265	/-	/-	/879
B	494	/-	/265	/671	/1135	/597
E	30	/-	/-	/56	/62	/-
D	64	/-	/-	/50	/156	/-

Wind reactions based on C&C
G Brg Wid = 1.5 Min Req = -
B Brg Wid = 16.0 Min Req = 1.5 (Truss)
E Brg Wid = 1.5 Min Req = -
D Brg Wid = 1.5 Min Req = -
Bearing B is a rigid surface.

Maximum Top Chord Forces Per Ply (lbs)

Chords	Tens.	Comp.	Chords	Tens.	Comp.
A - B	539	- 821	C - D	20	- 59
B - C	615	- 900			

Maximum Bot Chord Forces Per Ply (lbs)

Chords	Tens.	Comp.
C - E	0	0

Maximum Web Forces Per Ply (lbs)

Webs	Tens.	Comp.	Webs	Tens.	Comp.
A - F	874	- 538	F - G	879	- 534
B - F	200	- 220			

Lumber
Top chord: 2x4 SP #2;
Bot chord: 2x4 SP #2;
Lt Wedge: 2x6 SP #2;Lt Level Return: 2x4 SP #2;

Plating Notes
(**) 1 plate(s) require special positioning. Refer to scaled plate plot details for special positioning requirements.

Wind
Member design based on both MWFRS and C&C.
Wind loading based on both gable and hip roof types.
Left bottom chord exposed to wind.

Additional Notes
The maximum horizontal reaction is 265#
Shim all supports to solid bearing.

****WARNING**** READ AND FOLLOW ALL NOTES ON THIS DRAWING!
****IMPORTANT**** FURNISH THIS DRAWING TO ALL CONTRACTORS INCLUDING THE INSTALLERS
Trusses require extreme care in fabricating, handling, shipping, installing and bracing. Refer to and follow the latest edition of BCSI (Building Component Safety Information, by TPI and SBCA) for safety practices prior to performing these functions. Installers shall provide temporary bracing per BCSI. Unless noted otherwise, top chord shall have properly attached structural sheathing and bottom chord shall have a properly attached rigid ceiling. Locations shown for permanent lateral restraint of webs shall have continuous lateral restraint (CLR), installed with diagonal bracing installed on the CLR per BCSI sections B3, B7, or B10, as applicable. Apply plates to each face of truss and position as shown above and on the Joint Details, unless noted otherwise. Refer to drawings 160A-Z for standard plate positions. Refer to job's General Notes page for additional information.
Alpine, a division of ITW Building Components Group Inc. shall not be responsible for any deviation from this drawing, any failure to build the truss in conformance with ANSI/TPI 1, or for handling, shipping, installation and bracing of trusses. A seal on this drawing or cover page listing this drawing, indicates acceptance of professional engineering responsibility solely for the design shown. The suitability and use of this drawing for any structure is the responsibility of the Building Designer per ANSI/TPI 1 Sec.2.
For more information see these web sites: Alpine: alpineitw.com; TPI: tpinst.org; SBCA: sbcacomponents.com; ICC: iccsafe.org; AWC: awc.org

SEQN: 203851 / T126 / JACK FROM:	Ply: 1 Qty: 10 Wgt: 23.8 lbs	**Job Number:** 24070306 7725 RES. **Truss Label:** JB3AP	DRW: ... / ... 07/24/2024

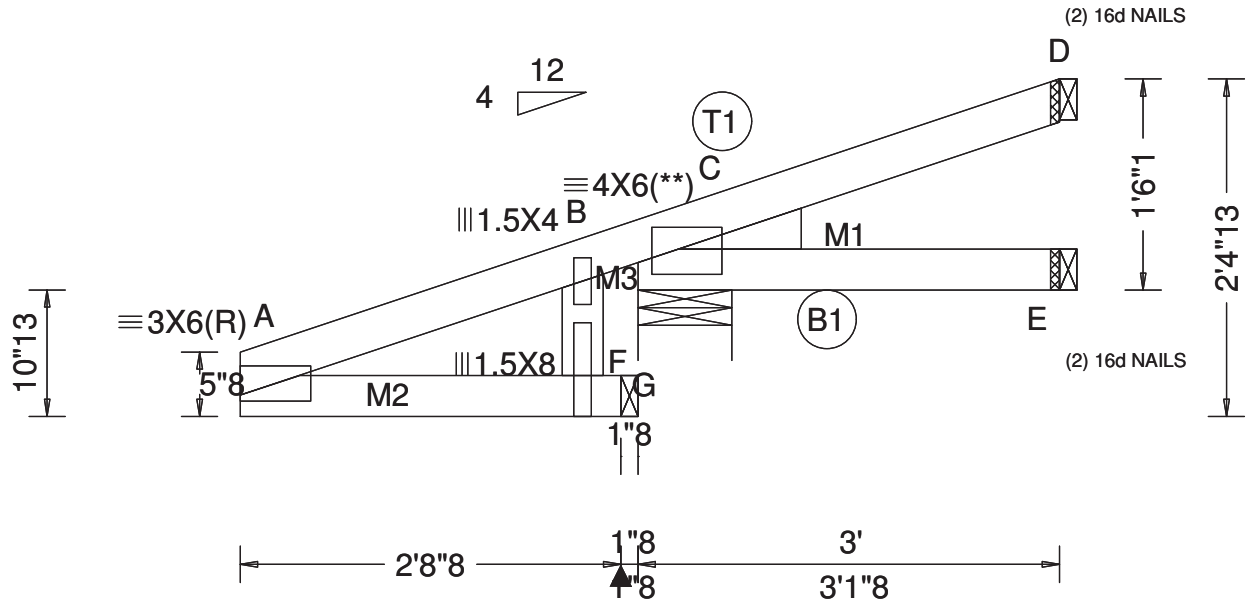

Loading Criteria (psf)

TCLL:	30.00
TCDL:	15.00
BCLL:	0.00
BCDL:	10.00
Des Ld:	55.00
NCBCLL:	10.00
Soffit:	2.00

Load Duration: 1.25
Spacing: 24.0 "

Wind Criteria
Wind Std: ASCE 7-22
Speed: 175 mph
Enclosure: Part. Enc.
Risk Category: II
EXP: C Kzt: NA
Mean Height: 15.00 ft
TCDL: 6.0 psf
BCDL: 6.0 psf
MWFRS Parallel Dist: 0 to h/2
C&C Dist a: 3.00 ft
Loc. from endwall: not in 4.50 ft
GCpi: 0.55
Wind Duration: 1.60

Snow Criteria (Pg,Pf in PSF)
Pg: NA Ct: NA CAT: NA
Pf: NA Ce: NA
Lu: NA Cs: NA
Snow Duration: NA

Building Code:
FBC 8th Ed. 2023 Res. HVHZ
TPI Std: 2014
Rep Fac: Yes
FT/RT:20(0)/10(0)
Plate Type(s):
WAVE

Defl/CSI Criteria
PP Deflection in loc L/defl L/#
VERT(LL): NA
VERT(CL): NA
HORZ(LL): 0.003 C - -
HORZ(TL): 0.003 C - -
Creep Factor: 2.0
Max TC CSI: 0.390
Max BC CSI: 0.115
Max Web CSI: 0.000
Mfg Specified Camber:

VIEW Ver: 23.02.01A.1204.18

▲ Maximum Reactions (lbs)

	Gravity			Non-Gravity		
Loc	R+	/ R-	/ Rh	/ Rw	/ U	/ RL
G	-	/-	/266	/-	/-	/867
B	465	/-	/266	/667	/1111	/585
E	45	/-	/-	/77	/80	/-
D	96	/-	/-	/73	/220	/-

Wind reactions based on C&C
G Brg Wid = 1.5 Min Req = -
B Brg Wid = 8.0 Min Req = 1.5 (Truss)
E Brg Wid = 1.5 Min Req = -
D Brg Wid = 1.5 Min Req = -
Bearing B is a rigid surface.

Maximum Top Chord Forces Per Ply (lbs)

Chords	Tens.	Comp.	Chords	Tens.	Comp.
A - B	535	- 811	C - D	30	- 83
B - C	611	- 889			

Maximum Bot Chord Forces Per Ply (lbs)

Chords	Tens.	Comp.
C - E	0	0

Maximum Web Forces Per Ply (lbs)

Webs	Tens.	Comp.	Webs	Tens.	Comp.
A - F	863	- 535	F - G	867	- 530
B - F	199	- 219			

Lumber
Top chord: 2x4 SP #2;
Bot chord: 2x4 SP #2;
Lt Wedge: 2x4 SP #2;Lt Level Return: 2x4 SP #2;

Plating Notes
(**) 1 plate(s) require special positioning. Refer to scaled plate plot details for special positioning requirements.

Wind
Member design based on both MWFRS and C&C.
Wind loading based on both gable and hip roof types.
Left bottom chord exposed to wind.

Additional Notes
The maximum horizontal reaction is 266#
Shim all supports to solid bearing.
***** BEARING ANALOG MODIFIED! *****

****WARNING**** READ AND FOLLOW ALL NOTES ON THIS DRAWING!
****IMPORTANT**** FURNISH THIS DRAWING TO ALL CONTRACTORS INCLUDING THE INSTALLERS
Trusses require extreme care in fabricating, handling, shipping, installing and bracing. Refer to and follow the latest edition of BCSI (Building Component Safety Information, by TPI and SBCA) for safety practices prior to performing these functions. Installers shall provide temporary bracing per BCSI. Unless noted otherwise, top chord shall have properly attached structural sheathing and bottom chord shall have a properly attached rigid ceiling. Locations shown for permanent lateral restraint of webs shall have continuous lateral restraint (CLR), installed with diagonal bracing installed on the CLR per BCSI sections B3, B7, or B10, as applicable. Apply plates to each face of truss and position as shown above and on the Joint Details, unless noted otherwise. Refer to drawings 160A-Z for standard plate positions. Refer to job's General Notes page for additional information.
Alpine, a division of ITW Building Components Group Inc. shall not be responsible for any deviation from this drawing, any failure to build the truss in conformance with ANSI/TPI 1, or for handling, shipping, installation and bracing of trusses. A seal on this drawing or cover page listing this drawing, indicates acceptance of professional engineering responsibility solely for the design shown. The suitability and use of this drawing for any structure is the responsibility of the Building Designer per ANSI/TPI 1 Sec.2.
For more information see these web sites: Alpine: alpineitw.com; TPI: tpinst.org; SBCA: sbcacomponents.com; ICC: iccsafe.org; AWC: awc.org

SEQN: 203845 / T138 / JACK FROM:	Ply: 1 Qty: 2 Wgt: 25.2 lbs	**Job Number:** 24070306 7725 RES. **Truss Label:** JB3BP	DRW: ... / ... 07/24/2024

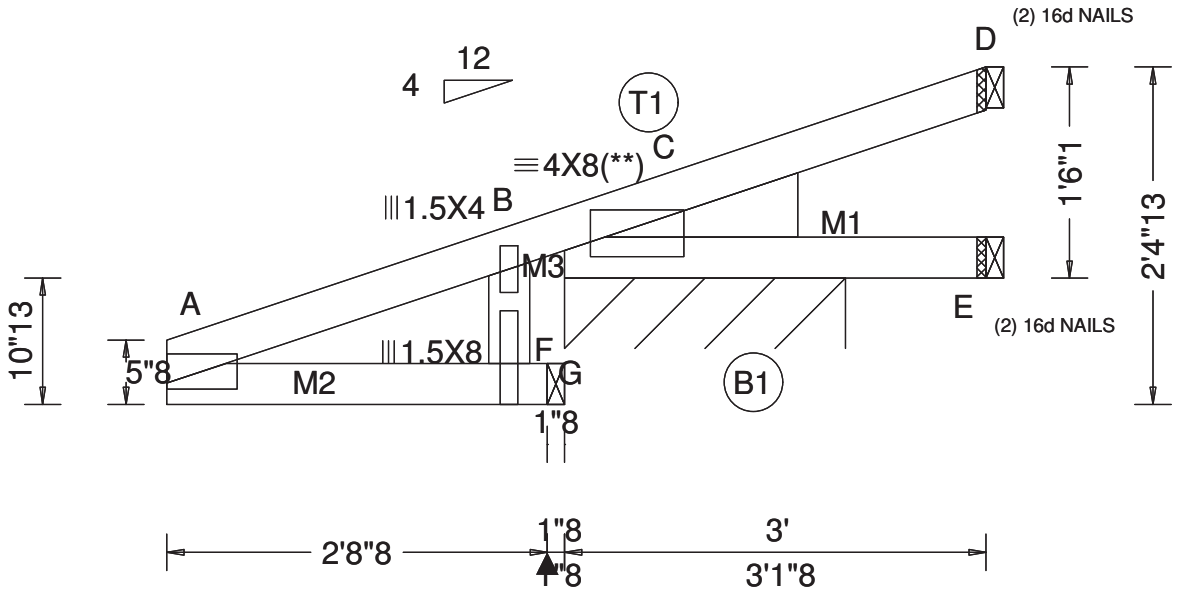

Loading Criteria (psf)

TCLL:	30.00
TCDL:	15.00
BCLL:	0.00
BCDL:	10.00
Des Ld:	55.00
NCBCLL:	10.00
Soffit:	2.00

Load Duration: 1.25
Spacing: 24.0 "

Wind Criteria
Wind Std: ASCE 7-22
Speed: 175 mph
Enclosure: Part. Enc.
Risk Category: II
EXP: C Kzt: NA
Mean Height: 21.03 ft
TCDL: 6.0 psf
BCDL: 6.0 psf
MWFRS Parallel Dist: 0 to h/2
C&C Dist a: 3.00 ft
Loc. from endwall: not in 4.50 ft
GCpi: 0.55
Wind Duration: 1.60

Snow Criteria (Pg,Pf in PSF)
Pg: NA Ct: NA CAT: NA
Pf: NA Ce: NA
Lu: NA Cs: NA
Snow Duration: NA

Building Code:
FBC 8th Ed. 2023 Res. HVHZ
TPI Std: 2014
Rep Fac: Yes
FT/RT:20(0)/10(0)
Plate Type(s):
WAVE

Defl/CSI Criteria

PP Deflection in	loc	L/defl	L/#
VERT(LL): NA			
VERT(CL): NA			
HORZ(LL): 0.003	C	-	-
HORZ(TL): 0.003	C	-	-

Creep Factor: 2.0
Max TC CSI: 0.392
Max BC CSI: 0.088
Max Web CSI: 0.000
Mfg Specified Camber:

VIEW Ver: 23.02.01A.1204.18

▲ Maximum Reactions (lbs), or *=PLF

Loc	R+	/ R-	/ Rh	/ Rw	/ U	/ RL
	Gravity			Non-Gravity		
G	-	/-	/265	/-	/-	/947
B*	258	/-	/132	/347	/626	/323
E	9	/-5	/-	/54	/55	/-
D	63	/-	/-	/51	/167	/-

Wind reactions based on C&C
G Brg Wid = 1.5 Min Req = -
B Brg Wid = 24.0 Min Req = -
E Brg Wid = 1.5 Min Req = -
D Brg Wid = 1.5 Min Req = -
Bearing B is a rigid surface.

Maximum Top Chord Forces Per Ply (lbs)

Chords	Tens.	Comp.	Chords	Tens.	Comp.
A - B	558	- 885	C - D	20	- 63
B - C	638	- 971			

Maximum Bot Chord Forces Per Ply (lbs)

Chords	Tens.	Comp.
C - E	21	- 32

Maximum Web Forces Per Ply (lbs)

Webs	Tens.	Comp.	Webs	Tens.	Comp.
A - F	942	- 558	F - G	947	- 553
B - F	210	- 237			

Lumber
Top chord: 2x4 SP #2;
Bot chord: 2x4 SP #2;
Lt Wedge: 2x6 SP #2;Lt Level Return: 2x4 SP #2;

Plating Notes
All plates are 3X6(R) except as noted.
(**) 1 plate(s) require special positioning. Refer to scaled plate plot details for special positioning requirements.

Wind
Member design based on both MWFRS and C&C.
Wind loading based on both gable and hip roof types.
Left bottom chord exposed to wind.

Additional Notes
The maximum horizontal reaction is 265#
Shim all supports to solid bearing.
***** BEARING ANALOG MODIFIED! *****

****WARNING**** READ AND FOLLOW ALL NOTES ON THIS DRAWING!
****IMPORTANT**** FURNISH THIS DRAWING TO ALL CONTRACTORS INCLUDING THE INSTALLERS

Trusses require extreme care in fabricating, handling, shipping, installing and bracing. Refer to and follow the latest edition of BCSI (Building Component Safety Information, by TPI and SBCA) for safety practices prior to performing these functions. Installers shall provide temporary bracing per BCSI. Unless noted otherwise, top chord shall have properly attached structural sheathing and bottom chord shall have a properly attached rigid ceiling. Locations shown for permanent lateral restraint of webs shall have continuous lateral restraint (CLR), installed with diagonal bracing installed on the CLR per BCSI sections B3, B7, or B10, as applicable. Apply plates to each face of truss and position as shown above and on the Joint Details, unless noted otherwise. Refer to drawings 160A-Z for standard plate positions. Refer to job's General Notes page for additional information.
Alpine, a division of ITW Building Components Group Inc. shall not be responsible for any deviation from this drawing, any failure to build the truss in conformance with ANSI/TPI 1, or for handling, shipping, installation and bracing of trusses. A seal on this drawing or cover page listing this drawing, indicates acceptance of professional engineering responsibility solely for the design shown. The suitability and use of this drawing for any structure is the responsibility of the Building Designer per ANSI/TPI 1 Sec.2.
For more information see these web sites: Alpine: alpineitw.com; TPI: tpinst.org; SBCA: sbcacomponents.com; ICC: iccsafe.org; AWC: awc.org

SEQN: 203848 / T37 / JACK FROM:	Ply: 1 Qty: 14 Wgt: 16.8 lbs	**Job Number:** 24070306 7725 RES. **Truss Label:** JB1	DRW: ... / ... 07/24/2024

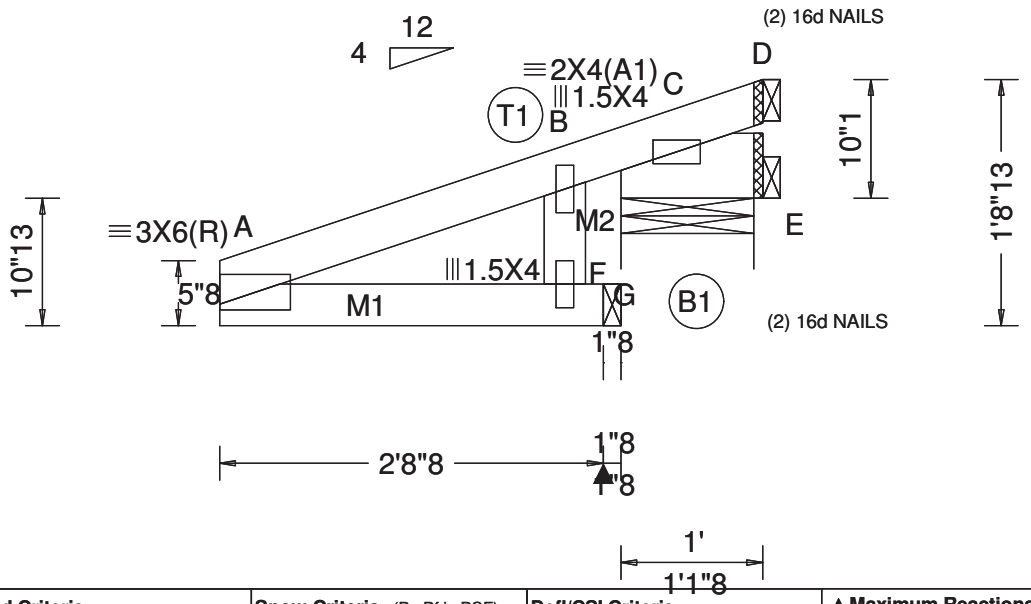

Loading Criteria (psf)

TCLL:	30.00
TCDL:	15.00
BCLL:	0.00
BCDL:	10.00
Des Ld:	55.00
NCBCLL:	10.00
Soffit:	2.00

Load Duration: 1.25
Spacing: 24.0 "

Wind Criteria
Wind Std: ASCE 7-22
Speed: 175 mph
Enclosure: Closed
Risk Category: II
EXP: C Kzt: NA
Mean Height: 15.00 ft
TCDL: 6.0 psf
BCDL: 6.0 psf
MWFRS Parallel Dist: 0 to h/2
C&C Dist a: 3.00 ft
Loc. from endwall: Any
GCpi: 0.18
Wind Duration: 1.60

Snow Criteria (Pg,Pf in PSF)
Pg: NA Ct: NA CAT: NA
Pf: NA Ce: NA
Lu: NA Cs: NA
Snow Duration: NA

Building Code:
FBC 8th Ed. 2023 Res. HVHZ
TPI Std: 2014
Rep Fac: Yes
FT/RT:20(0)/10(0)
Plate Type(s):
WAVE

Defl/CSI Criteria
PP Deflection in loc L/defl L/#
VERT(LL): NA
VERT(CL): NA
HORZ(LL): 0.001 E - -
HORZ(TL): 0.001 E - -
Creep Factor: 2.0
Max TC CSI: 0.315
Max BC CSI: 0.027
Max Web CSI: 0.000
Mfg Specified Camber:

VIEW Ver: 23.02.01A.1204.18

▲ Maximum Reactions (lbs)

	Gravity			Non-Gravity		
Loc	R+	/ R-	/ Rh	/ Rw	/ U	/ RL
G	-	/-	/260	/-	/-	/699
B	425	/-	/260	/389	/982	/417
E	3	/-23	/-	/86	/29	/-
D	-	/-42	/-	/127	/53	/-

Wind reactions based on C&C
G Brg Wid = 1.5 Min Req = -
B Brg Wid = 11.2 Min Req = 1.5 (Truss)
E Brg Wid = 1.5 Min Req = -
D Brg Wid = 1.5 Min Req = -
Bearing B is a rigid surface.

Maximum Top Chord Forces Per Ply (lbs)

Chords	Tens.	Comp.	Chords	Tens.	Comp.
A - B	297	-619	C - D	40	-21
B - C	326	-645			

Maximum Bot Chord Forces Per Ply (lbs)

Chords	Tens.	Comp.
C - E	0	0

Maximum Web Forces Per Ply (lbs)

Webs	Tens.	Comp.	Webs	Tens.	Comp.
A - F	685	-271	F - G	699	-273
B - F	56	-53			

Lumber
Top chord: 2x4 SP #2;
Bot chord: 2x6 SP #2;
Lt Level Return: 2x4 SP #2;

Wind
Member design based on both MWFRS and C&C.
Wind loading based on both gable and hip roof types.

Additional Notes
The maximum horizontal reaction is 260#
Shim all supports to solid bearing.

****WARNING**** READ AND FOLLOW ALL NOTES ON THIS DRAWING!
****IMPORTANT**** FURNISH THIS DRAWING TO ALL CONTRACTORS INCLUDING THE INSTALLERS
Trusses require extreme care in fabricating, handling, shipping, installing and bracing. Refer to and follow the latest edition of BCSI (Building Component Safety Information, by TPI and SBCA) for safety practices prior to performing these functions. Installers shall provide temporary bracing per BCSI. Unless noted otherwise, top chord shall have properly attached structural sheathing and bottom chord shall have a properly attached rigid ceiling. Locations shown for permanent lateral restraint of webs shall have continuous lateral restraint (CLR), installed with diagonal bracing installed on the CLR per BCSI sections B3, B7, or B10, as applicable. Apply plates to each face of truss and position as shown above and on the Joint Details, unless noted otherwise. Refer to drawings 160A-Z for standard plate positions. Refer to job's General Notes page for additional information.
Alpine, a division of ITW Building Components Group Inc. shall not be responsible for any deviation from this drawing, any failure to build the truss in conformance with ANSI/TPI 1, or for handling, shipping, installation and bracing of trusses. A seal on this drawing or cover page listing this drawing, indicates acceptance of professional engineering responsibility solely for the design shown. The suitability and use of this drawing for any structure is the responsibility of the Building Designer per ANSI/TPI 1 Sec.2.
For more information see these web sites: Alpine: alpineitw.com; TPI: tpinst.org; SBCA: sbcacomponents.com; ICC: iccsafe.org; AWC: awc.org

SEQN: 203856 / T42 / JACK FROM:	Ply: 1 Qty: 22 Wgt: 16.8 lbs	**Job Number:** 24070306 7725 RES. **Truss Label:** JB1A	DRW: ... / ... 07/18/2024

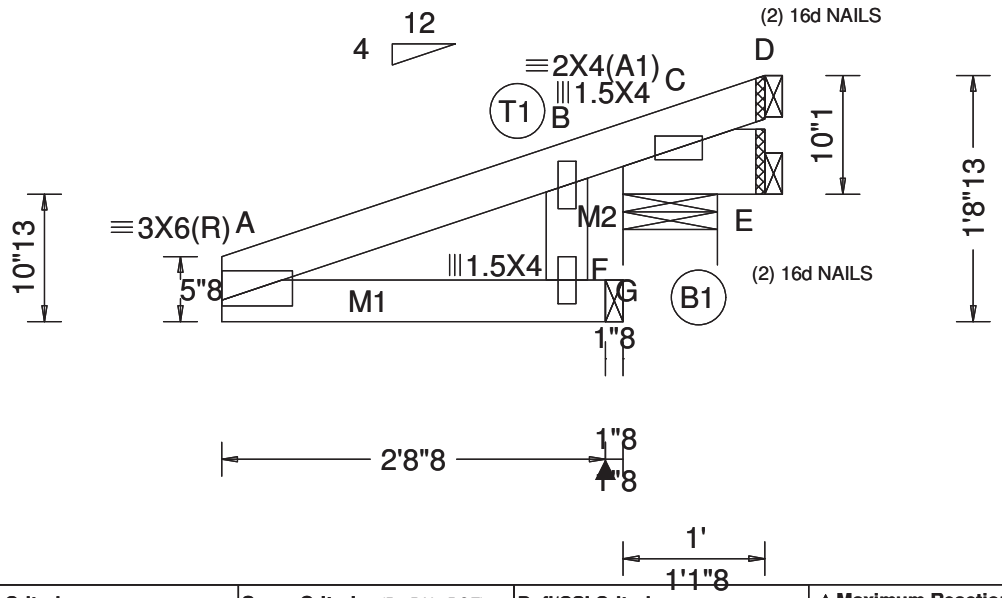

Loading Criteria (psf)

TCLL:	30.00
TCDL:	15.00
BCLL:	0.00
BCDL:	10.00
Des Ld:	55.00
NCBCLL:	10.00
Soffit:	2.00

Load Duration: 1.25
Spacing: 24.0 "

Wind Criteria
Wind Std: ASCE 7-22
Speed: 175 mph
Enclosure: Part. Enc.
Risk Category: II
EXP: C Kzt: NA
Mean Height: 15.00 ft
TCDL: 6.0 psf
BCDL: 6.0 psf
MWFRS Parallel Dist: 0 to h/2
C&C Dist a: 3.00 ft
Loc. from endwall: Any
GCpi: 0.55
Wind Duration: 1.60

Snow Criteria (Pg,Pf in PSF)
Pg: NA Ct: NA CAT: NA
Pf: NA Ce: NA
Lu: NA Cs: NA
Snow Duration: NA

Building Code:
FBC 8th Ed. 2023 Res. HVHZ
TPI Std: 2014
Rep Fac: Yes
FT/RT:20(0)/10(0)
Plate Type(s):
WAVE

Defl/CSI Criteria

PP Deflection in	loc	L/defl	L/#
VERT(LL):	NA		
VERT(CL):	NA		
HORZ(LL):	0.001 E	-	-
HORZ(TL):	0.001 E	-	-

Creep Factor: 2.0
Max TC CSI: 0.338
Max BC CSI: 0.027
Max Web CSI: 0.000
Mfg Specified Camber:

VIEW Ver: 23.02.01A.1204.18

▲ Maximum Reactions (lbs)

	Gravity			Non-Gravity		
Loc	R+	/ R-	/ Rh	/ Rw	/ U	/ RL
G	-	/-	/260	/-	/-	/699
B	425	/-	/260	/400	/1081	/425
E	3	/-23	/-	/90	/33	/-
D	-	/-42	/-	/134	/56	/-

Wind reactions based on C&C
G Brg Wid = 1.5 Min Req = -
B Brg Wid = 8.0 Min Req = 1.5 (Truss)
E Brg Wid = 1.5 Min Req = -
D Brg Wid = 1.5 Min Req = -
Bearing B is a rigid surface.

Maximum Top Chord Forces Per Ply (lbs)

Chords	Tens.	Comp.	Chords	Tens.	Comp.
A - B	297	-619	C - D	42	-21
B - C	326	-645			

Maximum Bot Chord Forces Per Ply (lbs)

Chords	Tens.	Comp.
C - E	0	0

Maximum Web Forces Per Ply (lbs)

Webs	Tens.	Comp.	Webs	Tens.	Comp.
A - F	685	-271	F - G	699	-273
B - F	56	-53			

Lumber
Top chord: 2x4 SP #2;
Bot chord: 2x6 SP #2;
Lt Level Return: 2x4 SP #2;

Wind
Member design based on both MWFRS and C&C.
Wind loading based on both gable and hip roof types.

Additional Notes
The maximum horizontal reaction is 260#
Shim all supports to solid bearing.
***** BEARING ANALOG MODIFIED! *****

****WARNING**** READ AND FOLLOW ALL NOTES ON THIS DRAWING!
****IMPORTANT**** FURNISH THIS DRAWING TO ALL CONTRACTORS INCLUDING THE INSTALLERS
Trusses require extreme care in fabricating, handling, shipping, installing and bracing. Refer to and follow the latest edition of BCSI (Building Component Safety Information, by TPI and SBCA) for safety practices prior to performing these functions. Installers shall provide temporary bracing per BCSI. Unless noted otherwise, top chord shall have properly attached structural sheathing and bottom chord shall have a properly attached rigid ceiling. Locations shown for permanent lateral restraint of webs shall have continuous lateral restraint (CLR), installed with diagonal bracing installed on the CLR per BCSI sections B3, B7, or B10, as applicable. Apply plates to each face of truss and position as shown above and on the Joint Details, unless noted otherwise. Refer to drawings 160A-Z for standard plate positions. Refer to job's General Notes page for additional information.
Alpine, a division of ITW Building Components Group Inc. shall not be responsible for any deviation from this drawing, any failure to build the truss in conformance with ANSI/TPI 1, or for handling, shipping, installation and bracing of trusses. A seal on this drawing or cover page listing this drawing, indicates acceptance of professional engineering responsibility solely for the design shown. The suitability and use of this drawing for any structure is the responsibility of the Building Designer per ANSI/TPI 1 Sec.2.
For more information see these web sites: Alpine: alpineitw.com; TPI: tpinst.org; SBCA: sbcacomponents.com; ICC: iccsafe.org; AWC: awc.org

SEQN: 203864 / T51 / JACK FROM:	Ply: 1 Qty: 8 Wgt: 18.2 lbs	**Job Number:** 24070306 7725 RES. **Truss Label:** JB1B	DRW: ... / ... 07/18/2024

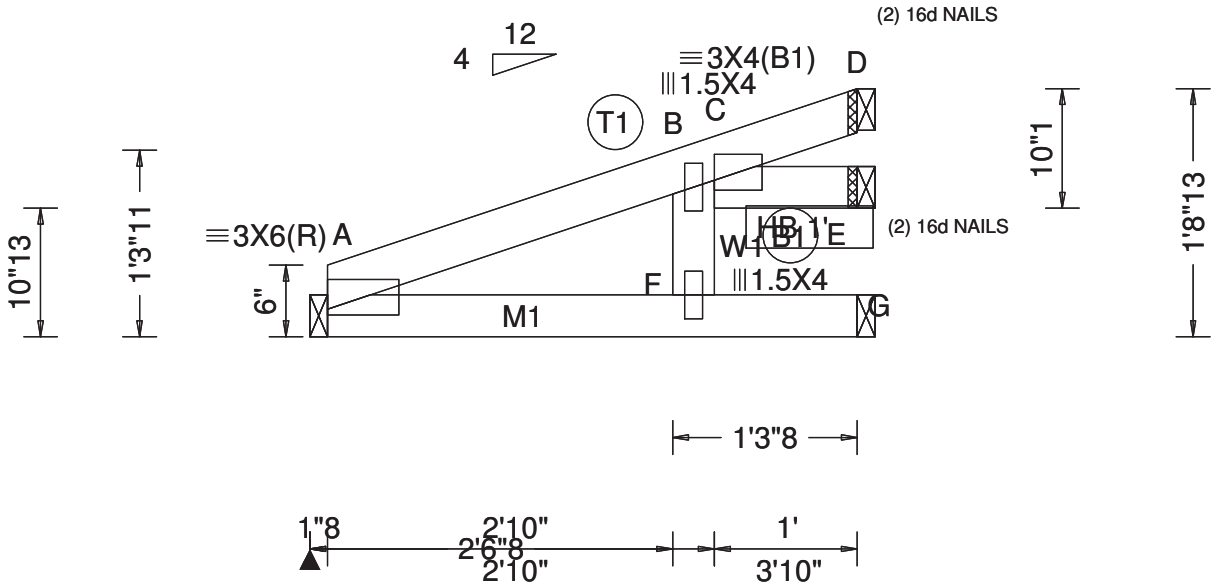

Loading Criteria (psf)		**Wind Criteria**	**Snow Criteria** (Pg,Pf in PSF)	**Defl/CSI Criteria**
TCLL:	30.00	Wind Std: ASCE 7-22	Pg: NA Ct: NA CAT: NA	PP Deflection in loc L/defl L/#
TCDL:	15.00	Speed: 175 mph	Pf: NA Ce: NA	VERT(LL): -0.010 B 999 360
BCLL:	0.00	Enclosure: Part. Enc.	Lu: NA Cs: NA	VERT(CL): 0.009 B 999 240
BCDL:	10.00	Risk Category: II	Snow Duration: NA	HORZ(LL): 0.003 D - -
Des Ld:	55.00	EXP: C Kzt: NA	Building Code:	HORZ(TL): 0.003 D - -
NCBCLL:	10.00	Mean Height: 15.00 ft	FBC 8th Ed. 2023 Res. HVHZ	Creep Factor: 2.0
Soffit:	2.00	TCDL: 6.0 psf	TPI Std: 2014	Max TC CSI: 0.332
Load Duration: 1.25		BCDL: 6.0 psf	Rep Fac: Yes	Max BC CSI: 0.137
Spacing: 24.0 "		MWFRS Parallel Dist: 0 to h/2	FT/RT:20(0)/10(0)	Max Web CSI: 0.020
		C&C Dist a: 3.00 ft	Plate Type(s):	Mfg Specified Camber:
		Loc. from endwall: Any	WAVE	VIEW Ver: 23.02.01A.1204.18
		GCpi: 0.55		
		Wind Duration: 1.60		

▲ Maximum Reactions (lbs)

	Gravity			Non-Gravity		
Loc	R+	/ R-	/ Rh	/ Rw	/ U	/ RL
A	258	/-	/-	/256	/503	/-
E	37	/-	/373	/41	/85	/851
D	49	/-	/-	/44	/109	/-
G	-	/-	/373	/-	/-	/585

Wind reactions based on C&C

A	Brg Wid = 1.5	Min Req =	-
E	Brg Wid = 1.5	Min Req =	-
D	Brg Wid = 1.5	Min Req =	-
G	Brg Wid = 1.5	Min Req =	-

Maximum Top Chord Forces Per Ply (lbs)

Chords	Tens.	Comp.	Chords	Tens.	Comp.
A - B	707	- 424	C - D	18	- 40
B - C	773	- 395			

Maximum Bot Chord Forces Per Ply (lbs)

Chords	Tens.	Comp.
C - E	856	- 414

Maximum Web Forces Per Ply (lbs)

Webs	Tens.	Comp.	Webs	Tens.	Comp.
A - F	372	- 589	F - G	373	- 585
B - F	105	- 10			

Lumber

Top chord: 2x4 SP #2;
Bot chord: 2x4 SP #2;
Webs: 2x4 SP #2;
Lt Level Return: 2x4 SP #2;

Wind

Member design based on both MWFRS and C&C.

Wind loading based on both gable and hip roof types.

Additional Notes

The maximum horizontal reaction is 373#

Shim all supports to solid bearing.

***** BEARING ANALOG MODIFIED! *****

****WARNING**** READ AND FOLLOW ALL NOTES ON THIS DRAWING!
****IMPORTANT**** FURNISH THIS DRAWING TO ALL CONTRACTORS INCLUDING THE INSTALLERS

Trusses require extreme care in fabricating, handling, shipping, installing and bracing. Refer to and follow the latest edition of BCSI (Building Component Safety Information, by TPI and SBCA) for safety practices prior to performing these functions. Installers shall provide temporary bracing per BCSI. Unless noted otherwise, top chord shall have properly attached structural sheathing and bottom chord shall have a properly attached rigid ceiling. Locations shown for permanent lateral restraint of webs shall have continuous lateral restraint (CLR), installed with diagonal bracing installed on the CLR per BCSI sections B3, B7, or B10, as applicable. Apply plates to each face of truss and position as shown above and on the Joint Details, unless noted otherwise. Refer to drawings 160A-Z for standard plate positions. Refer to job's General Notes page for additional information.

Alpine, a division of ITW Building Components Group Inc. shall not be responsible for any deviation from this drawing, any failure to build the truss in conformance with ANSI/TPI 1, or for handling, shipping, installation and bracing of trusses. A seal on this drawing or cover page listing this drawing, indicates acceptance of professional engineering responsibility solely for the design shown. The suitability and use of this drawing for any structure is the responsibility of the Building Designer per ANSI/TPI 1 Sec.2.

For more information see these web sites: Alpine: alpineitw.com; TPI: tpinst.org; SBCA: sbcacomponents.com; ICC: iccsafe.org; AWC: awc.org

SEQN: 203867 / T65 / JACK FROM:	Ply: 1 Qty: 4 Wgt: 7.0 lbs	**Job Number:** 24070306 7725 RES. **Truss Label:** JB1C	DRW: ... / ... 07/24/2024

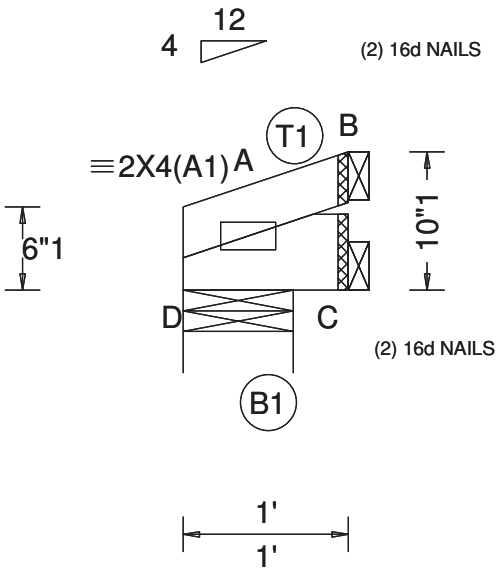

Loading Criteria (psf)

TCLL:	30.00
TCDL:	15.00
BCLL:	0.00
BCDL:	10.00
Des Ld:	55.00
NCBCLL:	10.00
Soffit:	2.00

Load Duration: 1.25
Spacing: 24.0 "

Wind Criteria
Wind Std: ASCE 7-22
Speed: 175 mph
Enclosure: Closed
Risk Category: II
EXP: C Kzt: NA
Mean Height: 15.00 ft
TCDL: 6.0 psf
BCDL: 6.0 psf
MWFRS Parallel Dist: 0 to h/2
C&C Dist a: 3.00 ft
Loc. from endwall: Any
GCpi: 0.18
Wind Duration: 1.60

Snow Criteria (Pg,Pf in PSF)
Pg: NA Ct: NA CAT: NA
Pf: NA Ce: NA
Lu: NA Cs: NA
Snow Duration: NA

Building Code:
FBC 8th Ed. 2023 Res. HVHZ
TPI Std: 2014
Rep Fac: Yes
FT/RT:20(0)/10(0)
Plate Type(s):
WAVE

Defl/CSI Criteria
PP Deflection in loc L/defl L/#
VERT(LL): NA
VERT(CL): NA
HORZ(LL): -0.000 C - -
HORZ(TL): 0.000 C - -
Creep Factor: 2.0
Max TC CSI: 0.027
Max BC CSI: 0.006
Max Web CSI: 0.000
Mfg Specified Camber:

VIEW Ver: 23.02.01A.1204.18

▲ Maximum Reactions (lbs)

	Gravity			Non-Gravity		
Loc	R+	/ R-	/ Rh	/ Rw	/ U	/ RL
D	64	/-	/-	/39	/102	/82
C	21	/-	/-	/16	/43	/-
B	25	/-	/-	/16	/76	/-

Wind reactions based on C&C
D Brg Wid = 8.0 Min Req = 1.5 (Truss)
C Brg Wid = 1.5 Min Req = -
B Brg Wid = 1.5 Min Req = -
Bearing D is a rigid surface.

Maximum Top Chord Forces Per Ply (lbs)

Chords	Tens.	Comp.
A - B	8	-25

Maximum Bot Chord Forces Per Ply (lbs)

Chords	Tens.	Comp.
A - C	0	0

Lumber
Top chord: 2x4 SP #2;
Bot chord: 2x6 SP #2;

Wind
Member design based on both MWFRS and C&C.
Wind loading based on both gable and hip roof types.

****WARNING**** READ AND FOLLOW ALL NOTES ON THIS DRAWING!
****IMPORTANT**** FURNISH THIS DRAWING TO ALL CONTRACTORS INCLUDING THE INSTALLERS
Trusses require extreme care in fabricating, handling, shipping, installing and bracing. Refer to and follow the latest edition of BCSI (Building Component Safety Information, by TPI and SBCA) for safety practices prior to performing these functions. Installers shall provide temporary bracing per BCSI. Unless noted otherwise, top chord shall have properly attached structural sheathing and bottom chord shall have a properly attached rigid ceiling. Locations shown for permanent lateral restraint of webs shall have continuous lateral restraint (CLR), installed with diagonal bracing installed on the CLR per BCSI sections B3, B7, or B10, as applicable. Apply plates to each face of truss and position as shown above and on the Joint Details, unless noted otherwise. Refer to drawings 160A-Z for standard plate positions. Refer to job's General Notes page for additional information.
Alpine, a division of ITW Building Components Group Inc. shall not be responsible for any deviation from this drawing, any failure to build the truss in conformance with ANSI/TPI 1, or for handling, shipping, installation and bracing of trusses. A seal on this drawing or cover page listing this drawing, indicates acceptance of professional engineering responsibility solely for the design shown. The suitability and use of this drawing for any structure is the responsibility of the Building Designer per ANSI/TPI 1 Sec.2.
For more information see these web sites: Alpine: alpineitw.com; TPI: tpinst.org; SBCA: sbcacomponents.com; ICC: iccsafe.org; AWC: awc.org

SEQN: 139525 / T109 / VAL FROM:	Ply: 1 Qty: 1 Wgt: 71.4 lbs	**Job Number:** 24070306 7725 RES. **Truss Label:** VMH18	DRW: ... / ... 07/24/2024

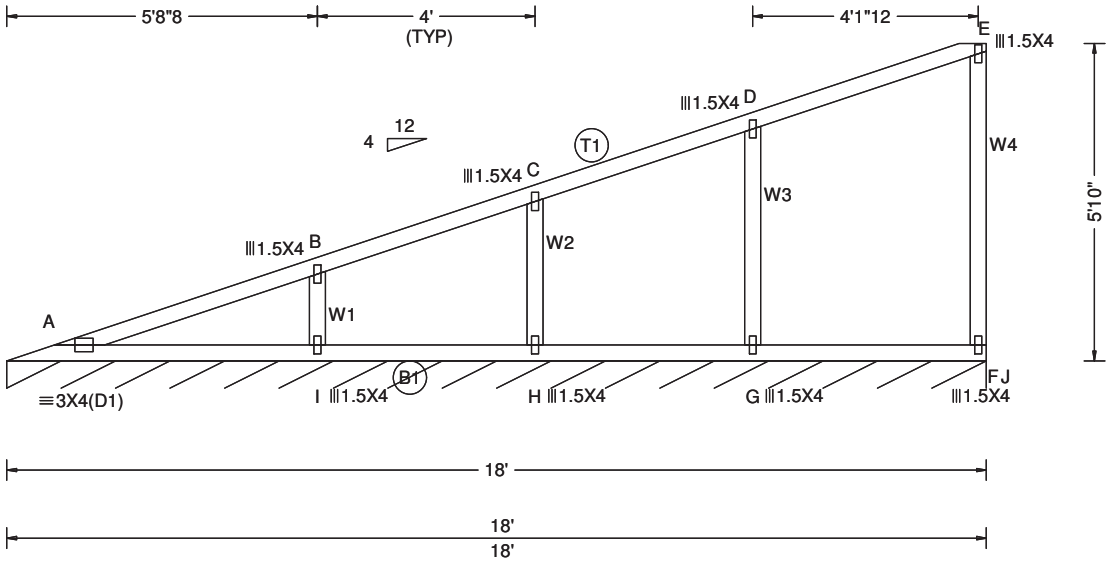

Loading Criteria (psf)

TCLL:	30.00
TCDL:	15.00
BCLL:	0.00
BCDL:	10.00
Des Ld:	55.00
NCBCLL:	10.00
Soffit:	2.00

Load Duration: 1.25
Spacing: 24.0 "

Wind Criteria
Wind Std: ASCE 7-22
Speed: 175 mph
Enclosure: Closed
Risk Category: II
EXP: C Kzt: NA
Mean Height: 16.40 ft
TCDL: 6.0 psf
BCDL: 6.0 psf
MWFRS Parallel Dist: h to 2h
C&C Dist a: 3.00 ft
Loc. from endwall: not in 9.00 ft
GCpi: 0.18
Wind Duration: 1.60

Snow Criteria (Pg,Pf in PSF)
Pg: NA Ct: NA CAT: NA
Pf: NA Ce: NA
Lu: NA Cs: NA
Snow Duration: NA

Building Code:
FBC 8th Ed. 2023 Res. HVHZ
TPI Std: 2014
Rep Fac: Yes
FT/RT:20(0)/10(0)
Plate Type(s):
WAVE

Defl/CSI Criteria

PP Deflection in	loc	L/defl	L/#
VERT(LL): 0.045	A	999	360
VERT(CL): 0.083	A	999	240
HORZ(LL): -0.010	A	-	-
HORZ(TL): 0.014	A	-	-

Creep Factor: 2.0
Max TC CSI: 0.525
Max BC CSI: 0.317
Max Web CSI: 0.142
Mfg Specified Camber:

VIEW Ver: 23.02.01A.1204.18

▲ Maximum Reactions (lbs), or *=PLF

	Gravity			Non-Gravity		
Loc	R+	/ R-	/ Rh	/ Rw	/ U	/ RL
J*	110	/-	/-	/68	/48	/24

Wind reactions based on C&C
J Brg Wid = 216 Min Req = -
Bearing A is a rigid surface.

Maximum Top Chord Forces Per Ply (lbs)

Chords	Tens.	Comp.	Chords	Tens.	Comp.
A - B	116	- 379	C - D	61	- 169
B - C	78	- 267	D - E	48	- 75

Maximum Bot Chord Forces Per Ply (lbs)

Chords	Tens.	Comp.	Chords	Tens.	Comp.
A - I	413	- 101	H - G	427	- 108
I - H	422	- 106	G - F	430	- 110

Maximum Web Forces Per Ply (lbs)

Webs	Tens.	Comp.	Webs	Tens.	Comp.
B - I	334	- 457	D - G	351	- 431
C - H	272	- 310	E - F	98	- 157

Lumber
Top chord: 2x4 SP #2;
Bot chord: 2x4 SP #2;
Webs: 2x4 SP #2;

Wind
Member design based on both MWFRS and C&C.
Right end vertical not exposed to wind pressure.
Wind loading based on both gable and hip roof types.

Additional Notes
See DWG VAL180220723 for valley details.

****WARNING**** READ AND FOLLOW ALL NOTES ON THIS DRAWING!
****IMPORTANT**** FURNISH THIS DRAWING TO ALL CONTRACTORS INCLUDING THE INSTALLERS
Trusses require extreme care in fabricating, handling, shipping, installing and bracing. Refer to and follow the latest edition of BCSI (Building Component Safety Information, by TPI and SBCA) for safety practices prior to performing these functions. Installers shall provide temporary bracing per BCSI. Unless noted otherwise, top chord shall have properly attached structural sheathing and bottom chord shall have a properly attached rigid ceiling. Locations shown for permanent lateral restraint of webs shall have continuous lateral restraint (CLR), installed with diagonal bracing installed on the CLR per BCSI sections B3, B7, or B10, as applicable. Apply plates to each face of truss and position as shown above and on the Joint Details, unless noted otherwise. Refer to drawings 160A-Z for standard plate positions. Refer to job's General Notes page for additional information.
Alpine, a division of ITW Building Components Group Inc. shall not be responsible for any deviation from this drawing, any failure to build the truss in conformance with ANSI/TPI 1, or for handling, shipping, installation and bracing of trusses. A seal on this drawing or cover page listing this drawing, indicates acceptance of professional engineering responsibility solely for the design shown. The suitability and use of this drawing for any structure is the responsibility of the Building Designer per ANSI/TPI 1 Sec.2.
For more information see these web sites: Alpine: alpineitw.com; TPI: tpinst.org; SBCA: sbcacomponents.com; ICC: iccsafe.org; AWC: awc.org

SEQN: 139528 / T100 / VAL FROM:	Ply: 1 Qty: 1 Wgt: 64.4 lbs	**Job Number:** 24070306 7725 RES. **Truss Label:** VMH16	DRW: ... / ... 07/24/2024

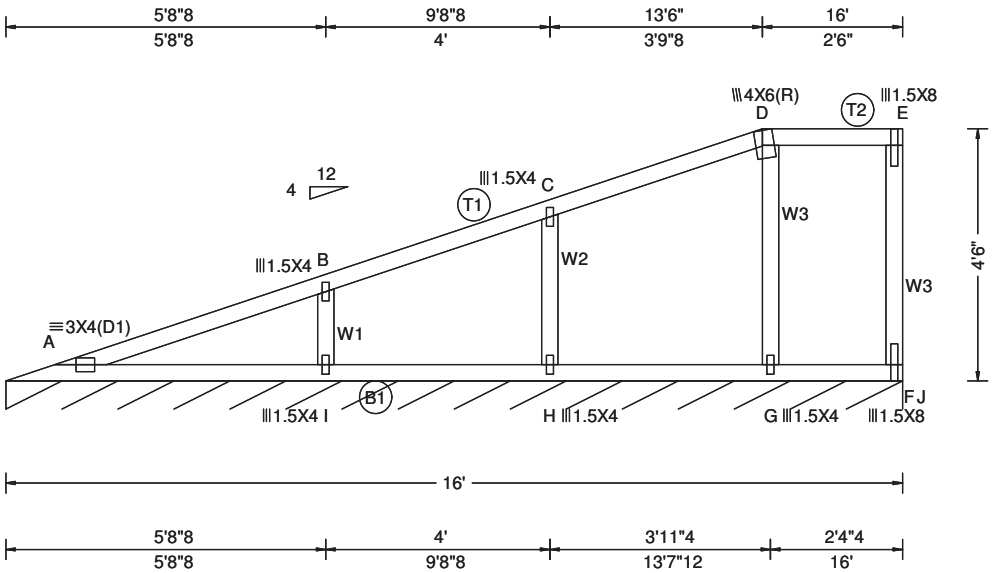

Loading Criteria (psf)

TCLL:	30.00
TCDL:	15.00
BCLL:	0.00
BCDL:	10.00
Des Ld:	55.00
NCBCLL:	10.00
Soffit:	2.00

Load Duration: 1.25
Spacing: 24.0 "

Wind Criteria
Wind Std: ASCE 7-22
Speed: 175 mph
Enclosure: Closed
Risk Category: II
EXP: C Kzt: NA
Mean Height: 16.40 ft
TCDL: 6.0 psf
BCDL: 6.0 psf
MWFRS Parallel Dist: h to 2h
C&C Dist a: 3.00 ft
Loc. from endwall: not in 9.00 ft
GCpi: 0.18
Wind Duration: 1.60

Snow Criteria (Pg,Pf in PSF)
Pg: NA Ct: NA CAT: NA
Pf: NA Ce: NA
Lu: NA Cs: NA
Snow Duration: NA

Building Code:
FBC 8th Ed. 2023 Res. HVHZ
TPI Std: 2014
Rep Fac: Yes
FT/RT:20(0)/10(0)
Plate Type(s):
WAVE

Defl/CSI Criteria

PP Deflection in	loc	L/defl	L/#
VERT(LL): 0.046	A	999	360
VERT(CL): 0.085	A	999	240
HORZ(LL): -0.009	A	-	-
HORZ(TL): 0.014	A	-	-

Creep Factor: 2.0
Max TC CSI: 0.506
Max BC CSI: 0.322
Max Web CSI: 0.079
Mfg Specified Camber:

VIEW Ver: 23.02.01A.1204.18

▲ Maximum Reactions (lbs), or *=PLF

	Gravity			Non-Gravity		
Loc	R+	/ R-	/ Rh	/ Rw	/ U	/ RL
J*	110	/-	/-	/55	/69	/22

Wind reactions based on C&C
J Brg Wid = 192 Min Req = -
Bearing A is a rigid surface.

Maximum Top Chord Forces Per Ply (lbs)

Chords	Tens.	Comp.	Chords	Tens.	Comp.
A - B	93	- 285	C - D	36	- 74
B - C	56	- 164	D - E	0	0

Maximum Bot Chord Forces Per Ply (lbs)

Chords	Tens.	Comp.	Chords	Tens.	Comp.
A - I	329	- 80	H - G	345	- 87
I - H	339	- 85	G - F	356	- 83

Maximum Web Forces Per Ply (lbs)

Webs	Tens.	Comp.	Webs	Tens.	Comp.
B - I	365	- 446	D - G	316	- 251
C - H	347	- 364	E - F	192	- 112

Lumber
Top chord: 2x4 SP #2;
Bot chord: 2x4 SP #2;
Webs: 2x4 SP #2;

Wind
Member design based on both MWFRS and C&C.
Right end vertical not exposed to wind pressure.
Wind loading based on both gable and hip roof types.

Additional Notes
See DWG VAL180220723 for valley details.

****WARNING**** READ AND FOLLOW ALL NOTES ON THIS DRAWING!
****IMPORTANT**** FURNISH THIS DRAWING TO ALL CONTRACTORS INCLUDING THE INSTALLERS
Trusses require extreme care in fabricating, handling, shipping, installing and bracing. Refer to and follow the latest edition of BCSI (Building Component Safety Information, by TPI and SBCA) for safety practices prior to performing these functions. Installers shall provide temporary bracing per BCSI. Unless noted otherwise, top chord shall have properly attached structural sheathing and bottom chord shall have a properly attached rigid ceiling. Locations shown for permanent lateral restraint of webs shall have continuous lateral restraint (CLR), installed with diagonal bracing installed on the CLR per BCSI sections B3, B7, or B10, as applicable. Apply plates to each face of truss and position as shown above and on the Joint Details, unless noted otherwise. Refer to drawings 160A-Z for standard plate positions. Refer to job's General Notes page for additional information.
Alpine, a division of ITW Building Components Group Inc. shall not be responsible for any deviation from this drawing, any failure to build the truss in conformance with ANSI/TPI 1, or for handling, shipping, installation and bracing of trusses. A seal on this drawing or cover page listing this drawing, indicates acceptance of professional engineering responsibility solely for the design shown. The suitability and use of this drawing for any structure is the responsibility of the Building Designer per ANSI/TPI 1 Sec.2.
For more information see these web sites: Alpine: alpineitw.com; TPI: tpinst.org; SBCA: sbcacomponents.com; ICC: iccsafe.org; AWC: awc.org

SEQN: 139531 / T97 / VAL FROM:	Ply: 1 Qty: 1 Wgt: 51.8 lbs	**Job Number:** 24070306 7725 RES. **Truss Label:** VMH14	DRW: ... / ... 07/24/2024

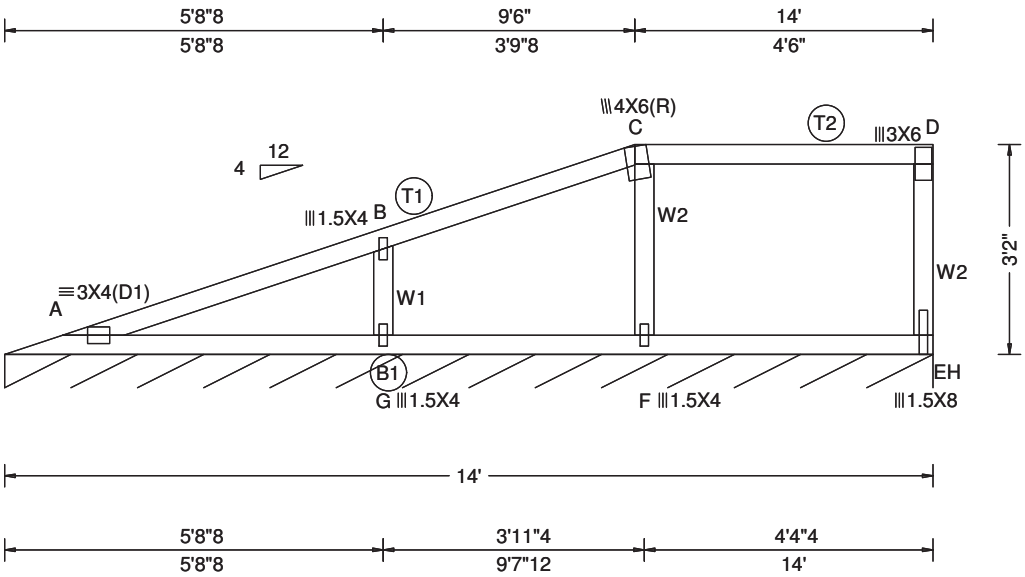

Loading Criteria (psf)

TCLL:	30.00
TCDL:	15.00
BCLL:	0.00
BCDL:	10.00
Des Ld:	55.00
NCBCLL:	10.00
Soffit:	2.00

Load Duration: 1.25
Spacing: 24.0 "

Wind Criteria
Wind Std: ASCE 7-22
Speed: 175 mph
Enclosure: Closed
Risk Category: II
EXP: C Kzt: NA
Mean Height: 16.40 ft
TCDL: 6.0 psf
BCDL: 6.0 psf
MWFRS Parallel Dist: h to 2h
C&C Dist a: 3.00 ft
Loc. from endwall: not in 9.00 ft
GCpi: 0.18
Wind Duration: 1.60

Snow Criteria (Pg,Pf in PSF)
Pg: NA Ct: NA CAT: NA
Pf: NA Ce: NA
Lu: NA Cs: NA
Snow Duration: NA

Building Code:
FBC 8th Ed. 2023 Res. HVHZ
TPI Std: 2014
Rep Fac: Yes
FT/RT:20(0)/10(0)
Plate Type(s):
WAVE

Defl/CSI Criteria

PP Deflection in	loc	L/defl	L/#
VERT(LL): 0.045	A	999	360
VERT(CL): 0.082	A	999	240
HORZ(LL): -0.008	A	-	-
HORZ(TL): 0.014	A	-	-

Creep Factor: 2.0
Max TC CSI: 0.703
Max BC CSI: 0.314
Max Web CSI: 0.176
Mfg Specified Camber:

VIEW Ver: 23.02.01A.1204.18

▲ Maximum Reactions (lbs), or *=PLF

	Gravity			Non-Gravity		
Loc	R+	/ R-	/ Rh	/ Rw	/ U	/ RL
H*	110	/-	/-	/54	/89	/19

Wind reactions based on C&C
H Brg Wid = 168 Min Req = -
Bearing A is a rigid surface.

Maximum Top Chord Forces Per Ply (lbs)

Chords	Tens.	Comp.	Chords	Tens.	Comp.
A - B	91	- 155	C - D	20	- 12
B - C	46	- 102			

Maximum Bot Chord Forces Per Ply (lbs)

Chords	Tens.	Comp.	Chords	Tens.	Comp.
A - G	208	- 80	F - E	245	- 73
G - F	221	- 85			

Maximum Web Forces Per Ply (lbs)

Webs	Tens.	Comp.	Webs	Tens.	Comp.
B - G	451	- 483	D - E	378	- 209
C - F	466	- 303			

Lumber
Top chord: 2x4 SP #2;
Bot chord: 2x4 SP #2;
Webs: 2x4 SP #2;

Wind
Member design based on both MWFRS and C&C.
Right end vertical not exposed to wind pressure.
Wind loading based on both gable and hip roof types.

Additional Notes
See DWG VAL180220723 for valley details.

****WARNING**** READ AND FOLLOW ALL NOTES ON THIS DRAWING!
****IMPORTANT**** FURNISH THIS DRAWING TO ALL CONTRACTORS INCLUDING THE INSTALLERS
Trusses require extreme care in fabricating, handling, shipping, installing and bracing. Refer to and follow the latest edition of BCSI (Building Component Safety Information, by TPI and SBCA) for safety practices prior to performing these functions. Installers shall provide temporary bracing per BCSI. Unless noted otherwise, top chord shall have properly attached structural sheathing and bottom chord shall have a properly attached rigid ceiling. Locations shown for permanent lateral restraint of webs shall have continuous lateral restraint (CLR), installed with diagonal bracing installed on the CLR per BCSI sections B3, B7, or B10, as applicable. Apply plates to each face of truss and position as shown above and on the Joint Details, unless noted otherwise. Refer to drawings 160A-Z for standard plate positions. Refer to job's General Notes page for additional information.
Alpine, a division of ITW Building Components Group Inc. shall not be responsible for any deviation from this drawing, any failure to build the truss in conformance with ANSI/TPI 1, or for handling, shipping, installation and bracing of trusses. A seal on this drawing or cover page listing this drawing, indicates acceptance of professional engineering responsibility solely for the design shown. The suitability and use of this drawing for any structure is the responsibility of the Building Designer per ANSI/TPI 1 Sec.2.
For more information see these web sites: Alpine: alpineitw.com; TPI: tpinst.org; SBCA: sbcacomponents.com; ICC: iccsafe.org; AWC: awc.org

SEQN: 204037 / T96 / VAL FROM:	Ply: 1 Qty: 1 Wgt: 42.0 lbs	**Job Number:** 24070306 7725 RES. **Truss Label:** VMH12	DRW: ... / ... 07/24/2024

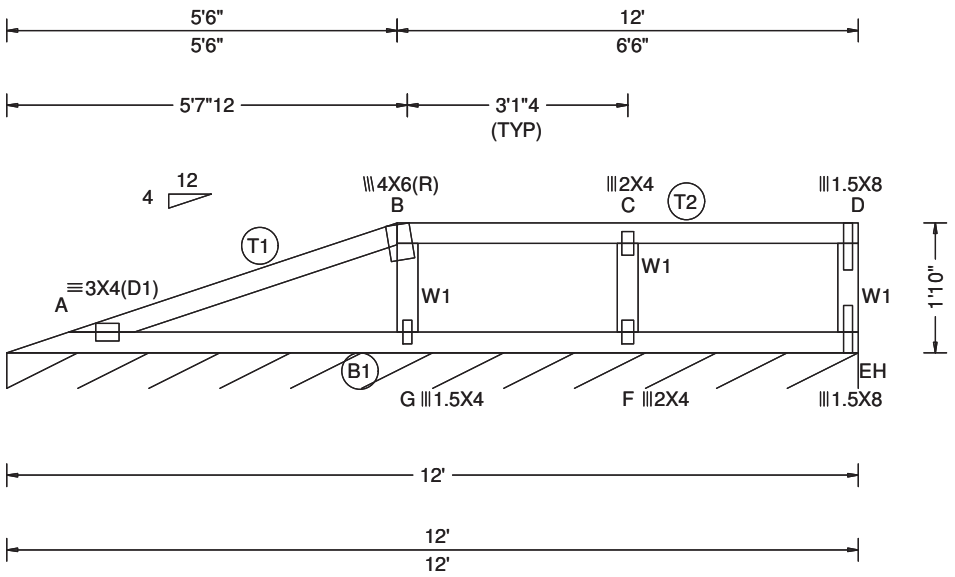

Loading Criteria (psf)

TCLL:	30.00
TCDL:	15.00
BCLL:	0.00
BCDL:	10.00
Des Ld:	55.00
NCBCLL:	10.00
Soffit:	2.00

Load Duration: 1.25
Spacing: 24.0 "

Wind Criteria
Wind Std: ASCE 7-22
Speed: 175 mph
Enclosure: Closed
Risk Category: II
EXP: C Kzt: NA
Mean Height: 16.40 ft
TCDL: 6.0 psf
BCDL: 6.0 psf
MWFRS Parallel Dist: h to 2h
C&C Dist a: 3.00 ft
Loc. from endwall: not in 9.00 ft
GCpi: 0.18
Wind Duration: 1.60

Snow Criteria (Pg,Pf in PSF)
Pg: NA Ct: NA CAT: NA
Pf: NA Ce: NA
Lu: NA Cs: NA
Snow Duration: NA

Building Code:
FBC 8th Ed. 2023 Res. HVHZ
TPI Std: 2014
Rep Fac: Yes
FT/RT:20(0)/10(0)
Plate Type(s):
WAVE

Defl/CSI Criteria

PP Deflection in	loc	L/defl	L/#
VERT(LL): 0.056	A	999	360
VERT(CL): 0.104	A	999	240
HORZ(LL): -0.012	A	-	-
HORZ(TL): 0.018	A	-	-

Creep Factor: 2.0
Max TC CSI: 0.489
Max BC CSI: 0.415
Max Web CSI: 0.121
Mfg Specified Camber:

VIEW Ver: 23.02.01A.1204.18

▲ Maximum Reactions (lbs), or *=PLF

	Gravity			Non-Gravity		
Loc	R+	/ R-	/ Rh	/ Rw	/ U	/ RL
H*	110	/-	/-	/52	/123	/16

Wind reactions based on C&C
H Brg Wid = 144 Min Req = -
Bearing A is a rigid surface.

Maximum Top Chord Forces Per Ply (lbs)

Chords	Tens.	Comp.	Chords	Tens.	Comp.
A - B	49	- 77	C - D	9	- 1
B - C	9	- 2			

Maximum Bot Chord Forces Per Ply (lbs)

Chords	Tens.	Comp.	Chords	Tens.	Comp.
A - G	138	- 48	F - E	182	- 38
G - F	182	- 38			

Maximum Web Forces Per Ply (lbs)

Webs	Tens.	Comp.	Webs	Tens.	Comp.
B - G	464	- 295	D - E	218	- 112
C - F	689	- 361			

Lumber
Top chord: 2x4 SP #2;
Bot chord: 2x4 SP #2;
Webs: 2x4 SP #2;

Wind
Member design based on both MWFRS and C&C.
Right end vertical not exposed to wind pressure.
Wind loading based on both gable and hip roof types.

Additional Notes
See DWG VAL180220723 for valley details.

****WARNING**** READ AND FOLLOW ALL NOTES ON THIS DRAWING!
****IMPORTANT**** FURNISH THIS DRAWING TO ALL CONTRACTORS INCLUDING THE INSTALLERS
Trusses require extreme care in fabricating, handling, shipping, installing and bracing. Refer to and follow the latest edition of BCSI (Building Component Safety Information, by TPI and SBCA) for safety practices prior to performing these functions. Installers shall provide temporary bracing per BCSI. Unless noted otherwise, top chord shall have properly attached structural sheathing and bottom chord shall have a properly attached rigid ceiling. Locations shown for permanent lateral restraint of webs shall have continuous lateral restraint (CLR), installed with diagonal bracing installed on the CLR per BCSI sections B3, B7, or B10, as applicable. Apply plates to each face of truss and position as shown above and on the Joint Details, unless noted otherwise. Refer to drawings 160A-Z for standard plate positions. Refer to job's General Notes page for additional information.
Alpine, a division of ITW Building Components Group Inc. shall not be responsible for any deviation from this drawing, any failure to build the truss in conformance with ANSI/TPI 1, or for handling, shipping, installation and bracing of trusses. A seal on this drawing or cover page listing this drawing, indicates acceptance of professional engineering responsibility solely for the design shown. The suitability and use of this drawing for any structure is the responsibility of the Building Designer per ANSI/TPI 1 Sec.2.
For more information see these web sites: Alpine: alpineitw.com; TPI: tpinst.org; SBCA: sbcacomponents.com; ICC: iccsafe.org; AWC: awc.org

SEQN: 204040 / T68 / VAL FROM:	Ply: 1 Qty: 1 Wgt: 40.6 lbs	**Job Number:** 24070306 7725 RES. **Truss Label:** VMH11	DRW: ... / ... 07/24/2024

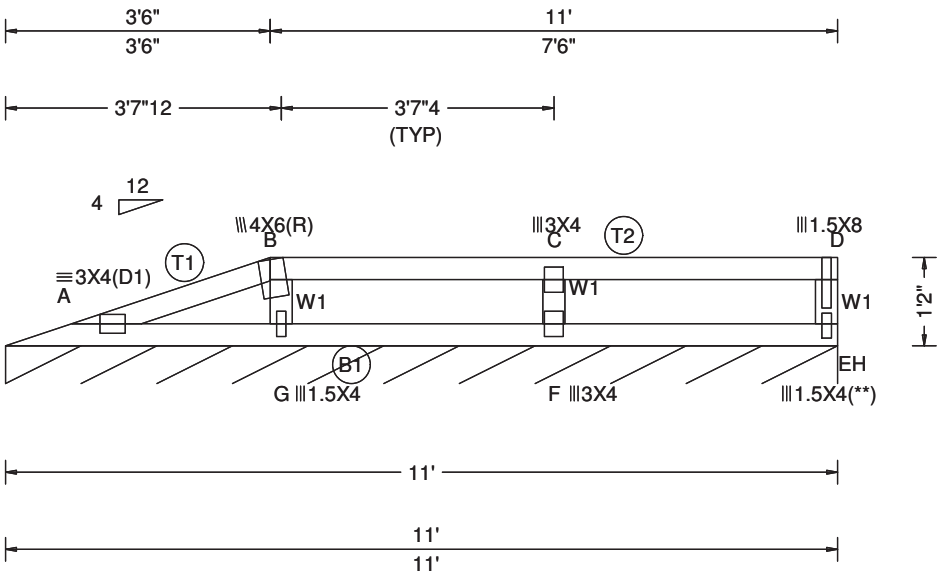

Loading Criteria (psf)

TCLL:	30.00
TCDL:	15.00
BCLL:	0.00
BCDL:	10.00
Des Ld:	55.00
NCBCLL:	10.00
Soffit:	2.00

Load Duration: 1.25
Spacing: 24.0 "

Wind Criteria
Wind Std: ASCE 7-22
Speed: 175 mph
Enclosure: Closed
Risk Category: II
EXP: C Kzt: NA
Mean Height: 16.40 ft
TCDL: 6.0 psf
BCDL: 6.0 psf
MWFRS Parallel Dist: h to 2h
C&C Dist a: 3.00 ft
Loc. from endwall: not in 9.00 ft
GCpi: 0.18
Wind Duration: 1.60

Snow Criteria (Pg,Pf in PSF)
Pg: NA Ct: NA CAT: NA
Pf: NA Ce: NA
Lu: NA Cs: NA
Snow Duration: NA

Building Code:
FBC 8th Ed. 2023 Res. HVHZ
TPI Std: 2014
Rep Fac: Yes
FT/RT:20(0)/10(0)
Plate Type(s):
WAVE

Defl/CSI Criteria

PP Deflection in	loc	L/defl	L/#
VERT(LL): -0.013	A	999	360
VERT(CL): 0.022	A	999	240
HORZ(LL): -0.003	A	-	-
HORZ(TL): 0.004	D	-	-

Creep Factor: 2.0
Max TC CSI: 0.448
Max BC CSI: 0.166
Max Web CSI: 0.145
Mfg Specified Camber:

VIEW Ver: 23.02.01A.1204.18

▲ Maximum Reactions (lbs), or *=PLF

	Gravity			Non-Gravity		
Loc	R+	/ R-	/ Rh	/ Rw	/ U	/ RL
H*	110	/-	/-	/51	/139	/11

Wind reactions based on C&C
H Brg Wid = 132 Min Req = -
Bearing A is a rigid surface.

Maximum Top Chord Forces Per Ply (lbs)

Chords	Tens.	Comp.	Chords	Tens.	Comp.
A - B	63	- 66	C - D	22	- 12
B - C	22	- 12			

Maximum Bot Chord Forces Per Ply (lbs)

Chords	Tens.	Comp.	Chords	Tens.	Comp.
A - G	49	- 62	F - E	98	- 35
G - F	98	- 35			

Maximum Web Forces Per Ply (lbs)

Webs	Tens.	Comp.	Webs	Tens.	Comp.
B - G	389	- 228	D - E	259	- 131
C - F	820	- 416			

Lumber
Top chord: 2x4 SP #2;
Bot chord: 2x4 SP #2;
Webs: 2x4 SP #2;

Plating Notes
(**) 1 plate(s) require special positioning. Refer to scaled plate plot details for special positioning requirements.

Wind
Member design based on both MWFRS and C&C.
Right end vertical not exposed to wind pressure.
Wind loading based on both gable and hip roof types.

Additional Notes
See DWG VAL180220723 for valley details.

****WARNING**** READ AND FOLLOW ALL NOTES ON THIS DRAWING!
****IMPORTANT**** FURNISH THIS DRAWING TO ALL CONTRACTORS INCLUDING THE INSTALLERS
Trusses require extreme care in fabricating, handling, shipping, installing and bracing. Refer to and follow the latest edition of BCSI (Building Component Safety Information, by TPI and SBCA) for safety practices prior to performing these functions. Installers shall provide temporary bracing per BCSI. Unless noted otherwise, top chord shall have properly attached structural sheathing and bottom chord shall have a properly attached rigid ceiling. Locations shown for permanent lateral restraint of webs shall have continuous lateral restraint (CLR), installed with diagonal bracing installed on the CLR per BCSI sections B3, B7, or B10, as applicable. Apply plates to each face of truss and position as shown above and on the Joint Details, unless noted otherwise. Refer to drawings 160A-Z for standard plate positions. Refer to job's General Notes page for additional information.
Alpine, a division of ITW Building Components Group Inc. shall not be responsible for any deviation from this drawing, any failure to build the truss in conformance with ANSI/TPI 1, or for handling, shipping, installation and bracing of trusses. A seal on this drawing or cover page listing this drawing, indicates acceptance of professional engineering responsibility solely for the design shown. The suitability and use of this drawing for any structure is the responsibility of the Building Designer per ANSI/TPI 1 Sec.2.
For more information see these web sites: Alpine: alpineitw.com; TPI: tpinst.org; SBCA: sbcacomponents.com; ICC: iccsafe.org; AWC: awc.org

SEQN: 204043 / T40 / VAL FROM:	Ply: 1 Qty: 1 Wgt: 14.0 lbs	**Job Number:** 24070306 7725 RES. **Truss Label:** VMH4	DRW: ... / ... 07/24/2024

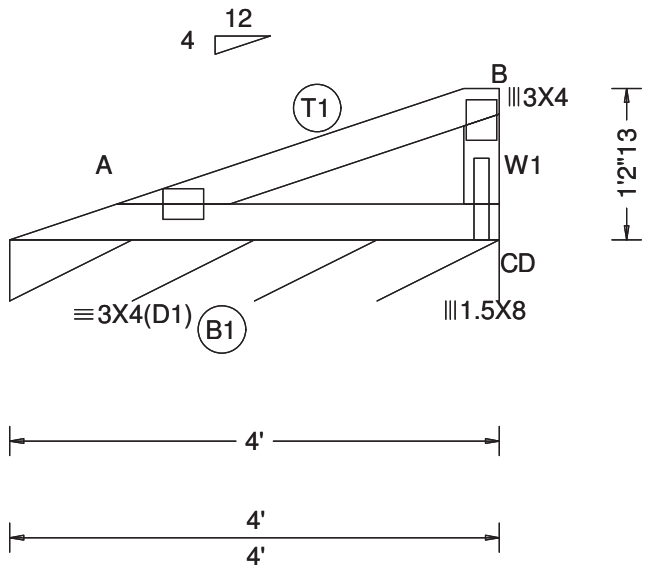

Loading Criteria (psf)

TCLL:	30.00
TCDL:	15.00
BCLL:	0.00
BCDL:	10.00
Des Ld:	55.00
NCBCLL:	10.00
Soffit:	2.00

Load Duration: 1.25
Spacing: 24.0 "

Wind Criteria
Wind Std: ASCE 7-22
Speed: 175 mph
Enclosure: Part. Enc.
Risk Category: II
EXP: C Kzt: NA
Mean Height: 15.00 ft
TCDL: 6.0 psf
BCDL: 6.0 psf
MWFRS Parallel Dist: h to 2h
C&C Dist a: 3.00 ft
Loc. from endwall: not in 9.00 ft
GCpi: 0.55
Wind Duration: 1.60

Snow Criteria (Pg,Pf in PSF)
Pg: NA Ct: NA CAT: NA
Pf: NA Ce: NA
Lu: NA Cs: NA
Snow Duration: NA

Building Code:
FBC 8th Ed. 2023 Res. HVHZ
TPI Std: 2014
Rep Fac: Yes
FT/RT:20(0)/10(0)
Plate Type(s):
WAVE

Defl/CSI Criteria

PP Deflection in	loc	L/defl	L/#
VERT(LL):	NA		
VERT(CL):	NA		
HORZ(LL):	-0.007 A	-	-
HORZ(TL):	0.008 A	-	-

Creep Factor: 2.0
Max TC CSI: 0.336
Max BC CSI: 0.330
Max Web CSI: 0.084
Mfg Specified Camber:

VIEW Ver: 23.02.01A.1204.18

▲ Maximum Reactions (lbs), or *=PLF

	Gravity			Non-Gravity		
Loc	R+	/ R-	/ Rh	/ Rw	/ U	/ RL
D*	110	/-	/-	/68	/129	/50

Wind reactions based on C&C
D Brg Wid = 48.0 Min Req = -
Bearing A is a rigid surface.

Maximum Top Chord Forces Per Ply (lbs)

Chords	Tens.	Comp.
A - B	23	-51

Maximum Bot Chord Forces Per Ply (lbs)

Chords	Tens.	Comp.
A - C	163	-22

Maximum Web Forces Per Ply (lbs)

Webs	Tens.	Comp.
B - C	248	-135

Lumber
Top chord: 2x4 SP #2;
Bot chord: 2x4 SP #2;
Webs: 2x4 SP #2;

Wind
Member design based on both MWFRS and C&C.
Right end vertical not exposed to wind pressure.
Wind loading based on both gable and hip roof types.

Additional Notes
See DWG VAL180220723 for valley details.

****WARNING**** READ AND FOLLOW ALL NOTES ON THIS DRAWING!
****IMPORTANT**** FURNISH THIS DRAWING TO ALL CONTRACTORS INCLUDING THE INSTALLERS
Trusses require extreme care in fabricating, handling, shipping, installing and bracing. Refer to and follow the latest edition of BCSI (Building Component Safety Information, by TPI and SBCA) for safety practices prior to performing these functions. Installers shall provide temporary bracing per BCSI. Unless noted otherwise, top chord shall have properly attached structural sheathing and bottom chord shall have a properly attached rigid ceiling. Locations shown for permanent lateral restraint of webs shall have continuous lateral restraint (CLR), installed with diagonal bracing installed on the CLR per BCSI sections B3, B7, or B10, as applicable. Apply plates to each face of truss and position as shown above and on the Joint Details, unless noted otherwise. Refer to drawings 160A-Z for standard plate positions. Refer to job's General Notes page for additional information.
Alpine, a division of ITW Building Components Group Inc. shall not be responsible for any deviation from this drawing, any failure to build the truss in conformance with ANSI/TPI 1, or for handling, shipping, installation and bracing of trusses. A seal on this drawing or cover page listing this drawing, indicates acceptance of professional engineering responsibility solely for the design shown. The suitability and use of this drawing for any structure is the responsibility of the Building Designer per ANSI/TPI 1 Sec.2.
For more information see these web sites: Alpine: alpineitw.com; TPI: tpinst.org; SBCA: sbcacomponents.com; ICC: iccsafe.org; AWC: awc.org

SEQN: 204046 / T122 / VAL FROM:	Ply: 1 Qty: 2 Wgt: 14.0 lbs	**Job Number:** 24070306 7725 RES. **Truss Label:** VM4	DRW: ... / ... 07/24/2024

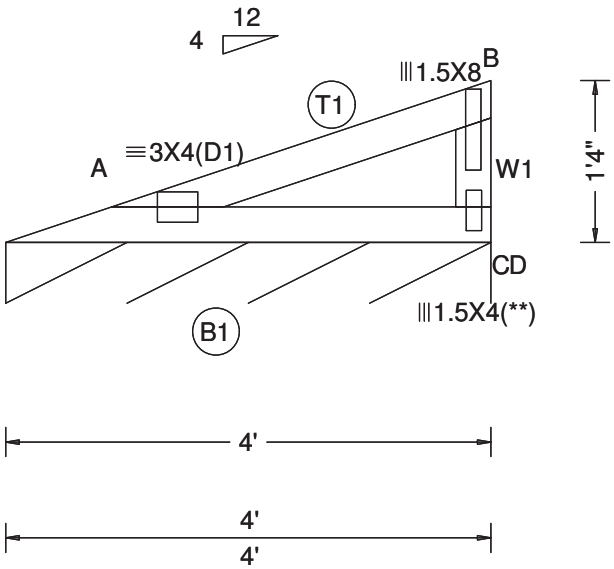

Loading Criteria (psf)	**Wind Criteria**	**Snow Criteria** (Pg,Pf in PSF)	**Defl/CSI Criteria**
TCLL: 30.00 TCDL: 15.00 BCLL: 0.00 BCDL: 10.00 Des Ld: 55.00 NCBCLL: 10.00 Soffit: 2.00 Load Duration: 1.25 Spacing: 24.0 "	Wind Std: ASCE 7-22 Speed: 175 mph Enclosure: Closed Risk Category: II EXP: C Kzt: NA Mean Height: 22.19 ft TCDL: 6.0 psf BCDL: 6.0 psf MWFRS Parallel Dist: > 2h C&C Dist a: 3.00 ft Loc. from endwall: not in 9.00 ft GCpi: 0.18 Wind Duration: 1.60	Pg: NA Ct: NA CAT: NA Pf: NA Ce: NA Lu: NA Cs: NA Snow Duration: NA Building Code: FBC 8th Ed. 2023 Res. HVHZ TPI Std: 2014 Rep Fac: Yes FT/RT:20(0)/10(0) Plate Type(s): WAVE	PP Deflection in loc L/defl L/# VERT(LL): NA VERT(CL): NA HORZ(LL): -0.007 A - - HORZ(TL): 0.008 A - - Creep Factor: 2.0 Max TC CSI: 0.323 Max BC CSI: 0.320 Max Web CSI: 0.090 Mfg Specified Camber: VIEW Ver: 23.02.01A.1204.18

▲ Maximum Reactions (lbs), or *=PLF

	Gravity			Non-Gravity		
Loc	R+	/ R-	/ Rh	/ Rw	/ U	/ RL
D*	110	/-	/-	/60	/134	/52

Wind reactions based on C&C
D Brg Wid = 48.0 Min Req = -
Bearing A is a rigid surface.

Maximum Top Chord Forces Per Ply (lbs)

Chords	Tens.	Comp.
A - B	23	-65

Maximum Bot Chord Forces Per Ply (lbs)

Chords	Tens.	Comp.
A - C	172	-11

Maximum Web Forces Per Ply (lbs)

Webs	Tens.	Comp.
B - C	286	-135

Lumber

Top chord: 2x4 SP #2;
Bot chord: 2x4 SP #2;
Webs: 2x4 SP #2;

Plating Notes

(**) 1 plate(s) require special positioning. Refer to scaled plate plot details for special positioning requirements.

Wind

Member design based on both MWFRS and C&C.

Right end vertical not exposed to wind pressure.

Wind loading based on both gable and hip roof types.

Additional Notes

See DWG VAL180220723 for valley details.

****WARNING**** READ AND FOLLOW ALL NOTES ON THIS DRAWING!
****IMPORTANT**** FURNISH THIS DRAWING TO ALL CONTRACTORS INCLUDING THE INSTALLERS
Trusses require extreme care in fabricating, handling, shipping, installing and bracing. Refer to and follow the latest edition of BCSI (Building Component Safety Information, by TPI and SBCA) for safety practices prior to performing these functions. Installers shall provide temporary bracing per BCSI. Unless noted otherwise, top chord shall have properly attached structural sheathing and bottom chord shall have a properly attached rigid ceiling. Locations shown for permanent lateral restraint of webs shall have continuous lateral restraint (CLR), installed with diagonal bracing installed on the CLR per BCSI sections B3, B7, or B10, as applicable. Apply plates to each face of truss and position as shown above and on the Joint Details, unless noted otherwise. Refer to drawings 160A-Z for standard plate positions. Refer to job's General Notes page for additional information.
Alpine, a division of ITW Building Components Group Inc. shall not be responsible for any deviation from this drawing, any failure to build the truss in conformance with ANSI/TPI 1, or for handling, shipping, installation and bracing of trusses. A seal on this drawing or cover page listing this drawing, indicates acceptance of professional engineering responsibility solely for the design shown. The suitability and use of this drawing for any structure is the responsibility of the Building Designer per ANSI/TPI 1 Sec.2.
For more information see these web sites: Alpine: alpineitw.com; TPI: tpinst.org; SBCA: sbcacomponents.com; ICC: iccsafe.org; AWC: awc.org

SEQN: 204049 / T111 / VAL FROM:	Ply: 1 Qty: 8 Wgt: 5.6 lbs	**Job Number:** 24070306 7725 RES. **Truss Label:** VM2	DRW: ... / ... 07/24/2024

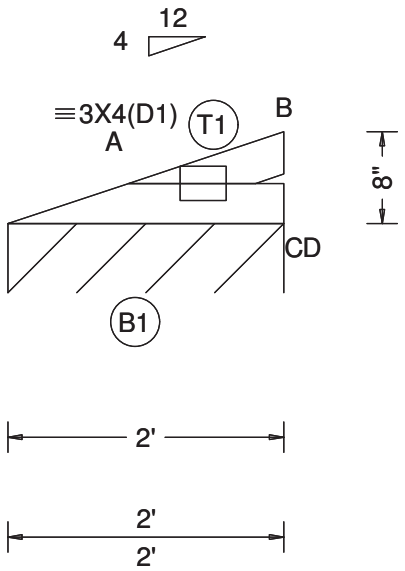

Loading Criteria (psf)

TCLL:	30.00
TCDL:	15.00
BCLL:	0.00
BCDL:	10.00
Des Ld:	55.00
NCBCLL:	10.00
Soffit:	2.00

Load Duration: 1.25
Spacing: 24.0 "

Wind Criteria
Wind Std: ASCE 7-22
Speed: 175 mph
Enclosure: Closed
Risk Category: II
EXP: C Kzt: NA
Mean Height: 15.00 ft
TCDL: 6.0 psf
BCDL: 6.0 psf
MWFRS Parallel Dist: 0 to h/2
C&C Dist a: 3.00 ft
Loc. from endwall: not in 4.50 ft
GCpi: 0.18
Wind Duration: 1.60

Snow Criteria (Pg,Pf in PSF)
Pg: NA Ct: NA CAT: NA
Pf: NA Ce: NA
Lu: NA Cs: NA
Snow Duration: NA

Building Code:
FBC 8th Ed. 2023 Res. HVHZ
TPI Std: 2014
Rep Fac: Yes
FT/RT:20(0)/10(0)
Plate Type(s):
WAVE

Defl/CSI Criteria

PP Deflection in	loc	L/defl	L/#
VERT(LL): -0.001	C	999	360
VERT(CL): 0.002	C	999	240
HORZ(LL): -0.000	C	-	-
HORZ(TL): 0.000	C	-	-

Creep Factor: 2.0
Max TC CSI: 0.038
Max BC CSI: 0.064
Max Web CSI: 0.000
Mfg Specified Camber:

VIEW Ver: 23.02.01A.1204.18

▲ Maximum Reactions (lbs), or *=PLF

	Gravity			Non-Gravity		
Loc	R+	/ R-	/ Rh	/ Rw	/ U	/ RL
D*	110	/-	/-	/47	/75	/32

Wind reactions based on C&C
D Brg Wid = 24.0 Min Req = -
Bearing A is a rigid surface.

Maximum Top Chord Forces Per Ply (lbs)

Chords	Tens.	Comp.
A - B	0	- 7

Maximum Bot Chord Forces Per Ply (lbs)

Chords	Tens.	Comp.
A - C	63	- 6

Lumber
Top chord: 2x4 SP #2;
Bot chord: 2x4 SP #2;

Wind
Member design based on both MWFRS and C&C.
Wind loading based on both gable and hip roof types.

Additional Notes
See DWG VAL180220723 for valley details.

****WARNING**** READ AND FOLLOW ALL NOTES ON THIS DRAWING!
****IMPORTANT**** FURNISH THIS DRAWING TO ALL CONTRACTORS INCLUDING THE INSTALLERS
Trusses require extreme care in fabricating, handling, shipping, installing and bracing. Refer to and follow the latest edition of BCSI (Building Component Safety Information, by TPI and SBCA) for safety practices prior to performing these functions. Installers shall provide temporary bracing per BCSI. Unless noted otherwise, top chord shall have properly attached structural sheathing and bottom chord shall have a properly attached rigid ceiling. Locations shown for permanent lateral restraint of webs shall have continuous lateral restraint (CLR), installed with diagonal bracing installed on the CLR per BCSI sections B3, B7, or B10, as applicable. Apply plates to each face of truss and position as shown above and on the Joint Details, unless noted otherwise. Refer to drawings 160A-Z for standard plate positions. Refer to job's General Notes page for additional information.
Alpine, a division of ITW Building Components Group Inc. shall not be responsible for any deviation from this drawing, any failure to build the truss in conformance with ANSI/TPI 1, or for handling, shipping, installation and bracing of trusses. A seal on this drawing or cover page listing this drawing, indicates acceptance of professional engineering responsibility solely for the design shown. The suitability and use of this drawing for any structure is the responsibility of the Building Designer per ANSI/TPI 1 Sec.2.
For more information see these web sites: Alpine: alpineitw.com; TPI: tpinst.org; SBCA: sbcacomponents.com; ICC: iccsafe.org; AWC: awc.org

ICC-ES Evaluation Report

ESR-2552

Reissued March 2024

Subject to renewal March 2025

This report also contains:

- LABC Supplement

- FBC Supplement

ICC-ES Evaluation Reports are not to be construed as representing aesthetics or any other attributes not specifically addressed, nor are they to be construed as an endorsement of the subject of the report or a recommendation for its use. There is no warranty by ICC Evaluation Service, LLC, express or implied, as to any finding or other matter in this report, or as to any product covered by the report.

Copyright © 2024 ICC Evaluation Service, LLC. All rights reserved.

DIVISION: 06 00 00—WOOD, PLASTICS AND COMPOSITES **Section: 06 05 23—Wood, Plastic, and Composite Fastenings**	**REPORT HOLDER: SIMPSON STRONG-TIE COMPANY INC.**	**EVALUATION SUBJECT: SIMPSON STRONG-TIE® FACE-MOUNT HANGERS FOR SAWN LUMBER, STRUCTURAL COMPOSITE LUMBER (SCL), PREFABRICATED WOOD I-JOISTS AND GLULAM BEAMS (ENGINEERED WOOD PRODUCTS)**	

1.0 EVALUATION SCOPE

Compliance with the following codes:

- 2021, 2018, 2015, and 2012 *International Building Code®* (IBC)
- 2021, 2018, 2015, and 2012 *International Residential Code®* (IRC)

For evaluation for compliance with codes adopted by the *Los Angeles Department of Building and Safety* (LADBS), see ESR-2552 LABC and LARC Supplement.

Property evaluated:

- Structural

2.0 USES

The Simpson Strong-Tie® face-mount hangers described in this report are used as wood framing connectors in wood construction in accordance with Section 2304.10.4 of the 2021 IBC, 2304.10.3 of the 2018 and 2015 IBC and Section 2304.9.3 of the 2012 IBC. The face-mount hangers may also be used in structures regulated under the IRC when an engineered design is submitted in accordance with Section R301.1.3 of the IRC.

3.0 DESCRIPTION

3.1 General:

With the exception of the CBH, ACBH, SCBH and HSKP Hangers Series, the Simpson Strong-Tie face-mount hangers described in this report are U-shaped hangers that have prepunched holes for the installation of nails or Simpson Strong-Drive SDS screws, depending on the hanger model, into the face of the supporting wood header or beam or ledger. The CBH Hanger is used in pairs and is a die-formed steel plate with a welded stud and prepunched holes for the installation of Simpson Strong-Drive SDS screws. The ACBH hanger is used in pairs and is manufactured in one piece from aluminum with predrilled holes for the installation of Simpson Strong-Drive SDCF screws. The SCBH hanger is used in pairs and is manufactured in one piece from steel with predrilled holes for the installation of Simpson Strong-Drive SDCF screws. The HSKP hanger has a horizontal bearing plate to support the joist/beam and includes prepunched holes in its back plate for the installation of Simpson Strong-Drive SDCF screws into the face of the supporting wood Column.

3.1.1 LU Series Hangers: The LU series hangers are formed from No. 20 gage galvanized steel. See Table 1 for hanger dimensions, required fasteners, and allowable loads; and Figure 1 for a drawing of a typical LU series hanger.

3.1.2 LUCZ Series Hangers: The LUCZ hangers have concealed flanges to allow for installation near the end of a supporting member such as a ledger or header. The hangers are formed from No. 18 gage galvanized steel coated with a G185 zinc coating. See Table 2 and Figure 2 for hanger dimensions, required fastener schedule, allowable loads and a typical installation detail.

3.1.3 U Hangers: The U series hangers are formed from No. 16 gage galvanized steel. The hangers are face-nailed to the supporting wood header, and nailed to the supported solid sawn lumber, structural composite lumber or prefabricated wood I-joists with web stiffeners to accept the required size and number of joist nails shown in Table 3. See Table 3 for the U series hanger model numbers, hanger dimensions, required fasteners, and allowable loads. See Figure 3 for a drawing of a typical U series joist hanger.

3.1.4 HU and HUC Series Hangers: The HU and HUC series hangers are formed from No. 14 gage galvanized steel, and are face-nailed to the supporting wood header/beam and nailed to the solid sawn lumber, supported structural composite lumber or prefabricated wood I-joists with web stiffeners. HU hangers having a seat width (W) equal to or greater than $2^{9}/_{16}$ inches (65 mm) are available with concealed flanges and are specified with the model designation HUC. See Table 4 for hanger model numbers, hanger dimensions, required fasteners and allowable loads based on the nailing. The HU and HUC hangers have triangular and round holes in both the U-shaped portion supporting the wood joist and in the flanges attached to the supporting wood header/beam. The allowable loads are achieved by filling all holes (both the round and triangular) with size of nails shown in Table 4. See Figures 4A and 4B for drawings of typical HU and HUC hangers, and Figure 4C shows a typical installation of an HU hanger supporting a prefabricated wood I-joist with approved web stiffeners.

3.1.5 HUCQ Series Hangers: The HUCQ series hangers are formed from No. 14 gage galvanized steel and are used to support glulam beams or other approved wood members. Other approved wood members must be laterally supported at the ends in accordance with Section 2308.4.6 of the IBC and Section R502.7 of the IRC. The hangers have prepunched holes for the installation of Simpson Strong-Drive SDS series wood screws (SDS). See Table 5 for the HUCQ series model numbers, hanger dimensions, required fasteners and allowable loads. See Figure 5 for a drawing of the HUCQ series hanger.

3.1.6 LUS Series Hangers: The LUS series hangers are formed from No. 18 gage galvanized steel. The hangers have prepunched holes for the installation of nails that are driven at a 45-degree angle through the joist and into the header, which is described as double shear nailing in the installation instructions. See Table 6 for the hanger dimensions, required fasteners, and allowable loads; and Figure 6 for a drawing of a typical LUS series hanger.

3.1.7 MUS Joist Hanger: The MUS series hangers are formed from No. 18 gage galvanized steel. The U-shaped portion of the hangers has prepunched holes for the installation of joist nails that are driven at an angle through the joist and into the header, which is described as double shear nailing in the installation instructions. See Table 7 for the hanger dimensions, required fasteners, and allowable loads; Figure 7 for a drawing of a typical MUS series hanger.

3.1.8 HUS Series Hangers: The HUS hangers having a seat width, *W*, of $3^{9}/_{16}$ inches (90 mm) are formed from No. 14 gage galvanized steel. The HUS1.81/10 hanger with a seat width, *W*, of $1^{13}/_{16}$ inches (46 mm) is formed from No. 16 gage galvanized steel. The hangers have prepunched holes for the installation of nails that are driven at a 45-degree angle through the joist and into the header, which is described as double shear nailing in the installation instructions. See Table 8 for HUS series hanger models, hanger dimensions, required fasteners, and allowable loads. See Figure 8 for a drawing of a typical HUS hanger.

3.1.9 HHUS Series Hangers: The HHUS series hangers are formed from No. 14 gage galvanized steel. The hangers have pre-punched holes for the installation of nails that are driven at a 45 degree angle through the joist and into the header, which is described as double shear nailing in the installation instructions. See Table 9 for the hanger model numbers, hanger dimensions, required fasteners, and allowable loads. See Figure 9 for a drawing of a typical HHUS hanger.

3.1.10 HGUS Series Hangers: The HGUS series hangers are formed from No. 12 gage galvanized steel and are used to support glulam beams or other approved wood members. Other approved wood members must be laterally supported at the ends in accordance with Section 2308.4.6 of the IBC and Section R502.7 of the

IRC. The hangers have prepunched holes for the installation of nails that are driven at a 45-degree angle through the joist and into the header, which is described as double shear nailing in the installation instructions. See Table 10 for the HGUS series hanger model numbers, hanger dimensions, required fasteners and allowable loads. See Figure 10 for a drawing of a typical HGUS hanger.

3.1.11 HTU Series Hangers: The HTU hangers are designed to support trusses installed with full or partial heel heights and gaps between the truss and the supporting girders of up to, but not exceeding, $^1/_2$ inch (12.7 mm), as shown in Tables 11A and 11C, and $^1/_8$ inch (3.2 mm) as shown in Table 11B. Minimum and maximum nailing options are given in Tables 11A, 11B, and 11C to address varying heel heights and support conditions. The HTU hangers are formed from No. 16 gage galvanized steel. See Table 11A and Figures 11A and 11B for hanger dimensions, required fastener schedule, allowable loads and an installation detail for installations in which the gap between the truss and the supporting girders is less than or equal to $^1/_2$ inch (12.7 mm). See Table 11B and Figures 11A and 11B for hanger dimensions, required fastener schedule, allowable loads and an installation detail for installations in which the gap between the truss and the supporting girders is less than or equal to $^1/_8$ inch (3.2 mm). See Table 11C and Figures 11A and 11C for hanger dimensions, required fastener schedule, allowable loads and an installation detail for installations in which the minimum allowable number of nails is driven into the supporting girder, and the gap between the truss and supporting girder is less than or equal to $^1/_2$ inch (12.7 mm).

3.1.12 LGU, MGU, HGU and HHGU Series Hangers: The LGU and MGU series hangers are formed from No. 10 gage galvanized steel; HGU series hangers are formed from No. 7 gage galvanized steel; and HHGU series hangers are formed from No. 3 gage steel. The LGU, MGU, HGU and HHGU series hangers are used to support glulam beams or other approved wood members. Other approved wood members must be laterally supported at the ends in accordance with Section 2308.4.6 of the IBC and Section R502.7 of the IRC. The hangers have pre-punched holes for the installation of Simpson Strong-Drive SDS series wood screws (SDS). See Table 12 for the LGU, MGU, HGU and HHGU series model numbers, hanger dimensions, required fasteners and allowable loads. See Figure 12 for a drawing of the HHGU series hanger and a typical installation detail.

3.1.13 SUR/L Series Hangers: The SUR/L series hangers are formed from No. 16 gage galvanized steel. The SUR and SUL hangers are identical except they are skewed at 45 degrees to the right (SUR) and the left (SUL), respectively. See Table 13 for hanger models, hanger dimensions, required fasteners, and allowable loads. See Figure 13A for a drawing of a typical SUL hanger and Figure 13B for a typical SUR hanger installation.

3.1.14 HSUR/L Series Hangers: The HSUR/L series hangers are formed from No. 14 gage galvanized steel. The HSUR and HSUL hangers are identical except they are skewed at 45 degrees to the right (HSUR) and the left (HSUL), respectively, and are designed to support prefabricated wood I-joists having approved web stiffeners, and structural composite lumber (SCL). See Table 14 for the hanger model numbers, hanger dimensions, required fasteners, and allowable loads. See Figure 14A for a drawing of a typical HSUR hanger, and Figure 14B for a typical HSUR hanger installation.

3.1.15 IUS Series Hangers: The IUS series hangers are formed from No. 18 gage galvanized steel and are used exclusively to support prefabricated wood I-joists to a supporting wood member. See Table 15A for the IUS series hanger model numbers, hanger dimensions, and required fasteners; and Table 15B for allowable loads. See Figures 15A, 15B, and 15C for drawings of a typical IUS hanger and a typical IUS hanger installation.

3.1.16 MIU Series Joist Hangers: The MIU series hangers are formed from No. 16 gage galvanized steel and are used to support prefabricated wood I-joists or other approved wood members. Other approved wood members must be laterally supported at the ends in accordance with Section 2308.4.6 of the IBC and Section R502.7 of the IRC. See Table 16 for the MIU series hanger model numbers, hanger dimensions, required fasteners, and allowable loads. See Figure 16A for a drawing of a typical MIU hanger and Figure 16B for a drawing of a typical MIU hanger installation.

3.1.17 DU, DHU and DHUTF Series Hangers: The DU, DHU and DHUTF series hangers are face-mount and top-flange hangers that are formed from either No. 14 gage or No. 12 gage galvanized steel. They are designed to transfer joist floor loads to a wood stud wall through two layers of $^5/_8$-inch-thick (15.9 mm) gypsum board complying with ASTM C1396, and are installed using a combination of nails and Simpson Strong-Drive SDS series wood screws (SDS), which are addressed in ESR-2236. These hangers are installed after the two layers of $^5/_8$" Type X gypsum board is installed and fastened using, at a minimum, the fastener schedule in

Item 14.1-5 in IBC Table 721.1(2). See Table 17A for hanger dimensions and allowable loads. See Table 17B for fastener schedule. See Figure 17 for a drawing of the DU, DHU and DHUTF hangers and a typical installation.

3.1.18 CBH Series Hangers: The CBH series hangers are face-mounted and installed in inverted pairs. They are formed from No. 3 gage steel. They are used to support glulam beams or other approved wood members and are installed using Simpson Strong-Drive SDS series wood screws (SDS), which are addressed in ESR-2236. See Table 18A & 18B for hanger dimensions, fastener schedules and allowable loads. See Figure 18 for a drawing of the CBH hangers and a typical installation.

3.1.19 ACBH and SCBH Series Hangers: The ACBH series hangers are aluminum and the SCBH series hangers are steel. The ACBH and SCBH series hangers are face-mounted and installed in inverted pairs. They are used to support glulam beams and are installed using Simpson Strong-Drive SDCF series wood screws, which are addressed in ESR-3046. See Table 19 for hanger dimensions, fastener schedules and allowable loads. See Figure 19 for drawings of the ACBH and SCBH hangers and a typical installation.

3.1.20 HSKP Series Hangers: The HSKP series hangers are factory welded with a No. 3 gage steel back plate, ½" steel bearing plate and a No. 3 gage steel (for HSKP5.75x14.5 and HSKP5.75x17.0) or 3/8" steel (for HSKP5.75x19.5) knife plate. The HSKP is installed using Simpson Strong-Drive SDCF series wood screws, which are addressed in ESR-3046. See Table 20 for model numbers, hanger dimensions, fasteners shedules, allowable loads and installation instructions. See Figure 20 for hanger drawings, typical installation and bearing area requirements for the carried members.

3.2 Materials:

3.2.1 Hanger Material: All hangers described in this report, with the exception of the CBH, ACBH, SCBH, HSKP, HTU, HGUS and HHGU series hangers, are manufactured from galvanized steel complying with ASTM A653, SS designation, Grade 33, with a minimum yield strength, F_y, of 33,000 psi (227 MPa) and a minimum tensile strength, F_u, of 45,000 psi (310 MPa).

The HTU and HGUS series hangers are manufactured from galvanized steel complying with ASTM A653, SS designation, Grade 40, with a minimum yield strength, F_y, of 40,000 psi (276 MPa) and a minimum tensile strength, F_u, of 55,000 psi (379 MPa).

The HHGU and CBH series hangers are manufactured from nongalvanized steel complying with ASTM A1011 SS, Grade 33, with a minimum yield strength, F_y, of 33,000 psi (227 MPa) and a minimum tensile strength, F_u, of 52,000 psi (358 MPa).

The stud of the CBH hangers is manufactured from nongalvanized steel complying with ASTM A108 Grade 1018 with a minimum yield strength, F_y, of 70,000 psi (483 MPa) and a minimum tensile strength, F_u, of 80,000 psi (552 MPa).

The ACBH series hangers are manufactured from ASTM B221 6061-T6 aluminum with a minimum yield strength, F_y, of 40,000 psi (276 MPa) and a minimum tensile strength, F_u, of 45,000 psi (310 MPa).

The SCBH series hangers are manufactured from nongalvanized steel complying with ASTM A572, Grade 50 with minimum yield strength, F_y, of 50,000 psi (345 MPa) and a minimum tensile strength, F_u, of 65,000 psi (448 MPa).

The HSKP series hanger is manufactured from three components: a back plate, a bearing plate and a knife plate. The HSKP back plate and knife plate are manufactured from nongalvanized steel complying with ASTM A1011 SS, Grade 33, with a minimum yield strength, F_y, of 33,000 psi (227 MPa) and a minimum tensile strength, F_u, of 52,000 psi (358 MPa). The HSKP bearing plate is manufactured from nongalvanized steel complying with ASTM A572, Grade 50, with a minimum yield strength, F_y, of 50,000 psi (345 MPa) and a minimum tensile strength, F_u, of 65,000 psi (448 MPa).

Exception: The HSKP5.75x19.5 knife plate component is manufactured from nongalvanized steel complying with ASTM A36 with a minimum yield strength, F_y, of 36,000 psi (248 MPa) and a minimum tensile strength, F_u, of 58,000 psi (400 MPa).

Base-metal thicknesses for the hangers in this report are as follows:

NOMINAL THICKNESS (gage No. or inch)	MINIMUM BASE-METAL THICKNESS (inch)
$^1/_2$"	0.4900
$^3/_8$"	0.3650
No. 3	0.2285
No. 7	0.1715
No. 10	0.1275
No. 12	0.0975
No. 14	0.0685
No. 16	0.0555
No. 18	0.0444
No. 20	0.0335

For **SI:** 1 inch = 25.4 mm.

The thickness of the installed pairs of CBH, ACBH, and SCBH series hangers are shown in the applicable figures in this report.

With the exception of the CBH and SCBH hangers, the galvanized zinc coating for the steel hangers in Section 3.1 conforms to ASTM A924 and ASTM A653 with a G90 designation. Some models of these hangers (designated with a model number ending with Z) are available with a G185 zinc coating specification in accordance with ASTM A653. Some models (designated with a model number ending with HDG) are available with a hot-dip galvanization, also known as “batch” galvanization, in accordance with ASTM A123, with a minimum specified coating weight of 2.0 ounces of zinc per square foot of surface area (600 g/m^2), total for both sides. With the exception of the LUCZ, model numbers in this report do not include the Z or HDG ending, but the information shown applies.

The CBH series hanger product is available with an electrogalvanized finish in accordance with ASTM B633 or with a hot-dip galvanized finish in accordance with ASTM A123 (designated with a model number ending with HDG). The SCBH series hanger product has an electrogalvanized finish in accordance with ASTM B633.

The lumber treater or holder of this report (Simpson Strong-Tie Company) should be contacted for recommendations on minimum corrosion resistance of steel connectors in contact with the specific proprietary preservative treated or fire retardant treated lumber.

3.2.2 Wood: Wood headers/beams and columns to which the connectors are fastened must be either sawn lumber, structural glued-laminated timber, or engineered lumber having a minimum specific gravity of 0.50 (minimum equivalent specific gravity of 0.50 for engineered lumber), and having a maximum moisture content of 19 percent (16 percent for engineered lumber) except as noted in Section 4.1. The thickness of the supporting wood member (header) must be equal to or greater than the length of the fasteners specified in the tables in this report, or as required by wood member design, whichever is greater.

Supported wood members that are prefabricated woodI-joists or SCL must be addressed in a current evaluation report, which will specify the allowable shear capacity and allowable reactions at supports for the proprietary engineered wood lumber. When required, web stiffeners for prefabricated wood I-joists must comply with specifications noted in the applicable evaluation report for the I-joists. The hangers described in this evaluation report may support I-joists having a current ICC-ES evaluation report. The evaluation report for the prefabricated wood I-joist must specify a minimum bearing length that is equal to or less than the hanger bearing length. When the hangers are used to support prefabricated wood I-joists, joist end reactions must not exceed the allowable joist end reaction per the I-joist manufacturer’s code report. For installation with engineered wood members, minimum allowable fastener spacing and end and edge distances, as specified in the applicable evaluation report for the engineered wood product, must be met.

3.2.3 Fasteners: Nails used for hangers described in this report must comply with ASTM F1667 and have the following minimum fastener dimensions and bending yield strengths (F_{yb}):

FASTENERS	SHANK DIAMETER (inches)	NAIL LENGTH (inches)	F_{yb} (psi)
10d × $1^1/_2$	0.148	$1^1/_2$	90,000
10d	0.148	3	90,000
16d × $2^1/_2$	0.162	$2^1/_2$	90,000
16d	0.162	$3^1/_2$	90,000

For **SI:** 1 inch = 25.4 mm, 1 psi = 6.895 kPa.

Unless otherwise indicated, fasteners listed in this report as 10d and 16d are 10d common and 16d common nails, respectively.

Some of the hangers and concealed beam hangers (CBH) described in this report are attached to the wood members using Simpson Strong-Drive SDS series wood screws addressed in ESR-2236. Other concealed beam hangers (ACBH and SCBH) and HSKP hangers described in this report are attached to wood members using SDCF Strong-Drive wood screws addressed in ESR-3046.

Fasteners used in contact with preservative treated or fire retardant treated lumber must comply with Section 2304.10.6 of the 2021 IBC, Section 2304.10.5 of the 2018 and 2015 IBC, Section 2304.9.5 of the 2012, and applicable sections of the IRC. The chemical treatment manufacturer or this report holder (Simpson Strong-Tie Company) should be contacted for recommendations on minimum corrosion resistance of fasteners and connection capacities of fasteners used with the specific proprietary preservative treated or fire retardant treated lumber.

4.0 DESIGN AND INSTALLATION

4.1 Design:

The tabulated allowable loads shown in this report are based on allowable stress design (ASD) and include the load duration factor, C_D, corresponding with the applicable loads in accordance with the NDS.

Tabulated allowable loads apply to products connected to wood used under dry conditions and where sustained temperatures are 100ºF (37.8ºC) or less. When products are installed to wood having a moisture content greater than 19 percent (16 percent for engineered wood products), or where wet service is expected, the allowable loads must be adjusted by the wet service factor, CM, specified in the NDS. When connectors are installed in wood that will experience sustained exposure to temperatures exceeding 100ºF (37.8ºC), the allowable loads in this report must be adjusted by the temperature factor, Ct, specified in the NDS.

Connected wood members must be analyzed for load-carrying capacity at the connection in accordance with the NDS and the applicable evaluation report for engineered wood products.

4.2 Installation:

Installation of the connectors must be in accordance with this evaluation report and the manufacturer's published installation instructions. In the event of a conflict between this report and the manufacturer's published installation instructions, this report governs.

5.0 CONDITIONS OF USE:

The Simpson Strong-Tie face-mount hangers described in this report comply with, or are suitable alternatives to what is specified in, those codes listed in Section 1.0 of this report, subject to the following conditions:

5.1 The connectors must be manufactured, identified and installed in accordance with this report and the manufacturer's published installation instructions. A copy of the instructions must be available at the jobsite at all times during installation.

5.2 Calculations showing compliance with this report must be submitted to the code official. The calculations must be prepared by a registered design professional where required by the statutes of the jurisdiction in which the project is to be constructed.

5.3 Adjustment factors noted in Section 4.1 and the applicable codes must be considered, where applicable.

5.4 Connected wood members and fasteners must comply, respectively, with Sections 3.2.2 and 3.2.3 of this report.

5.5 Use of connectors with preservative or fire retardant treated lumber must be in accordance with Section 3.2.1 of this report. Use of fasteners with preservative treated or fire retardant treated lumber must be in accordance with Section 3.2.3 of this report.

5.6 The face mount hangers are manufactured under a quality control program with inspections by ICC-ES.

6.0 EVIDENCE SUBMITTED

6.1 Data in accordance with the ICC-ES Acceptance Criteria for Joist Hangers and Similar Devices (AC13), dated October 2018 (editorially revised December 2020).

6.2 Tests and calculations in accordance with the ICC-ES Acceptance Criteria for Dowel-Type Threaded Fasteners used in Wood (AC233), dated June 2023.

7.0 IDENTIFICATION

7.1 The products described in this report are identified with a die-stamp or an adhesive label indicating the name of the manufacturer (Simpson Strong-Tie) the model number, and the number of an index evaluation report (ESR-2523) that is used as an identifier for the products addressed in this report.

7.2 The report holder's contact information is the following:

SIMPSON STRONG-TIE COMPANY INC.
5956 WEST LAS POSITAS BOULEVARD
PLEASANTON, CALIFORNIA 94588
(800) 999-5099
www.strongtie.com
jellis@strongtie.com

DIVISION: 06 00 00—WOOD, PLASTICS AND COMPOSITES
Section: 06 05 23—Wood, Plastic, and Composite Fastenings

REPORT HOLDER:

SIMPSON STRONG-TIE COMPANY INC.

EVALUATION SUBJECT:

SIMPSON STRONG-TIE® FACE-MOUNT HANGERS FOR SAWN LUMBER, STRUCTURAL COMPOSITE LUMBER (SCL), PREFABRICATED WOOD I-JOISTS AND GLULAM BEAMS (ENGINEERED WOOD PRODUCTS)

1.0 REPORT PURPOSE AND SCOPE

Purpose:

The purpose of this evaluation report supplement is to indicate that Simpson Strong-Tie® face-mount hangers for sawn lumber, structural composite lumber (SCL), prefabricated wood I-joists and glulam beams (engineered wood products), described in ICC-ES evaluation report ESR-2552, have also been evaluated for compliance with the codes noted below as adopted by the Los Angeles Department of Building and Safety (LADBS).

Applicable code editions:

- 2023 *City of Los Angeles Building Code* (LABC)
- 2023 *City of Los Angeles Residential Code* (LARC)

2.0 CONCLUSIONS

The Simpson Strong-Tie® face mount hangers for sawn lumber, structural composite lumber (SCL), prefabricated wood I-joists and glulam beams (engineered wood products), described in Sections 2.0 through 7.0 of the evaluation report ESR-2552, comply with the LABC Chapter 23, and the LARC, and are subjected to the conditions of use described in this supplement.

3.0 CONDITIONS OF USE

The Simpson Strong-Tie® face mount hangers for sawn lumber, structural composite lumber (SCL), prefabricated wood I-joists and glulam beams (engineered wood products), described in this evaluation report supplement, must comply with all of the following conditions:

- All applicable sections in the evaluation report ESR-2552.
- The design, installation, conditions of use and identification are in accordance with the 2021 *International Building Code®* (2021 IBC) provisions noted in the evaluation report ESR-2552.
- The design, installation and inspection are in accordance with additional requirements of LABC Chapters 16 and 17, as applicable.
- The supported end of a joist or beam must be within $^{1}/_{4}$-inch from the supporting member.
- Solid blocking must be required for all joist hangers supporting roof joists having one end twisted more than one-half degree per foot of length relative to the other end, except as specifically noted in the evaluation report.
- Under the LARC, an engineered design in accordance with LARC Section R301.1.3 must be submitted.

This supplement expires concurrently with the evaluation report, reissued March 2024.

ICC-ES Evaluation Reports are not to be construed as representing aesthetics or any other attributes not specifically addressed, nor are they to be construed as an endorsement of the subject of the report or a recommendation for its use. There is no warranty by ICC Evaluation Service, LLC, express or implied, as to any finding or other matter in this report, or as to any product covered by the report.

Copyright © 2024 ICC Evaluation Service, LLC. All rights reserved.

DIVISION: 06 00 00—WOOD, PLASTICS AND COMPOSITES
Section: 06 05 23—Wood, Plastic, and Composite Fastenings

REPORT HOLDER:

SIMPSON STRONG-TIE COMPANY INC.

EVALUATION SUBJECT:

SIMPSON STRONG-TIE® FACE-MOUNT HANGERS FOR SAWN LUMBER, STRUCTURAL COMPOSITE LUMBER (SCL), PREFABRICATED WOOD I-JOISTS AND GLULAM BEAMS (ENGINEERED WOOD PRODUCTS)

1.0 REPORT PURPOSE AND SCOPE

Purpose:

The purpose of this evaluation report supplement is to indicate that the Simpson Strong-Tie® face-mount hangers, described in ICC-ES evaluation report ESR-2552, have also been evaluated for compliance with the codes noted below.

Applicable code editions:

- 2023 *Florida Building Code—Building*
- 2023 *Florida Building Code—Residential*

2.0 CONCLUSIONS

The Simpson Strong-Tie® face-mount hangers, described in Sections 2.0 through 7.0 of ICC-ES evaluation report ESR-2552, comply with the *Florida Building Code—Building*, and the *Florida Building Code—Residential*, provided the design requirements are determined in accordance with the *Florida Building Code—Building* or the *Florida Building Code—Residential,* as applicable. The installation requirements noted in ICC-ES evaluation report ESR-2552 for the 2021 *International Building Code®* meet the requirements of the *Florida Building Code—Building* or the *Florida Building Code—Residential,* as applicable.

Use of the Simpson Strong-Tie® face-mount hangers has also been found to be in compliance with the High-Velocity Hurricane Zone provisions of the *Florida Building Code—Building*, and the *Florida Building Code—Residential* with the following condition:

a. For connections subject to uplift, the connection must be designed for no less than 700 pounds (3114 N).

For products falling under Florida Rule 61G20-3, verification that the report holder's quality assurance program is audited by a quality assurance entity approved by the Florida Building Commission for the type of inspections being conducted is the responsibility of an approved validation entity (or the code official when the report holder does not possess an approval by the Commission).

This supplement expires concurrently with the evaluation report, reissued March 2024.

ICC-ES Evaluation Reports are not to be construed as representing aesthetics or any other attributes not specifically addressed, nor are they to be construed as an endorsement of the subject of the report or a recommendation for its use. There is no warranty by ICC Evaluation Service, LLC, express or implied, as to any finding or other matter in this report, or as to any product covered by the report.

Copyright © 2024 ICC Evaluation Service, LLC. All rights reserved.

TABLE 10—ALLOWABLE LOADS FOR THE HGUS SERIES JOIST HANGERS

MODEL NO.	DIMENSIONS[1] (Inches)			FASTENERS[2] (Quantity-Type)		ALLOWABLE LOADS[3,5,6] (lbs)			
						Uplift[4]	Download		
	W	H	B	Header	Joist[3]	C_D = 1.6	C_D = 1.0	C_D = 1.15	C_D = 1.25
HGUS26	$1^5/_8$	$5^3/_8$	5	20-16d	8-16d	1,040	4,355	4,875	5,230
HGUS28	$1^5/_8$	$7^1/_8$	5	36-16d	12-16d	1,650	7,275	7,275	7,275
HGUS210	$1^5/_8$	$9^1/_8$	5	46-16d	16-16d	2,090	9,100	9,100	9,100
HGUS2.75/10	$2^3/_4$	$8^7/_8$	4	46-16d	16-16d	4,095	9,100	9,100	9,100
HGUS2.75/12	$2^3/_4$	$10^7/_8$	4	56-16d	20-16d	5,205	11,915	13,050	13,545
HGUS2.75/14	$2^3/_4$	$12^7/_8$	4	66-16d	22-16d	5,360	12,900	13,700	14,240
HGUS3.25/10	$3^1/_4$	$8^5/_8$	4	46-16d	16-16d	4,095	9,100	9,100	9,100
HGUS3.25/12	$3^1/_4$	$10^5/_8$	4	56-16d	20-16d	5,205	11,915	13,330	14,290
HGUS26-2	$3^7/_{16}$	$5^7/_{16}$	4	20-16d	8-16d	2,155	4,355	4,875	5,230
HGUS28-2	$3^7/_{16}$	$7^3/_{16}$	4	36-16d	12-16d	3,235	7,460	7,460	7,460
HGUS210-2	$3^7/_{16}$	$9^3/_{16}$	4	46-16d	16-16d	4,095	9,100	9,100	9,100
HGUS46	$3^5/_8$	$5^5/_{16}$	4	20-16d	8-16d	2,155	4,355	4,875	5,230
HGUS48	$3^5/_8$	$7^1/_{16}$	4	36-16d	12-16d	3,235	7,460	7,460	7,460
HGUS410	$3^5/_8$	$9^1/_{16}$	4	46-16d	16-16d	4,095	9,100	9,100	9,100
HGUS412	$3^5/_8$	$10^7/_{16}$	4	56-16d	20-16d	5,205	11,915	13,330	14,290
HGUS414	$3^5/_8$	$12^7/_{16}$	4	66-16d	22-16d	5,360	13,860	14,350	14,350
HGUS26-3	$4^{15}/_{16}$	$5^7/_{16}$	4	20-16d	8-16d	2,155	4,355	4,875	5,230
HGUS28-3	$4^{15}/_{16}$	$7^3/_{16}$	4	36-16d	12-16d	3,235	7,460	7,460	7,460
HGUS210-3	$4^{15}/_{16}$	$9^3/_{16}$	4	46-16d	16-16d	4,095	9,100	9,100	9,100
HGUS212-3	$4^{15}/_{16}$	$10^3/_4$	4	56-16d	20-16d	5,205	11,915	13,330	14,290
HGUS214-3	$4^{15}/_{16}$	$12^3/_4$	4	66-16d	22-16d	5,360	13,860	14,350	14,350
HGUS5.25/10	$5^1/_4$	$9^1/_{16}$	4	46-16d	16-16d	4,095	9,100	9,100	9,100
HGUS5.25/12	$5^1/_4$	$10^5/_8$	4	56-16d	20-16d	5,205	11,915	13,330	14,290
HGUS5.5/8	$5^1/_2$	$6^{15}/_{16}$	4	36-16d	12-16d	3,235	7,460	7,460	7,460
HGUS5.5/10	$5^1/_2$	$8^{15}/_{16}$	4	46-16d	16-16d	4,095	9,100	9,100	9,100
HGUS5.5/12	$5^1/_2$	$10^1/_2$	4	56-16d	20-16d	5,205	11,915	13,330	14,290
HGUS5.5/14	$5^1/_2$	$12^1/_2$	4	66-16d	22-16d	5,515	9,695	9,695	9,695
HGUS5.62/10	$5^5/_8$	$8^7/_8$	4	46-16d	16-16d	4,095	9,100	9,100	9,100
HGUS5.62/12	$5^5/_8$	$10^7/_{16}$	4	56-16d	20-16d	5,205	11,915	13,330	14,290
HGUS5.62/14	55/8	$12^7/_{16}$	4	66-16d	22-16d	5,515	9,695	9,695	9,695
HGUS26-4	$6^9/_{16}$	$5^7/_{16}$	4	20-16d	8-16d	2,155	4,355	4,875	5,230
HGUS28-4	$6^9/_{16}$	$7^3/_{16}$	4	36-16d	12-16d	3,235	7,460	7,460	7,460
HGUS210-4	$6^9/_{16}$	$9^3/_{16}$	4	46-16d	16-16d	4,095	9,100	9,100	9,100
HGUS212-4	$6^9/_{16}$	$10^9/_{16}$	4	56-16d	20-16d	5,205	11,915	13,330	14,290
HGUS214-4	$6^9/_{16}$	$12^9/_{16}$	4	66-16d	22-16d	5,360	13,735	14,360	14,360
HGUS6.88/10	$6^7/_8$	$8^{13}/_{16}$	4	46-16d	16-16d	4,095	9,100	9,100	9,100
HGUS6.88/12	$6^7/_8$	$10^{13}/_{16}$	4	56-16d	20-16d	5,205	11,915	13,330	14,290
HGUS6.88/14	$6^7/_8$	$12^{13}/_{16}$	4	66-16d	22-16d	5,515	9,695	9,695	9,695
HGUS7.25/8	$7^1/_4$	$7^1/_4$	4	36-16d	12-16d	3,235	7,460	7,460	7,460
HGUS7.25/10	$7^1/_4$	$8^5/_8$	4	46-16d	16-16d	4,095	9,100	9,100	9,100
HGUS7.25/12	$7^1/_4$	$10^5/_8$	4	56-16d	20-16d	5,205	11,915	13,330	14,290
HGUS7.25/14	$7^1/_4$	$12^5/_8$	4	66-16d	22-16d	5,515	9,695	9,695	9,695
HGUS7.37/10	$7^3/_8$	$8^9/_{16}$	4	46-16d	16-16d	4,065	9,095	9,095	9,095
HGUS7.37/12	$7^3/_8$	$10^9/_{16}$	4	56-16d	20-16d	5,205	11,915	13,330	14,290
HGUS7.37/14	$7^3/_8$	$12^9/_{16}$	4	66-16d	22-16d	5,515	13,735	14,360	14,360

For **SI:** 1 inch = 25.4 mm, 1 lbf = 4.45 N.

[1]Refer to Figure 10 (this page) for definitions of hanger nomenclature (W, H, B).
[2]Refer to Section 3.2.3 of this report for nail sizes and required minimum physical properties.
[3]Tabulated allowable loads must be selected based on duration of load as permitted by the applicable building code.
[4]Joist nails must be driven at a 45 degree angle through the joist into the header/beam (double shear nailing) to achieve tabulated loads.
[5]Allowable uplift loads have been increased for wind or earthquake loading with no further increase allowed. The allowable uplift loads must be reduced when other load durations govern.
[6]HGUS series hangers provide torsional resistance, which is defined as the moment of not less than 75 pounds (334 N) times the depth of the joist at which the lateral movement of the top or bottom of the joist with respect to the vertical position of the joist is 0.125" (3.2 mm). The height, H, of the joist hanger must be at least 60 percent of the height of the joist unless additional lateral restraint is provided, as designed by others.

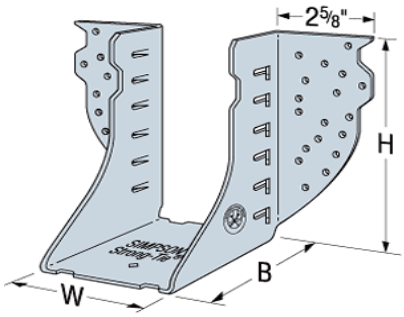

FIGURE 10—HGUS SERIES JOIST HANGER

TABLE 8—ALLOWABLE LOADS FOR THE HUS AND HUSC SERIES HANGERS

MODEL NO.	DIMENSIONS[1] (inches)			COMMON NAILS[2] (Quantity-Type)		ALLOWABLE LOADS[3,4,7] (lbf)			
						Uplift[6]	Download		
	W	H	B	Header	Joist[5]	C_D = 1.6	C_D = 1.0	C_D = 1.15	C_D = 1.25
HUS26	$1^5/_8$	$5^3/_8$	3	14-16d	6-16d	1,320	2,735	3095	3230
HUS28	$1^5/_8$	$7^1/_{16}$	3	22-16d	8-16d	1,760	4095	4095	4095
HUS210	$1^5/_8$	$9^1/_{16}$	3	30-16d	10-16d	2,635	5,450	5,795	5,830
HUS1.81/10	$1^{13}/_{16}$	$8^7/_8$	3	30-16d	10-16d	2,675	5,510	5,830	5,830
HUS46	$3^9/_{16}$	$4^5/_{16}$	2	4-16d	4-16d	1,165	1,090	1,225	1,320
HUS48	$3^9/_{16}$	$6^{15}/_{16}$	2	6-16d	6-16d	1,320	1,630	1,840	1,980
HUS410	$3^9/_{16}$	$8^{15}/_{16}$	2	8-16d	8-16d	3,265	2,175	2,455	2,640
HUS412	$3^9/_{16}$	$10^3/_4$	2	10-16d	10-16d	3,435	2,720	3,070	3,300
HUS26-2	$3^1/_8$	$5^3/_{16}$	2	4-16d	4-16d	1,165	1,090	1,225	1,320
HUS28-2	$3^1/_8$	$7^3/_{16}$	2	6-16d	6-16d	1,320	1,630	1,840	1,980
HUS210-2	$3^1/_8$	$9^3/_{16}$	2	8-16d	8-16d	3,285	2,175	2,455	2,640
HUS212-2	$3^1/_8$	11	2	10-16d	10-16d	3,435	2,720	3,070	3,300

For **SI:** 1 inch = 25.4 mm, 1 pound = 4.45 N.

[1]Refer to Figure 8 (this page) for definitions of hanger nomenclature (W, H, B).
[2]Refer to Section 3.2.3 of this report for nail sizes and required minimum physical properties.
[3]Tabulated allowable loads must be selected based on duration of load as permitted by the applicable building code.
[4]HUS series hangers provide torsional resistance, which is defined as a moment of not less than 75 pounds (334 N) times the depth of the joist at which the lateral movement of the top or bottom of the joist with respect to the vertical position of the joist is 0.125 inch (3.2 mm). The height, H, of the joist hanger must be at least 60 percent of the height of the joist unless additional lateral restraint is provided, as designed by others.
[5]Joist nails must be driven at a 45 degree angle through the joist into the header/beam (double shear nailing) to achieve the tabulated loads.
[6]Allowable uplift loads have been increased for wind or earthquake loading with no further increase is allowed. The allowable uplift loads must be reduced when other load durations govern.
[7]HUS series hangers with widths (W) equal to or greater than $3^9/_{16}$ inches (90 mm) are available with header flanges turned in (concealed) and are identified with the model designation HUSC#.

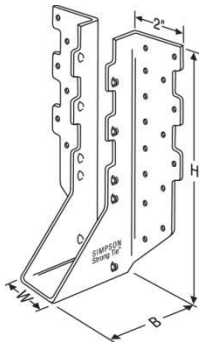

FIGURE 8—HUS SERIES HANGER (See Table 8)

TABLE 6 ALLOWABLE LOADS FOR THE LUS SERIES JOIST HANGERS

MODEL NO.	DIMENSIONS[1] (inches)			COMMON NAILS[2] (Quantity-Type)		ALLOWABLE LOADS[3,4] (lbf)			
	W	H	B	Header	Joist[5]	Uplift[6]	Download		
						C_D = 1.6	C_D = 1.0	C_D = 1.15	C_D = 1.25
LUS24	1 9/16	3 1/8	1 3/4	4-10d	2-10d	435	670	765	820
LUS26	1 9/16	4 3/4	1 3/4	4-10d	4-10d	1,165	865	990	1,060
LUS28	1 9/16	6 5/8	1 3/4	6-10d	4-10d	1,165	1,100	1,260	1,350
LUS210	1 9/16	7 13/16	1 3/4	8-10d	4-10d	1,165	1,335	1,530	1,640
LUS36	2 9/16	5 1/4	2	4-16d	4-16d	1,060	1,030	1,170	1,265
LUS310	2 9/16	7 9/32	2	6-16d	4-16d	1,070	1,315	1,490	1,610
LUS24-2	3 1/8	3 1/8	2	4-16d	2-16d	410	800	905	980
LUS26-2	3 1/8	4 15/16	2	4-16d	4-16d	1,060	1,030	1,170	1,265
LUS28-2	3 1/8	7	2	6-16d	4-16d	1,060	1,315	1,490	1,610
LUS210-2	3 1/8	8 15/16	2	8-16d	6-16d	1,445	1,830	2,075	2,245
LUS214-2	3 1/8	10 15/16	2	10-16d	6-16d	1,445	2,110	2,395	2,590
LUS44	3 9/16	3	2	4-16d	2-16d	410	800	905	980
LUS46	3 9/16	4 3/4	2	4-16d	4-16d	1,060	1,030	1,170	1,265
LUS48	3 9/16	6 3/4	2	6-16d	4-16d	1,060	1,315	1,490	1,610
LUS410	3 9/16	8 3/4	2	8-16d	6-16d	1,445	1,830	2,075	2,245
LUS414	3 9/16	10 3/4	2	10-16d	6-16d	1,445	2,110	2,395	2,590
LUS26-3	4 5/8	4 1/8	2	4-16d	4-16d	1,060	1,030	1,170	1,265
LUS28-3	4 5/8	6 1/4	2	6-16d	4-16d	1,060	1,315	1,490	1,610
LUS210-3	4 5/8	8 13/16	2	8-16d	6-16d	1,445	1,830	2,075	2,245

For **SI:** 1 inch = 25.4 mm, 1 lbf = 4.45 N.

[1]Refer to Figure 6 (this page) for definitions of hanger nomenclature (W, H, B).
[2]Refer to Section 3.2.3 of this report for nail sizes and required minimum physical properties.
[3]Tabulated allowable loads must be selected based on duration of load as permitted by the applicable building code.
[4]LUS Series hangers provide torsional resistance, which is defined as a moment of not less than 75 pounds (334 N) times the depth of the joist at which the lateral movement of the top or bottom of the joist with respect to the vertical position of the joist is 0.125 inch (3.2 mm). The height, H, of the joist hanger must be at least 60 percent of the height of the joist unless additional lateral restraint is provided, as designed by others.
[5]Joist nails must be driven at a 45 degree angle through the joist into the header/beam (double shear nailing) to achieve the tabulated loads.
[6]Allowable uplift loads have been increased for wind or earthquake loading with no further increase is allowed. The allowable uplift loads must be reduced when other load durations govern.

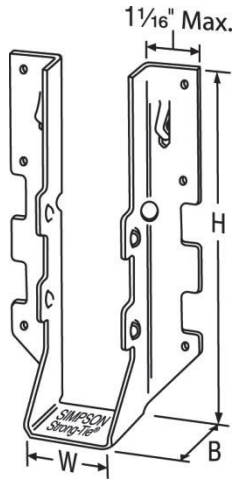

FIGURE 6—LUS SERIES HANGER (See Table 6)

TABLE 7—NAILING SCHEDULES, DIMENSIONS AND ALLOWABLE LOADS FOR HTW, LTW AND MTW TWIST STRAP TIES[5]

STOCK NUMBER	STEEL GAGE	STRAP DIMENSIONS (in.)				FASTENER SCHEDULE		ALLOWABLE UPLIFT LOAD[1,2] C_D = 1.6 (lbs)	
		W	L	L1	L2	Qty [3]	Type [4]	Stud-to-rim joist installation	Truss-to-top – plate installation
HTW16	14	1 1/4	16	5 1/8	5 1/8	16	10d x 1 1/2	1,115	1,355
						16	10d common	1,300	1,355
HTW20	14	1 1/4	20	7 1/8	7 1/8	24	10d x 1 1/2	1,555	1,355
						20	10d common	1,355	1,355
HTW24	14	1 1/4	24	9 1/8	9 1/8	24	10d x 1 1/2	1,555	1,355
						20	10d common	1,355	1,355
HTW28	14	1 1/4	28	11 1/8	11 1/8	24	10d x 1 1/2	1,555	1,355
						20	10d common	1,355	1,355
HTW30	14	1 1/4	30	7	17 1/4	24	10d x 1 1/2	1,555	1,355
						20	10d common	1,355	1,355
HTW30C	14	1 1/4	30	12 1/8	12 1/8	24	10d x 1 1/2	1,555	1,355
						20	10d common	1,355	1,355
LTW12	18	1 1/4	12	4 1/2	4 1/2	12	10d x 1 1/2	770	625
						12	10d common	770	625
LTW16	18	1 1/4	16	6 1/2	6 1/2	12	10d x 1 1/2	770	625
						12	10d common	770	625
LTW18	18	1 1/4	18	7 1/2	7 1/2	12	10d x 1 1/2	770	625
						12	10d common	770	625
LTW20	18	1 1/4	20	8 1/2	8 1/2	12	10d x 1 1/2	770	625
						12	10d common	770	625
MTW12	16	1 1/4	12	4 1/2	4 1/2	14	10d x 1 1/2	1,185	965
						14	10d common	1,185	965
MTW16	16	1 1/4	16	6 1/2	6 1/2	14	10d x 1 1/2	1,185	965
						14	10d common	1,185	965
MTW18	16	1 1/4	18	7 1/2	7 1/2	14	10d x 1 1/2	1,185	965
						14	10d common	1,185	965
MTW20	16	1 1/4	20	8 1/2	8 1/2	14	10d x 1 1/2	1,185	965
						14	10d common	1,185	965
MTW24C	16	1 1/4	24	10 7/16	10 7/16	14	10d x 1 1/2	1,185	965
						14	10d common	1,185	965
MTW28C	16	1 1/4	28	12 7/16	12 7/16	14	10d x 1 1/2	1,185	965
						14	10d common	1,185	965
MTW30C	16	1 1/4	30	13 7/16	13 7/16	14	10d x 1 1/2	1,185	965
						14	10d common	1,185	965
MTW30	16	1 1/4	30	8 5/16	18 9/16	14	10d x 1 1/2	1,185	965
						14	10d common	1,185	965

For **SI:** 1 inch = 25.4 mm, 1 lb = 4.45 N.

[1]Allowable uplift loads have been adjusted for a load duration factor, C_D, of 1.60, corresponding to a ten-minute load duration (i.e., wind or earthquake loading), in accordance with the NDS. The allowable loads do not apply to loads of other durations, and are not permitted to be adjusted for other load durations. See Section 4.1 for additional design requirements.

[2]Allowable uplift loads shown are for installations in sawn lumber or structural composite lumber complying with Section 3.26.2.

[3]Listed fastener quantity is the total required for the connection, with half the tabulated quantity at each end.

[4]See Section 3.26.3 for required nail dimensions and mechanical properties. HTW, LTW and MTW twist strap ties may be installed with either 10d x 1 1/2 or 10d common nails.

[5]Some illustrations for the twist straps show connection that could cause cross-grain tension or bending of the wood during loading if not reinforced sufficiently. In such cases, mechanical reinforcement should be considered.

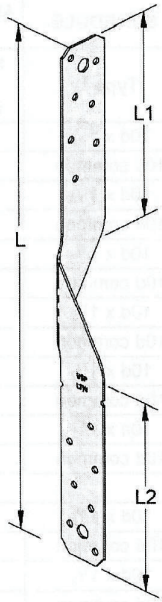

LTW/MTW/HTW

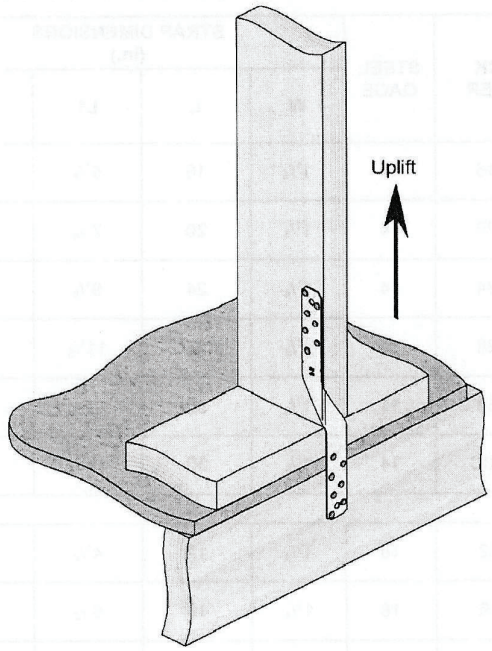

Typical LTW/MTW/HTW
Stud-To-Rim Joist Installation

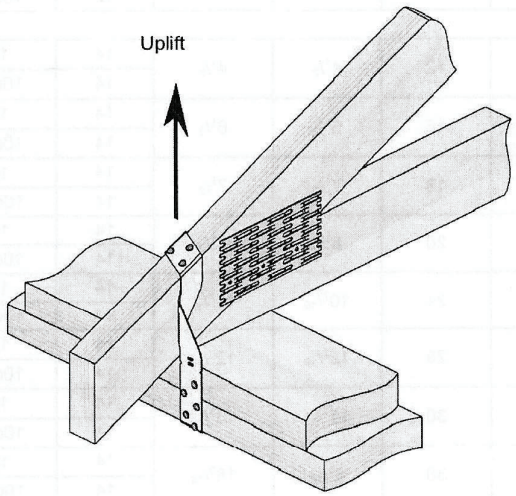

Typical LTW/MTW/HTW
Truss-To-Top Plate Installation

FIGURE 7—DIMENSIONS AND INSTALLATION OF LTW, MTW AND HTW TWIST STRAP TIES

TABLE 13—ALLOWABLE LOADS FOR THE SUR/SUL SERIES JOIST HANGERS

MODEL NO.	DIMENSIONS[1] (inches)					FASTENERS (Quantity-Type)		ALLOWABLE LOADS[2,6,7] (lbs)			
								Uplift[5]	Download		
	W	H	B	A_1	A_2	Header	Joist	C_D=1.6	C_D=1.0	C_D=1.15	C_D=1.25
SUR/L24	$1^{9}/_{16}$	$3^{1}/_{16}$	2	$1^{1}/_{8}$	$1^{1}/_{4}$	4-16d	4-10d x $1^{1}/_{2}$	395	575	650	705
SUR/L26	$1^{9}/_{16}$	5	2	$1^{1}/_{8}$	$1^{5}/_{16}$	6-16d	6-10d x $1^{1}/_{2}$	675	865	980	1,055
SUR/L210	$1^{9}/_{16}$	8	2	$1^{1}/_{8}$	$1^{5}/_{16}$	10-16d	10-10d x $1^{1}/_{2}$	1,445	1,440	1,635	1,760
SUR/L214	$1^{9}/_{16}$	10	2	$1^{1}/_{8}$	$1^{5}/_{16}$	12-16d	12-10d x $1^{1}/_{2}$	1,890	1,730	1,960	2,115
SUR/L1.81/9	$1^{13}/_{16}$	9	3	$1^{5}/_{8}$	$2^{5}/_{16}$	12-16d	2-10d x $1^{1}/_{2}$	210[3,4]	1,730	1,955	1,955
SUR/L1.81/11	$1^{13}/_{16}$	11	3	$1^{5}/_{8}$	$2^{5}/_{16}$	16-16d	2-10d x $1^{1}/_{2}$	210[3,4]	2,300	2,560	2,560
SUR/L1.81/14	$1^{13}/_{16}$	$13^{3}/_{4}$	3	$1^{5}/_{8}$	$2^{5}/_{16}$	20-16d	2-10d x $1^{1}/_{2}$	210[3,4]	2,560	2,560	2,560
SUR/L2.06/9	$2^{1}/_{16}$	$9^{1}/_{16}$	$3^{3}/_{16}$	$1^{5}/_{8}$	$2^{1}/_{8}$	14-16d	2-10d x $1^{1}/_{2}$	210[3]	2,015	2,285	2,465
SUR/L2.06/11	$2^{1}/_{16}$	$11^{1}/_{4}$	$3^{3}/_{16}$	$1^{5}/_{8}$	$2^{1}/_{8}$	16-16d	2-10d x $1^{1}/_{2}$	210[3]	2,300	2,610	2,665
SUR/L2.06/14	$2^{1}/_{16}$	$13^{5}/_{8}$	$3^{3}/_{16}$	$1^{5}/_{8}$	$2^{1}/_{8}$	18-16d	2-10d x $1^{1}/_{2}$	210[3]	2,590	2,665	2,665
SUR/L2.1/9	$2^{1}/_{8}$	$9^{1}/_{16}$	$3^{3}/_{16}$	$1^{9}/_{16}$	$2^{1}/_{8}$	14-16d	2-10d x $1^{1}/_{2}$	210[3]	2,015	2,285	2,465
SUR/L2.1/11	$2^{1}/_{8}$	$11^{3}/_{16}$	$3^{3}/_{16}$	$1^{9}/_{16}$	$2^{1}/_{8}$	16-16d	2-10d x $1^{1}/_{2}$	210[3]	2,300	2,610	2,665
SUR/L2.1/14	$2^{1}/_{8}$	$13^{9}/_{16}$	$3^{3}/_{16}$	$1^{9}/_{16}$	$2^{1}/_{8}$	18-16d	2-10d x $1^{1}/_{2}$	210[3]	2,590	2,665	2,665
SUR/L2.37/9	$2^{3}/_{8}$	$8^{15}/_{16}$	$3^{3}/_{16}$	$1^{5}/_{16}$	$2^{1}/_{8}$	14-16d	2-10d x $1^{1}/_{2}$	210[3]	2,015	2,285	2,465
SUR/L2.37/11	$2^{3}/_{8}$	$11^{3}/_{16}$	$3^{3}/_{16}$	$1^{5}/_{16}$	$2^{1}/_{8}$	16-16d	2-10d x $1^{1}/_{2}$	210[3]	2,300	2,610	2,665
SUR/L2.37/14	$2^{3}/_{8}$	$13^{7}/_{16}$	$3^{3}/_{16}$	$1^{5}/_{16}$	$2^{1}/_{8}$	18-16d	2-10d x $1^{1}/_{2}$	210[3]	2,590	2,665	2,665
SUR/L2.56/9	$2^{9}/_{16}$	$8^{13}/_{16}$	$3^{3}/_{16}$	$1^{1}/_{8}$	$2^{1}/_{8}$	14-16d	2-10d x $1^{1}/_{2}$	210[3]	2,015	2,285	2,465
SUR/L2.56/11	$2^{9}/_{16}$	$11^{3}/_{16}$	$3^{3}/_{16}$	$1^{1}/_{8}$	$2^{1}/_{8}$	16-16d	2-10d x $1^{1}/_{2}$	210[3]	2,300	2,615	2,665
SUR/L2.56/14	$2^{9}/_{16}$	$13^{5}/_{16}$	$3^{3}/_{16}$	$1^{1}/_{8}$	$2^{1}/_{8}$	18-16d	2-10d x $1^{1}/_{2}$	210[3]	2,590	2,665	2,665
SUR/L26-2	$3^{1}/_{8}$	$4^{15}/_{16}$	$2^{5}/_{8}$	$1^{1}/_{2}$	$2^{3}/_{8}$	8-16d	4-16d x $2^{1}/_{2}$	725	1.150	1,305	1,325
SUR/L210-2	$3^{1}/_{8}$	$8^{11}/_{16}$	$2^{5}/_{8}$	$1^{7}/_{16}$	$2^{3}/_{8}$	14-16d	6-16d x $2^{1}/_{2}$	1,160	2,015	2,285	2,345
SUR/L214-2	$3^{1}/_{8}$	$12^{11}/_{16}$	$2^{7}/_{16}$	$1^{7}/_{16}$	$2^{3}/_{8}$	18-16d	8-16d x $2^{1}/_{2}$	1,505	2,345	2,345	2,345
SUR/L46	$3^{9}/_{16}$	$4^{3}/_{4}$	$2^{5}/_{8}$	1	$2^{3}/_{8}$	8-16d	4-16d	730	1,150	1,305	1,325
SUR/L410	$3^{9}/_{16}$	$8^{1}/_{2}$	$2^{5}/_{8}$	1	$2^{3}/_{8}$	14-16d	6-16d	1,160	2,015	2,285	2,345
SUR/L414	$3^{9}/_{16}$	$12^{1}/_{2}$	$2^{5}/_{8}$	1	$2^{3}/_{8}$	18-16d	8-16d	1,490	2,345	2,345	2,345

For **SI:** 1 inch = 25.4 mm, 1 lbf = 4.45 N.

[1]Refer to Figure 13a (this page) for definitions of hanger nomenclature (W, H, B, A1, A2).
[2]Tabulated allowable loads must be selected based on duration of load as permitted by the applicable building code.
[3]Optional triangle holes may be filled (requires web stiffeners for I-joist) for additional uplift resistance. When a total of six 10d x $1^{1}/_{2}$-inch-long nails are installed into the joist for 9- and 11-inch models, an uplift value of 825 lbs may be used. When a total of eight 10dx$1^{1}/_{2}$" nails are installed into the joist for 14-inch models, an uplift value of 1,190 lbs may be used.
[4]Uplift value based on use of solid sawn lumber or LVL joist member. When using an I-joist as the joist member, allowable uplift must be taken as 140 lbs.
[5]The uplift loads have been increased for wind or earthquake loading with no further increase allowed. The allowable uplift loads must be reduced when other load durations govern.
[6]SUR/L series hangers provide torsional resistance, which is defined as a moment of not less than 75 pounds (334 N) times the depth of the joist at which the lateral movement of the top or bottom of the joist with respect to its vertical position is 0.125 inch (3.2 mm). The height (H) of the hanger must be at least 60 percent of the height of the joist unless additional lateral restraint is provided, as designed by others.
[7]The 2-2x and a 4x SUR/L models are available with the A2 flanges concealed and are specified with the model designation SUR/LC

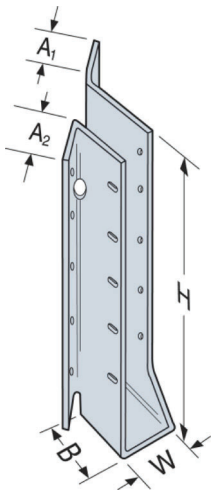

FIGURE 13A—SUL SERIES JOIST HANGER

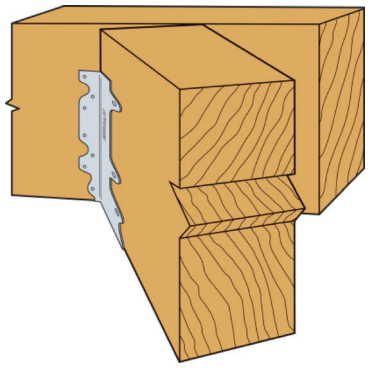

FIGURE 13B—TYPICAL SUR HANGER INSTALLATION

Valley Detail - ASCE 7-16: 180 mph, 30' Mean Height, Partially Enclosed, Exp. C, Kzt=1.00

Top Chord 2x4 SP #2N, SPF #1/#2, DF-L #2 or better.
Bot Chord 2x4 SP #2N or SPF #1/#2 or better.
Webs 2x4 SP #3, SPF #1/#2, DF-L #2 or better.

** Attach each valley to every supporting truss with:
535# connection or with (1) Simpson H2.5A or equivalent connector for
ASCE 7-16 180 mph. 30' Mean Height, Part. Enc. Building, Exp. C, Wind TC DL=5 psf, Kzt = 1.00
Or
ASCE 7-16 160 mph. 30' Mean Height, Part. Enc. Building, Exp. D, Wind TC DL=5 psf, Kzt = 1.00

Bottom chord may be square or pitched cut as shown.

Valleys short enough to be cut as solid triangular members from a single 2x6, or larger as required, shall be permitted in lieu of fabricating from separate 2x4 members.

All plates shown are Alpine Wave Plates.

Unless specified otherwise on engineer's sealed design, for vertical valley webs taller than 7-9" apply 2x4 "T" reinforcement, 80% length of web, same species and grade or better, attached with 10d box (0.128" x 3.0") nails at 6" o.c. In lieu of "T" reinforcement, 2x4 Continuous Lateral Restraint applied at mid-length of web is permitted with diagonal bracing as shown in DRWG BRCLBANC1014.

Top chord of truss beneath valley set must be braced with:
properly attached, rated sheathing applied prior to valley truss installation.
Or
Purlins at 24" o.c. or as otherwise specified on engineer's sealed design
Or
By valley trusses used in lieu of purlin spacing as specified on Engineer's sealed design.

*** Note that the purlin spacing for bracing the top chord of the truss beneath the valley is measured along the slope of the top chord.

++ Larger spans may be built as long as the vertical height does not exceed 14'-0".

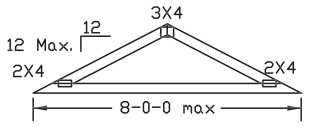

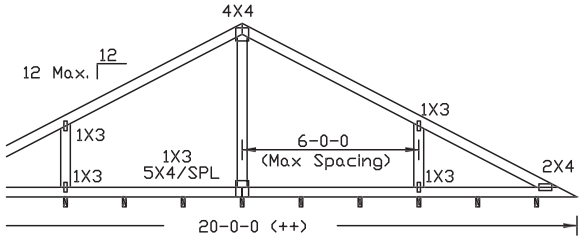

Supporting trusses at 24" o.c. maximum spacing.

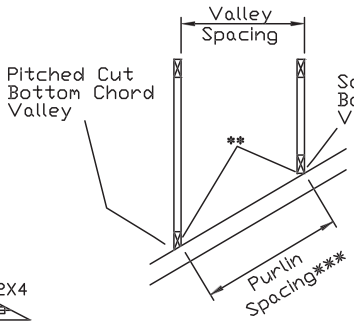

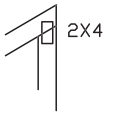

Stubbed Valley End Detail

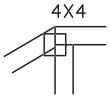

Optional Hip Joint Detail

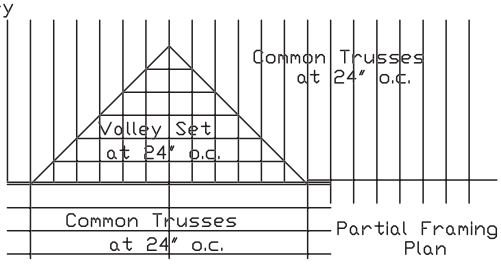

Partial Framing Plan

ALPINE
AN ITW COMPANY
155 Harlem Ave
North Building, 4th Floor
Glenview, IL 60025

WARNING READ AND FOLLOW ALL NOTES ON THIS DRAWING!
IMPORTANT FURNISH THIS DRAWING TO ALL CONTRACTORS INCLUDING THE INSTALLERS.

Trusses require extreme care in fabricating, handling, shipping, installing and bracing. Refer to and follow the latest edition of BCSI (Building Component Safety Information, by TPI and SBCA) for safety practices prior to performing these functions. Installers shall provide temporary bracing per BCSI. Unless noted otherwise, top chord shall have properly attached structural sheathing and bottom chord shall have a properly attached rigid ceiling. Locations shown for permanent lateral restraint of webs shall have bracing installed per BCSI sections B3, B7 or B10, as applicable. Apply plates to each face of truss and position as shown above and on the Joint Details, unless noted otherwise. Refer to drawings 160A-Z for standard plate positions.

Alpine, a division of ITW Building Components Group Inc. shall not be responsible for any deviation from this drawing, any failure to build the truss in conformance with ANSI/TPI 1, or for handling, shipping, installation & bracing of trusses.

A seal on this drawing or cover page listing this drawing, indicates acceptance of professional engineering responsibility solely for the design shown. The suitability and use of this drawing for any structure is the responsibility of the Building Designer per ANSI/TPI 1 Sec.2.

For more information see this job's general notes page and these web sites:
ALPINE: www.alpineitw.com; TPI: www.tpinst.org; SBCA: www.sbcacomponents.com; ICC: www.iccsafe.org

TC LL	30	30	40PSF	REF	VALLEY DETAIL
TC DL	20	15	7PSF	DATE	01/26/2018
BC DL	10	10	10 PSF	DRWG	VAL180160118
BC LL	0	0	0PSF		
TOT. LD.	60	55	57PSF		
DUR.FAC.	1.25/1.33	1.15	1.15		
SPACING		24.0"			

BCSI-B1 SUMMARY SHEET - GUIDE FOR HANDLING, I

Spans over 60′ may require complex permanent bracin

GENERAL NOTES

Trusses are not marked in any way to identify the frequency or location of temporary lateral restraint and diagonal bracing. Follow the recommendations for handling, installing and temporary restraining and bracing of trusses. Refer to BCSI – Guide to Good Practice for Handling, Installing, Restraining & Bracing of Metal Plate Connected Wood Trusses*** for more detailed information.

Truss Design Drawings may specify locations of permanent lateral restraint or reinforcement for individual truss members. Refer to the BCSI-B3*** for more information. All other permanent bracing design is the responsibility of the building designer.

NOTAS GENERALES

*Los trusses no están marcados de ningún modo que identifique la frecuencia o localización de restricción lateral y arriostre diagonal temporales. Use las recomendaciones de manejo, instalación, restricción y arriostre temporal de los trusses. Vea el folleto BCSI – Guía de Buena Práctica para el Manejo, Instalación, Restricción y Arriostre de los Trusses de Madera Conectados con Placas de Metal*** para información más detallada.*

*Los dibujos de diseño de los trusses pueden especificar las localizaciones de restricción lateral permanente o refuerzo en los miembros individuales del truss. Vea la hoja resumen BCSI-B3*** para más información. El resto de los diseños de arriostres permanentes son la responsabilidad del diseñador del edificio.*

W A R N I N G !

WARNING! The consequences of improper handling, erecting, installing, restraining and bracing can result in a collapse of the structure, or worse, serious personal injury or death.

¡ADVERTENCIA! El resultado de un manejo, levantamiento, instalación, restricción y arrisotre incorrecto puede ser la caída de la estructura o aún peor, heridos o muertos.

CAUTION! Banding and truss plates have sharp edges. Wear gloves when handling and safety glasses when cutting banding.

¡CAUTELA! Chapas de metal tienen bordes afilados. Lleve guantes y lentes protectores cuando corte las ataduras.

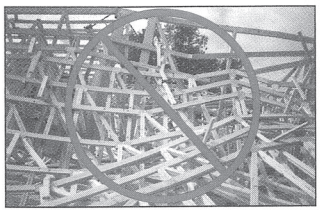

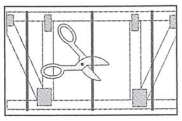

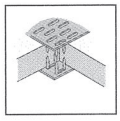

HANDLING — *MANEJO*

NOTICE Avoid lateral bending.
Evite la flexión lateral.

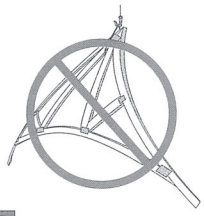

NOTICE The contractor is responsible for properly receiving, unloading and storing the trusses at the jobsite. Unload trusses to smooth surface to prevent damage.

El contratista tiene la responsabilidad de recibir, descargar y almacenar adecuadamente los trusses en la obra. Descargue los trusses en la tierra liso para prevenir el daño.

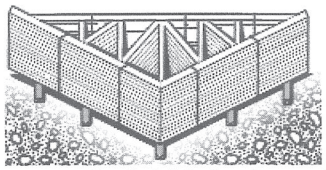

☑ Trusses may be unloaded directly on the ground at the time of delivery or stored temporarily in contact with the ground after delivery. If trusses are to be stored horizontally for more than one week, place blocking of sufficient height beneath the stack of trusses at 8′ (2.4 m) to 10′ (3 m) on-center (o.c.).

Los trusses pueden ser descargados directamente en el suelo en aquel momento de entrega o almacenados temporalmente en contacto con el suelo después de entrega. Si los trusses estarán guardados horizontalmente para más de una semana, ponga bloqueando de altura suficiente detrás de la pila de los trusses a 8 hasta 10 pies en centro (o.c.).

☑ For trusses stored for more than one week, cover bundles to protect from the environment.

Para trusses guardados por más de una semana, cubra los paquetes para protegerlos del ambiente.

Refer to BCSI*** for more detailed information pertaining to handling and jobsite storage of trusses.

*Vea el folleto BCSI*** para información más detallada sobre el manejo y almacenado de los trusses en área de trabajo.*

CAUTION! Use special care in windy weather or near power lines and airports.

¡CAUTELA! Utilice cuidado especial en días ventosos o cerca de cables eléctricos o de aeropuertos.

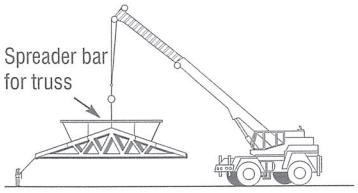

☑ Use proper rigging and hoisting equipment.

Use equipo apropiado para levantar e improvisar.

⊘ **DO NOT** store unbraced bundles upright.

NO almacene verticalmente los trusses sueltos.

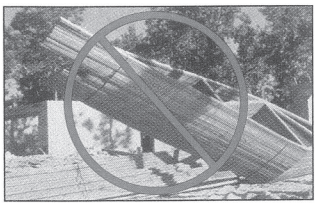

⊘ **DO NOT** store on uneven ground.

NO almacene en tierra desigual.

HOISTING AND PLACEMENT OF TRUSS BUNDLES
RECOMENDACIONES PARA LEVANTAR PAQUETES DE TRUSSES

⊘ **DON'T** overload the crane.

NO sobrecargue la grúa.

⊘ **NEVER** use banding to lift a bundle.

NUNCA use las ataduras para levantar un paquete.

☑ A single lift point may be used for bundles of top chord pitch trusses up to 45′ (13.7 m) and parallel chord trusses of 30′ (9.1 m) or less.
Use at least two lift points for bundles with trusses up to 60′ (18.3 m).
Use at least 3 lift points for bundles with trusses greater than 60′ (18.3 m).

Puede usar un solo lugar de levantar para paquetes de trusses de la cuerda superior hasta 45′ y trusses de cuerdas paralelas de 30′ o menos. Puede usar dos puntos de levantar para paquetes más de 60 pies.
Use por lo menos tres puntos de levantar para paquetes más de 60 pies.

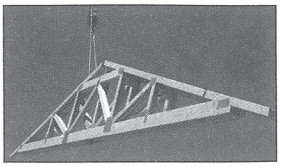

WARNING! Do not over load supporting structure with truss bundle.

¡ADVERTENCIA! No sobrecargue la estructura apoyada con el paquete de trusses.

☑ Place truss bundles in stable position.

Puse paquetes de trusses en una posición estable.

MECHANICAL HOISTING RECOMMENDATIONS FOR SINGLE TRUSSES
RECOMENDACIONES PARA LEVANTAR TRUSSES INDIVIDUALES

☑ Hold each truss in position with the erection equipment until top chord temporary lateral restraint is installed and the truss is fastened to the bearing points.

Sostenga cada truss en posición con equipo de grúa hasta que la restricción lateral temporal de la cuerda superior esté instalado y el truss está asegurado en los soportes.

NOTICE Using a single pick-point at the peak can damage the truss.

El uso de un solo lugar en el pico para levantar puede hacer daño al truss.

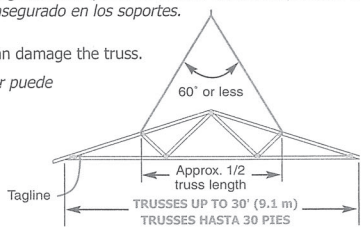

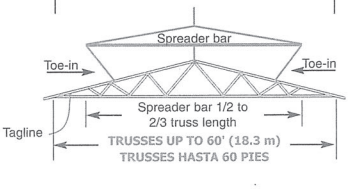

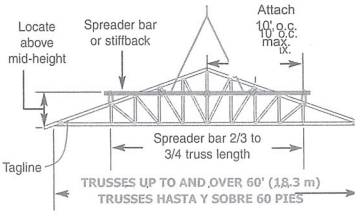

INSTALLATION OF SINGLE TRUSSES BY HAND
RECOMMENDACCIONES DE LEVANTAMIENTO DE TRUSSES INDIVIDUALES POR LA MANO

☑ Trusses 20′ (6.1 m) or less, support near peak.

Soporte cerca al pico los trusses de 20 pies o menos.

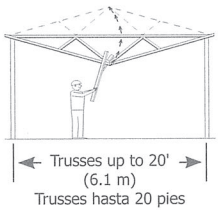

☑ Trusses 30′ (9.1 m) or less, support at quarter points.

Soporte de los cuartos de tramo los trusses de 30 pies o menos.

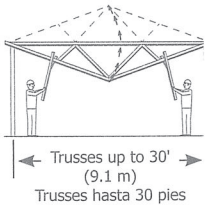

TEMPORARY RESTRAINT & BRACING
RESTRICCIÓN Y ARRIOSTRE TEMPORAL

NOTICE Refer to BCSI-B2*** for more information.

*Vea el resumen BCSI-B2*** para más información.*

☑ Locate ground braces for first truss directly in line with all rows of top chord temporary lateral restraint (see table in the next column).

Coloque los arriostres de tierra para el primer truss directamente en línea con cada una de las filas de restricción lateral temporal de la cuerda superior (vea la tabla en la próxima columna).

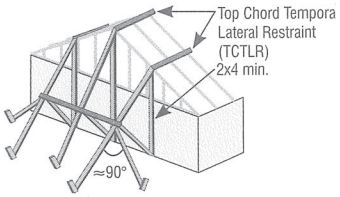

⊘ **DO NOT** walk on unbraced trusses.

NO camine en trusses sueltos.

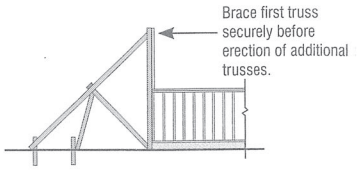

¡ADVERTENCIA! **HOJA RESUMEN DE LA GUÍA DE BUENA PRÁCTIC**

Vanos más de 60 pies pueden requerir arriostre p

STALLING, RESTRAINING AND BRACING OF TRUSSES
Please always consult a Registered Design Professional.

B1

STEPS TO SETTING TRUSSES
LAS MEDIDAS DE LA INSTALACIÓN DE LOS TRUSSES

☑ **1)** Install ground bracing. **2)** Set first truss and attach securely to ground bracing. **3)** Set next 4 trusses with short member temporary lateral restraint (see below). **4)** Install top chord diagonal bracing (see below). **5)** Install web member plane diagonal bracing to stabilize the first five trusses (see below). **6)** Install bottom chord temporary lateral restraint and diagonal bracing (see below). **7)** Repeat process on groups of four trusses until all trusses are set.

1) Instale los arriostres de tierra. 2) Instale el primero truss y ate seguramente al arriostre de tierra. 3) Instale los próximos 4 trusses con restricción lateral temporal de miembro corto (vea abajo). 4) Instale el arriostre diagonal de la cuerda superior (vea abajo). 5) Instale arriostre diagonal para los planos de los miembros secundarios para estabilice los primeros cinco trusses (vea abajo). 6) Instale la restricción lateral temporal y arriostre diagonal para la cuerda inferior (vea abajo). 7) Repita éste procedimiento en grupos de cuatro trusses hasta que todos los trusses estén instalados.

NOTICE Refer to BCSI-B2*** for more information.
*Vea el resùmen BCSI-B2*** para más información.*

RESTRAINT/BRACING FOR ALL PLANES OF TRUSSES
RESTRICCIÓN/ARRIOSTRE PARA TODOS PLANOS DE TRUSSES

☑ This restraint & bracing method is for all trusses except 3x2 and 4x2 parallel chord trusses (PCTs). See top of next column for temporary restraint and bracing of PCTs.

Este método de restricción y arriostre es para todo trusses excepto trusses de cuerdas paralelas (PCTs) 3x2 y 4x2. Vea la parte superior de la columna para la restricción y arriostre temporal de PCTs.

1) TOP CHORD — *CUERDA SUPERIOR*

Truss Span *Longitud de Tramo*	Top Chord Temporary Lateral Restraint (TCTLR) Spacing *Espaciamiento del Arriostre Temporal de la Cuerda Superior*
Up to 30' (9.1 m)	10' (3 m) o.c. max.
30' (9.1 m) – 45' (13.7 m)	8' (2.4 m) o.c. max.
45' (13.7 m) – 60' (18.3 m)	6' (1.8 m) o.c. max.
60' (18.3 m) – 80' (24.4 m)*	4' (1.2 m) o.c. max.

*Consult a Registered Design Professional for trusses longer than 60' (18.3 m).
**Consulte a un Professional Registrado de Diseño para trusses más de 60 pies.*

☑ See BCSI-B2*** for TCTLR options.
*Vea el BCSI-B2*** para las opciones de TCTLR.*

NOTICE Refer to BCSI-B3*** for Gable End Frame restraint/bracing/ reinforcement information.

*Para información sobre restricción/arriostre/refuerzo para Armazones Hastiales vea el resumen BCSI-B3****

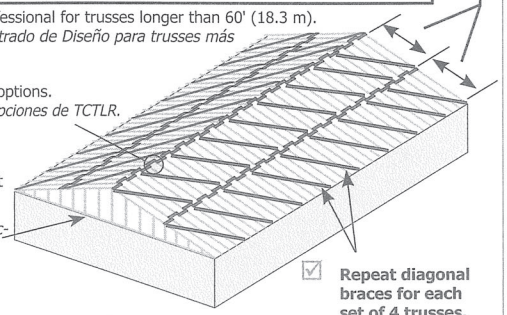

☑ **Repeat diagonal braces for each set of 4 trusses.**
Repita los arrisotres diagonales para cada grupo de 4 trusses.

Note: Ground bracing not shown for clarity.

2) WEB MEMBER PLANE — *PLANO DE LOS MIEMBROS SECUNDARIOS*

NOTICE

LATERAL RESTRAINT & DIAGONAL BRACING ARE VERY IMPORTANT

¡LA RESTRICCIÓN LATERAL Y EL ARRIOSTRE DIAGONAL SON MUY IMPORTANTES!

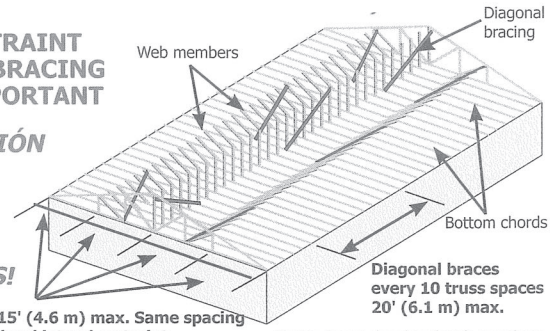

Note: Some chord and web members not shown for clarity.

3) BOTTOM CHORD — *CUERDA INFERIOR*

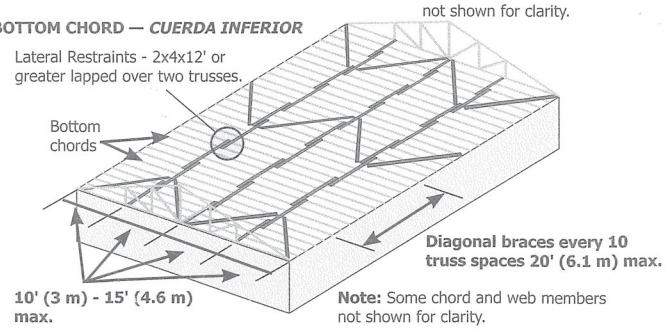

Note: Some chord and web members not shown for clarity.

RESTRAINT & BRACING FOR 3x2 AND 4x2 PARALLEL CHORD TRUSSES
RESTRICCIÓN Y ARRIOSTRE PARA TRUSSES DE CUERDAS PARALELAS 3X2 Y 4X2

NOTICE Refer to BCSI-B7*** for more information.

*Vea el resumen BCSI-B7*** para más información.*

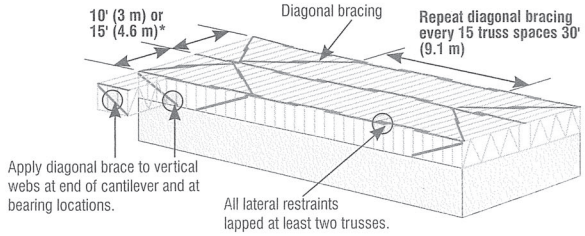

***Top chord temporary lateral restraint spacing shall be 10' (3 m) o.c. max. for 3x2 chords and 15' (4.6 m) o.c. for 4x2 chords.**

INSTALLING — *INSTALACIÓN*

☑ Tolerances for Out-of-Plane.
Tolerancias para Fuera-de-Plano.

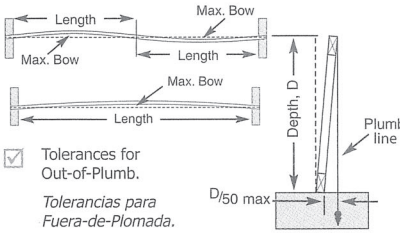

☑ Tolerances for Out-of-Plumb.
Tolerancias para Fuera-de-Plomada.

Out-of-Plumb	
D/50	D (ft.)
1/4" (6 mm)	1' (0.3 m)
1/2" (13 mm)	2' (0.6 m)
3/4" (19 mm)	3' (0.9 m)
1" (25 mm)	4' (1.2 m)
1-1/4" (32 mm)	5' (1.5 m)
1-1/2" (38 mm)	6' (1.8 m)
1-3/4" (45 mm)	7' (2.1 m)
2" (51 mm)	≥8' (≥2.4 m)

Out-of-Plane	
Max. Bow	Truss Length
3/4" (19 mm)	12.5' (3.8 m)
7/8" (22 mm)	14.6' (4.5 m)
1" (25 mm)	16.7' (5.1 m)
1-1/8" (29 mm)	18.8' (5.7 m)
1-1/4" (32 mm)	20.8' (6.3 m)
1-3/8" (35 mm)	22.9' (7.0 m)
1-1/2" (38 mm)	25.0' (7.6 m)
1-3/4" (45 mm)	29.2' (8.9 m)
2" (51 mm)	≥33.3' (10.1 m)

CONSTRUCTION LOADING
CARGA DE CONSTRUCCIÓN

⊘ **DO NOT** proceed with construction until all lateral restraint and bracing is securely and properly in place.

***NO** proceda con la construcción hasta que todas las restricciones laterales y los arriostres estén colocados en forma apropiada y segura.*

⊘ **DO NOT** exceed maximum stack heights. Refer to BCSI-B4*** for more information.

NO** exceda las alturas máximas de montón. Vea el resumen BCSI-B4 para más información.*

Maximum Stack Height for Material on Trusses	
Material	Height
Gypsum Board	12" (305 mm)
Plywood or OSB	16" (406 mm)
Asphalt Shingles	2 bundles
Concrete Block	8" (203 mm)
Clay Tile	3-4 tiles high

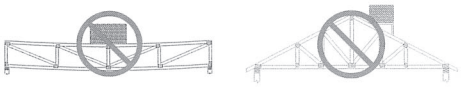

⊘ **DO NOT** overload small groups or single trusses.
***NO** sobrecargue pequeños grupos o trusses individuales.*

⊘ **NEVER** stack materials near a peak or at mid-span.
***NUNCA** amontone los materiales cerca de un pico.*

☑ Place loads over as many trusses as possible.
Coloque las cargas sobre tantos trusses como sea posible.

☑ Position loads over load bearing walls.
Coloque las cargas sobre las paredes soportantes.

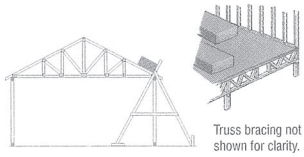

ALTERATIONS — ALTERACIONES

NOTICE Refer to BCSI-B5.***

*Vea el resumen BCSI-B5.****

⊘ **DO NOT** cut, alter, or drill any structural member of a truss unless specifically permitted by the truss design drawing.

***NO** corte, altere o perfore ningún miembro estructural de un truss, a menos que esté específicamente permitido en el dibujo del diseño del truss.*

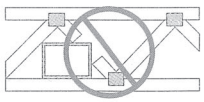

NOTICE Trusses that have been overloaded during construction or altered without the Truss Manufacturer's prior approval may render the Truss Manufacturer's limited warranty null and void.

Trusses que se han sobrecargado durante la construcción o han sido alterados sin la autorización previa del Fabricante de Trusses, pueden hacer nulo y sin efecto la garantía limitada del Fabricante de Trusses.

***Contact the Component Manufacturer for more information or consult a Registered Design Professional for assistance.**
To view a non-printing PDF of this document, visit www.sbcindustry.com/b1.

NOTE: The truss manufacturer and truss designer rely on the presumption that the contractor and crane operator (if applicable) are professionals with the capability to undertake the work they have agreed to do on any given project. If the contractor believes it needs assistance in some aspect of the construction project, it should seek assistance from a competent party. The methods and procedures outlined in this document are intended to ensure that the overall construction techniques employed will put the trusses into place SAFELY. These recommendations for handling, installing, restraining and bracing trusses are based upon the collective experience of leading personnel involved with truss design, manufacture and installation, but must, due to the nature of responsibilities involved, be presented only as a GUIDE for use by a qualified building designer or contractor. It is not intended that these recommendations be interpreted as superior to the building designer's design specification for handling, installing, restraining and bracing trusses and it does not preclude the use of other equivalent methods for restraining/bracing and providing stability for the walls, columns, floors, roofs and all the interrelated structural building components as determined by the contractor. Thus, SBCA and TPI expressly disclaim any responsibility for damages arising from the use, application, or reliance on the recommendations and information contained herein.

SBC ASSOCIATION — WTCA WOOD TRUSS COUNCIL
6300 Enterprise Lane • Madison, WI 53719
608/274-4849 • www.sbcindustry.com

TPI TRUSS PLATE INSTITUTE
218 N. Lee St., Ste. 312 • Alexandria, VA 22314
703/683-1010 • www.tpinst.org

B1WARN11x17 100610

This document summarizes the information provided in Section B1 of the 2008 Edition of Building Component Safety Information BCSI – Guide to Good Practice for Handling, Installing, Restraining & Bracing of Metal Plate Connected Wood Trusses. Copyright © 2004-2010 Structural Building Components Association and Truss Plate Institute. All rights reserved. This guide or any part thereof may not be reproduced in any form without the written permission of the publishers. This document should appear in more than one color. Printed in the United States of America.

PARA EL MANEJO, INSTALACIÓN, RESTRICCIÓN Y ARRIOSTRE DE LOS TRUSSES
manente complejo. Por favor, siempre consulte a un Profesional Registrado de Diseño.