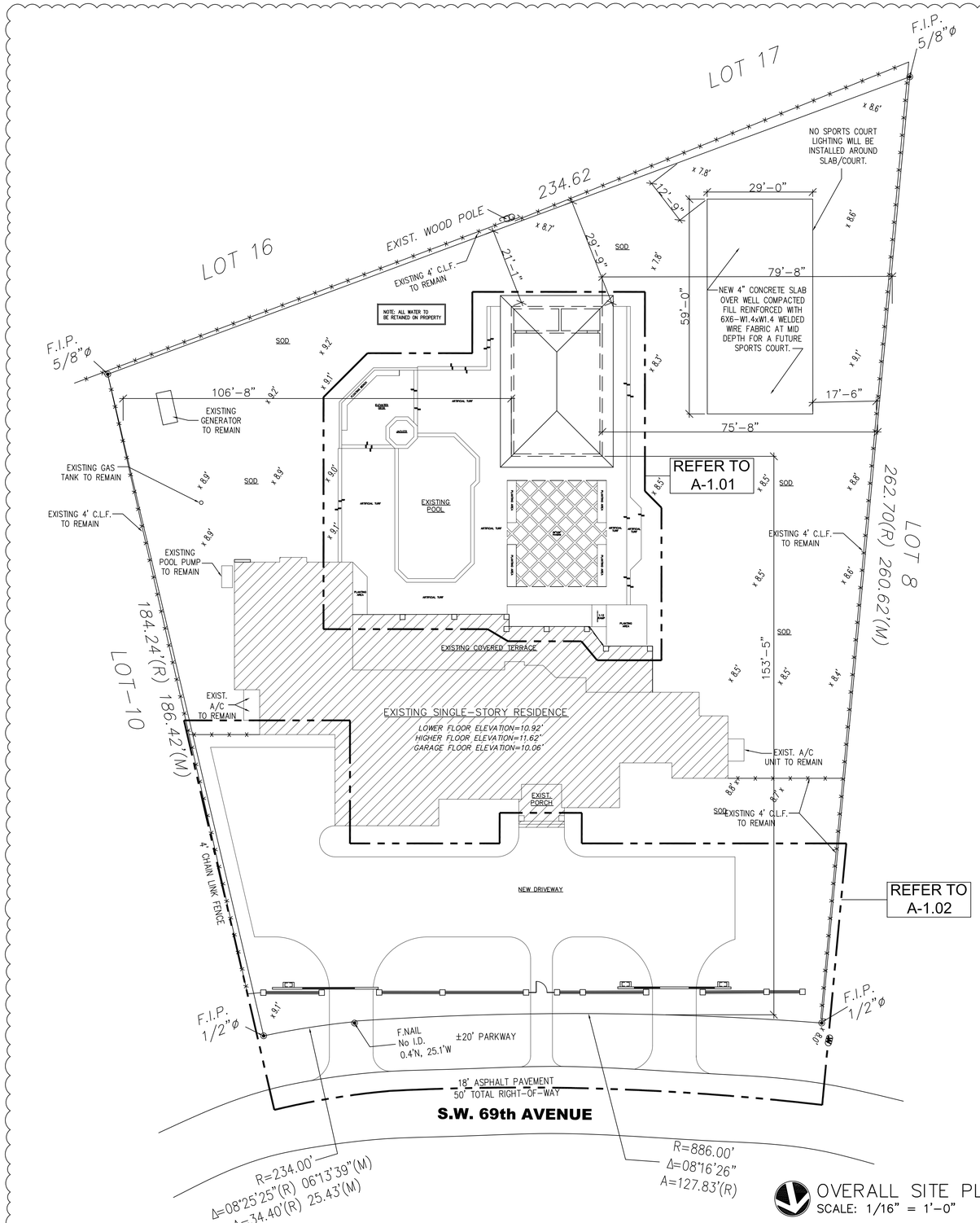

OVERALL SITE PLAN
SCALE: 1/16" = 1'-0"

GENERAL GRADING & DRAINAGE NOTE

FOR ANY SCOPE OR DETAILS RELATED TO STORM DRAINAGE, GRADING AND DRAINAGE PLEASE REFER TO THE CIVIL SET OF PLANS SUBMITTED FOR INFORMATION.

PW CONDITIONS OF PERMIT:
Condition of Permit – PW –SFR –D/W
1. No fill of ANY KIND can be brought on site or to the ROW outside of the building footprint.
2. No runoff generated from the driveway is permitted to discharge directly to the ROW or adjacent properties.
3. The ROW swale is to be graded using the Village PW Standard.
4. No trees are to be planted in the ROW before a conditional approval of the rough grading of the swale has been approved by Public Works.
5. No shrubs are to be planted in the ROW and any existing shrubs are to be removed.
6. No IRRIGATION, LIGHTING, or ELECTRICAL COMPONENTS of any kind may be installed in the ROW.
7. All proposed trees in the ROW will be planted a minimum of 7' from the edge of pavement to the face of the tree and will be of a type, kind, and spacing as approved by the Village arborist. Arborist contact information is: Rick Carr – ccarr@pinecrest-fl.gov
8. Any decorative d/w in the ROW shall have an 8"W x 12"D, 3,000-psi, fiber mesh concrete header curb located between the asphalt and the proposed d/w.
9. No materials of ANY kind will be stored for any length of time on the public swale.
10. Existing sidewalks will be maintained at all times, free of any loose material, and open to pedestrian traffic at all times. No vehicles can park on the sidewalk at any time.
11. Any sidewalk crossed by a d/w approach must be replaced with 6"thick sidewalk and extend to the next adjacent whole flag on either side of the new approach.
12. ALL work conducted in the ROW will implement the applicable FDOT Standard Index 600 Series for MOT.

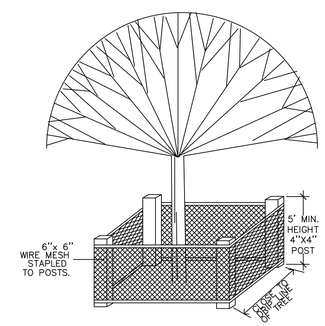

PROTECTION FOR EXISTING TREES TO REMAIN
N.T.S.

SOIL STATEMENT :

SOIL AT THIS SITE IS SAND & ROCK ADEQUATE TO SUPPORT THE DESIGN LOAD OF 2000 PSF. AFTER EXCAVATION SIGNED AND SEALED LETTER WILL BE SUBMITTED BY THE ARCHITECT OR THE ENGINEER ATTESTING THAT THE SITE HAS BEEN OBSERVED AND THE FOUNDATION CONDITIONS ARE SIMILAR TO THOSE UPON WHICH THE DESIGN IS BASED ON.

TERMITE NOTE :

AS PER F.B.C. 2023, A WEATHER-RESISTANT JOB-SITE POSTING BOARD SHALL BE PROVIDED TO RECIEVE DUPLICATE TREATMENT CERTIFICATES AS EACH REQUIRED PROTECTIVE TREATMENT IS COMPLETED, PROVIDING A COPY FOR THE PERSON THE PERMIT IS ISSUED TO AND ANOTHER COPY FOR THE BUILDING PERMIT FILES. THE TREATMENT CERTIFICATE SHALL PROVIDE THE PRODUCT USED, IDENTITY OF THE APPLICATOR, TIME AND DATE OF THE TREATMENT, SITE LOCATION, AREA TREATED, CHEMICAL USED, PERCENT CONCENTRATION AND NUMBER OF GALLONS USED, TO ESTABLISH A VERIFIABLE RECORD OF PROTECTIVE TREATMENT. IF THE SOIL CHEMICAL BARRIER METHOD FOR TERMITE PREVENTION IS USED, FINAL EXTERIOR TREATMENT SHALL BE COMPLETED PRIOR TO FINAL BUILDING APPROVAL.

AS PER F.B.C. 2023, A PERMANENT SIGN WHICH IDENTIFIES THE TERMITE TREATMENT PROVIDOR AND NEED FOR REINSPECTION AND TREATMENT CONTRACT RENEWAL SHALL BE PROVIDED. THE SIGN SHALL BE POSTED NEAR THE WATER HEATER OR ELECTRIC PANEL.

THE TRIANGLE OF VISIBILTY, SHALL NOT CONTAIN OBSTRUCTION TO CROSS VISIBILITY AT A HEIGHT BETWEEN 30" AND 8' ABOVE PAVEMENT.

NOTE:
CALL 811 (AT LEAST 72 HOURS BEFORE WORK STARTS) TO IDENTIFY AND CLEARLY MARK THE LOCATION OF ALL BURIED UTILITIES IN THE PROPERTY IF APPLICABLE.

GRADING NOTES:
1. NO GRADING SHALL OCCUR WITHIN THE DRIP-LINE OF ANY EXISTING TREE.
2. NO GRADING SHALL OCCUR BEYOND THE PROPERTY LINE.
3. ALL SHADOW RETENTION AREA (SRA) SHALL BE GRADED GRADUALLY TO THE LOW POINT SPECIFIED ON THE PLAN. THESE AREAS WILL CATCH ONSITE WATER FOR PLAN MATERIAL AS WELL AS CREATE THE FIRST BARRIER IN FILTRATION BEFORE ENTERING THE STORM WATER SYSTEM.
4. ENSURE POSITIVE DRAINAGE AWAY FROM ALL STRUCTURES.
5. ALL SHRUB AND GROUNDCOVER AREAS ARE TO BE 3"-4" BELOW FINISHED LEVEL OF ALL ADJACENT HARDSCAPE (TYPICAL).
6. ALL TURF AREAS TO HAVE SMOOTH TRANSITION FROM FINISHED LEVEL OF ALL ADJACENT HARDSCAPE.
7. ALL STEP TREADS TO SLOPE AWAY FROM STEP FACE AT MINIMUM OF 1% PLEASE REFER TO DETAILS FOR INFORMATION
8. ALL RAINWATER TO BE RETAINED ON PROPERTY.

NOTE:
– ALL PROPOSED WORK IN R.O.W. MUST BE REVIEWED AND APPROVED BY PUBLIC WORKS DEPARTMENT.

ALL EXISTING TREES ARE TO REMAIN.
NO TREES ARE TO BE RELOCATED OR REMOVED.
NO TREE MITIGATION IS REQUIRED.

A SEPARATE PERMIT AND PRODUCT CONTROL APPROVAL, WHEN APPLICABLE, IS REQUIRED FOR THE FOLLOWING ITEMS:

STRUCTURAL GLAZING	WOOD TRUSSES	DOORS	ROOFING	WINDOWS
RIDGE VENTILATION	CURTAIN WALLS	MULLIONS	SIGNS	GLASS WALL
PRECAST SYSTEMS	HANDRAILS	RAILS	FENCES	
STORM SHUTTERS	STEEL JOISTS	STORE FRONT	AWNINGS	

Q DESIGN STUDIO
ARCHITECTURE & PLANNING
License No AR99532
Q Design Studio, LLC
8000 SW 88th Court
Miami, FL 33173
T. 305.401.4950
E: John.Quintana10@gmail.com

CONSULTANTS

PROJECT NAME:
GOMEZ DRIVEWAY & BACKYARD REMODEL

Digitally signed by John A Quintana
Reason: I am the author of this document
Date: 2025.04.01 21:38:40-04'00'

OWNER:
WILLIAM GOMEZ & DANIELLA VILAR

11040 SW 69th AVENUE
PINECREST, FL 33156

JOB NUMBER: 2024.01
DATE: 02/17/24

REVISION
1 BUILDING DEPT. COMMENTS - AUG. 2024
2 BUILDING DEPT. COMMENTS - SEPT. 2024
3 ZONING COMMENTS & UPDATED SURVEY

SEAL:
STATE OF FLORIDA · JOHN A QUINTANA · 99532 · REGISTERED ARCHITECT

John Alexander Quintana AR99532

DRAWING TITLE:
OVERALL SITE PLAN

DRAWING NO:
A1.00