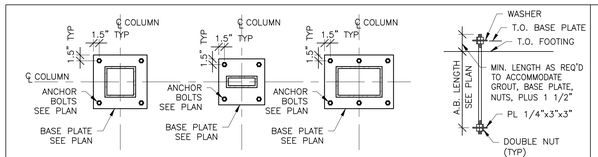

BASE PLATE DETAILS

ANCHOR BOLT DETAIL

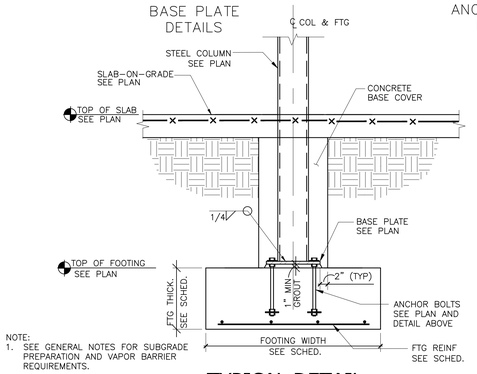

NOTE:
1. SEE GENERAL NOTES FOR SUBGRADE PREPARATION AND VAPOR BARRIER REQUIREMENTS.

TYPICAL DETAIL STEEL COLUMN TO FOOTING CONNECTION

(10)

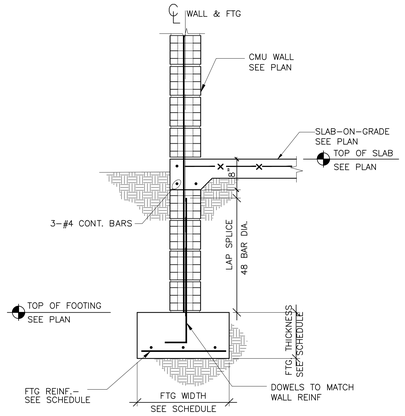

NOTES:
1. GROUT ALL CELLS AT CMU WALL IN CONTACT WITH SOIL.
2. SEE GENERAL NOTES FOR SUBGRADE PREPARATION AND VAPOR BARRIER REQUIREMENTS.

TYPICAL DETAIL EXTERIOR LOAD-BEARING CMU WALL TO FOOTING CONNECTION

(7)

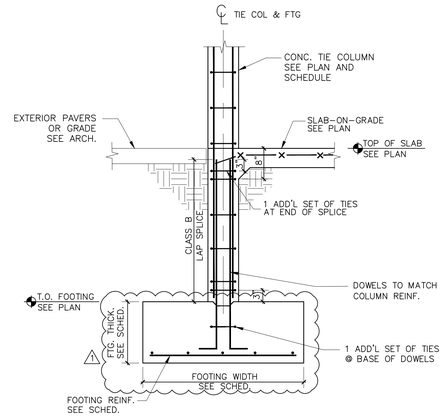

NOTE:
1. SEE GENERAL NOTES FOR SUBGRADE PREPARATION AND VAPOR BARRIER REQUIREMENTS.

TYPICAL DETAIL EXT. CONCRETE COLUMN OR TIE COLUMN TO FOOTING CONNECTION

(4)

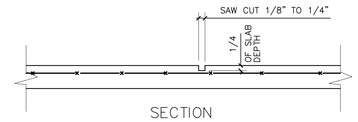

SECTION

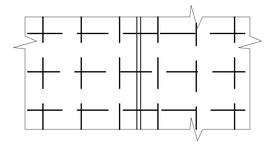

PLAN

NOTES:
1. SEE PLAN FOR SLAB THICKNESS AND REINFORCING.
2. SEE GENERAL NOTES AND GEOTECHNICAL REPORT FOR SUBGRADE PREPARATION.
3. SEE GENERAL NOTES FOR VAPOR BARRIER REQUIREMENTS.
4. MAKE SAW CUT AS SOON AS SLAB IS ABLE TO SUPPORT WEIGHT OF WORKERS AND SAWING EQUIPMENT WITHOUT DAMAGE TO FINISH SURFACE OF SLAB.
5. PREFERABLY MAKE SAW CUT IN COOLER MORNING HOURS.
6. MAXIMUM JOINT SPACING BETWEEN CONTROL JOINTS SHALL BE 10 FT. EA. WAY (UNLESS OTHERWISE SHOWN ON THE DRAWINGS).

TYPICAL DETAIL CONTROL JOINT SLAB-ON-GRADE

(1)

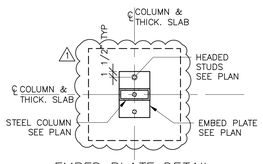

EMBED PLATE DETAIL

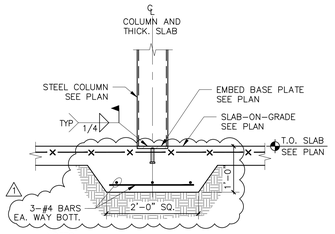

NOTES:
1. SEE GENERAL NOTES FOR SUBGRADE PREPARATION AND VAPOR BARRIER REQUIREMENTS

TYPICAL DETAIL STEEL COLUMN TO THICKENED SLAB CONNECTION

(11)

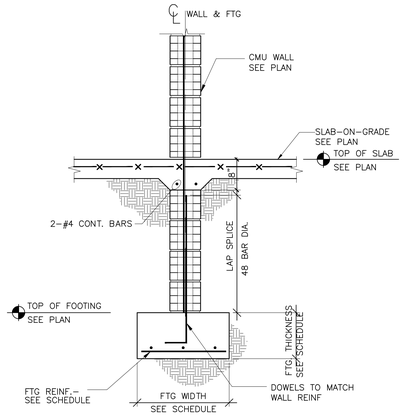

NOTES:
1. GROUT ALL CELLS AT CMU WALL IN CONTACT WITH SOIL.
2. SEE GENERAL NOTES FOR SUBGRADE PREPARATION AND VAPOR BARRIER REQUIREMENTS.

TYPICAL DETAIL INTERIOR LOAD-BEARING CMU WALL TO FOOTING CONNECTION

(8)

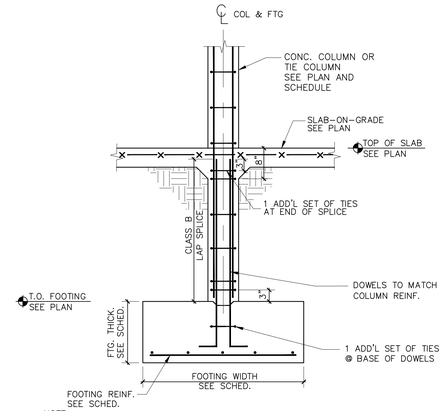

NOTE:
1. SEE GENERAL NOTES FOR SUBGRADE PREPARATION AND VAPOR BARRIER REQUIREMENTS.

TYPICAL DETAIL INT. CONCRETE COLUMN OR TIE COLUMN TO FOOTING CONNECTION

(5)

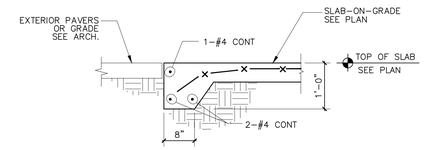

NOTES:
1. SEE GENERAL NOTES FOR SUBGRADE AND VAPOR BARRIER REQUIREMENTS.

TYPICAL DETAIL THICKENED SLAB EDGE SLAB-ON-GRADE

(2)

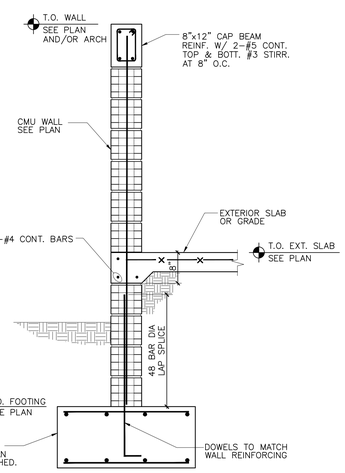

TYPICAL DETAIL FREE-STANDING SITE CMU WALL TO FOOTING CONNECTION

(12)

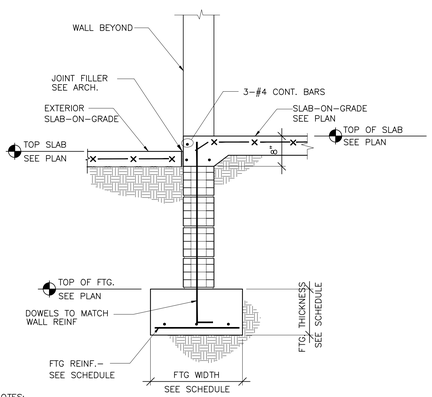

NOTES:
1. GROUT ALL CELLS AT CMU WALL IN CONTACT WITH SOIL.
2. SEE GENERAL NOTES FOR SUBGRADE PREPARATION AND VAPOR BARRIER REQUIREMENTS.
3. COORDINATE WITH ARCH. DWGS. DIMENSIONS AND LOCATION OF ANY SLAB DEPRESSIONS REQUIRED AT DOORS AND/OR GLAZING SYSTEMS (NOT SHOWN FOR CLARITY).

TYPICAL DETAIL CMU WALL TO FOOTING CONNECTION AT EXTERIOR DOOR OPENING

(9)

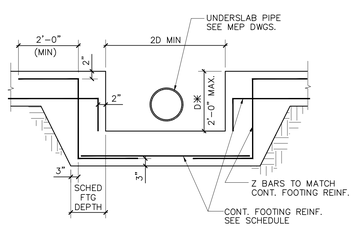

NOTES:
1. DIMENSION MARKED THUS (✱) TO BE IN 8" MODULES TO MATCH BLOCK COURSING.
2. COORDINATE DIMENSION "D" WITH PIPE INVERT ELEVATION SO THAT PIPE IS PLACED ABOVE TOP OF FOOTING.
3. PROVIDE DOWELS TO MATCH CMU OR CONCRETE WALL VERTICAL REINFORCING IN SIZE AND LOCATION. WALL NOT SHOWN FOR CLARITY.
4. REFER TO MEP DWGS. FOR PIPE SIZE AND INVERT ELEVATIONS.

TYPICAL DETAIL STEP FOOTING AT UNDERSLAB PIPE PENETRATIONS

(6)

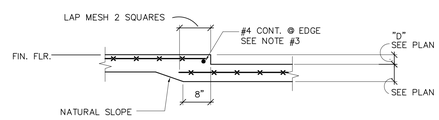

FLOOR DEPRESSION (D ≤ 6")

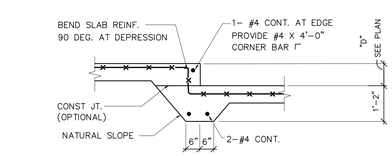

FLOOR DEPRESSION (6" < D ≤ 2'-0")

NOTES:
1. COORDINATE DEPTH AND LOCATION OF ALL FLOOR DEPRESSIONS WITH THE ARCH. DRAWINGS.
2. SLAB DEPRESSIONS ARE SHOWN ON PLAN THUS:
3. PROVIDE 1-#4 X 4'-0" (TOP) CORNER BAR AT INTERIOR CORNERS OF DEPRESSIONS.

TYPICAL DETAIL FLOOR DEPRESSIONS SLAB-ON-GRADE

(3)

This item has been digitally signed and sealed by Carlos F. Sanz, PE, on July 25, 2024. Printed copies of this document are not considered signed and sealed and the signature must be verified on any electronic copies.

FAO ARCHITECTURE
401 LINCOLN ROAD SUITE 8-5 MIAMI BEACH, FLORIDA 33139 P:786.448.5630

PROJECT NO: 2305

CLIENT:
RONALDO FL2, LLC
1200 BISCAYNE BLVD.
MIAMI , FLORIDA 33181

REVISIONS:
1 VILLAGE OF PINECREST/WASA/ DERM COMMENTS 07/25/2024

CFS ENGINEERING GROUP, INC.
STRUCTURAL ENGINEERS
185 NW 108TH STREET
MIAMI SHORES, FLORIDA 33168

ARPE ENGINEERING, LLC
MEP ENGINEERING
2020 PONCE DE LEON BLVD. STE. 1002
CORAL GABLES, FLORIDA 33134

ALL LANDSCAPE DATA, INC
LANDSCAPE ARCHITECT
4459 NW 97THCOURT
DORAL, FLORIDA 33178

NEW LEAF ENVIRONMENTAL, LLC
ISA CERTIFIED ARBORIST.
57 SILVER SPRINGS DRIVE
KEY LARGO, FLORIDA 33037

TERRA CIVIL ENGINEERING, LLC
CIVIL ENGINEERING
4011 WEST FLAGLER ST., STE. 404
MIAMI, FLORIDA 33134

CASA ROBLES 131

6545 SW 131ST STREET, PINECREST, FLORIDA 33156

PROJECT DESCRIPTION: SINGLE FAMILY RESIDENCE

FAO ARCHITECTURE LLC.
DRAWINGS, SPECIFICATIONS, AND OTHER DOCUMENTS, INCLUDING THOSE IN ELECTRONIC FORM, PREPARED BY FAO ARCHITECTURE LLC AND THE CONSULTANTS ARE INSTRUMENTS OF SERVICE FOR USE SOLELY WITH RESPECT TO THIS PROJECT. THE ARCHITECT AND THE CONSULTANTS SHALL BE DEEMED THE AUTHORS AND OWNERS OF THEIR RESPECTIVE INSTRUMENTS OF SERVICE AND SHALL RETAIN ALL COMMON LAW, STATUTORY AND OTHER RESERVED RIGHTS, INCLUDING COPYRIGHTS.

SEAL:
CARLOS F. SANZ LICENSE No. 51500 Carlos F Sanz 2024.07.25 22:41:43-04'00' STATE OF FLORIDA PROFESSIONAL ENGINEER
CARLOS F. SANZ PE 51500

PHASE: CONSTRUCTION DOCUMENTS

ISSUE DATE: JUNE 4, 2024

SHEET TITLE: DETAILS FOUNDATION / SLAB-ON-GRADE

SHEET:

S-401