ENGINEERING EXPRESS®

ENGINEERINGEXPRESS.COM
POSTAL ADDRESS:
2234 NORTH FEDERAL HWY #7664
BOCA RATON, FL 33431

Technical Evaluation Report

DIVISION: 23 08 00 – COMMISSIONING OF HVAC

THIS DOCUMENT CONTAINS (16) PAGES.
ENGINEER DIGITAL OR ORIGINAL HAND SEAL REQUIRED FOR USE.
COPIES ARE NOT VALID FOR PERMIT.

(Subject to Renew January 1, 2026 or next code cycle)

EVALUATION SUBJECT: **TRANE Nv-SERIES SYSTEMS** TER-23-68094

REPORT HOLDER:
MITSUBISHI ELECTRIC TRANE US HVAC LLC
1340 SATELLITE BLVD
SUWANEE, GA, 30024, USA
(678) 376-2912 | METAHVAC.COM

NOTE: THE GRAPHICAL DEPICTIONS IN THIS REPORT ARE FOR ILLUSTRATIVE PURPOSES ONLY AND MAY DIFFER IN APPEARANCE.

SCOPE OF EVALUATION (compliance with the following codes):

THIS IS A STRUCTURAL (WIND) PERFORMANCE EVALUATION ONLY. NO ELECTRICAL OR TEMPERATURE PERFORMANCE RATINGS OR CERTIFICATIONS ARE OFFERED OR IMPLIED HEREIN.
UNDER NO CIRCUMSTANCE DOES THIS PERFORMANCE EVALUATION GUARANTEE, IMPLY, OR STATE PERFORMANCE OF THE UNIT IS MAINTAINED DURING OR AFTER A DESIGN EVENT.

This Product Evaluation Report is being issued in accordance with the requirements of the **Florida Building Code Seventh Edition (2020) & Eighth Edition (2023)** per ASCE 7, FBC Building Ch. 16, FBC Building Sections 104.11 & 1522.2, FBC Existing Building Sections 707.1 & 707.2, FBC Mechanical 301.15, FBC Residential M1202.1 & M1301.1, FS 471.025, and Broward County Administrative Provisions 107.3.4. This report is also in accordance with the **International Building & Residential Codes (2012, 2015, 2018, & 2021).** The product noted in this report has been tested and/or evaluated as summarized herein.

IN ACCORDANCE WITH THESE CODES EACH OF THESE REPORTS MUST BEAR THE ORIGINAL SIGNATURE & RAISED SEAL OR DIGITAL SEAL OF THE EVALUATING ENGINEER.

SUBSTANTIATING DATA:
• Product Evaluation Documents
Substantiating documentation has been submitted to provide this TER and is summarized in the sections below.
• Structural Engineering Calculations
Structural engineering calculations have been prepared which evaluate the product based on comparative and/or rational analysis to qualify the following design criteria:

- Max. allowable lateral & uplift wind pressures certified herein
- Max. allowable sliding forces, uplift forces, & overturning moments (see Unit Reactions from Wind Guide on last page)
- Tie-down configuration and anchor capacity for concrete, aluminum, and steel host substrates (host by others).
- Unit panel wind pressure connection integrity

Calculation summary is included in this TER and appears herein.

LIMITATIONS & CONDITIONS OF USE:
Use of the product(s) listed herein shall be in strict accordance with this TER as noted herein and manufacturer-provided model specifications. Installation shall conform to the minimum standards stated in the referenced building code(s) in addition to the specifications and limitations stated herein. See herein for complete limitations & conditions of use.

OPTIONS:
This evaluation is valid for the models described herein. The critical unit designs have been determined and used in this evaluation. Any structural changes outside of the design as described herein would void this certification.

UNIT CASING MATERIALS:
25ga galv. steel equivalent to ASTM A653 CS cold-rolled steel. Removable top & side covers secured with #8 SAE 1016 SMS screws. Unit integrated feet shall be 0.039" galv. steel equivalent to ASTM A653 CS cold-rolled steel. Knockouts provided for utility & control connections Contact Report Holder for further unit construction information.

STRUCTURAL PERFORMANCE:
Models referenced herein are subject to the following design limitations:

Maximum-Rated ASD Wind Pressures*:
± 119 psf Lateral, 94 psf Uplift

- Required design wind pressures shall be determined according to the guide provided in the Appendix (see last page of this report) or on a site-specific basis in accordance with ASCE 7 and applicable sections of the building code(s) being referenced in accordance with ASD methodology.
- Required design wind pressures shall be less than or equal to the maximum pressures listed herein.
- *Maximum-Rated ASD Wind Pressures indicate the maximum pressures that all units listed herein are approved for. Valid for at-grade, wall-mounted, and rooftop applications. See limitations herein.
- Valid for use inside and outside the High-Velocity Hurricane Zone (HVHZ).
- Site-specific wind analysis may produce alternate limitations provided that the maximum-rated wind pressures stated herein are not exceeded.

VISIT ECALC.IO/TRANE
FOR ENGINEER CERTIFIED ORIGINALS & MORE INFORMATION ABOUT THIS DOCUMENT OR SCAN THE QR CODE TO THE RIGHT >
VISIT ENGINEERINGEXPRESS.COM/STORE FOR ADDITIONAL PLANS, REPORTS & RESOURCES

ORIGINAL SIGNATURE AND RAISED SEAL
OR DIGITAL SEAL REQUIRED TO BE VALID PER CODE:

RICHARD NEET LICENSE No. P.E. 86488 STATE OF FLORIDA PROFESSIONAL ENGINEER
SIGNED:
Digitally signed by Richard Neet
Reason: PRINTED COPIES OF THIS DOCUMENT ARE NOT CONSIDERED SIGNED & SEALED. SIGNATURE MUST BE VERFIEID ON ANY ELECTRONIC COPIES
Date: 2024.06.05 10:36:10 -04'00'

THIS DOCUMENT CAN ONLY BE USED FOR ONE PERMIT SUBMITTED BY June 26, 2024
VALID ONLY FOR ZIP CODE: 33156
FOR USE ONLY BY: EXPRESS PERMITTING
Richard Neet FL PE86488 CA-9885

This item has been digitally signed and sealed by RICHARD NEET on the date adjacent to the seal. Printed copies of this document are not considered signed and sealed. FRAUD ALERT: PRINTED ORIGINALS MUST HAVE RAISED SEAL & PDF PLANS MUST HAVE A VERIFIED ELECTRONIC SIGNATURE OR IT IS FRAUDULENT. TO VERIFY VISIT ECALC.IO/DS TO LEARN MORE. REPORT FRAUDULENT USE OF THIS DOCUMENT TO TEAM@ENGINEERINGEXPRESS.COM

DIGITAL SEAL NOTICE: IF THIS DOCUMENT IS DIGITALLY SIGNED, THIS ITEM HAS BEEN DIGITALLY SIGNED BY THE ABOVE-SIGNING ENGINEER ON THE DATE ADJACENT TO THE SEAL. **PRINTED COPIES OF THIS DOCUMENT ARE NOT CONSIDERED SIGNED AND SEALED AND THE SIGNATURE MUST BE VERIFIED ON ANY ELECTRONIC COPIES**. VISIT ECALC.IO/DS FOR MORE INFORMATION.
PRINTED DOCUMENT NOTICE: IF THIS DOCUMENT IS PRINTED **& DOES NOT CONTAIN AN ENGINEER'S ORIGINAL SIGNATURE & SEAL, THIS DOCUMENT IS VOID & NOT VALID FOR USE. PHOTOCOPIES ARE NOT PERMITTED FOR USE.**

Copyright © Engineering Express® All Rights Reserved

The codes referenced above define APPROVED SOURCE (Section 202) as: "An independent person, firm or corporation, approved by the building official, who is competent and experienced in the application of engineering principles to materials, methods or systems analyses." Engineering Express® professionals meet the competency requirements as defined in the codes referenced herein and can seal their work. Engineering Express® is regularly engaged in conducting and providing engineering evaluations of single-element and full-scale building systems tests.

MODEL INFORMATION

Cabinet Group	Model Number	Unit Dimensions (in)			Operating Weight (lb)
		Width	Depth	Height	
Group I	NTXSPF09/12*112A*	31.50	11.25	21.63	83
	NTX/YSST09/12/15*112A*	31.50	11.25	21.63	79~84
	NTXSMT09/12/15/18*112A*	31.50	11.25	21.63	73~81
	NTXSPB/H06/09/12*112A*	31.50	11.25	21.63	81~83
	NTXSKS09/12/15*112A*	31.50	11.25	21.63	66~80
	NTXSMT09/12*111A*	31.50	11.25	21.63	73
	NTXSSH09/12/15*112A*	31.50	11.25	21.63	118~119
	NTXSEL09/12/18*112A*	31.50	11.25	21.63	73~81
Group II	NTX/YSST30/36*112A*	33.06	13.00	33.44	121
	NTXSKS18/24/30/36*112A*	33.06	13.00	34.63	129
	NTXSSH18/24*112A*	33.06	13.00	34.63	118~120
	NTX/YSST18/24*112A*	33.06	13.00	34.63	118~119
	NTXSMT24*112A*	33.06	13.00	34.63	121
	NTXSPB/H15/18*112A*	33.06	13.00	34.63	124
	NTXMMX20*122**	33.06	13.00	27.94	126
	NTXSPF15/18*112A*	33.06	13.00	34.63	124
	NTXSEL24*112A*	33.06	13.00	34.63	121
	NTXSKH09/12/15/18*112A*	33.06	13.00	34.63	129~131
Group III	NTXMMX24/30*132**	37.41	13.00	31.34	137
	NTXMMX36*142**	37.41	13.00	31.34	139
	NTXSKH24*112A*	37.41	13.00	37.13	190
	NTXMMX42*152**	37.41	13.00	41.27	189
	NTXMPH20*122**	37.41	13.00	41.27	187
	NTXMPH24/30*132**	37.41	13.00	41.27	189
Group IV	NTXSKH30/36*112A*	41.34	13.00	52.69	261
	NTXMSM36/48/60*14/82A*	41.34	13.00	52.69	271~302
	NTXMSH36/42/48*14/5/82A*	41.34	13.00	52.69	278
Group V	NTXMSM72/96/120*1123A*	41.34	18.11	65.43	432

MODEL INFORMATION NOTES

Unit dimensions listed are unit net dimensions (as opposed to packing/shipping dimensions). Unit weights listed are unit net/operating weights (as opposed to unit gross/packing/shipping weights).

Cabinet Groups were designated by this firm based on unit size, exterior panel layout, and unit construction. See details on the following page for sample units from each Cabinet Group and Panel Designations (designated for reference in the Panel Integrity Summary section; see herein).

The model information listed herein is based on information provided by the client. Unit appearance may vary. Please contact Report Holder for more information.

Copyright © Engineering Express® All Rights Reserved

CABINET GROUPS & PANEL DESIGNATIONS (Continued on Next Page)

Note: Images shown are for illustration purposes only, actual units may differ.

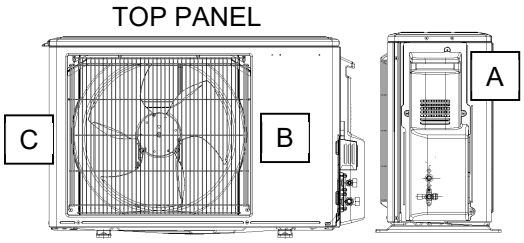

1 CABINET GROUP I
SCALE: NTS MULTIPLE VIEWS

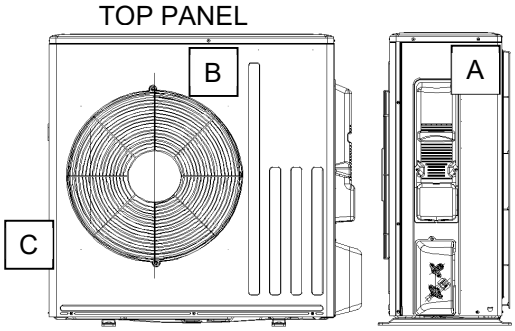

2 CABINET GROUP II
SCALE: NTS MULTIPLE VIEWS

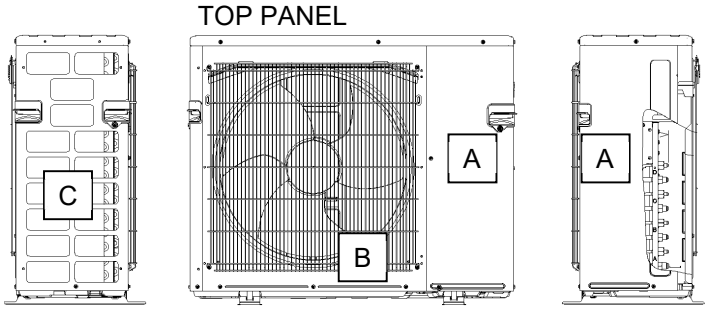

3 CABINET GROUP III
SCALE: NTS MULTIPLE VIEWS

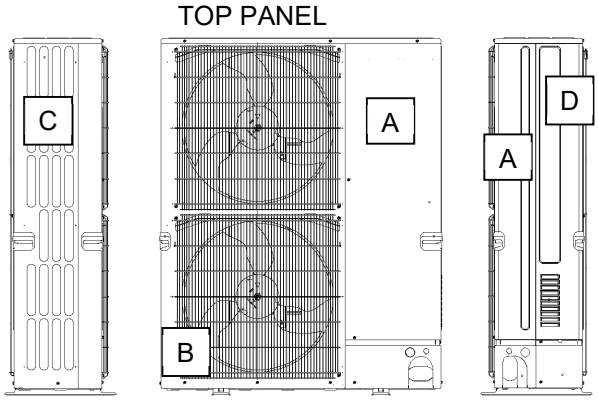

4 CABINET GROUP IV
SCALE: NTS MULTIPLE VIEWS

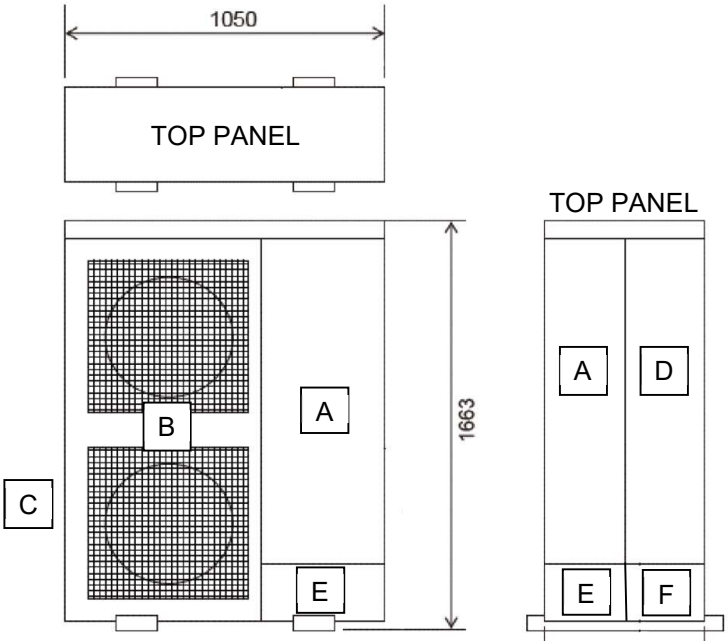

5 CABINET GROUP V
SCALE: NTS MULTIPLE VIEWS

Copyright © Engineering Express® All Rights Reserved

CABINET GROUPS & PANEL DESIGNATIONS (Continued from Previous Page)

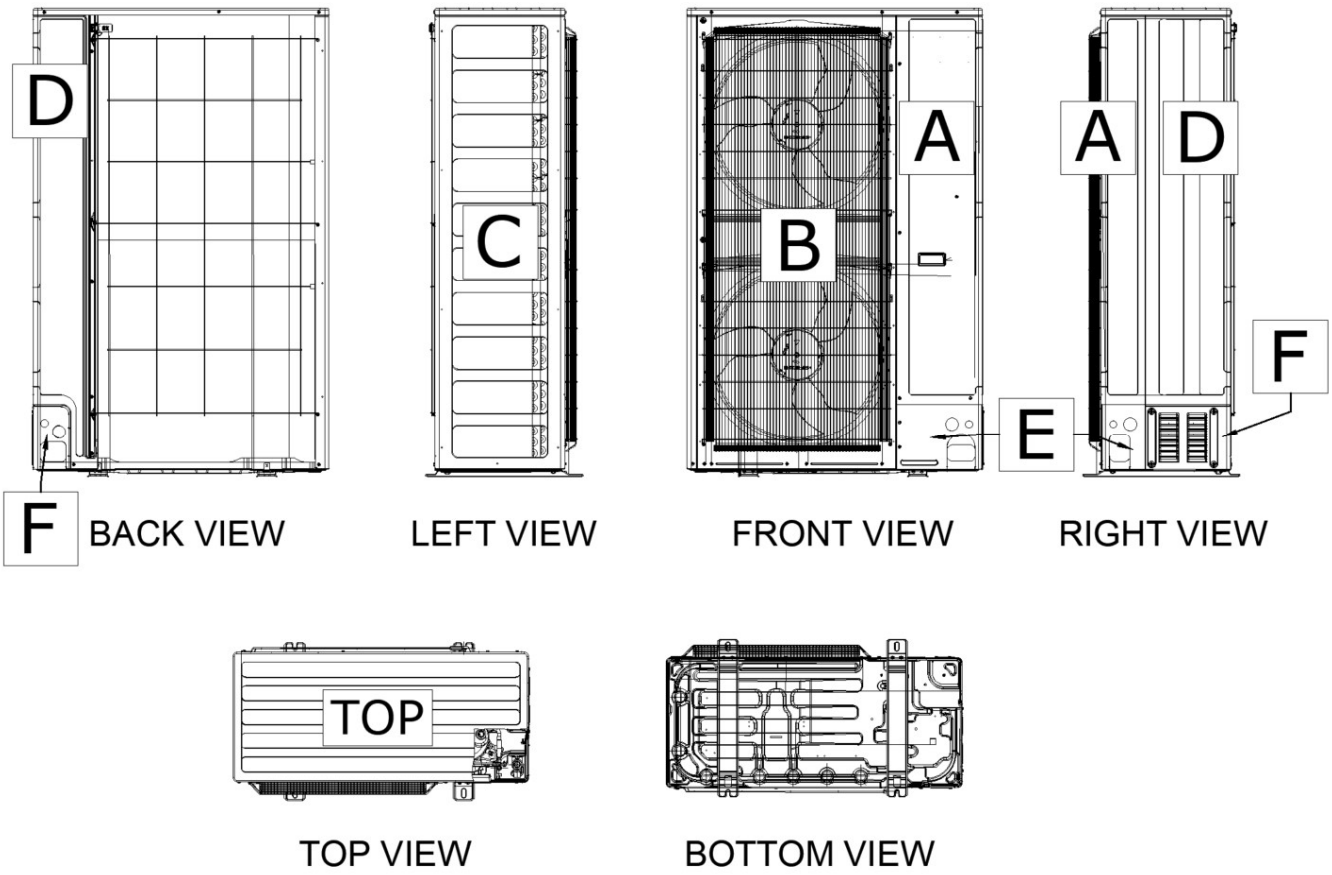

6 CABINET GROUP V
SCALE: NTS MULTIPLE VIEWS

CABINET GROUPS & PANEL DESIGNATIONS NOTES

Panel layouts for Cabinet Group V as designated by the boxed call-outs in Detail 5 (e.g. “A”, “B”, etc.) are as follows:

- The unit’s front is composed of three solid panels, designated “A”, “B”, and “E”. Panel “A” is defined as the front-left solid panel containing the fans. This panel bends around the front-left corner of the unit and extends slightly into the unit’s left side. The unit fans are protected by two fan cages (not designated above). Panel “B” is defined as the front upper-right solid panel with the handle. This panel bends around the unit front-right corner and extends halfway into the unit’s right side. Panel “E” is defined as the front lower-right solid panel, designated the “Front Piping Cover”, that bends around the unit front-right corner and extends into the unit’s right side.

- The unit’s right side is composed of three main panels, designated “A”, “D”, “E”, and “F”. Panel “A” is as described prior and covers the upper-left part of the unit’s right side. Panel “D” is the right side’s upper-right panel that covers most of the unit’s right side, bends around the right-back corner, and extends into part of the unit’s back side. Panel “E” is as described above and covers the unit’s lower right side. Panel “F” is defined as the lower-right solid panel on the the unit right side, designated the “Rear Piping Cover”, that bends around the right-back corner and extends into the unit’s back side.

- The unit’s left side is composed of a main panel “C”, which is mostly porous and exposes the coil/condenser assembly.

- The unit’s back side is covered mostly by a wire guard, exposing the coil/condenser assembly. Panels “C”, “D”, and “F” may wrap around the back left/right corners and extend slightly into the back side of the unit.

The roof of the unit is covered by the “TOP” panel, which covers all side wall panels and forms the roof of the unit.

Smaller cover panels, wire guard, and fan cages were considered in the Panel Integrity analysis summarized herein but may not be specifically designated above. Unit appearance may vary slightly. See the Panel Integrity section herein.

Copyright © Engineering Express® All Rights Reserved

TIE-DOWN SCHEDULE

Cabinet Group	Install. Condition	Max. ASD Wind Pressures Lateral (Uplift)	Anchor Schedule to Host Structure By Others			# of Tie-Down Clips Required	# of Tie-Down Straps Required	Min. WLL per Strap
			3000 psi min. Concrete Host	1/8" min. thick UTS = 58 ksi min. Steel Host	1/8" min. thick 6061-T6 Aluminum Host			
Groups I & II	At-Grade	± 43 psf (0 psf)	A or C	N/A	N/A	0	0	N/A
	At-Grade, Wall-Mount, or Rooftop	± 89 psf (70 psf)	N/A	B	B	0	2	500 lb
		± 106 psf (84 psf)	N/A	B	B	0	2	600 lb
		± 119 psf (94 psf)	N/A	B	B	0	2	700 lb
Group III	At-Grade	± 43 psf (0 psf)	C	N/A	N/A	0	0	N/A
	At-Grade, Wall-Mount, or Rooftop	± 89 psf (70 psf)	N/A	B	B	0	2	600 lb
		± 106 psf (84 psf)	N/A	B	B	0	2	800 lb
		± 119 psf (94 psf)	N/A	B	B	0	2	1000 lb
Group IV	At-Grade	± 24 psf (0 psf)	C	N/A	N/A	0	0	N/A
		± 43 psf (0 psf)	C	N/A	N/A	2	0	N/A
	At-Grade, Wall-Mount, or Rooftop	± 89 psf (70 psf)	N/A	B	B	0	2	1500 lb
		± 106 psf (84 psf)	N/A	B	B	0	2	2000 lb
		± 119 psf (94 psf)	N/A	B	B	0	2	2000 lb
Group V	At-Grade	± 32 psf (0 psf)	D	N/A	N/A	0	0	N/A
		± 47 psf (0 psf)	D & E	N/A	N/A	2	0	N/A
		± 54 psf (0 psf)	D & E	N/A	N/A	4	0	N/A
	At-Grade, Wall-Mount, or Rooftop	± 70 psf (56 psf)	N/A	B & F	B & F	2	4	535 lb*
		± 95 psf (75 psf)	N/A	B & F	B & F	4	4	535 lb*
		± 119 psf (94 psf)	N/A	B & F	B & F	4	6	535 lb*

TIE-DOWN SCHEDULE NOTES (Continued Next Page)

TIE-DOWN SCHEDULE DIRECTIVE:

The Tie-Down Schedule table above is divided into maximum wind pressure tiers (each row of table) for each Cabinet Group. Site-specific wind pressures up to the maximum pressures listed shall use, at-minimum, the tie-down specifications as stated by the corresponding pressure tier row. Site-specific wind pressures that fall in-between pressure tiers shall use, at-minimum, the tie-down specifications as specified by the higher pressure tier. Ensure the host structure by others meets the minimum specifications as stated in the Tie-Down Schedule table. This schedule applies to all units described in this evaluation. See tie-down specifications and Details herein. Contact Engineering Express for site scenarios outside the bounds of this evaluation.

Example 1: Say you are installing a Group I unit at an installation site with site-specific wind pressures of ± 37 psf lateral and 0 psf uplift. In this case, you would need to follow, at-minimum, the tie-down specifications corresponding to the ± 43 psf (0 psf) wind pressure tier row for Groups I & II. This row only permits anchoring to concrete host structures. If your host structure is aluminum or steel, you would need to use, at-minimum, the tie-down specifications corresponding to the ± 89 psf (70 psf) wind pressure tier row for Groups I & II.

Example 2: Say you are installing a Group III unit at an installation site with site-specific wind pressures of ± 96 psf lateral and 76 psf uplift. In this case, you would need to follow, at-minimum, the tie-down specifications corresponding to the ± 106 psf (84 psf) wind pressure tier row for Group III. This row permits aluminum and steel host structures only. Anchoring to a concrete host structure would not be permitted in this example.

REMAINDER OF PAGE INTENTIONALLY LEFT BLANK

Copyright © Engineering Express® All Rights Reserved

TIE-DOWN SCHEDULE NOTES (Continued From Previous Page)

ANCHOR SCHEDULE NOTES:

In all cases, host structure is by others. Anchor shall be selected per Cabinet Group, site-specific wind pressures, and host structure substrate. Utilize (1) anchor per unit integrated foot - (4) anchors per unit. Also utilize (1) anchor per tie-down clip (if applicable). Anchor specifications as represented in the Tie-Down Schedule are as follows:

A: Anchor Option to Concrete Hosts for Cabinet Groups I & II Unit Integrated Feet:

1/4" Ø DeWalt (formerly Elco) UltraCon SS4 anchor or equivalent with 1-3/4" embedment, 2-1/2" min. edge distance to any edge of concrete, and 4" min. spacing from neighboring concrete anchors typ. Provide (1) 1" min. OD fender washer sized for 1/4" Ø anchors under each anchor head.

B: Required Anchor to Aluminum/Steel Hosts for All Cabinet Groups' Unit Integrated Feet:

3/8" Ø, SAE Gr. 5 or stronger Thru-Bolt with 1" min. OD fender washers sized for 3/8" Ø bolts top and bottom and SAE Gr. 5 or stronger locking nut sized for 3/8" Ø bolts, typ. Provide 1" min. edge distance to any edge of host structure and 1" min. spacing from neighboring Thru-Bolts, typ.

C: Anchor Option to Concrete Hosts for Cabinet Groups I & II Unit Integrated Feet:
Required Anchor to Concrete Hosts for Cabinet Groups III & IV Unit Integrated Feet:

1/4" Ø DeWalt (formerly Stanley/Powers) Wedge Bolt or equivalent with 2" min. embedment, 2" min. edge distance to any edge of concrete, and 4" min. spacing from neighboring concrete anchors typ. Provide (1) 1" min. OD fender washer sized for 1/4" Ø anchors under each anchor head.

D: Required Anchor to Concrete Hosts for Cabinet Groups V Unit Integrated Feet:

3/8" Ø ITW Red Head Large Diameter Tapcon (LDT) anchor or equivalent with 3-1/2" embedment, 3" min. edge distance to any edge of concrete, and 6" min. spacing from neighboring concrete anchors typ. Provide (1) 1" min. OD fender washer sized for 3/8" Ø anchors under each anchor head.

Note: For scenarios in which tie-down clips are to be positioned close to the unit integrated feet, it is permitted for the concrete anchor spacing to be reduced to 3" minimum, typ.

E: Required Anchor to Concrete Hosts for Cabinet Groups V Tie-Down Clips:

1/4" Ø ITW Red Head Tapcon anchor or equivalent with 1-3/4" embedment, 3" min. edge distance to any edge of concrete, and 3" min. spacing from neighboring concrete anchors typ. Provide (1) 1" min. OD fender washer sized for 1/4" Ø anchors under each anchor head.

F: Required Anchor to Aluminum/Steel Hosts for All Cabinet Groups' Tie-Down Clips (if applicable):

1/4" Ø, SAE Gr. 5 or stronger Thru-Bolt with 1" min. OD fender washers sized for 1/4" Ø bolts top and bottom and SAE Gr. 5 or stronger locking nut sized for 1/4" Ø bolts, typ. Provide 1" min. edge distance to any edge of host structure and 1" min. spacing from neighboring Thru-Bolts, typ.

N/A: Not applicable.

TIE-DOWN CLIP NOTES (Continued Next Page):

No tie-down clips are required for Cabinet Group I - III units.
For Group IV units, tie-down clips are required only for at-grade installations to concrete host structures greater than ± 23 psf lateral & 0 psf uplift wind pressures, and up to ± 43 psf lateral & 0 psf uplift wind pressures.
For Group V units, tie-down clips are required for at-grade installations to concrete host structures greater than ± 32 psf lateral & 0 psf uplift wind pressures, and up to ± 54 psf lateral & 0 psf uplift wind pressures. Tie-down clips are also required for all installations to aluminum/steel host structures.

Tie-down clips shall be 1" min. wide, 4"-12" tall, 0.068" min. thick, UTS = 45 ksi min. (equiv. to ASTM A653 Gr. 33 or stronger) galv. steel.
Note: Miami-Tech steel 1" wide CUTD clips have been reviewed by Engineering Express and are pre-approved to meet the aforementioned clip specifications.

Fasten clip to host structure with (1) anchor per tie-down clip according to the "Anchor Schedule to Host Structure" specifications stated herein. Ensure anchor is placed at center of tie-down clip leg to provide 1/2" min. edge distance, typ. Fasten clip to unit base rail with (4)* #8 (0.164") min. Ø , SAE Gr. 2 min. or SS self-drilling screws, typ. Utilize (4)* slots that have flush, solid contact with unit, (1) screw per slot, typ. (*Note: For Cabinet Group V units, employ (6) screws per tie-down clip instead of (4) screws, (1) screw per slot, typ). Care must be taken to avoid screw contact with internal piping and components. Exercise caution with screw installation. Ensure all screws fully engage with unit. Tie-down clips shall sit flush on host structure and flush against unit.

CONTINUED NEXT PAGE

Copyright © Engineering Express® All Rights Reserved

TIE-DOWN SCHEDULE NOTES (Continued from Previous Page)

TIE-DOWN CLIP NOTES (Continued from Previous Page):

Position tie-down clips per the following directives:

- For scenarios in which (2) tie-down clips are required: Position (1) clip at either long side (front and back) of the unit, typ.*
  *Note: For tie-down clips to concrete hosts, it is permitted for tie-down clips to be installed on corners of unit short sides instead of unit long sides in order to provide the required minimum anchor spacing. Ensure all other specifications listed herein are achieved.

- For scenarios in which (4) tie-down clips are required: Position (1) clip at either long side (front and back) of the unit, and (1) clip at either short side (left and right) of the unit, typ.*

  To accommodate tie-down clip placement on the short sides of the unit for installations to aluminum and steel host structures, orient the unit such that the unit long sides are parallel to the direction of the host members (i.e. stand rails or wall brackets). Provide (2) support angles per the following specifications:

  Support angles shall be L-angle(s) with the following specifications: 3" min. wide legs x 1/8" min. thick, 6061-T6 aluminum. Support angle length may vary so long as the following support angle attachment conditions are achieved. Attach angle to host member with (1) 3/8" Ø, SAE Gr. 5 or stronger Thru-Bolt per crossing, (2) per angle. Provide 1" min. OD fender washers sized for 3/8" Ø bolts top and bottom, typ. Provide 1" min. edge distance to any edge of members in contact (support angle and host structure member). See Tie-Down Details herein.

TIE-DOWN STRAP NOTES:

No tie-down straps are required for at-grade installations.

- For Cabinet Group I - IV installations that require tie-down straps:

  Strap material shall be high strength webbing and shall be compliant for exterior grade use if they contain plastic components in accordance with FBCB Chapter 26. Working load limit (WLL) is per strap's manufacturer, specified per strap. If the strap is rated to a capacity or breaking strength instead of WLL, the capacity or breaking strength shall be divided by the strap manufacturer's specified safety factor to obtain an equivalent WLL that complies with the parameters above. Select strap from the Tie-Down Schedule based on the minimum WLL requirements.

- For Cabinet Group V installations that require tie-down straps:

  Tie-down straps shall be 1" min. wide x 20 GA (.036") min. thick, UTS = 45 ksi min. (equiv. to ASTM A653 Gr. 33 or stronger) galv. steel. Wrap each tie-down strap over the long sides and top of the unit and attach each strap end to the aluminum or steel host structure members (i.e. wall brackets or roof stand rails). (See Tie-Down Details herein). Position tie-down straps 3" minimum away from the unit short side edges and provide 1/2" min. spacing between edges of adjacent straps, typ.

  Attach each strap end to the host structure member with (4) #8, SAE Gr. 2 min. or SS SMS with 1/2" min. spacing between screws and 1/4" min. edge distance to any edge of strap and host structure member, typ. It is suggested that the straps attach to the undersides of the host structure members, but the straps are permitted to attach to any horizontal or vertical face of the host structure so long as all conditions stated herein are achieved. See the Tie-Down Details herein

  Strap shall be held in place by installing (2) #12, SAE Gr. 2 min. or SS SMS through the strap and into the roof panel of the unit, typ. Provide 6" min. spacing between screws and position 3" min. inwards from long side ends of unit and O.C. of strap, typ. See the Tie-Down Details herein.

  *Note: Min. WLL per strap values listed with an asterisk (*) are the calculated allowable working load capacities per tie-down strap as determined by Engineering Express. Straps satisfying the above-stated requirements are considered to have this minimum allowable working load capacity.

- For all tie-down straps:

  Tie-down strap lengths shall be determined by the installing contractor and verified on-site for all units. Straps shall be wrapped around the unit and host structure member and shall be tightened to a snug fit. Neoprene pads may be placed between the unit and strap to protect the unit from damage/distortion. Tie-down straps may be removed for maintenance purposes but shall be replaced following maintenance. **Tie-down straps must be in place before any named storm or similar high-wind event.**

REMAINDER OF PAGE INTENTIONALLY LEFT BLANK

Copyright © Engineering Express® All Rights Reserved

TIE-DOWN DETAILS: (CABINET GROUPS I – IV)

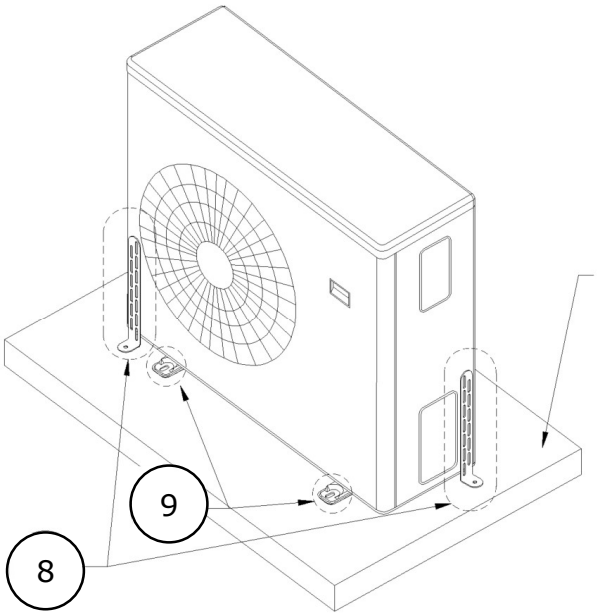

SAMPLE AT-GRADE INSTALLATION, TYP.
7
SCALE: NTS ISOMETRIC VIEW

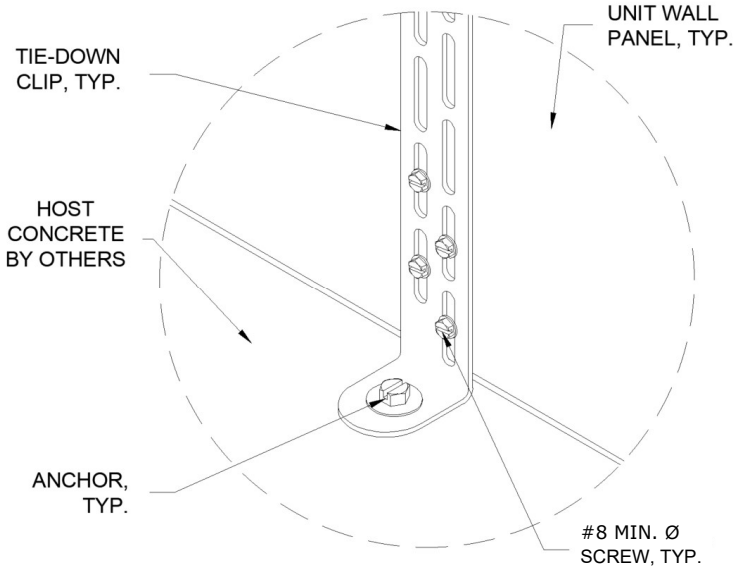

TIE-DOWN CLIP ATTACHMENT, TYP.
8
SCALE: NTS ISOMETRIC VIEW

(If applicable - tie-down clips are required for certain Cabinet Group IV unit at-grade installations – see Schedule).

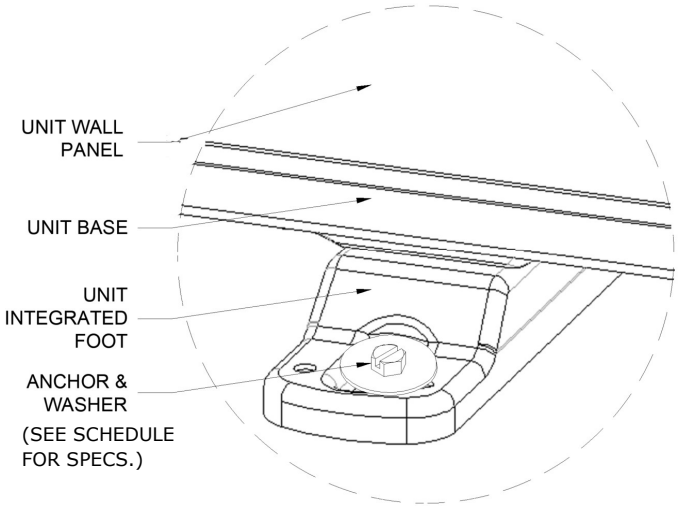

UNIT INTEGRATED FOOT ATTACHMENT, TYP.
9
SCALE: NTS ISOMETRIC VIEW

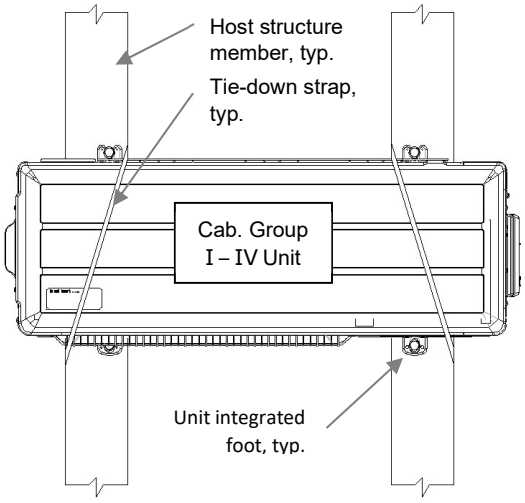

SAMPLE WALL/ROOF INSTALLATION, TYP.
10
SCALE: NTS ISOMETRIC VIEW

TIE-DOWN DETAILS: (CABINET GROUPS I – IV) NOTES

For each Detail in this section, consult Tie-Down Schedule and Notes herein for all tie-down components & specifications required.

The units depicted in the Details on this page are for illustrative purposes only. Units may vary in appearance. Tie-down system may not be depicted in full. Sample tie-down layout shown in Details 7 and 10 are for illustrative purposes only. Tie-down locations may vary per the specifications of the Tie-Down Schedule and Notes herein.

Note: For Detail 7, the tie-down clip illustrated on the front long side may need to be positioned elsewhere to achieve the minimum anchor spacing requirements; tie-down clip is shown in this location to include (2) tie-down clips in the same illustration.

Copyright © Engineering Express® All Rights Reserved

CABINET GROUP V: UNIT INTEGRATED FEET

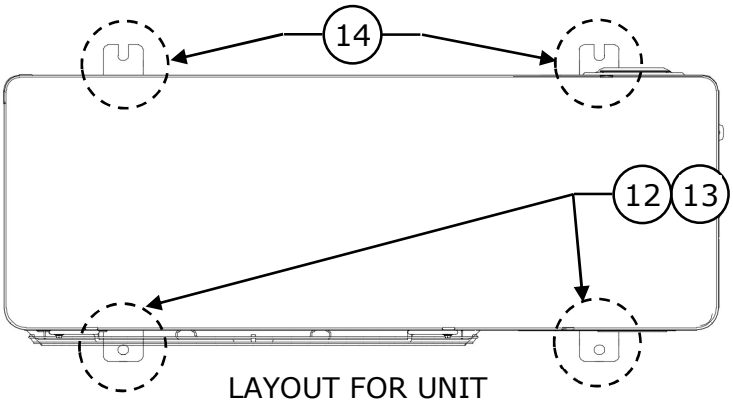

11 LAYOUT FOR UNIT INTEGRATED FEET
SCALE: NTS TOP VIEW

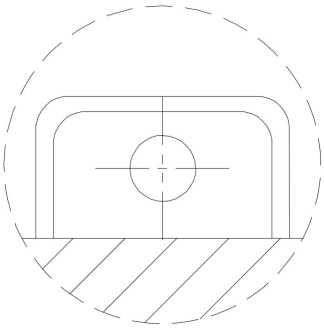

12 UNIT INTEGRATED FOOT, NO SLOT
SCALE: NTS TOP VIEW

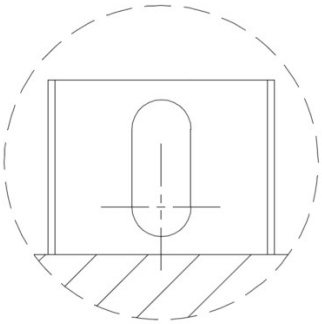

13 UNIT INTEGRATED FOOT, CLOSED SLOT
SCALE: NTS TOP VIEW

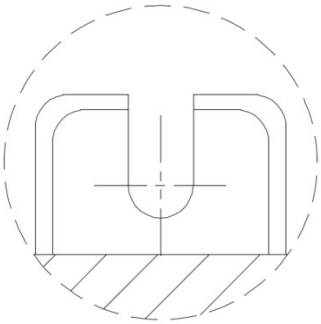

14 UNIT INTEGRATED FOOT, OPEN SLOT
SCALE: NTS TOP VIEW

CABINET GROUP V: UNIT INTEGRATED FEET NOTES

Fasten unit to host structure using anchors per the Tie-Down Schedule and Notes section herein. Position anchors at crosshairs shown in Details 12 - 14, typ. Details 11 - 14 are for illustrative purposes only. Unit and integrated feet may vary in appearance. All units were considered to have (2) unit integrated feet with open slots per Detail 14, and (2) fully enclosed feet, as shown in Details 12 & 13. A reverse configuration to that shown in Detail 11 is also permitted, with open-slotted feet at the unit front side and fully enclosed feet at the unit back side. It is also permitted for units to have (4) fully enclosed feet with no open slots, per Details 12 & 13.

REMAINDER OF PAGE INTENTIONALLY LEFT BLANK

Copyright © Engineering Express® All Rights Reserved

TIE-DOWN DETAILS: (CABINET GROUP V) (Continued Next Page)

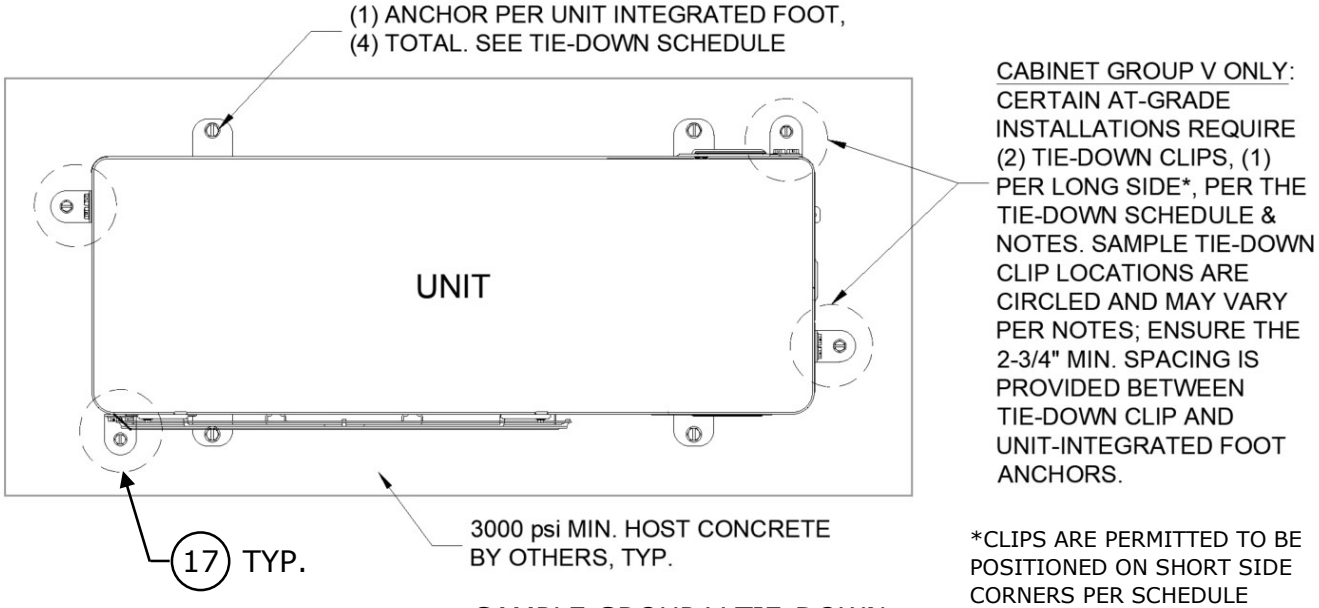

15 SAMPLE GROUP V TIE-DOWN LAYOUT TO CONCRETE
SCALE: NTS PLAN VIEW

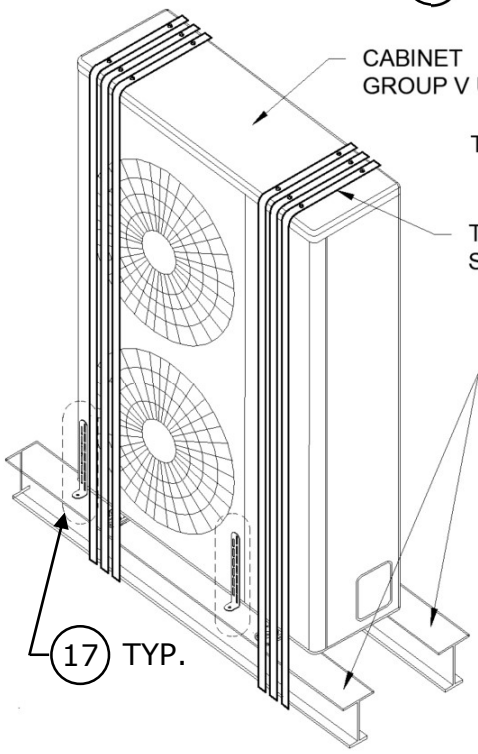

16 SAMPLE GROUP V TIE-DOWN TO ALUM/STEEL HOST
SCALE: NTS ISOMETRIC VIEW

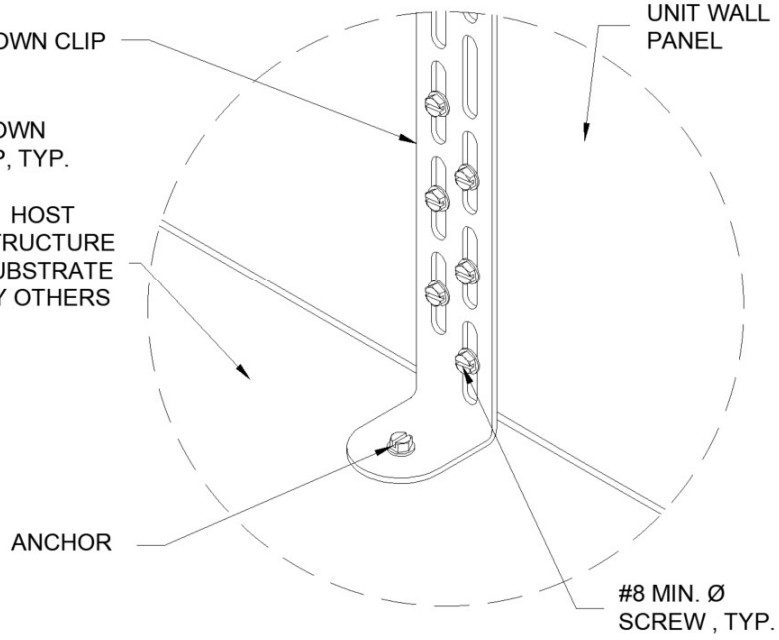

17 GROUP V TIE-DOWN CLIP ATTACHMENT, TYP.
SCALE: NTS ISOMETRIC VIEW

TIE-DOWN DETAILS: (CABINET GROUP V) NOTES

For each Detail in this section, consult Tie-Down Schedule and Notes herein for all tie-down components & specifications required.

The units depicted in the Details on this page are for illustrative purposes only. Units may vary in appearance. Host structure shape may vary. Tie-down system may not be depicted in full. Sample tie-down layouts shown herein are for illustrative purposes only. Tie-down locations may vary per the specifications of the Tie-Down Schedule and Notes herein.

Copyright © Engineering Express® All Rights Reserved

TIE-DOWN DETAILS: (CABINET GROUP V) (Continued On Previous/Following Pages)

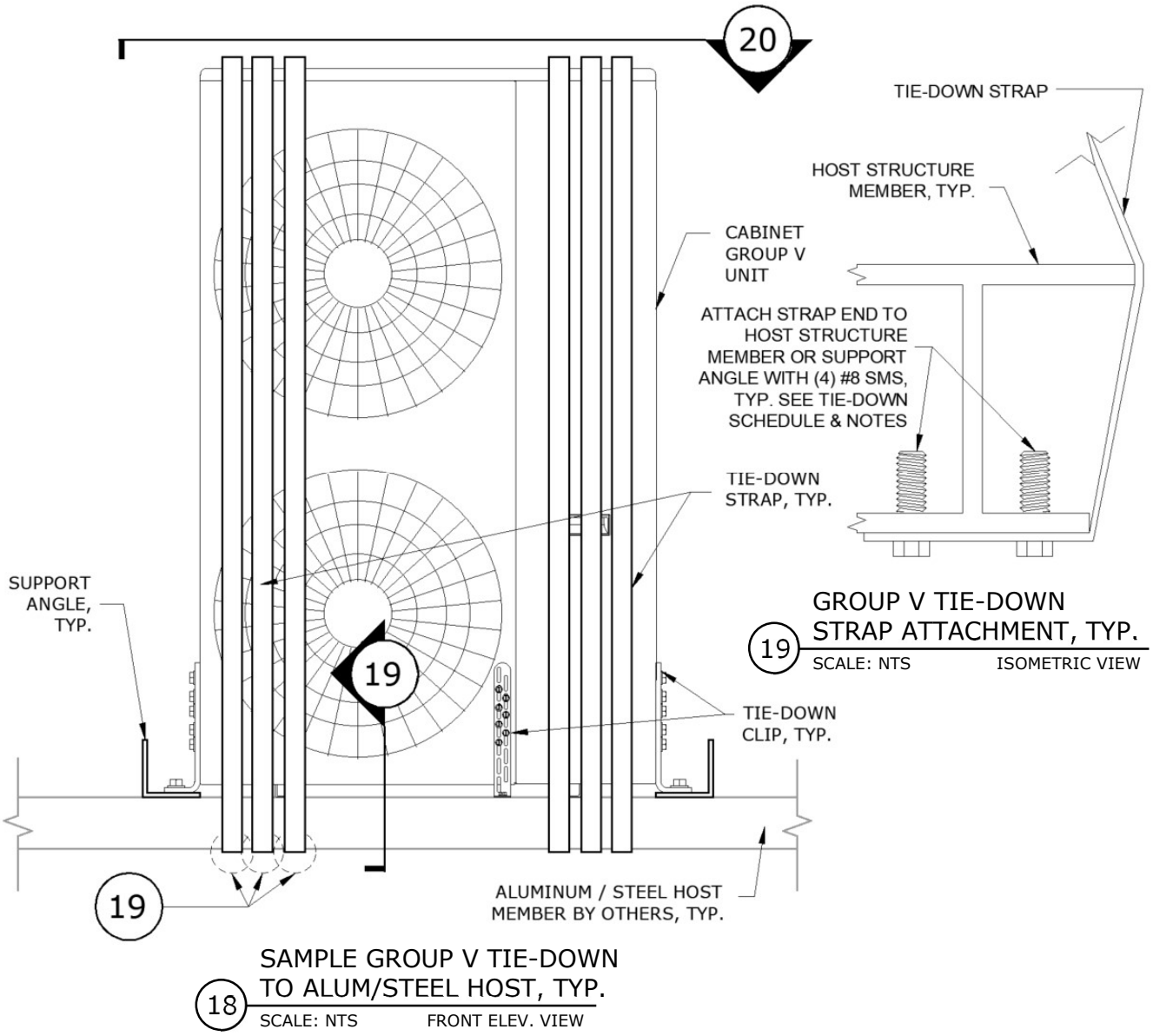

GROUP V TIE-DOWN STRAP ATTACHMENT, TYP.
19 SCALE: NTS ISOMETRIC VIEW

SAMPLE GROUP V TIE-DOWN TO ALUM/STEEL HOST, TYP.
18 SCALE: NTS FRONT ELEV. VIEW

TIE-DOWN DETAILS: (CABINET GROUP V) NOTES

For each Detail in this section, consult Tie-Down Schedule and Notes herein for all tie-down components & specifications required.

The units depicted in the Details on this page are for illustrative purposes only. Units may vary in appearance. Host structure shape may vary. Tie-down system may not be depicted in full. Sample tie-down layouts shown herein are for illustrative purposes only. Tie-down locations may vary per the specifications of the Tie-Down Schedule and Notes herein.

REMAINDER OF PAGE INTENTIONALLY LEFT BLANK

Copyright © Engineering Express® All Rights Reserved

TIE-DOWN DETAILS: (CABINET GROUP V) (Continued On Previous/Following Pages)

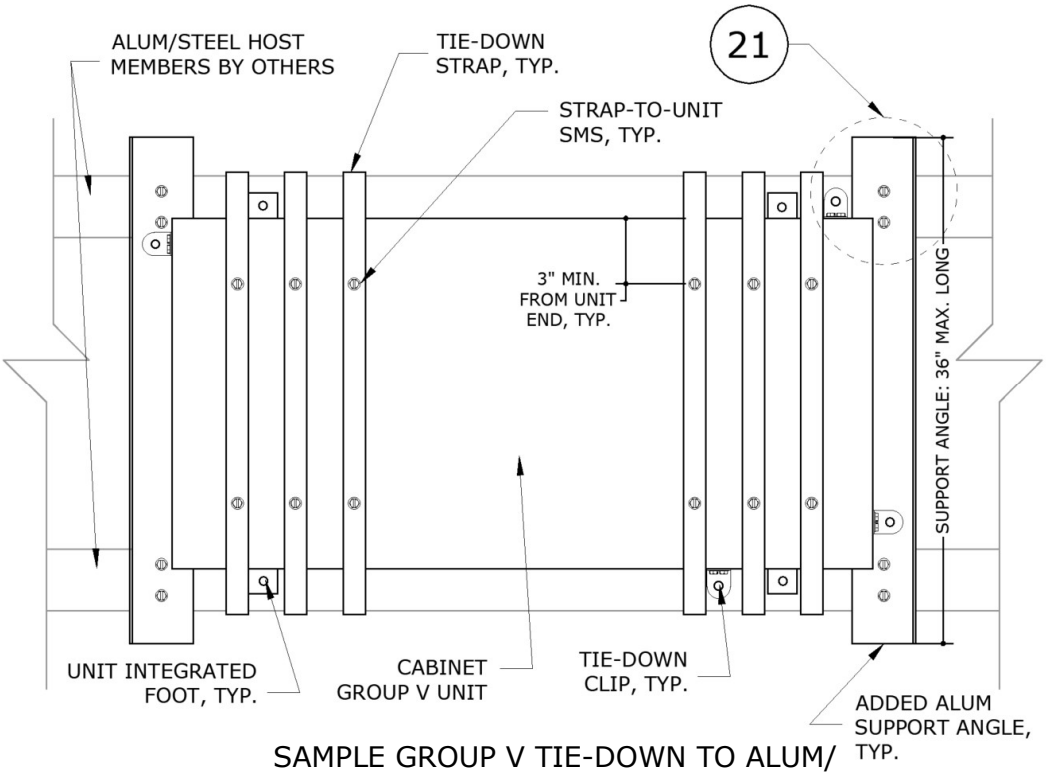

SAMPLE GROUP V TIE-DOWN TO ALUM/ STEEL HOST W/ SUPPORT ANGLES

20 SCALE: NTS PLAN (TOP) VIEW

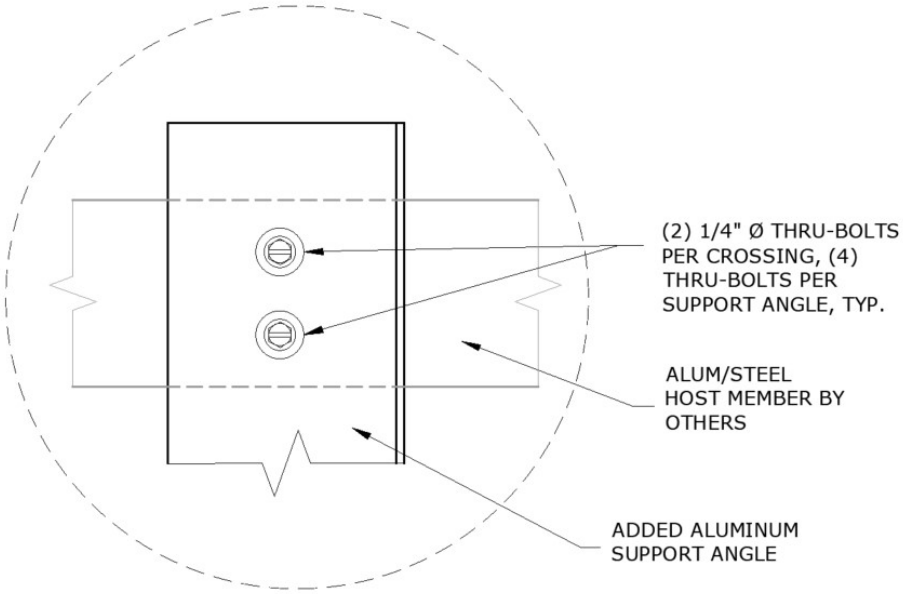

SUPPORT ANGLE ATTACHMENT TO ALUM/STEEL HOST MEMBER, TYP.

21 SCALE: NTS PLAN (TOP) VIEW

TIE-DOWN DETAILS: (CABINET GROUP V) NOTES

For each Detail in this section, consult Tie-Down Schedule and Notes herein for all tie-down components & specifications required.

The units depicted in the Details on this page are for illustrative purposes only. Units may vary in appearance. Host structure shape may vary. Tie-down system may not be depicted in full. Sample tie-down layouts shown herein are for illustrative purposes only. Tie-down locations may vary per the specifications of the Tie-Down Schedule and Notes herein.

Copyright © Engineering Express® All Rights Reserved

PANEL INTEGRITY SUMMARY: CABINET GROUPS I – IV

No additional screws are required for Cabinet Groups I, II, and III for wind pressures up to ± 118 psf lateral & 94 psf uplift.

No additional screws are required for Cabinet Group IV for wind pressures up to ± 43 psf lateral & 0 psf uplift.

For Cabinet Group IV with site-specific pressures greater than ± 43 psf lateral & 0 psf uplift, follow the directives and specifications as noted in the Panel Integrity Summary Tables and Notes below:

Up to ± 89 psf Lateral & 74 psf Uplift Wind Pressures		
Panel Designation	**Additional Screws Required**	**Additional Screws Directive**
Panel A	1	Install (1) addtl. screw into bottom of panel to join with unit base.
Panel B	1	Install (1) addtl. screw into bottom of panel to join with unit base.
(2) Addtl. Screws Required in Total per Cabinet Group IV Unit. Additional screws shall be #8 min. Ø, SAE 1016 or stronger SMS. See notes below for addtl. specifications.		

Up to ± 119 psf Lateral & 94 psf Uplift Wind Pressures		
Panel Designation	**Additional Screws Required**	**Additional Screws Directive**
Panel A	2	Install (2) addtl. screws into bottom of panel to join with unit base.
Panel B	2	Install (2) addtl. screws into bottom of panel to join with unit base.
(4) Addtl. Screws Required in Total per Cabinet Group IV Unit. Additional screws shall be #8 min. Ø, SAE 1016 or stronger SMS. See notes below for addtl. specifications.		

Panel Integrity Summary Note: Wind Pressures listed are allowable (ASD) Wind Pressures.

PANEL INTEGRITY SUMMARY: CABINET GROUPS I – IV NOTES

Panel integrity calculations were based on information provided by the client and manufacturer-listed specifications. Specifications herein apply to all unit models listed herein (see "Model Information" on page 2). All exterior panels were considered in the calculations and are covered by this certification. Panels were assigned various porosities depending on the ratio of louver/aperture area to total panel area, for the purposes of calculating the acting wind force on each panel. Screw sizes, quantities on panels, and panel characteristics were considered based on client-provided information and additional conservative assumptions. Screw quantities were checked to reinforce unit panels as needed.

"Additional screws" are screws that are required to be installed ***in addition to*** the existing screws present as part of the original unit design(s) submitted to this office, unless noted otherwise (U.N.O.). The purpose of additional screws is to ensure panel connection integrity, referred to herein as "panel integrity", is sufficiently validated, such that the panel in question can withstand a high-speed wind gust and not detach or otherwise become flying debris.

1000 hours of ASTM B117 with zero red rust is required for all additional screws. Position additional screw(s) as directed by the respective "Additional Screws Directive" specifications for the panel in question. Provide 1" min. spacing between neighboring screws (existing or additional). Validate that each additional screw joins the panel in question to the other specified member (as specified in the "Additional Screws Directive" where applicable).

REMAINDER OF PAGE INTENTIONALLY LEFT BLANK

Copyright © Engineering Express® All Rights Reserved

PANEL INTEGRITY SUMMARY: CABINET GROUP V

No additional screws are required for Cabinet Group V for wind pressures up to ± 72 psf lateral & 57 psf uplift.

For Cabinet Group V with site-specific pressures greater than ± 72 psf lateral & 57 psf uplift, follow the directives and specifications as noted in the Panel Integrity Summary Tables and Notes below:

Up to ± 95 psf Lateral & 75 psf Uplift Wind Pressures		
Panel Designations	**Addtl. Screws Required**	**Additional Screws Directive**
Panel A (Front Side Upper-Right Wall Panel)	1	Install (1) addtl. screw(s) at left side of panel to join with the main body of the unit.
Panel B (Front Side Left Wall Panel w/ Fans)	3	Install (2) addtl. screw(s) at bottom of panel to join with the unit base. Install (1) addtl. screw(s) at top of panel to join with the top roof panel.
(4) Additional Screw Required in Total per Cab. Group V Unit. Addtl. screws shall be #12 min. Ø, SAE Gr. 2 min. or SS SMS. See notes below for further specifications.		

Up to ± 119 psf Lateral & 94 psf Uplift Wind Pressures		
Panel Designations	**Addtl. Screws Required**	**Additional Screws Directive**
Panel A (Front Side Upper-Right Wall Panel)	2	Install (2) addtl. screw(s) at left side of panel to join with the main body of the unit.
Panel B (Front Side Left Wall Panel w/ Fans)	6	Install (2) addtl. screw(s) at bottom of panel to join with the unit base. Install (4) addtl. screw(s) at top of panel to join with the top roof panel.
Panel E (Front Piping Cover)	1	Install (1) addtl. screw(s) at the left side of the panel to join with the main body of the unit.
(9) Additional Screw Required in Total per Cab. Group V Unit. Addtl. screws shall be #12 min. Ø, SAE Gr. 2 min. or SS SMS. See notes below for further specifications.		

Panel Integrity Summary Note: Wind Pressures listed are Allowable (ASD) Wind Pressures.

PANEL INTEGRITY SUMMARY: CAB. GROUP V NOTES

Panel integrity calculations were based on information provided by the client and manufacturer-listed specifications. Calculations are valid for all Cabinet Group V unit models listed herein, and specifications herein apply to all Cabinet Group V unit models listed herein (see “Model Information” on page 2). Panel integrity calculations were based on information provided by the client and manufacturer-listed specifications. Calculations are valid for all Cabinet Group V unit models listed herein, and specifications herein apply to all Cabinet Group V unit models listed herein (see “Model Information” on page 2). All exterior panels were considered in the calculations and are covered by this certification. Panels were assigned various porosities depending on the ratio of louver/aperture area to total panel area, for the purposes of calculating the acting wind force on each panel. Screw sizes, quantities on panels, and panel characteristics were considered based on client-provided information and additional conservative assumptions. Screw quantities were checked to reinforce unit panels as needed. (See previous page for explanation and purpose of “additional screws”, typ).

Additional screw(s) shall be #12 minimum diameter, SAE Gr. 2 min. or SS SMS. 1000 hours of ASTM B117 with zero red rust is required for all additional screws. Position additional screw(s) as directed by the respective “Additional Screws Directive” specifications for the panel in question. Provide 1” min. spacing between neighboring screws (existing or additional). Validate that each additional screw joins the panel in question to the other specified member (as specified in the “Additional Screws Directive” where applicable). See diamond “◇” regions in the Detail below for approximate screw locations.

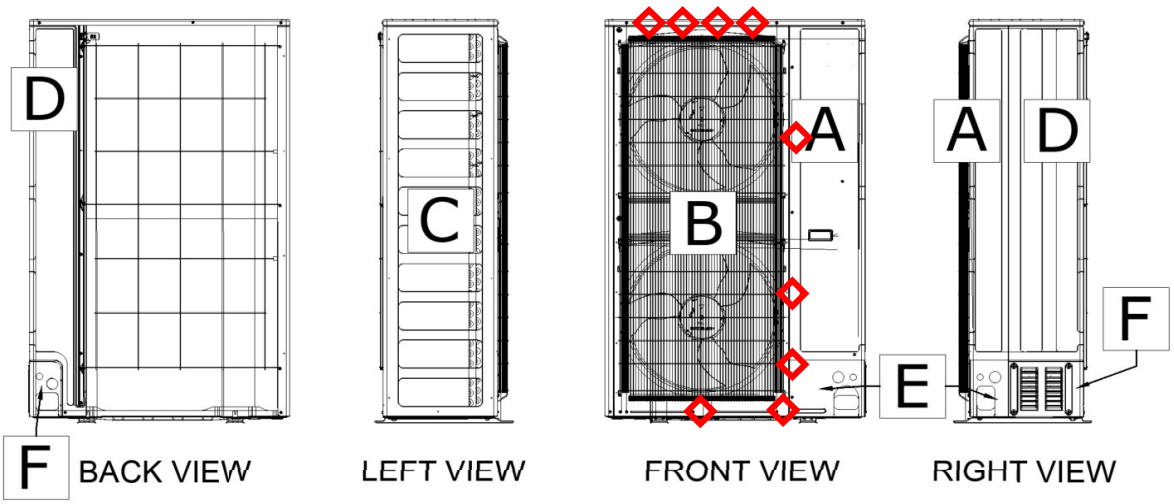

22 SAMPLE ADDITIONAL SCREW LOCATIONS, TYP.
SCALE: NTS MULTIPLE VIEWS

Copyright © Engineering Express® All Rights Reserved

TERMINOLOGY

The following abbreviations may appear in this report: "Addtl." for "additional", "AHJ" for "Authority Having Jurisdiction", "alum" for "aluminum", "ASCE" for "American Society of Civil Engineers", "ASD" for "Allowable Stress Design", "ASTM" for "American Society for Testing and Materials", "EA." for "each", "E.D." for edge distance", "EDDS" for "extra deep drawing steel", "e.g." for "*exempli gratia*" or "for example", "equiv." for "equivalent", "FBC" for "Florida Building Code", "FEA" for "Finite Element Analysis", "FLCA" for "Florida Certificate of Authorization", "FS" for "Florida Statutes", "Fu" for "ultimate tensile strength" or "ultimate tensile stress", "Fy" for "yield strength" or "yield stress" "GA" for "gauge", "GR." or "Gr." for "grade", "HVAC" for "heating, ventilation, and air conditioning", "HVHZ" for "High-Velocity Hurricane Zone", "i.e. " for "*id est*" or "in other words", "in" for "inch", "lb" for "pound (force)", "max." for "maximum", "min." for "minimum", "mm" for "millimeter", "NTS" for "not to scale", "O.C. " for "on center", "OD" for "outer diameter", "pcf" for "pounds (force) per cubic foot", "PE" for "Professional Engineer", "qty" for "quantity", "SAE" for "Society of Automotive Engineering", "SMS" for "sheet metal screws", "SS" for "stainless steel", "TER" for "Technical Evaluation Report", "typ." for "typical", "ult" for "ultimate loads", "U.N.O." for "unless noted otherwise", "UTS" for "ultimate tensile strength" or "ultimate tensile stress", "WLL" for "working load limit", "w/o" for "without", "YS" for "yield strength" or "yield stress", "#" for "number", "&" for "and", and "Ø" for "diameter". Please visit ecalc.io/glossary for additional abbreviation clarifications.

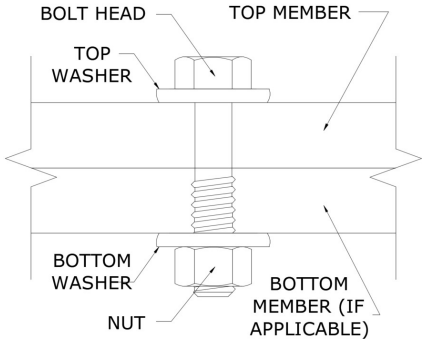

SAMPLE THRU-BOLT

SCALE: NTS SECTION VIEW

Note: The term "Thru-Bolt" or through bolt, if used herein, refers to a bolt passing through the member(s) in contact and is fastened by a nut at the end opposite the screw head. Nut shall be equivalent to or exceed the strength of the bolt U.N.O. Nut shall be sized to accommodate the same nominal diameter as the bolt U.N.O. See diagram above-right for a sample thru-bolt configuration.

Note: For instances herein which list material specifications as *"[material type] or stronger":*
U.N.O. herein, the term "stronger" refers to a material with a UTS value equal to or greater than the UTS value of the stated material type. Consult appropriate literature for established material UTS values.

Note: Equivalent steel gauge thicknesses as used in this evaluation, U.N.O., are as follows:
22 GA (.030"), 20 GA (.036"), 18 GA (.048"), 16 GA (.060"), 14 GA (.075"), 12 GA (.098").

LIMITATIONS & CONDITIONS OF USE, CONTINUED

Use of this product shall be in strict accordance with this TER as noted herein. The supporting host structure shall be designed to resist all superimposed loads as determined by others on a site-specific basis as may be required by the authority having jurisdiction. Host structure conditions that are not accounted for in this product's respective anchor schedule shall be designed for on a site-specific basis by a registered Professional Engineer. No evaluation is offered for the host supporting structure by use of this document. Adjustment factors noted herein and the applicable building codes must be considered, where applicable. Product components shall be of the material(s) specified in the manufacturer-provided product specifications. All supporting components which are permanently installed shall be protected against corrosion, contamination, and other such damage at all times. All fasteners and anchors shall be installed in accordance with the applicable provisions specified herein in addition to the anchor/fastener manufacturers' published installation instructions. Fasteners must penetrate the supporting members such that the full length of the threaded portion is embedded within the main member.

All of the wind-resisting exterior panels (with accompanying retrofits) individually meet or exceed their capacity to resist the design wind loads as stated in the calculations as required by the codes and standards stated herein. Due to the indeterminate nature of these units, distortion, deflection, and material deformation cannot be accurately evaluated, but with the diaphragm action of external components and internal stiffeners, the base unit (with accompanying retrofits stated herein as applicable) has the capacity to withstand the design wind loads without detaching from the unit and becoming flying debris.

Survivability: Evaluation reports are valid for a newly installed unit and do not include certification of the product beyond a design event or if impacted by any debris. Inspections shall be implemented annually by the end user and after every named storm. All fasteners and cabinet components are to be verified, and all damaged, loose, corroded and/or broken fasteners and cabinet components shall be replaced to ensure structural integrity against hurricane wind forces. Contact this office for any reevaluation needs or as designated by the Authority Having Jurisdiction.

Durability: Components or component assemblies shall not deteriorate, crack, fail, or lose functionality due to galvanic corrosion or weathering. All supporting components which are permanently installed shall be protected against corrosion, contamination, and other such damage at all times. Each component or component assembly shall be supported and oriented in its intended installation position. All exposed plastic components shall be certified to resist sunlight exposure as specified by ASTM B117, or ASTM G155 in Broward or Miami-Dade counties.

Extent of Certification: Certification pertains to the overall structural integrity of the unit components listed within the evaluation as required by code, subject to the limitations and criteria stated herein. Operability during or after a design event is not included in this certification. Water infiltration is outside the bounds of this certification. No other certifications are intended other than as described herein. This evaluation alone does not offer any evaluation for large missile impact debris or cyclic wind requirements unless specifically stated herein.

Proj. #	Remarks	By	Checked	Date	Proj. #	Remarks	By	Checked	Date
17.5131.5	Initial Issue	LAO	FLB	7/30/19	20-34994	Update/Add Model Numbers	EPR	RWN	04/01/22
20-34994	2020 FBC	CCB	RWN	1/25/21	20-34994	Update/Add Model Numbers	EPR	EPR	03/27/23
20-34994	Update Model Numbers	EPR	EPR	7/13/21	23-68094	2023 FBC Update	MRT	RWN	01/23/24

Copyright © Engineering Express® All Rights Reserved

APPENDIX A: DESIGN WIND PRESSURE GUIDE

Max. Ult. Wind Speed (V_{ult})	Max. MRH (Roof Height)	Exposure Category	Required Design Wind Pressures (ASD)	
			Lateral Pressure	Uplift Pressure
140 mph	At-Grade (0 ft)	C	± 26 psf	0* psf
		D	± 31 psf	0* psf
	100 ft	C	± 63 psf	50 psf
		D	± 71 psf	56 psf
	200 ft	C	± 72 psf	57 psf
		D	± 80 psf	63 psf
175 mph	At-Grade (0 ft)	C	± 40 psf	0* psf
		D	± 49 psf	0* psf
	100 ft	C	± 98 psf	77 psf
		D	± 111 psf	87 psf
	200 ft	C	± 113 psf	89 psf
		~~D~~	~~± 124 psf~~	~~98 psf~~
186 mph	At-Grade (0 ft)	C	± 46 psf	0* psf
		D	± 54 psf	0* psf
	100 ft	C	± 111 psf	87 psf
		~~D~~	~~± 125 psf~~	~~99 psf~~
	~~200 ft~~	~~C~~	~~± 127 psf~~	~~100 psf~~
		~~D~~	~~± 140 psf~~	~~111 psf~~

~~100 psf~~ Note: Any table values with the format shown left, if present, indicate design wind pressures and site conditions that are **not approved for use** by this evaluation. Seek additional engineering or contact this firm for design solutions.

DIRECTIVE: This design pressure guide is for reference only and shall be approved for use by the Authority Having Jurisdiction (AHJ). If the design pressures listed in this guide are not used, required design pressures shall be calculated separately. For site-specific scenarios classified as Exposure Category B, the required design pressures stated for Exposure Category C in the above guide shall be used or design pressures shall be calculated separately. For heights and parameters beyond the parameters listed in this guide, visit our Online Calculator via the website link (https://ecalc.io/forces) or QR Code below, or obtain calculations separately by others.

The required ASD design pressures listed in this guide were calculated per the table's listed corresponding site conditions. The project design professional or permitting contractor shall verify that the site-specific conditions are equal to or less than the approved design parameters listed in the guide. Per the note below table: any values shown as "~~XX psf~~", indicate wind pressures and corresponding site conditions that are **not valid for use** with this evaluation (exceeds the max. rated pressures).

*Note: Per the codes and standards referenced herein, uplift is not required for mechanical equipment at-grade. If uplift at-grade is required by the AHJ, contact this firm for a site-specific evaluation.

At-Grade (0 ft MRH) Required Design Pressures:

- ASCE 7 "Design Wind Loads: Other Structures"
- Structure Shape = Square, flat terrain
- Height of structure (unit + stand or curb, if used) = 6 ft max.
- Width of unit = 1 ft min., Depth of unit = 11 in min.

Rooftop (>15 ft MRH) Required Design Pressures:

- ASCE 7 "Design Wind Loads: Other Structures: Rooftop Structures and Equipment for Buildings"
- Structure Shape = Square, flat terrain
- z = up to 7 ft, where z = height of stand or curb + ½ unit height
- Lateral GC_f = 1.90; Uplift GC_f = 1.50

VISIT ECALC.IO/FORCES

FOR DESIGN AID CALCULATORS AND RESOURCES RELATED TO THIS TER & GUIDES HEREIN, OR SCAN THE QR CODE RIGHT >

UNIT REACTIONS FROM WIND GUIDE

DIRECTIVE: This guide is intended for use by a design professional. Design parameters shall abide all specifications and limitations stated in this report. Design professional shall consider all forces, including seismic and snow loads, per the governing building code. Unit reactions obtained from this guide shall be verified by a registered Professional Engineer. Reactions are applicable for unit-to-host connections only. Sample calculations are provided below.

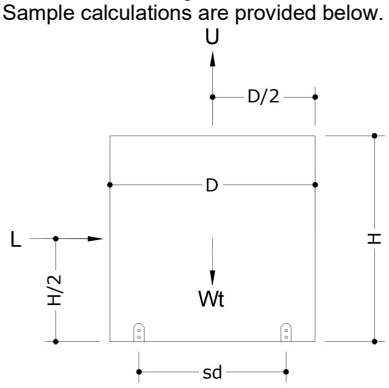

Design Parameters:

- Lateral Wind Pressure, P_lat
- Unit Height, H
- Unit Width, W
- Support Spacing across Depth, sd
- Uplift Wind Pressure, P_up
- Unit Depth, D
- Unit Weight, Wt
- Support Spacing across Width, sw

Unit Reaction Equations:

Long Side (Width x Height):

- Sliding Force, L = P_lat x W x H
- Uplift Force, U = P_up x W x D
- Total Tension per Long Side =
(L x H/2 + U x sd/2 – Wt x 0.6 x sd/2) / sd

Short Side (Depth x Height):

- Sliding Force, L = P_lat x D x H
- Uplift Force, U = P_up x W x D
- Total Tension per Short Side =
(L x H/2 + U x sw/2 – Wt x 0.6 x sw/2) / sw

Example: A (48" W x 36" D x 42" H), 250 lb net weight unit at wind pressures of 120 psf lateral and 95 psf uplift, on a 24" wide roof stand, shall have the following unit reactions:

Long Side (Width x Height):

1. Sliding Force, L = P_lat x W x H
   = (120 psf) x (48 in) x (42 in) x (1 in^2 / 144 ft^2) = **1680 lb**
2. Uplift Force, U = P_up x W x D
   = (95 psf) x (48 in) x (36 in) x (1 in^2 / 144 ft^2) **= 1140 lb**
3. Total Tension per Long Side =
   = (L x H/2 + U x sd/2 – Wt x 0.6 x sd/2) / sd
   = ((1680 lb x 42/2 in) + (1140 lb x 24/2 in) – (250 lb x 0.6 x 24/2 in)) / 24 in **= 1965 lb**

Short Side (Depth x Height):

1. Sliding Force, L = P_lat x D x H
   = (120 psf) x (36 in) x (42 in) x (1 in^2 / 144 ft^2) **= 1260 lb**
2. Uplift Force, U = P_up x W x D
   = (95 psf) x (48 in) x (36 in) x (1 in^2 / 144 ft^2) **= 1140 lb**
3. Total Tension per Short Side =
   = (L x H/2 + U x sw/2 – Wt x 0.6 x sw/2) / sw
   = ((1260 lb x 42/2 in) + (1140 lb x 48/2 in) – (250 lb x 0.6 x 48/2 in)) / 48 in **= 1046 lb**

IN ALL CONDITIONS IT IS THE RESPONSIBILITY OF THE PERMIT HOLDER TO ENSURE THE HOST STRUCTURE IS CAPABLE OF WITHSTANDING THE RATED GRAVITY, LATERAL, AND UPLIFT FORCES BY SITE-SPECIFIC DESIGN. NO WARRANTY OF ANY KIND, EXPRESSED OR IMPLIED, IS OFFERED BY ENGINEERING EXPRESS AS TO THE INTEGRITY OF THE HOST STRUCTURE TO CARRY DESIGN FORCE LOADS INCURRED BY THIS UNIT.

Copyright © Engineering Express® All Rights Reserved