ENGINEERINGEXPRESS.COM
POSTAL ADDRESS:
2234 NORTH FEDERAL HWY #7664
BOCA RATON, FL 33431

Technical Evaluation Report

DIVISION: 23 08 00 – COMMISSIONING OF HVAC

THIS DOCUMENT CONTAINS (9) PAGES.
ENGINEER DIGITAL OR ORIGINAL HAND SEAL REQUIRED FOR USE.
COPIES ARE NOT VALID FOR PERMIT.

(Subject to Renew January 1, 2026 or next code cycle)

EVALUATION SUBJECT: **CARRIER AC, HEAT PUMP & SPLIT UNITS (TOP DISCHARGE)** TER-23-69574

REPORT HOLDER:

CARRIER ENTERPRISE
8050 VISTA RESERVE BOULEVARD - SUITE 2200
ORLANDO, FL 32829, USA
(407) 982-7745
WWW.CARRIERENTERPRISE.COM

NOTE: THE GRAPHICAL DEPICTIONS IN THIS REPORT ARE FOR ILLUSTRATIVE PURPOSES ONLY AND MAY DIFFER IN APPEARANCE.

SCOPE OF EVALUATION (compliance with the following codes):

THIS IS A STRUCTURAL (WIND) PERFORMANCE EVALUATION ONLY. NO ELECTRICAL OR TEMPERATURE PERFORMANCE RATINGS OR CERTIFICATIONS ARE OFFERED OR IMPLIED HEREIN.
UNDER NO CIRCUMSTANCE DOES THIS PERFORMANCE EVALUATION GUARANTEE, IMPLY, OR STATE PERFORMANCE OF THE UNIT IS MAINTAINED DURING OR AFTER A DESIGN EVENT.

This Product Evaluation Report is being issued in accordance with the requirements of the **Florida Building Code Seventh Edition (2020) & Eighth Edition (2023)** per ASCE 7, FBC Building Ch. 16, FBC Building Sections 104.11 & 1522.2, FBC Existing Building Sections 707.1 & 707.2, FBC Mechanical 301.15, FBC Residential M1202.1 & M1301.1, FS 471.025, and Broward County Administrative Provisions 107.3.4. This report is also in accordance with the **International Building & Residential Codes (2012, 2015, 2018, & 2021).** The product noted in this report has been tested and/or evaluated as summarized herein.

IN ACCORDANCE WITH THESE CODES EACH OF THESE REPORTS MUST BEAR THE ORIGINAL SIGNATURE & RAISED SEAL OR DIGITAL SEAL OF THE EVALUATING ENGINEER.

SUBSTANTIATING DATA:

• Product Evaluation Documents
Substantiating documentation has been submitted to provide this TER and is summarized in the sections below.
• Structural Engineering Calculations
Structural engineering calculations have been prepared which evaluate the product based on comparative and/or rational analysis to qualify the following design criteria:

- Max. allowable lateral & uplift wind pressures certified herein
- Max. allowable sliding forces, uplift forces, & overturning moments (see Unit Reactions from Wind Guide on last page)
- Tie-down configuration and anchor capacity for concrete, aluminum, and steel host substrates (host by others).
- Unit panel wind pressure connection integrity

Calculation summary is included in this TER and appears herein.

LIMITATIONS & CONDITIONS OF USE:

Use of the product(s) listed herein shall be in strict accordance with this TER as noted herein and manufacturer-provided model specifications. Installation shall conform to the minimum standards stated in the referenced building code(s) in addition to the specifications and limitations stated herein. See herein for complete limitations & conditions of use.

OPTIONS:

This evaluation is valid for the models described herein. The critical unit designs have been determined and used in this evaluation. Any structural changes outside of the design as described herein would void this certification.

UNIT CASING MATERIALS:

0.86mm galv. sheet steel ASTM A653 EDDS cold rolled steel for removable top panel. 1.14mm galv. sheet steel ASTM A653 EDDS cold rolled steel for base pan. Side protector steel grille ASTM A510 Ø2.03mm vertical wire and Ø2.68mm horizontal wire, secured with #10-16 sheet metal screws into top and base pan. Contact Report Holder for further unit construction information.

STRUCTURAL PERFORMANCE:

Models referenced herein are subject to the following design limitations:

Maximum-Rated ASD Wind Pressures*:
± 119 psf Lateral, 94 psf Uplift

- Required design wind pressures shall be determined according to the guide provided in the Appendix (see last page of this report) or on a site-specific basis in accordance with ASCE 7 and applicable sections of the building code(s) being referenced in accordance with ASD methodology.
- Required design wind pressures shall be less than or equal to the maximum pressures listed herein.
- *Maximum-Rated ASD Wind Pressures indicate the maximum pressures that all units listed herein are approved for. Valid for at-grade and rooftop applications. See limitations herein.
- Valid for use inside and outside the High-Velocity Hurricane Zone (HVHZ).
- Site-specific wind analysis may produce alternate limitations provided that the maximum-rated wind pressures stated herein are not exceeded.

VISIT ECALC.IO/CARRIER

FOR ENGINEER CERTIFIED ORIGINALS & MORE INFORMATION ABOUT THIS DOCUMENT OR SCAN THE QR CODE TO THE RIGHT >

VISIT ENGINEERINGEXPRESS.COM/STORE **FOR ADDITIONAL PLANS, REPORTS & RESOURCES**

ORIGINAL SIGNATURE AND RAISED SEAL
OR DIGITAL SEAL REQUIRED TO BE VALID PER CODE:

RICHARD NEET LICENSE No. P.E. 86488 STATE OF FLORIDA PROFESSIONAL ENGINEER SIGNED:

Digitally signed by Richard Neet
Reason: PRINTED COPIES OF THIS DOCUMENT ARE NOT CONSIDERED SIGNED & SEALED. SIGNATURE MUST BE VERFIEID ON ANY ELECTRONIC COPIES
Date: 2024.06.05 10:40:14 -04'00'

THIS DOCUMENT CAN ONLY BE USED FOR ONE PERMIT SUBMITTED BY June 26, 2024
VALID ONLY FOR ZIP CODE: 33156
FOR USE ONLY BY: EXPRESS PERMITTING
Richard Neet FL PE86488 CA-9885

This item has been digitally signed and sealed by RICHARD NEET on the date adjacent to the seal. Printed copies of this document are not considered signed and sealed. FRAUD ALERT: PRINTED ORIGINALS MUST HAVE RAISED SEAL & PDF PLANS MUST HAVE A VERIFIED ELECTRONIC SIGNATURE OR IT IS FRAUDULENT. TO VERIFY VISIT ECALC.IO/DS TO LEARN MORE. REPORT FRAUDULENT USE OF THIS DOCUMENT TO TEAM@ENGINEERINGEXPRESS.COM

DIGITAL SEAL NOTICE: IF THIS DOCUMENT IS DIGITALLY SIGNED, THIS ITEM HAS BEEN DIGITALLY SIGNED BY THE ABOVE-SIGNING ENGINEER ON THE DATE ADJACENT TO THE SEAL. **PRINTED COPIES OF THIS DOCUMENT ARE NOT CONSIDERED SIGNED AND SEALED AND THE SIGNATURE MUST BE VERIFIED ON ANY ELECTRONIC COPIES**. VISIT ECALC.IO/DS FOR MORE INFORMATION.
PRINTED DOCUMENT NOTICE: IF THIS DOCUMENT IS PRINTED **& DOES NOT CONTAIN AN ENGINEER'S ORIGINAL SIGNATURE & SEAL, THIS DOCUMENT IS VOID & NOT VALID FOR USE. PHOTOCOPIES ARE NOT PERMITTED FOR USE.**

Copyright © Engineering Express® All Rights Reserved

The codes referenced above define APPROVED SOURCE (Section 202) as: "An independent person, firm or corporation, approved by the building official, who is competent and experienced in the application of engineering principles to materials, methods or systems analyses." Engineering Express® professionals meet the competency requirements as defined in the codes referenced herein and can seal their work. Engineering Express® is regularly engaged in conducting and providing engineering evaluations of single-element and full-scale building systems tests.

MODEL INFORMATION

Model Number	Unit Dimensions		
	MAX. WIDTH (in)	MAX. DEPTH (in)	MAX. HEIGHT (in)
24AB*	35.00	35.00	45.94
24AC*	35.00	35.00	45.94
24AN*	35.00	35.00	47.44
24AP*	35.00	35.00	45.69
24SC*	31.19	31.19	38.88
24SP*	35.00	35.00	45.69
24TP*	35.00	35.00	38.90
24VN*	35.00	35.00	47.19
25HB*	35.00	35.00	39.13
25HC*	35.00	35.00	45.94
25HN*	35.00	35.00	47.44
25HP*	35.00	35.00	45.69
25SC*	35.00	35.00	38.88
25SP*	35.00	35.00	38.88
25TP*7*	35.00	35.00	45.69
25VN*	35.00	35.00	47.19
27SC*5*	35.00	35.00	38.88
27SP*6*	35.00	35.00	38.88
CA14*	31.19	31.19	39.13
CA16*	35.00	35.00	28.44
CH14*	31.19	31.19	39.13
CH16*	35.00	35.00	45.69
CH17*	35.00	35.00	45.69
GA5S*N*	35.00	35.00	45.69
GA7T*N*	35.00	35.00	38.88
GH5S*N*	35.00	35.00	38.88
GH7T*N*	35.00	35.00	45.69

Copyright © Engineering Express® All Rights Reserved

MODEL INFORMATION NOTES

Cabinet Groups (also abbreviated herein as "Cab. Groups", "Cabinets", or "Cab." as needed) are designated by Engineering Express based on the unit cabinet construction and exterior panel layout.– see cabinet designation images herein. Model number characters marked by an asterisk (*) do not pertain to this structural certification and may be any combination of number and/or letters. Model information listed herein is based on information provided by the client. Unit models listed herein are permitted to be any of the cabinet groups listed herein.

Unit dimensions listed in the Model Information tables are unit net dimensions (as opposed to packing/shipping dimensions). Unit net weights shall be between 75 lb and 350 lb, typ. The dimensioned units shown herein are not to scale and are for illustrative purposes only. Dimension “W” is short for “width”, “D” for “depth”, and “H” for “height”. Note: For the units herein, dimensions width and depth are the same and may be used interchangeably. Unit appearance may vary. Please contact Report Holder for more information.

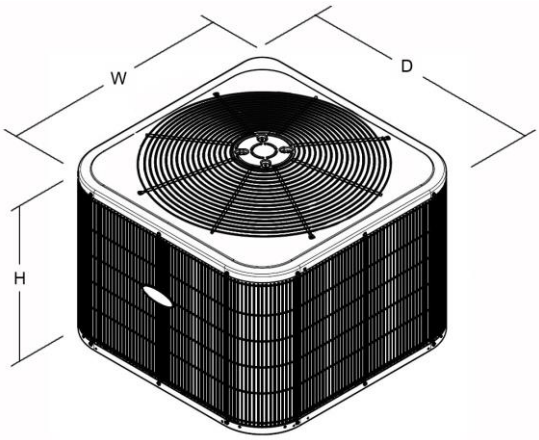

1 CABINETS I – IV: UNIT DIMENSIONS DIAGRAM
SCALE: NTS ISOMETRIC VIEW

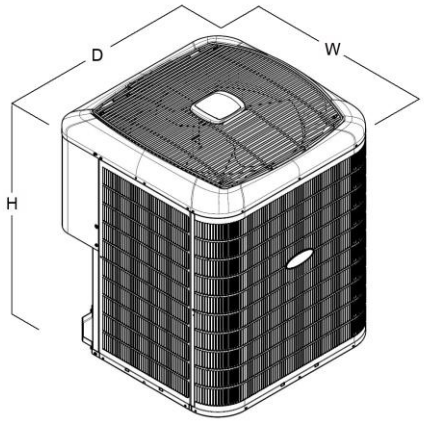

2 CABINET V: UNIT DIMENSIONS DIAGRAM
SCALE: NTS ISOMETRIC VIEW

Detail 1 Note:
This detail applies to Cabinet I (Mini), Cabinet II (Small), Cabinet III (Medium), & Cabinet IV (Large) unit models. Cabinet groups I-IV vary by unit size/overall dimensions. See model information tables for maximum unit sizes permitted by this evaluation.

Detail 1 & 2 Note:
The Details on this page are for defining the unit dimensions and panel designations as used in this evaluation only. Images are not to scale and are for illustration purposes only. Actual units may differ slightly in appearance.

REMAINDER OF PAGE INTENTIONALLY LEFT BLANK

Copyright © Engineering Express® All Rights Reserved

MODEL INFORMATION: CABINET DESIGNATIONS

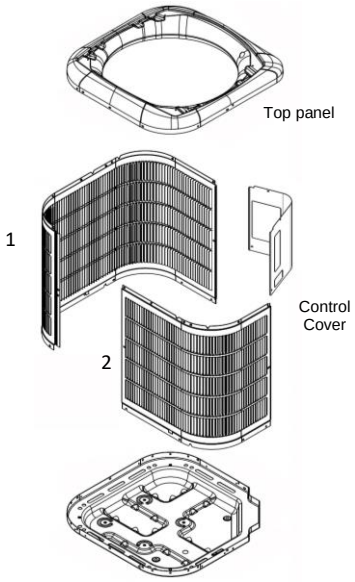

3 CABINET I (MINI) PANEL DESIGNATIONS
SCALE: NTS ISOMETRIC VIEW

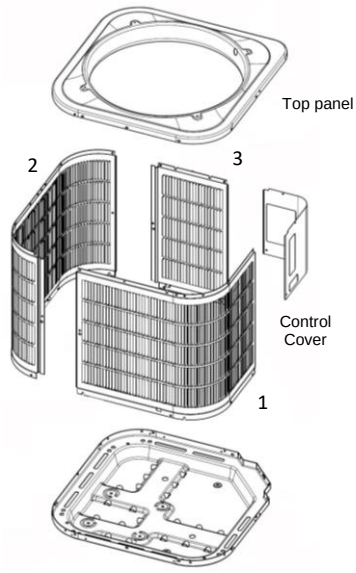

4 CABINET II (SMALL) PANEL DESIGNATIONS
SCALE: NTS ISOMETRIC VIEW

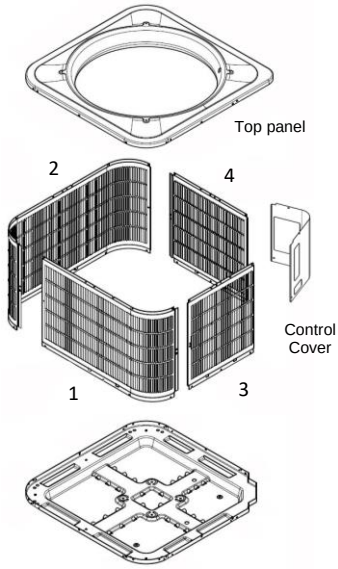

5 CABINETS III & IV PANEL DESIGNATIONS
SCALE: NTS ISOMETRIC VIEW

Detail 5 Note:
This detail applies to Cabinet III (Medium), and Cabinet IV (Large) unit models.

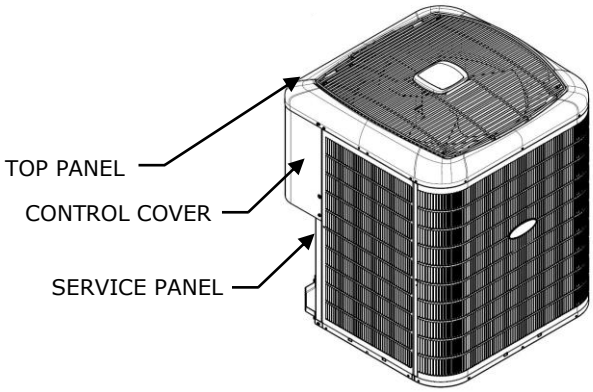

6 CABINET V PANEL DESIGNATIONS
SCALE: NTS ISOMETRIC VIEW

Details 3-6 Note:
The Details on this page are for defining the unit dimensions and panel designations as used in this evaluation only. Images are not to scale and are for illustration purposes only. Actual units may differ slightly in appearance.

Copyright © Engineering Express® All Rights Reserved

PANEL INTEGRITY SUMMARY

No additional screws are required for all unit installations up to the maximum-rated ASD wind pressures stated herein.

Panel integrity calculations were based on information provided by the client and manufacturer-listed specifications. Calculations are valid for all unit models listed herein, and specifications herein apply to all unit models listed herein (see "Model Information" section). All exterior panels were considered in the calculations and are covered by this certification. Panels were assigned various porosities depending on the ratio of louver/aperture area to total panel area, for the purposes of calculating the acting wind force on each panel. Screw sizes, quantities on panels, and panel characteristics were considered based on client-provided information and additional conservative assumptions. Screw quantities were checked to reinforce unit panels as needed.

TIE-DOWN SCHEDULE

Install. Cond.	Max. ASD Wind Pressures Lateral (Uplift)	Anchor to Host Structure (Host Structure is By Others)			Tie-Down Clips: Qty. (#) of Either: Type 1 Clips [1's] OR Type 2 Clips [2's]	# of Tie-Down Straps
		f'c = 3 ksi min. Concrete Host	1/8" min. ASTM A36 Steel Host	1/8" min. 6061-T6 Aluminum Host		
Ground	± 54 psf (0 psf)	A	N/A	N/A	(4) 1's or (4) 2's	0
Roof	± 84 psf (67 psf)	N/A	B	B	(8) 1's or (4) 2's	0
	± 119 psf (111 psf)	N/A	B	B	(8) 1's or (4) 2's	2

TIE-DOWN SCHEDULE NOTES (Continued Next Page)

TIE-DOWN SCHEDULE DIRECTIVE: The Tie-Down Schedule table above is divided by maximum wind pressure tiers (each row of the table). The typical installation condition(s) are also stated for each wind pressure tier. The unit installation site-specific wind pressures shall be equal to or below the listed maximum wind pressures. Tie-down specifications shall comply with the respective tier's stated provisions. Site-specific wind pressures that fall in between pressure tiers shall use, at minimum, the tie-down specifications as specified by the higher pressure tier. Ensure the host structure by others meets the minimum specifications as stated in the Anchor Schedule section of the table. The Tie-Down Schedule applies to all units described in this evaluation. See tie-down specifications and Details herein. The rooftop installation specifications are also permitted to be used at grade (to steel and aluminum host only. See Tie-Down Schedule). Contact Engineering Express for site scenarios outside the bounds of this evaluation.

Example 1: Say your installation is unit model being installed at grade to a concrete host, with site-specific wind pressures of ± 45 psf lateral and 0 psf uplift. In this case, you would need to follow, at minimum, the tie-down specifications corresponding to the ± 54 psf (0 psf) wind pressure tier row. This row only permits anchoring to concrete host structures. If your host structure is aluminum or steel, you would need to use, at minimum, the tie-down specifications corresponding to the ± 104 psf (83 psf) wind pressure tier row.

Reading across the pressure tier ± 54 psf (0 psf) row, this installation would require:

- Type "A" anchors to be used for anchoring the Tie-Down Clips to the host,
- Either (4) Type 1 clips, (1) per unit corner, OR (4) Type 2 clips, (1) per unit corner be used to tie-down the unit, AND
- (0) tie-down straps be used to tie-down the unit. (Straps are not required in this scenario).

Example 2: Say your installation is on the roof to an aluminum or steel host, with site-specific wind pressures of ± 96 psf lateral and 76 psf uplift. In this case, you would need to follow, at minimum, the tie-down specifications corresponding to the ± 119 psf (111 psf) wind pressure tier row. This row permits aluminum and steel host structures only. Anchoring to a concrete host structure would not be permitted in this example.

Reading across the pressure tier ± 119 psf (111 psf) row, this installation would require:

- Type "B" anchors to be used for anchoring the Tie-Down Clips to the host,
- Either (8) Type 1 clips, (2) per unit corner, OR (4) Type 2 clips, (1) per unit corner be used to tie-down the unit, AND
- (2) tie-down straps be used to tie-down the unit.

ANCHOR TO HOST STRUCTURE NOTES: In all cases, the host structure is by others. The anchor type shall be selected per the applicable wind pressure tier (row) and host structure substrate. Utilize (1) anchor per Type A tie-down clip and (2) anchors per Type B tie-down clip. Anchor specifications as represented in the Tie-Down Schedule are as follows:

A: Anchors to Concrete Hosts:
1/4" Ø DeWalt ULTRACON SS4 Anchor or equivalent with 1-3/4" embedment and 2-1/2 min. edge distance to any edge of the concrete, typ.

B: Anchors to Aluminum/Steel Hosts:
1/4" Ø, SAE Gr. 5 or stronger thru-bolt with 1" min. OD fender washers sized for 1/4" Ø bolts top and bottom and locking nut, typ. Provide 1/2" min. edge distance to any edge of the host structure and 1/2" min. spacing from neighboring thru-bolts, typ.

N/A: Not applicable.

Copyright © Engineering Express® All Rights Reserved

TIE-DOWN SCHEDULE NOTES (Continued from Previous Page)

TIE-DOWN CLIP NOTES: Tie-down clip quantities shall be per the Tie-Down Schedule herein.

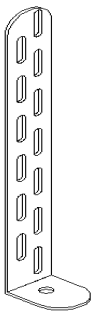

TYPE 1 TIE-DOWN CLIP:
(GROUND AND ROOF APPLICATIONS)

Type 1 tie-down clips shall be 1" min. wide, 0.068" min. thick, ASTM A653 Gr. 33 or stronger galv. steel.

The following are pre-approved by Engineering Express to meet the Type 1 Clip requirements:

- Miami Tech kit # CBCUTD4KG for ground install
- Miami Tech kit # CBCUTD4KR for roof install
- 1" wide CUTD per Florida Approval # FL19731.2

Fasten the clip to the host structure with (1) anchor per tie-down clip according to the "Anchor to Host Structure" specifications stated herein.
Fasten the clip to the unit base pan with (2) #10 SS 410 SMS, (1) screw per slot, typ.

TYPE 2 TIE-DOWN CLIP:
(GROUND AND ROOF APPLICATIONS)

Type 2 tie-down clips shall be 2" min. wide, 0.113" min. thick, ASTM A283 Gr. D or stronger galv. steel.

The following are pre-approved by Engineering Express to meet the Type 2 Clip requirements:

- BMP Clip part # TD042

Fasten the clip to the host structure with (2) anchors per tie-down clip according to the "Anchor to Host Structure" specifications stated herein.
Fasten the clip to the unit base pan with (4) #12 SAE Gr. 5 min. SMS, (1) screw per slot, typ.

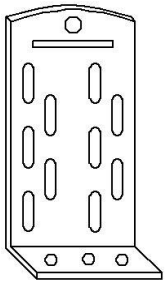

Tie-down clip height may vary but shall be adequate to facilitate the clip-to-unit SMS connections to the unit base pan. Verify clip height on site. Installers must ensure that screws used to fasten the tie-down clips with the unit base pan do not touch the coil to prevent any damage to the coil. Ensure all screws fully engage with unit. Tie-down clips shall sit flush on the host structure and flush against the unit. See the Tie-Down details herein. Position tie-down clips as follows:

- Where (4) clips are required, position (1) clip per unit corner, typ. Position each clip 3" min. away from the edge of the unit corner.
- Where (8) clips are required, position (2) clips per unit corner, typ. Position each clip 3" min. away from the edge of the unit corner.

TIE-DOWN STRAP NOTES: Tie-down strap quantities shall be per the Tie-Down Schedule herein.

Tie-down straps shall be 1" min. wide x 22 GA (.030") min. thick, UTS = 45 ksi min. (equiv. to ASTM A653 Gr. 33 or stronger) galv. steel. Position tie-down straps at either end of the unit, 3" minimum away from unit edge, typ. (See Tie-Down Details herein). Wrap each tie-down strap over the top and opposite sides of the unit and attach each strap end to the aluminum or steel host structure members (i.e. roof stand rails).

Attach each strap end to the host structure member with (2) #14, SAE Gr. 2 min. or SS SMS with 1/2" min. spacing between screws and 3/8" min. edge distance to any edge of strap and host structure member, typ. It is suggested that the straps attach to the undersides of the host structure members, but the straps are permitted to attach to any horizontal or vertical face of the host structure so long as all conditions stated herein are achieved. See the Tie-Down Details herein.

To prevent the straps from slipping, also attach each strap to roof of unit with (2) #10, SAE Gr. 2 min. or SS SMS with 3" min. end distance from edges of roof and positioned O.C. of strap, (1) each side, typ. See Tie-Down Details herein.

Tie-down strap lengths shall be determined by the installing contractor. Ensure strap lengths are such that the strap is neither excessively taut nor excessively slack once installed. A secure fit should be achieved. Neoprene pads may be placed between the unit and strap to protect the unit from damage/distortion. Straps may be removed for maintenance purposes but shall be replaced per the attachment directive herein following maintenance. **Tie-down straps must be in place before any named storm or similar high-wind event.**

TIE-DOWN DETAILS (Continued Next Page)

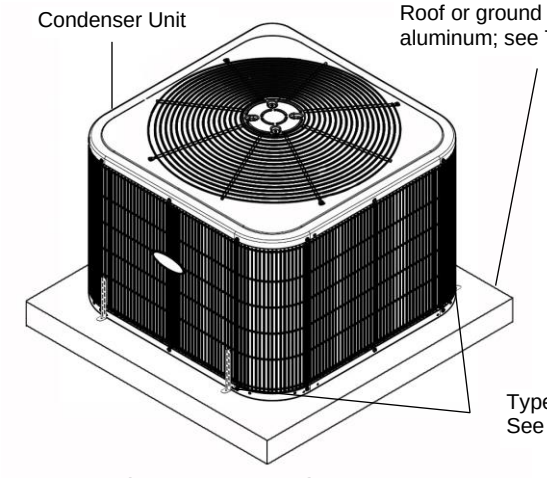

Note: Units shown are for illustration purposes only.

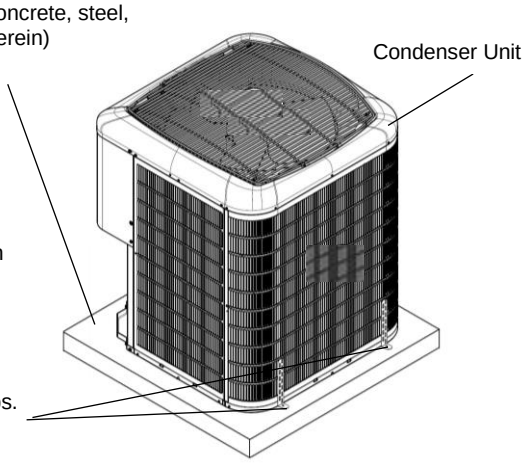

7 CAB. I – IV: SAMPLE CLIP PLACEMENT
SCALE: NTS ISOMETRIC VIEW

8 CABINET V: SAMPLE CLIP PLACEMENT
SCALE: NTS ISOMETRIC VIEW

Copyright © Engineering Express® All Rights Reserved

TIE-DOWN DETAILS (Continued from Previous Page)

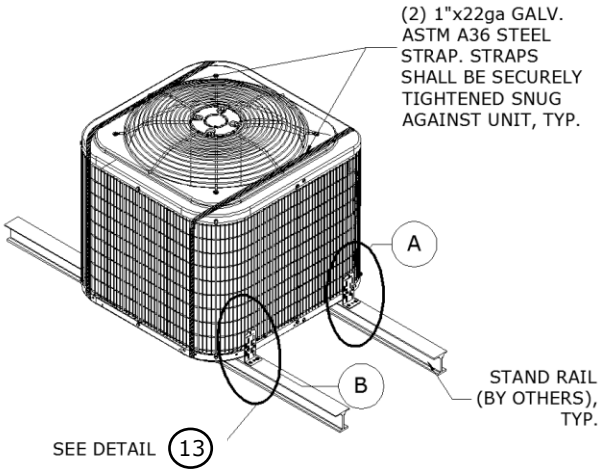

9 MECHANICAL UNIT
SCALE: NTS FRONT ISO. VIEW

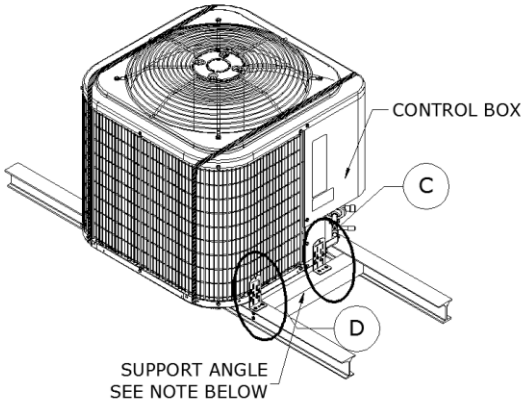

10 MECHANICAL UNIT
SCALE: NTS BACK ISO. VIEW

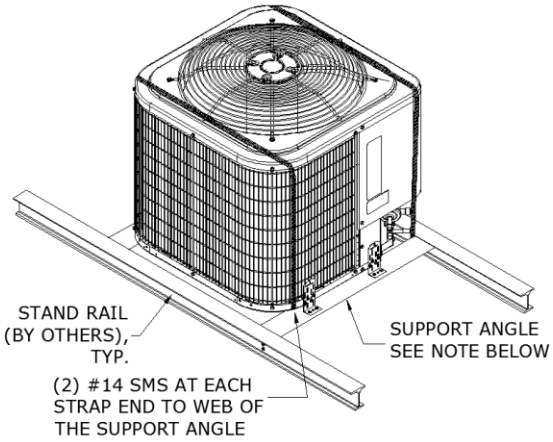

11 MECHANICAL UNIT
SCALE: NTS FRONT ISO. VIEW

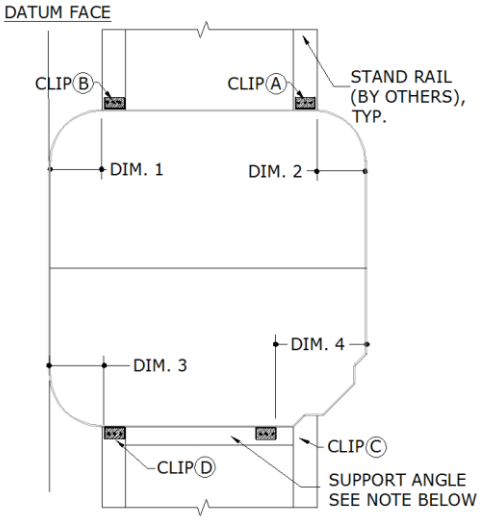

12 TIE-DOWN CLIP LAYOUT
SCALE: NTS PLAN VIEW

TIE-DOWN CLIP OFFSETS:

DIM. 1	5.00" MAX OFFSET FROM DATUM FACE
DIM. 2	5.00" MAX OFFSET FROM OPPOSITE FACE
DIM. 3	5.00" MAX OFFSET FROM DATUM FACE
DIM. 4	10.00" MAX OFFSET FROM OPPOSITE FACE

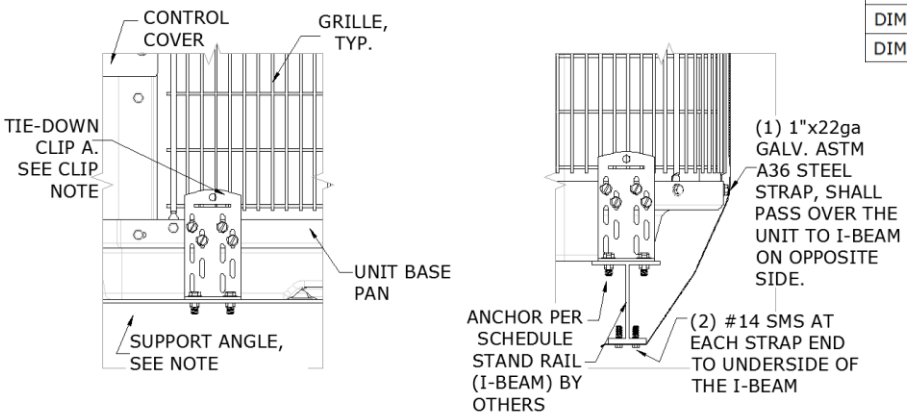

13 TIE-DOWN CLIPS & STRAPS
SCALE: NTS ELEVATION VIEW

Tie-Down Detail Notes:

1. Miami Tech support angle part number CBCAB30K, CBCAB42K, under NOA #16-0601.01 or equivalent is permitted.
2. Tie-Down Details apply to all Cabinet Groups / unit models listed herein unless noted otherwise.

Copyright © Engineering Express® All Rights Reserved

TERMINOLOGY

The following abbreviations may appear in this report: “Addtl.” for “additional”, “AHJ” for “Authority Having Jurisdiction”, “alum” for “aluminum”, “ASCE” for “American Society of Civil Engineers”, “ASD” for “Allowable Stress Design”, “ASTM” for “American Society for Testing and Materials”, “EA.” for “each”, “E.D.” for edge distance”, “EDDS” for “extra deep drawing steel”, “e.g.” for “*exempli gratia*” or “for example”, “equiv.” for “equivalent”, “FBC” for “Florida Building Code”, “FEA” for “Finite Element Analysis”, “FLCA” for “Florida Certificate of Authorization”, “FS” for “Florida Statutes”, “Fu” for “ultimate tensile strength” or “ultimate tensile stress”, “Fy” for “yield strength” or “yield stress” “GA” for “gauge”, “GR.” or “Gr.” for “grade”, “HVAC” for “heating, ventilation, and air conditioning”, “HVHZ” for “High-Velocity Hurricane Zone”, “i.e. ” for “*id est*” or “in other words”, “in” for “inch”, “lb” for “pound (force)”, “max.” for “maximum”, “min.” for “minimum”, “mm” for “millimeter”, “NTS” for “not to scale”, “O.C. ” for “on center”, “OD” for “outer diameter”, “pcf” for “pounds (force) per cubic foot”, “PE” for “Professional Engineer”, “qty” for “quantity”, “SAE” for “Society of Automotive Engineering”, “SMS” for “sheet metal screws”, “SS” for “stainless steel”, “TER” for “Technical Evaluation Report”, “typ.” for “typical”, “ult” for “ultimate loads”, “U.N.O.” for “unless noted otherwise”, “UTS” for “ultimate tensile strength” or “ultimate tensile stress”, “WLL” for “working load limit”, “w/o” for “without”, “YS” for “yield strength” or “yield stress”, “#” for “number”, “&” for “and”, and “Ø” for “diameter”. Please visit ecalc.io/glossary for additional abbreviation clarifications.

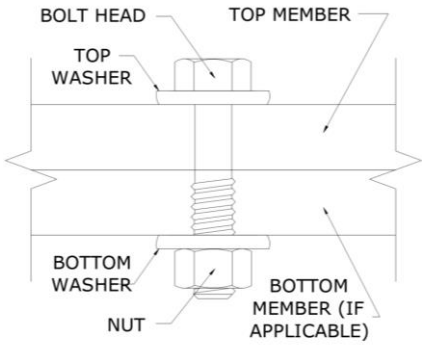

SAMPLE THRU-BOLT
SCALE: NTS SECTION VIEW

Note: The term “Thru-Bolt” or through bolt, if used herein, refers to a bolt passing through the member(s) in contact and is fastened by a nut at the end opposite the screw head. Nut shall be equivalent to or exceed the strength of the bolt U.N.O. Nut shall be sized to accommodate the same nominal diameter as the bolt U.N.O. See diagram above-right for a sample thru-bolt configuration.

Note: For instances herein which list material specifications as *“[material type] or stronger”:*
U.N.O. herein, the term “stronger” refers to a material with a UTS value equal to or greater than the UTS value of the stated material type. Consult appropriate literature for established material UTS values.

Note: Equivalent steel gauge thicknesses as used in this evaluation, U.N.O., are as follows:
22 GA (.030”), 20 GA (.036”), 18 GA (.048”), 16 GA (.060”), 14 GA (.075”), 12 GA (.098”).

LIMITATIONS & CONDITIONS OF USE, CONTINUED

Use of this product shall be in strict accordance with this TER as noted herein. The supporting host structure shall be designed to resist all superimposed loads as determined by others on a site-specific basis as may be required by the authority having jurisdiction. Host structure conditions that are not accounted for in this product’s respective anchor schedule shall be designed for on a site-specific basis by a registered Professional Engineer. No evaluation is offered for the host supporting structure by use of this document. Adjustment factors noted herein and the applicable building codes must be considered, where applicable. Product components shall be of the material(s) specified in the manufacturer-provided product specifications. All supporting components which are permanently installed shall be protected against corrosion, contamination, and other such damage at all times. All fasteners and anchors shall be installed in accordance with the applicable provisions specified herein in addition to the anchor/fastener manufacturers’ published installation instructions. Fasteners must penetrate the supporting members such that the full length of the threaded portion is embedded within the main member.

All of the wind-resisting exterior panels (with accompanying retrofits) individually meet or exceed their capacity to resist the design wind loads as stated in the calculations as required by the codes and standards stated herein. Due to the indeterminate nature of these units, distortion, deflection, and material deformation cannot be accurately evaluated, but with the diaphragm action of external components and internal stiffeners, the base unit (with accompanying retrofits stated herein as applicable) has the capacity to withstand the design wind loads without detaching from the unit and becoming flying debris.

Survivability: Evaluation reports are valid for a newly installed unit and do not include certification of the product beyond a design event or if impacted by any debris. Inspections shall be implemented annually by the end user and after every named storm. All fasteners and cabinet components are to be verified, and all damaged, loose, corroded and/or broken fasteners and cabinet components shall be replaced to ensure structural integrity against hurricane wind forces. Contact this office for any reevaluation needs or as designated by the Authority Having Jurisdiction.

Durability: Components or component assemblies shall not deteriorate, crack, fail, or lose functionality due to galvanic corrosion or weathering. All supporting components which are permanently installed shall be protected against corrosion, contamination, and other such damage at all times. Each component or component assembly shall be supported and oriented in its intended installation position. All exposed plastic components shall be certified to resist sunlight exposure as specified by ASTM B117, or ASTM G155 in Broward or Miami-Dade counties.

Extent of Certification: Certification pertains to the overall structural integrity of the unit components listed within the evaluation as required by code, subject to the limitations and criteria stated herein. Operability during or after a design event is not included in this certification. Water infiltration is outside the bounds of this certification. No other certifications are intended other than as described herein. This evaluation alone does not offer any evaluation for large missile impact debris or cyclic wind requirements unless specifically stated herein.

Proj. #	Remarks	By	Checked	Date	Proj. #	Remarks	By	Checked	Date
23-69574	Initial Issue	MRT	ER/RN	01/12/2024					
23-69574	Add new models	MARH	EPR	05/24/2024					

Copyright © Engineering Express® All Rights Reserved

APPENDIX A: DESIGN WIND PRESSURE GUIDE

Max. Ult. Wind Speed (V_{ult})	Max. MRH (Roof Height)	Exposure Category	Required Design Wind Pressures (ASD)	
			Lateral Pressure	Uplift Pressure
140 mph	At-Grade (0 ft)	C	± 26 psf	0* psf
		D	± 31 psf	0* psf
	100 ft	C	± 63 psf	50 psf
		D	± 71 psf	56 psf
	200 ft	C	± 72 psf	57 psf
		D	± 80 psf	63 psf
175 mph	At-Grade (0 ft)	C	± 40 psf	0* psf
		D	± 49 psf	0* psf
	100 ft	C	± 98 psf	77 psf
		D	± 111 psf	87 psf
	200 ft	C	± 113 psf	89 psf
		~~D~~	~~± 124 psf~~	~~98 psf~~
186 mph	At-Grade (0 ft)	C	± 46 psf	0* psf
		D	± 54 psf	0* psf
	100 ft	C	± 111 psf	87 psf
		~~D~~	~~± 125 psf~~	~~99 psf~~
	~~200 ft~~	~~C~~	~~± 127 psf~~	~~100 psf~~
		~~D~~	~~± 140 psf~~	~~111 psf~~

~~100 psf~~ Note: Any table values with the format shown left, if present, indicate design wind pressures and site conditions that are **not approved for use** by this evaluation. Seek additional engineering or contact this firm for design solutions.

DIRECTIVE: This design pressure guide is for reference only and shall be approved for use by the Authority Having Jurisdiction (AHJ). If the design pressures listed in this guide are not used, required design pressures shall be calculated separately. For site-specific scenarios classified as Exposure Category B, the required design pressures stated for Exposure Category C in the above guide shall be used or design pressures shall be calculated separately. For heights and parameters beyond the parameters listed in this guide, visit our Online Calculator via the website link (https://ecalc.io/forces) or QR Code below, or obtain calculations separately by others.

The required ASD design pressures listed in this guide were calculated per the table's listed corresponding site conditions. The project design professional or permitting contractor shall verify that the site-specific conditions are equal to or less than the approved design parameters listed in the guide. Per the note below table: any values shown as "~~XX psf~~", indicate wind pressures and corresponding site conditions that are **not valid for use** with this evaluation (exceeds the max. rated pressures).

*Note: Per the codes and standards referenced herein, uplift is not required for mechanical equipment at-grade. If uplift at-grade is required by the AHJ, contact this firm for a site-specific evaluation.

At-Grade (0 ft MRH) Required Design Pressures:

- ASCE 7 "Design Wind Loads: Other Structures"
- Structure Shape = Square, flat terrain
- Height of structure (unit + stand or curb, if used) = 6 ft max.
- Width of unit = 1 ft min., Depth of unit = 11 in min.

Rooftop (>15 ft MRH) Required Design Pressures:

- ASCE 7 "Design Wind Loads: Other Structures: Rooftop Structures and Equipment for Buildings"
- Structure Shape = Square, flat terrain
- z = up to 7 ft, where z = height of stand or curb + ½ unit height
- Lateral GC_f = 1.90; Uplift GC_f = 1.50

VISIT ECALC.IO/FORCES

FOR DESIGN AID CALCULATORS AND RESOURCES RELATED TO THIS TER & GUIDES HEREIN, OR SCAN THE QR CODE RIGHT >

UNIT REACTIONS FROM WIND GUIDE

DIRECTIVE: This guide is intended for use by a design professional. Design parameters shall abide all specifications and limitations stated in this report. Design professional shall consider all forces, including seismic and snow loads, per the governing building code. Unit reactions obtained from this guide shall be verified by a registered Professional Engineer. Reactions are applicable for unit-to-host connections only. Sample calculations are provided below.

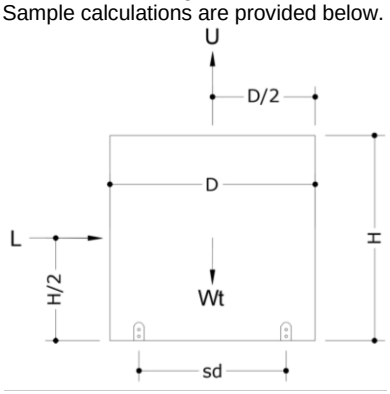

Design Parameters:

- Lateral Wind Pressure, P_lat
- Unit Height, H
- Unit Width, W
- Support Spacing across Depth, sd
- Uplift Wind Pressure, P_up
- Unit Depth, D
- Unit Weight, Wt
- Support Spacing across Width, sw

Unit Reaction Equations:

Long Side (Width x Height):

- Sliding Force, L = P_lat x W x H
- Uplift Force, U = P_up x W x D
- Total Tension per Long Side =
(L x H/2 + U x sd/2 – Wt x 0.6 x sd/2) / sd

Short Side (Depth x Height):

- Sliding Force, L = P_lat x D x H
- Uplift Force, U = P_up x W x D
- Total Tension per Short Side =
(L x H/2 + U x sw/2 – Wt x 0.6 x sw/2) / sw

Example: A (48" W x 36" D x 42" H), 250 lb net weight unit at wind pressures of 120 psf lateral and 95 psf uplift, on a 24" wide roof stand, shall have the following unit reactions:

Long Side (Width x Height):

1. Sliding Force, L = P_lat x W x H
   = (120 psf) x (48 in) x (42 in) x (1 in^2 / 144 ft^2) = **1680 lb**
2. Uplift Force, U = P_up x W x D
   = (95 psf) x (48 in) x (36 in) x (1 in^2 / 144 ft^2) **= 1140 lb**
3. Total Tension per Long Side =
   = (L x H/2 + U x sd/2 – Wt x 0.6 x sd/2) / sd
   = ((1680 lb x 42/2 in) + (1140 lb x 24/2 in) – (250 lb x 0.6 x 24/2 in)) / 24 in **= 1965 lb**

Short Side (Depth x Height):

1. Sliding Force, L = P_lat x D x H
   = (120 psf) x (36 in) x (42 in) x (1 in^2 / 144 ft^2) **= 1260 lb**
2. Uplift Force, U = P_up x W x D
   = (95 psf) x (48 in) x (36 in) x (1 in^2 / 144 ft^2) **= 1140 lb**
3. Total Tension per Short Side =
   = (L x H/2 + U x sw/2 – Wt x 0.6 x sw/2) / sw
   = ((1260 lb x 42/2 in) + (1140 lb x 48/2 in) – (250 lb x 0.6 x 48/2 in)) / 48 in **= 1046 lb**

IN ALL CONDITIONS IT IS THE RESPONSIBILITY OF THE PERMIT HOLDER TO ENSURE THE HOST STRUCTURE IS CAPABLE OF WITHSTANDING THE RATED GRAVITY, LATERAL, AND UPLIFT FORCES BY SITE-SPECIFIC DESIGN. NO WARRANTY OF ANY KIND, EXPRESSED OR IMPLIED, IS OFFERED BY ENGINEERING EXPRESS AS TO THE INTEGRITY OF THE HOST STRUCTURE TO CARRY DESIGN FORCE LOADS INCURRED BY THIS UNIT.

Copyright © Engineering Express® All Rights Reserved