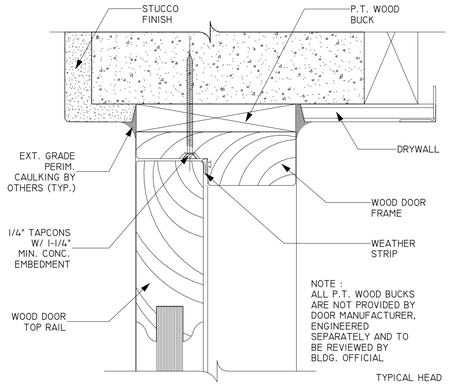

1 A-6.5 WOOD DOOR HEAD DETAIL
6" = 1'-0"

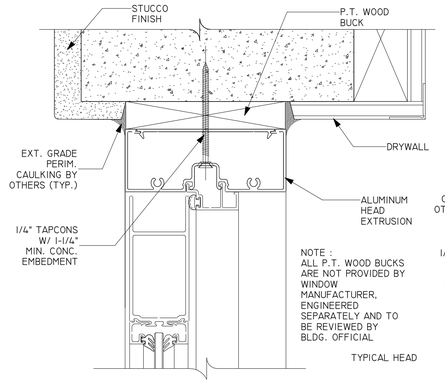

2 A-6.5 ALUM. DOOR HEAD DETAIL
6" = 1'-0"

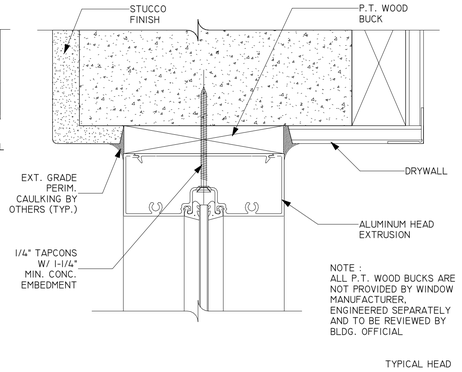

3 A-6.5 ALUM. DOOR SIDELITE HEAD DETAIL
6" = 1'-0"

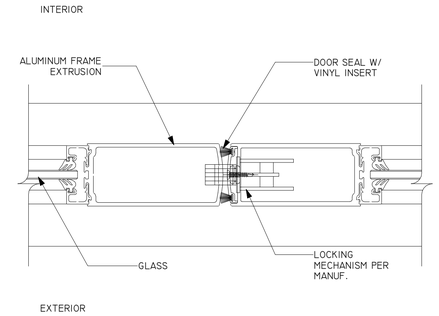

4 A-6.5 ALUM. DOOR MEETING RAIL DETAIL
6" = 1'-0"

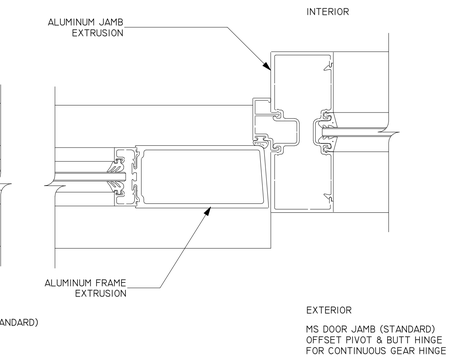

5 A-6.5 ALUM. DOOR JAMB DETAIL
6" = 1'-0"

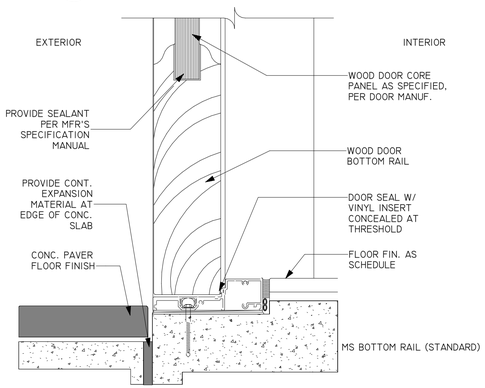

6 A-6.5 WOOD DOOR SILL DETAIL
6" = 1'-0"

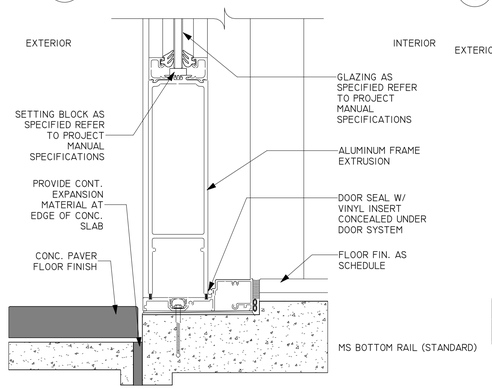

7 A-6.5 ALUM. DOOR SILL DETAIL
6" = 1'-0"

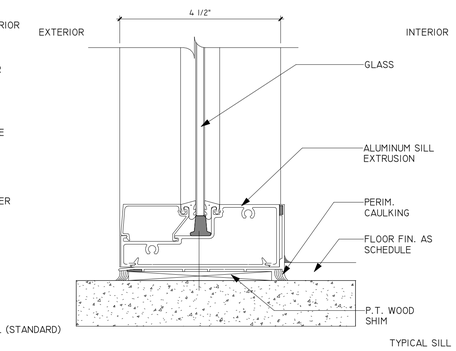

8 A-6.5 ALUM. DOOR SIDELITE SILL DETAIL
6" = 1'-0"

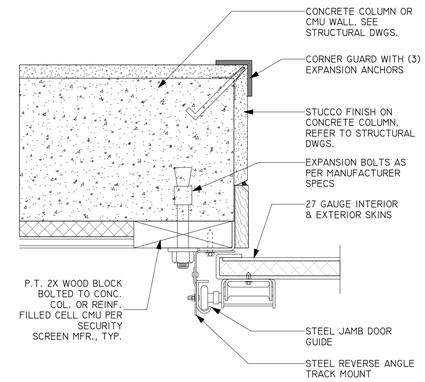

11 A-6.5 OVERHEAD GARAGE DOOR JAMB DETAIL
3" = 1'-0"

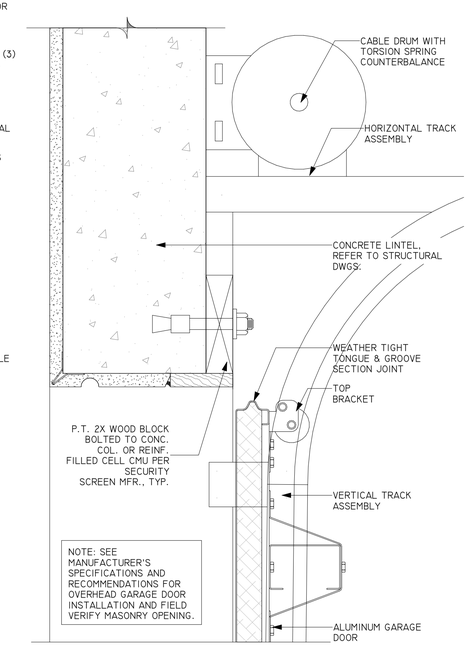

12 A-6.5 OVERHEAD GARAGE DOOR HEAD DETAIL
3" = 1'-0"

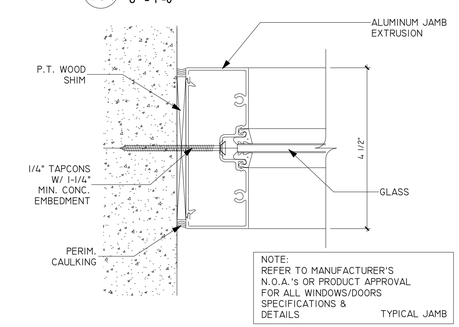

9 A-6.5 ALUM. DOOR SIDELITE JAMB DETAIL
6" = 1'-0"

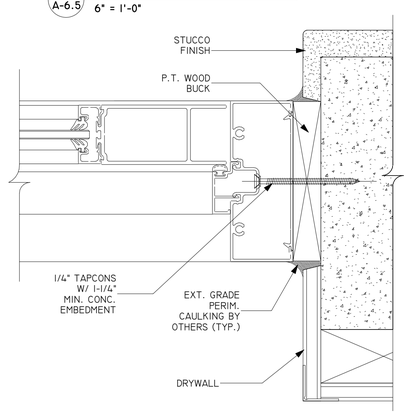

10 A-6.5 ALUM. DOOR JAMB DETAIL 1
6" = 1'-0"

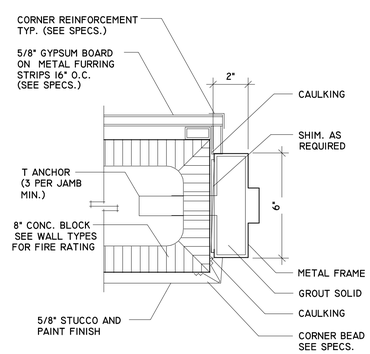

14 A-6.5 JAMB DETAIL
3" = 1'-0"

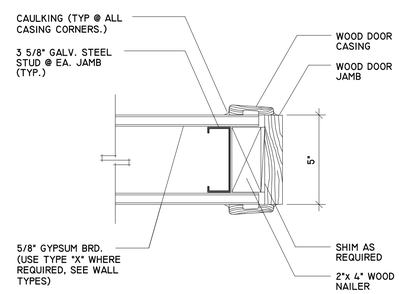

15 A-6.5 JAMB DETAIL
3" = 1'-0"

13 A-6.5 OVERHEAD GARAGE DOOR THRESHHOLD DETAIL
3" = 1'-0"

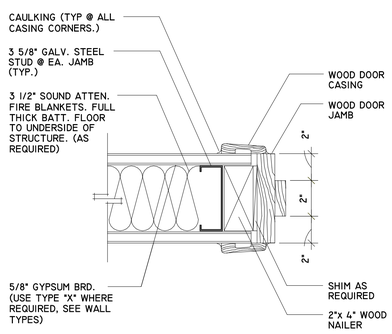

16 A-6.5 JAMB DETAIL
3" = 1'-0"

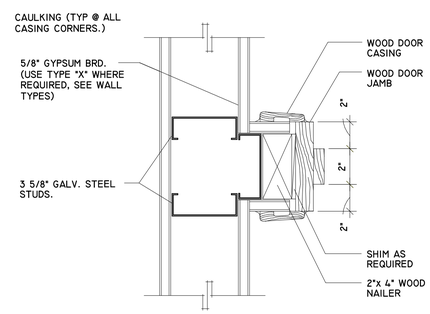

17 A-6.5 JAMB DETAIL
3" = 1'-0"

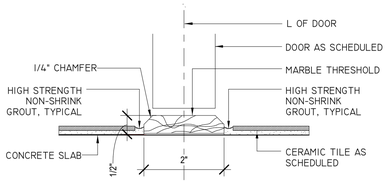

18 A-6.5 DETAIL THRESHOLD
6" = 1'-0"

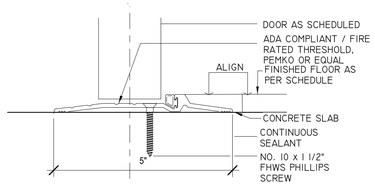

19 A-6.5 DETAIL THRESHOLD
6" = 1'-0"

REVISIONS		
Rev.	Date	Description

FIDANZA'S FAMILY HOUSE
PERMIT SET
11041 SW 77TH AVE, PINECREST, FL 33156

Registration Lic. #AA0003568 STATE OF FLORIDA
Arc.Bitectural Seal
JORGE L. VILLAVICENCIO
REGISTERED ARCHITECT
No. AR0012110

VILLA & ASSOCIATES INC.
ARCHITECTURE - PLANNING - INTERIOR DESIGN
5801 SW 69 AVENUE - MIAMI, FLORIDA 33155
TEL. 305-613-0865 - E-Mail Jvillarchitect@gmail.com
CONSULTANT : ARCHI-TEK STUDIO CORP.
TEL. 305-799-8016 - E-Mail magullar@architekstudio.com

JORGE L VILLAVIC ENCIO
Digitally signed by JORGE L VILLAVICENCIO
Date: 2023.08.28 11:48:33 -04'00'

DATE: 10-20-2022	SCALE: AS SHOWN
PROJECT NO: DOOR DETAILS	
DRAWING NO : A-6.5	