HVAC NOTES

1. GENERAL
   A. ALL WORKMANSHIP AND MATERIALS SHALL BE IN STRICT ACCORDANCE WITH THE APPLICABLE NATIONAL, STATE (FLORIDA BUILDING CODE) AND LOCAL CODES, RULES AND ORDINANCE.
   B. MECHANICAL PLANS IN GENERAL ARE DIAGRAMMATIC IN NATURE, AND ARE TO BE READ IN CONJUNCTION WITH ARCHITECTURAL, PLUMBING, ELECTRICAL AND STRUCTURAL PLANS AND SHALL BE CONSIDERED AS ONE SET OF DOCUMENTS. DUCT AND PIPING OFFSETS, BENDS AND TRANSITIONS WILL BE REQUIRED TO PROVIDE AND INSTALL A COMPLETE FUNCTIONAL SYSTEM AND SHALL BE PROVIDED BY THE CONTRACTOR AT NO ADDITIONAL COST TO THE OWNER. DO NOT SCALE DRAWINGS FOR THE EXACT LOCATION OF EQUIPMENT, PIPING, DUCTWORK, ETC.
   C. THESE DRAWINGS ARE NOT INTENDED TO SHOW EVERY MINOR DETAIL, BUT THE CONTRACTOR SHALL FURNISH AND INSTALL ALL ITEMS REQUIRED FOR A COMPLETE ACCEPTABLE WORKING INSTALLATION.
   D. ALL WORK SHALL BE PERFORMED BY A LICENSED CONTRACTOR IN A FIRST CLASS WORKMANLIKE MANNER. THE COMPLETE SYSTEM SHALL BE FULLY OPERATIVE AND ACCEPTABLE BY THE ARCHITECT AND / OR ENGINEER MUST BE CONDITION OF THE CONTRACT.
   E. ALL REQUIRED INSURANCE SHALL BE PROVIDED BY THE CONTRACTOR FOR PROTECTION AGAINST PUBLIC LIABILITY AND PROPERTY DAMAGE FOR THE DURATION OF THE WORK.
   F. THE CONTRACTOR SHALL GUARANTEE ALL MATERIALS AND WORKMANSHIP FREE FROM DEFECTS FOR A PERIOD NOT LESS THAN 1 YEAR FROM THE DATE OF ACCEPTANCE, UNLESS OTHERWISE NOTED.
   G. CONTRACTOR WILL PAY FOR ALL PERMITS, FEES, INSPECTIONS AND TESTS.
   H. THE CONTRACTOR SHALL VISIT THE JOB SITE AND THOROUGHLY FAMILIARIZE WITH EXISTING CONDITIONS.
   I. PRIOR TO INSTALLING EQUIPMENT AND / OR FABRICATING DUCTWORK, HVAC CONTRACTOR SHALL CHECK THAT THERE IS SUFFICIENT CLEARANCES FOR EQUIPMENT, DUCTWORK, ETC. AND ALSO TO AVOID ANY INTERFERENCE WITH THE PROCESS OF CONSTRUCTION.
   DUCTWORK TRUNK LINE AND DROP LOCATIONS MAY VARY FROM PLAN DUE TO TRUSS CONFIGURATION.
   J. AS BUILT DRAWINGS SHALL BE SUBMITTED TO OWNER AT THE COMPLETION OF PROJECT.
2. CONTRACTOR SHALL SUBMIT SHOP DRAWINGS ON ALL EQUIPMENT, FOR REVIEW PRIOR TO PURCHASING.
3. DESIGN PARAMETERS:
   A. OUTDOOR DESIGN TEMPERATURE (SUMMER): 91°F DB AND 77°F WB
   B. OUTDOOR DESIGN TEMPERATURE (WINTER): 46°F
   C. INDOOR DESIGN TEMPERATURE (SUMMER): 75°F DB
   D. INDOOR DESIGN TEMPERATURE (WINTER): 72°F DB
4. ALL THERMOSTATS SHALL HAVE HEATING MODE MAXIMUM SETTING OF 75 F, AND COOLING MODE MINIMUM SETTING OF 70 F. THE THERMOSTAT SHALL BE ARRANGED TO PREVENT THE SIMULTANEOUS OPERATION OF HEATING AND COOLING.
5. ELECTRICAL CONTROLS AND POWER WIRING: UNDER ELECTRICAL CONTRACT.
6. EQUIPMENT SPECIFIED BY MANUFACTURER'S NUMBER SHALL INCLUDE ALL ACCESSORIES, CONTROLS, ETC., LISTED IN THE CATALOG AS STANDARD WITH THE EQUIPMENT. OPTIONAL OR ADDITIONAL ACCESSORIES SHALL BE FURNISHED AS SPECIFIED.
7. MATERIALS:
   A. REFRIGERANT PIPING: SHALL BE TYPE L SOFT DRAWN, COPPER TUBING, DEHYDRATED FOR REFRIGERANT USE. SIZED AS SHOWN ON DRAWINGS OR AS PER AIR CONDITIONING EQUIPMENT MANUFACTURER'S RECOMMENDATIONS.
   B. INSULATION: REFRIGERANT SUCTION PIPING SHALL BE INSULATED WITH 1/2" THICK FOAMED PLASTIC INSULATION, FIRE RETARDANT TYPE. INSULATION SHALL BE INSTALLED IN PIPING BEFORE ASSEMBLY. NO SPLIT INSULATION WILL BE ACCEPTABLE. SEAL JOINTS WITH MANUFACTURER'S APPROVED ADHESIVE AND GREY TAPE.
   C. DUCTWORK:
      A. ALL HVAC DUCTWORK SHALL CONFORM TO SMACNA STANDARDS. ALL EXTERIOR DUCTWORK SHALL BE GALVANIZED SHEETMETAL. ALL INTERIOR DUCTWORK SHALL BE FIBERGLASS BOARD UNLESS OTHERWISE NOTED AND CONFORM WITH LOCAL CODES. FIBERGLASS DUCT BOARDS SHALL BE RESISTANT TO CONDENSATION, MOLDS AND FUNGI. ALL DUCTS SHALL BE CLEANED AND FILLED WITH AND EPA-REGISTERED ANTI-MICROBIAL AGENT. DUCTWORK SHALL BE 1-1/2" THICK (R=6.0) OPERATING STATIC PRESSURE: ±2 IN. WG. (500 PA)
      B. EXHAUST AIR - MINIMUM 30 GAGE, GALVANIZED METAL OR MINIMUM 26 GAGE ALUMINUM.
      RANGE HOOD TO BE 400 CFM MAXIMUM. IF MORE THAN 400 CFM MAKE UP AIR MUST BE SHOWN AS PER FBC-MECH 505.2. MECH. CONTRACTOR SHALL FIELD COORDINATE WITH EQUIPMENT MANUFACTURER PRIOR TO EQUIPMENT INSTALLATION.
      C. ALL DUCT DIMENSIONS ARE CLEAR INSIDE DIMENSIONS.
      D. FLEXIBLE INSULATED DUCTWORK WITH 1 1/2" FIBERGLASS INSULATION WITH FSK VAPOR BARRIER, CLASS 1 AIR DUCT, UL. R-6.0 MIN.
      E. OFFER DUCTWORK: 26 GA. MIN. GALVANIZED STEEL, HAVING A SMOOTH INTERIOR SURFACE WITH JOINTS RUNNING IN THE DIRECTION OF AIRFLOW AND WITHOUT SHEET METAL SCREWS OR OTHER FASTNERS IN THE AIR STREAM. MAXIMUM LENGTH SHALL NOT EXCEED 25 FEET. WALL CAPS SHALL BE PROVIDED WITH BACKDRAFT DAMPER.
8. AIR DISTRIBUTION DEVICES AND ACCESSORIES SHALL BE TITUS OR APPROVED EQUAL.
9. ALL HVAC DUCT ELBOWS MUST BE FURNISHED WITH APPROVED TURNING VANES.
10. CORRECTION OF ANY DEFECTS SHALL BE COMPLETED WITHOUT ADDITIONAL CHARGE AND SHALL INCLUDE REPLACEMENTS OR REPAIRS OF ANY OTHER PHASE OF THE INSTALLATION WHICH MAY HAVE BEEN DAMAGED OR IS NOT OPERATING PROPERLY.
11. PROVIDE METAL ROUND FITTINGS WITH SCOOP AT ALL FLEXIBLE DUCT CONNECTION TO SUPPLY DUCT.
12. PROVIDE ACCESS DOORS AS REQUIRED FOR ALL MECHANICAL EQUIPMENT TO SERVICE AND VISUALLY CHECK ROTATION OF FANS AND MOTORS, ADJUST OR REPLACE CONTROLS, ETC.
13. TEST AND BALANCE: AN INDEPENDENT CONTRACTOR SHALL TEST AND BALANCE ALL VENTILATION AND AIR CONDITIONING SYSTEMS. SUBMIT FOUR COPIES OF TEST AND BALANCE REPORT TO OWNER FOR APPROVAL.
14. ARCHITECTURAL AND / OR ENGINEERING EXPENSES THAT ARE INCURRED DUE TO REVISIONS FOR SUBSTITUTIONS BY THE CONTRACTOR SHALL BE PAID FOR BY THE CONTRACTOR.
15. ALL MATERIALS SHALL BE NEW AND SHALL BEAR UNDERWRITER'S LABEL, WHERE APPLICABLE.
16. CONTROLS: AIR CONDITIONING UNITS SHALL BE STARTED AND STOPPED THRU INDIVIDUAL THERMOSTAT. INDIVIDUAL THERMOSTATS SHALL START/STOP SUPPLY FANS AND ACTIVATE COOLING/HEATING SYSTEMS AS SELECTED.
17. IF THERE ARE ANY CHANGES IN ENGINEER'S DRAWINGS, IN DESIGN OR IN EQUIPMENT, WITHOUT ENGINEER'S CONSENT, THE AC CONTRACTOR SHALL ASSUME ALL RESPONSIBILITIES FOR THE PROJECT.
18. NO SUBSTITUTION WILL BE CONSIDERED PRIOR TO BID UNLESS WRITTEN REQUEST FOR APPROVAL HAS BEEN RECEIVED BY THE ARCHITECT OR ENGINEER AT LEAST 10 DAYS PRIOR TO THE DATE OF BID. SUCH REQUEST SHALL INCLUDE THE NAME OF EQUIPMENT OR MATERIAL FOR WHICH IT IS TO BE SUBSTITUTED.

HVAC SYMBOL LEGEND

SYMBOL	DESCRIPTION
	SUPPLY DUCT
	RETURN/EXHAUST DUCT
	FLEXIBLE DUCT
	ELBOW W/ TURNING VALVES
EF #	CEILING EXHAUST FAN # CFM
	EXHAUST REGISTER
	CEILING DIFFUSERS
	OUTDOOR AIR LOUVER / RETURN AIR GRILLE AT WALL
	SUPPLY AIR GRILLE AT WALL
T	*COOLING THERMOSTAT / HUMIDISTAT*
X A X B #	X: AIR DEVICE TYPE AXB: NECK SIZE # CFM
	CONDENSATE DRAIN LINE
	REFRIGERANT LINES SET
AHU	AIR HANDLING UNIT
CFM	CUBIC FEET PER MINUTE
CU	CONDENSING UNIT
CD	CONDENSATE DRAIN LINE
EF	EXHAUST FAN UNIT
GWH	GAS WATER HEATER
RA	RETURN AIR
REF. G&L REG.	*REFRIGERANT GAS & LIQUID LINES*
SA	SUPPLY AIR
OBD	OPPOSED BLADE DAMPER
VD	VOLUME DAMPER
UD	*UNDERCUT DOOR*

N– NEW DEVICE
E– EXISTING TO REMAIN
RL– RELOCATE EXISTING DEVICE, NEW LOCATION
RM– REMOVE EXISTING DEVICE
RP– REPLACE EXISTING DEVICE WITH NEW

AIR DISTRIBUTION SCHEDULE

SYMBOL	USE	TYPE	ACCESORIES	DESIGN MANUFACTURER & MODEL No.
A	SUPPLY AIR	LINEAR 2 SLOT DIFFUSER	INSULATED PLENUM 15" DEFLECTION	TITUS FL–15 HIGHTHROW
B	RETURN AIR / TRANSFER	LINEAR 2 SLOT RETURN DIFFUSER	INSULATED PLENUM	TITUS FL–15 JETTHROW
C	RETURN AIR / TRANSFER	CEILING/WALL RETURN/EXH.	–	TITUS 350 FL

NOTE:
1. PROVIDE SPIN–IN COLLAR WITH VOLUME DAMPER AT TRUNK TO BRANCH CONNECTION.
2. PROVIDE 4 WAY DIFFUSION UNLESS NOTE ON PLAN.
3. REFER TO ARCHITECT PLANS FOR CEILING TYPE.
4. FINAL COLOR SELECTION SUBJECT TO ARCHITECT APPROVAL.
5. PROVIDE INSULATION ON THE BACK OF DIFFUSER IF IN UNCONDITIONED SPACE.
6. MAXIMUM NC 19.
7. ALL AIR DISTRIBUTION DEVICE & ACCESSORIES SHALL BE ALUMINUM CONSTRUCTION.

MITSUBISHI ELECTRIC TRANE HVAC US: CITY MULTI VRF OUTDOOR UNIT SCHEDULE

System Tag		System 1
Tag Reference		C/U-4
Nominal Data	M-NET Address	N/A
	Model Number	NTSKSH09A112AA
	Modules	
	Nominal Cooling Capacity (BTU/h)	9,000
	Sencible Capacity (BTU/h)	6,930
	Nominal Heating Capacity (BTU/h)	13,200
	Cooling Efficiency SEER 2	20.5
	Heating COP @ 47°F HSPF2	9
Design Conditions	Unit Dimensions W x D x H in	39 x 13 x 35
	Design Cooling Outdoor Temp DB (°F)	95.0
	Design Heating Outdoor Temp WB (°F)	43.0
	Max Pipe Length from BC or 1st Joint (feet)	0.0
	Refrig Pipe Dim High/Low Pressure (inch) (See Note 4)	1/4 / 3/8
Performance Data	Corrected Cooling Total Capacity (BTU/h)	9,145.0
	Corrected Heating Capacity (BTU/h)	12,372.2
Compressor Data	Compressor Type	
	Compressor Quantity	
Electrical Data	Voltage / Phase	208/230V / 1-phase
	MCA 208/230 or [460V]	14
	Recommended Fuse Size (RFS)	15
	MOCP	24

NOTES:
1. *NOMINAL COOLING CAPACITIES ARE BASED ON INDOOR COIL EAT OF 80/67°F (DB/WB), OUTDOOR OF 95°F (DB)*
2. *NOMINAL HEATING CAPACITIES ARE BASED ON INDOOR COIL EAT OF 70°F (DB), OUTDOOR OF 43°F (WB)*
3. *EFFICIENCY VALUES FOR EER, IEER, COP ARE BASED ON AHRI 1230 TEST METHOD FOR MIXTURE OF DUCTED & NON–DUCTED INDOOR UNITS...*
4. *FOR SYSTEMS WITH MULTIPLE MODULES, REFRIGERANT PIPE DIMENSIONS INDICATE TOTAL SYSTEM COMBINED PIPING DOWNSTREAM OF MODULE TWINNING.*
5. *ADDED FIELD CHARGE LISTED IS IN ADDITION TO FACTORY CHARGE, THIS MUST BE UPDATED BASED UPON FINAL AS–BUILT PIPING LAYOUT.*
6. *PROVIDE COATING FOR COASTAL USE*

MITSUBISHI ELECTRIC TRANE HVAC US: CITY MULTI VRF INDOOR UNIT SCHEDULE

System Tag		System 1
Tag Reference		AHU-4
Nominal Data	Room Name	STORAGE
	M-NET Address	N/A
	Model	NTKCKS09A112AA
	Type	Ceiling-Cassette (Four-Way)
	Nominal Cooling Capacity (BTU/h)	9,000
	Nominal Heating Capacity (BTU/h)	13,200
Design Conditions	Unit Dimensions W x D x H in	24 x 24 x 10
	Cooling Design Entering Temp DB/WB (°F) / (Water in temp)	80.0/67.0
	Heating Design Entering Temp DB/WB (°F) / (Water in temp)	70.0
	Cooling Diversity Full/Partial (See Note 5, 6)	FULL DEMAND
	Heating Diversity Full/Partial (See Note 5, 6)	FULL DEMAND
	Refrig Pipe Dim Liquid/Suction (inch)	3/8 / 1 1/4
Performance Data	Cooling Total Capacity (BTU/h)	9,000
	Cooling Sensible Capacity (BTU/h)	6,930
	Heating Capacity (BTU/h)	10,887.6
	Estimated Cooling Coil LAT (°F) / (LWT)	57.7
	Estimated Heating Coil LAT (°F) / (LWT)	100.1
Fan / Water Flow Data	Fan Speed Setting	LOW
	Peak Fan Airflow (cfm) / [Design gpm]	230
	Max Fan ESP Setting 208V/230V (IN WG)	0.3
Electrical Data	Voltage / Phase	208/230V/1-phase
	Power Cooling 208V/230V (kW)	
	Power Heating 208V/230V (kW)	
	Electrical MCA/MFS	Powered by Outdoor

CARRIER SINGLE CIRCUIT SPLIT SYSTEMS - 2 STAGE (208/1/60)

AHU UNIT DESIGNATION	AHU#1,2
CU UNIT DESIGNATION	C/U#1,2
NOM TONS	8-8
SYSTEM SEER	16.0
SYSTEM SEER2	16.0
MODEL NO:	24TPA760-3
MODEL NO:	PV4CNB006
CFM	2000 @ .5"
REFRIGERANT	R-410A
AMBIENT	95
CAP (MBH) @ 80/67 (TC/SC)	57.5 / 40.9
CAP (MBH) @ 75/62 (TC/SC)	52.8 / 41.7
CONDENSINGUNIT DATA:	
COMPRESSOR QTY / STAGES	1 / 2
COMPRESSOR 1 RLA - LRA	25.6 - 158.0
COND. FAN FLA	1.2
MCA	33.2
MOCP	50
DIMENSIONS (LxWxH) (IN)	35 x 35 x 39
STD WEIGHT (LBS)	284
AIR HANDLER DATA:	
EVAP. FAN FLA - BHP	6.8 - 3/4
HEATER KW (208 / 230)	7.5 / 10.0
MCA (208 / 230)	53.8 / 58.5
MOCP (208 / 230)	60 / 60
DIMENSIONS (LxWxH) (IN)	22 x 25 x 60
STD WEIGHT (LBS)	207
REF. TUBES O.D. (IN):	
SUCTION LINE	1-1/8
LIQUID LINE	3/8

CARRIER SINGLE CIRCUIT SPLIT SYSTEMS (208/1/60)

AHU UNIT DESIGNATION	AHU#3 & 5
CU UNIT DESIGNATION	C/U#3 & 5
NOM TONS	2-2
SYSTEM SEER	16.0
SYSTEM SEER2	15.5
MODEL NO:	24SRA642-3
MODEL NO:	F24DNX060
CFM	1450 @ .5"
REFRIGERANT	R-410A
AMBIENT	95
CAP (MBH) @ 80/67 (TC/SC)	36.7 / 25.7
CAP (MBH) @ 75/62 (TC/SC)	35.1 / 31.7
CONDENSINGUNIT DATA:	
COMPRESSOR QTY / STAGES	1 / 1
COMPRESSOR 1 RLA - LRA	25.0 - 120.0
COND. FAN FLA	1.52
MCA	32.8
MOCP	50
DIMENSIONS (LxWxH) (IN)	32 x 32 x 33
STD WEIGHT (LBS)	221
AIR HANDLER DATA:	
EVAP. FAN FLA - BHP	6.1 - 3/4
HEATER KW (208 / 230)	7.5 / 10.0
MCA (208 / 230)	53.8 / 58.5
MOCP (208 / 230)	60 / 60
DIMENSIONS (LxWxH) (IN)	22 x 23 x 54
STD WEIGHT (LBS)	210
REF. TUBES O.D. (IN):	
SUCTION LINE	7/8
LIQUID LINE	3/8

NOTES:
1. *PROVIDE FACTORY INSTALLED DOUBLE WALL INSULATED CABINET.*
2. *PROVIDE FACTORY INSTALLED ECM BLOWER MOTOR.*
3. *PROVIDE FACTORY INSTALLED NON CORROSIVE VERTICAL AND HORIZONTAL DRAIN PANS.*
4. *PROVIDE FACTORY INSTALLED ALUMINUM EVAPORATOR COIL WITH ELECTRONIC EXPANSION VALVE.*
5. *AIR HANDLER UNIT WITH CONDENSATE OVERFLOW SWITCH CONNECTION.*

CU NOTES:
1. *PROVIDE FACTORY INSTALLED COMPOSITE BASE FOR OUTDOOR UNIT.*
2. *PROVIDE FACTORY INSTALLED ALUMINUM CONDENSER COIL.*
3. *PROVIDE FIELD INSTALLED OEM PROGRAMMABLE THERMOSTAT.*
4. *UNITS SHALL CONFORM TO FLORIDA BUILDING CODE LATEST EDITION FOR HVAC INSTALLATION.*
5. *CONTRACTOR MUST VERIFY TOTAL REFRIGERANT PIPING LENGTH AND PIPING LIFT THAT IS NOT GREATER THAN THOSE VALUES RECOMMENDED BY MANUFACTURER.*

OUTSIDE AIR REQUIRED CALCULATION SCHEDULE [CFM]

UNIT		# OF PEOPLE	SFT	0.35 ACH	CFM/PEOPLE	O/A REQUIRED	O/A PROVIDED
AHU#1	FIRST LEVEL	6	2220.2	116.6	7.5	116.6	120
AHU#2	FIRST LEVEL	3	2199.5	115.5	7.5	115.5	120
AHU#3	SECOND LEVEL	3	1597.6	83.9	7.5	83.9	85
AHU#4	FIRST LEVEL	0	83.6	4.4	7.5	4.4	5
AHU#5	SECOND LEVEL	2	1002	52.6	7.5	52.6	55

NOTES:
1. DESIGN BASED ON THE VENTILATION RATE PROCEDURE PER F.B.C. MECH. TABLE 403.3.
2. THE DESIGN WILL NEED TO BE RE-EVALUATED IF, AT A LATER TIME, CHANGES OCCUR IN THE USAGE OF THE SPACE, OR IF UNUSUALLY STRONG SOURCES OF SPECIFIC CONTAMINANTS ARE INTRODUCED INTO THE SPACE.

2

HVAC DESIGN REQUIRES:

	YES	NO
DUCT SMOKE DETECTOR	–	X
FIRE DAMPER(S)	–	X
SMOKE DAMPER(S)	–	X
FIRE RATED ENCLOSURE	–	X
FIRE RATED ROOF/FLOOR CEILING ASSEMBLY	–	X
FIRE STOPPING	–	X
SMOKE CONTROL	–	X

R – VALUES:
–ROOF N/A
–EXPOSED FLOOR R–0
–EXT WALLS R–4.1
–GLASS IMPACT, FOR WINDOWS U–0.90 SHGC–0.44
–GLASS IMPACT, FOR SKYLIGHT N/A

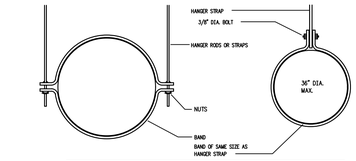

MINIMUM HANGER SIZES FOR ROUND DUCT							
DUCT DIAMETER	MAXIMUM SPACING	WIRE		ROD		STRAP	
		QUAN	SIZE	QUAN	SIZE	QUAN	SIZE
10" OR LESS	12'–0"	1	12 GAUGE	1	1/4"	1	1"x22 GAUGE
11"–18"	12'–0"	2	12 GAUGE	1	1/4"	1	1"x22 GAUGE
		1	8 GAUGE	–––	–––	–––	–––
19"–24"	12'–0"	2	10 GAUGE	1	1/4"	1	1"x22 GAUGE
25"–36"	12'–0"	2	8 GAUGE	1	3/8"	1	1"x20 GAUGE
37"–50"	12'–0"	–––	–––	2	3/8"	2	1"x20 GAUGE
51"–60"	12'–0"	–––	–––	2	3/8"	2	1"x18 GAUGE
61"–84"	12'–0"	–––	–––	2	3/8"	2	1"x18 GAUGE

NOTES :
1. STRAPS ARE GALVANIZED STEEL ; RODS ARE UNCATED OR GALVANIZED STEEL; WIRE IS BLACK ANNEALED, BRIGHT BASIC OR GALVANIZED STEEL. ALL ARE ALTERNATIVES.
2. TABLE ALLOWS FOR CONVENTIONAL WALL THICKNESS, AND JOINTS SYSTEMS PLUS ONE LB/SF OF INSULATION WEIGHT. IF HEAVIER DUCTS ARE TO BE INSTALLED, ADJUST HANGER SIZES TO BE WITHIN THEIR LOAD LIMITS.

ROUND DUCT HANGERS
NO SCALE

HVAC DUCT DETAILS
NTS

STRAP HANGERS

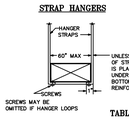

TRAPEZE HANGERS

TABLE 4–1
RECTANGULAR DUCT HANGERS MINIMUM SIZE

MAXIMUM HALF OF DUCT PERIMETER	PAIR AT 10 FT SPACING		PAIR AT 8 FT SPACING		PAIR AT 5 FT SPACING		PAIR AT 4 FT SPACING	
	STRAP	WIRE / ROD	STRAP	WIRE / ROD	STRAP	WIRE / ROD	STRAP	WIRE / ROD
P ≤ 30"	1"x22 GA.	10 GA. (.135")	1"x22 GA.	10 GA. (.135")	1"x22 GA.	12 GA. (.108")	1"x22 GA.	12 GA. (.108")
P ≤ 72"	1"x18 GA.	3/8"	1"x20 GA.	1/4"	1"x22 GA.	1/4"	1"x22 GA.	1/4"
P ≤ 96"	1"x16 GA.	3/8"	1"x18 GA.	3/8"	1"x20 GA.	3/8"	1"x22 GA.	1/4"
P ≤ 120"	1.5"x16 GA.	1/2"	1"x16 GA.	3/8"	1"x18 GA.	3/8"	1"x20 GA.	1/4"
P ≤ 168"	1.5"x16 GA.	1/2"	1.5"x16 GA.	1/2"	1"x16 GA.	1/2"	1"x18 GA.	3/8"
P ≤ 192"	–	1/2"	1.5"x16 GA.	1/2"	1"x16 GA.	1/2"	1"x16 GA.	3/8"
P ≤ 193" UP	SPECIAL ANALYSIS REQUIRED							

AS PER SMACNA TABLE 4–1 & FIG. 4–4

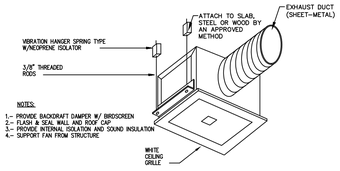

NOTES:
1.– PROVIDE BACKDRAFT DAMPER W/ BIRDSCREEN
2.– FLASH & SEAL WALL AND ROOF CAP
3.– PROVIDE INTERNAL ISOLATION AND SOUND INSULATION
4.– SUPPORT FAN FROM STRUCTURE

CABINET EXHAUST FAN DETAIL
N.T.S.

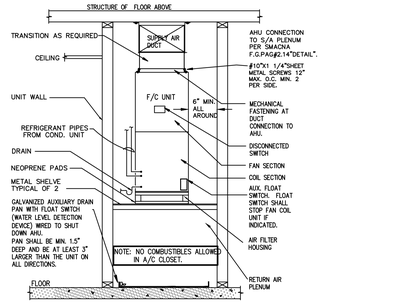

NOTE:
1. PROVIDE MINIMUM 4" SERVICE/ MAINTENANCE AREA AROUND AIR HANDLING UNIT.
2. PROVIDE FLOAT SWITCH IN DRAINPAN WIRED TO SHUT DOWN AC UNIT IN CASE OF CONDENSATE STOPPAGE. AS PER FBC 307.2.3.

AIR HANDLER UNIT # 1,2 MOUNTING DETAIL
N.T.S.

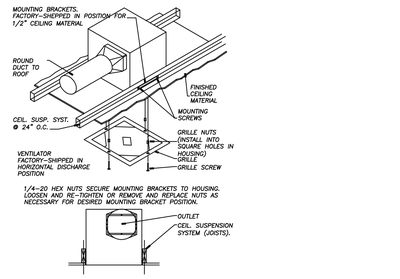

CEILING EXHAUST FAN TYPICAL INSTALLATION
N.T.S.

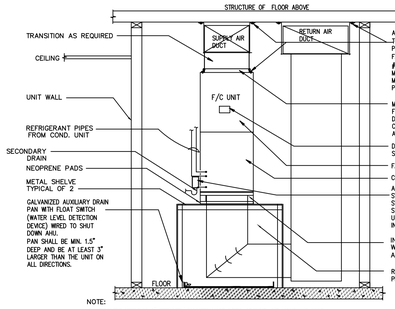

NOTE:
1. PROVIDE MINIMUM 4" SERVICE/ MAINTENANCE AREA AROUND AIR HANDLING UNIT.
2. PROVIDE FLOAT SWITCH IN DRAINPAN WIRED TO SHUT DOWN AC UNIT IN CASE OF CONDENSATE STOPPAGE. AS PER FBC 307.2.3.

AIR HANDLER UNIT #3 MOUNTING DETAIL
N.T.S.

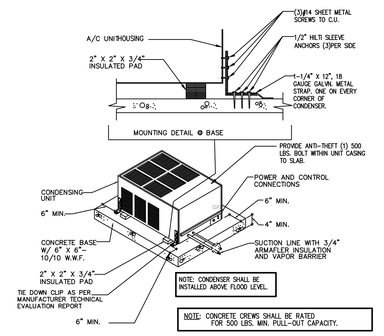

CONDENSING UNIT MOUNTING DETAIL
TIE DOWN AS PER MIAMI–DADE APPROVED METHOD. N.T.S.

TRAP PIPE DIAMETER	A/C CAPACITY
3/4"ø	UP TO 2 TONS
1"ø	UP TO 5 TONS
1–1/4"ø	MORE THAN 5 TONS

DRAIN TRAP
N.T.S.

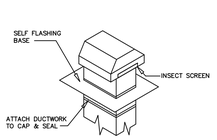

ROOF CAP DETAIL
N.T.S.

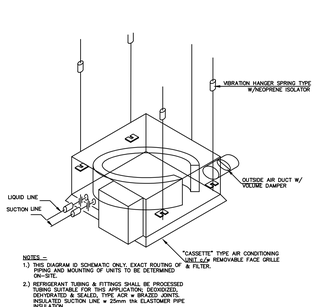

NOTES –
1.) THIS DIAGRAM ID SCHEMATIC ONLY, EXACT ROUTING OF PIPING AND MOUNTING OF UNITS TO BE DETERMINED ON–SITE.
2.) REFRIGERANT TU