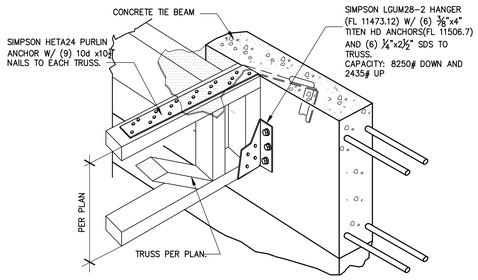

1 TRUSSES DETAIL ON EXTERIOR WALL.
NTS

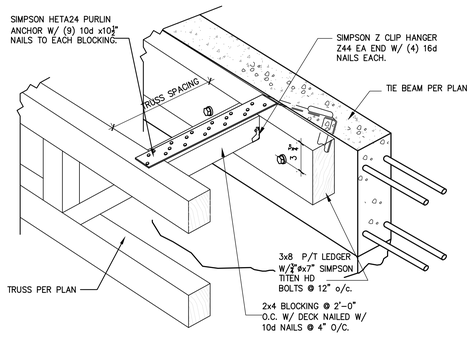

2 LEDGER TO WALL/TRUSS PARALLEL
NTS

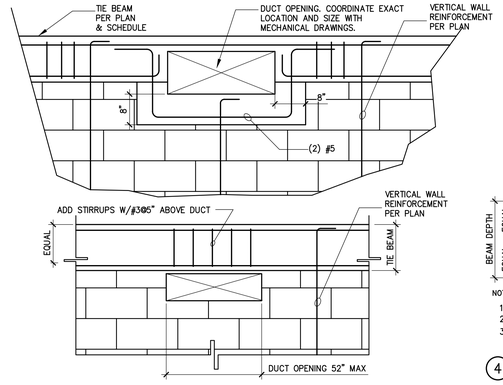

3 DUCT OPENING IN INTERIOR WALL

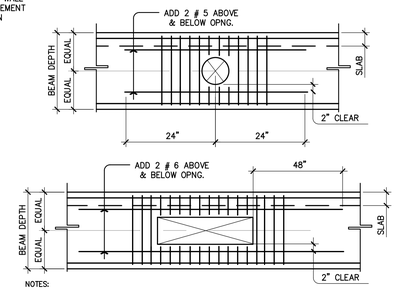

NOTES:
1.- SEE BEAM SCHEDULE FOR REINFORCING AND ADDITIONAL TIES.
2.- SLEEVE DEPTH NOT TO EXCEED 1/3 BEAM DEPTH.
3.- ADD (4) #3 @ 4" O/C. EACH SIDE OF OPENING, AND AT 4" ABOVE AND BELOW THE OPENING.

4 TYPICAL BEAM SLEEVE OPENING

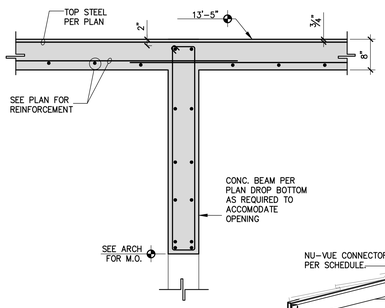

5 INTERIOR WALL SLAB CONN.

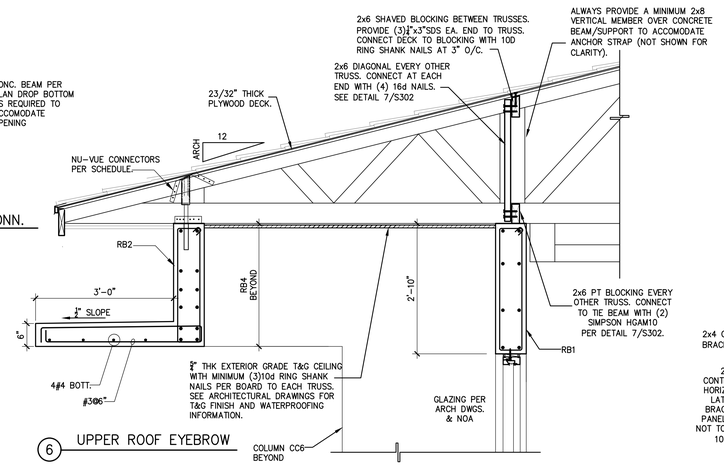

6 UPPER ROOF EYEBROW

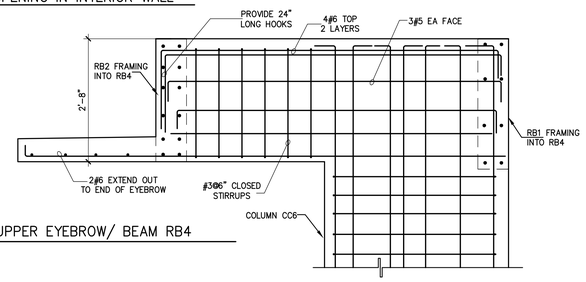

7 UPPER EYEBROW/ BEAM RB4

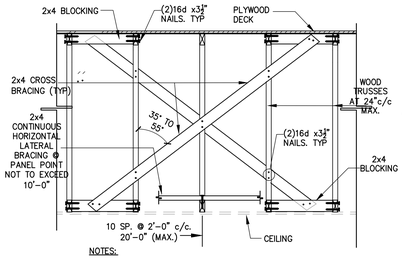

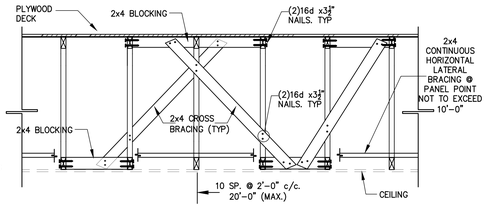

ALTERNATE CROSS BRACING DETAIL

NOTES:

HORIZONTAL BRACING OF BOTTOM CHORD:
1. PROVIDE ONE ROW OF HORIZONTAL BRACING AS SHOWN EVERY 10'-0" OF SPAN OF TRUSS.
2. BRACING MEMBERS TO BE CONTINUOUS 2x4 WOOD MEMBERS AT SPLICE LOCATIONS, LAP BRACING MEMBERS OVER AT LEAST THREE TRUSSES ATTACHED TO BC W/(2)16dx3½". SEE DETAIL 9 THIS SHEET.

DIAGONAL BRACING:
1. PROVIDE CROSS BRACING, AS SHOWN, AT EACH END OF EACH ROW OF PERMANENT HORIZONTAL BRACING, AND AT NO MORE THAN 20'-0" SPACING IN DIRECTION OF HORIZONTAL BRACING.
2. BRACING MEMBERS TO BE 2x4 WOOD MEMBERS.
3. ALWAYS PROVIDE X-BRACE NEXT TO GIRDER AND SPACE THEM FROM IT.

8 ROOF BRACING DETAIL

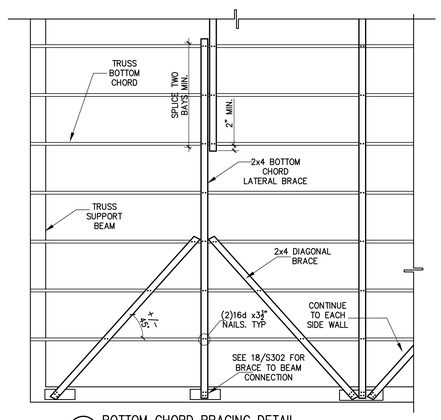

9 BOTTOM CHORD BRACING DETAIL

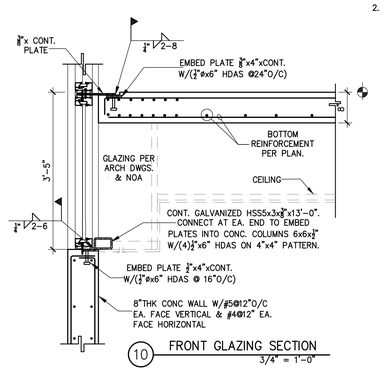

10 FRONT GLAZING SECTION
3/4" = 1'-0"

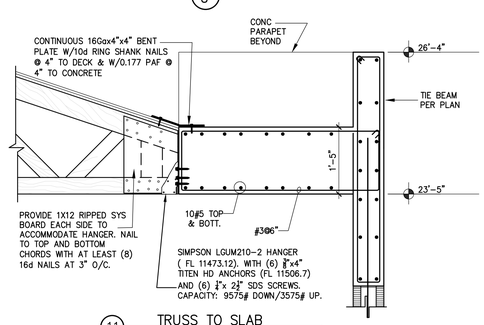

11 TRUSS TO SLAB

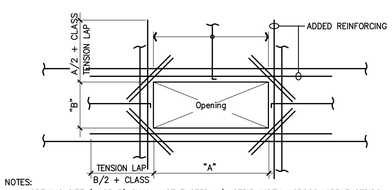

NOTES:
1 – OPENING SIZE (A OR B) SHALL NOT EXCEED 1/4 STRIP WIDTH ACROSS MIDDLE STRIPS OR 1/8 ACROSS COLUMN STRIPS.
2 – OPENINGS LARGER THAN 8" PIPE SLEEVES WILL NOT BE PERMITTED IN AREAS COMMON TO TWO INTERSECTING COLUMN STRIPS.
3 – ADD TOTAL REINFORCING (1/2 TO EACH SIDE) EQUAL TO AMOUNT INTERRUPTED BY OPENING, EXTEND AS SHOWN.
4 – INTERRUPTED TOP BARS SHALL HOOK AT OPENING.
5 – PROVIDE 2#4 T&B 4'0" LONG DIAGONAL AT ALL CORNERS HOOK WHERE 2'0" EXTENSION IS NOT POSSIBLE.

12 FLAT PLATE OPENING DETAIL
N.T.S

REVISION	BY

MARK REARDON R.A. architect
LEED AP BD+C
LIC # AR0017521
stixandstones@bellsouth.net
phone: 786-355-6910

15790 SW 88TH AVE
MIAMI, FL 33157
AR 0017521
786-355-6910

NOTE: ALL DRAWINGS FOR THIS PROJECT ARE TO BE READ IN CONJUNCTION WITH EACH OTHER. THESE INCLUDE, BUT ARE NOT LIMITED TO: ARCHI- TECTURAL, SURVEYING, STRUCTURAL, CIVIL, MECHANICAL, ELECTRICAL, SPECIALTY DRAWINGS, & WRITTEN SPECIFICATIONS

THE G.C. IS TO VERIFY ALL EXISTING SITE CONDITIONS AND THOROUGHLY CHECK ELEVATIONS & DIMENSIONS BEFORE COMMENCING WORK. REPORT TO THE ARCHITECT OR ENGINEER ANY DISCREPANCIES, ERRORS OR CONDITIONS THAT WILL ALTER CONSTRUCTION AS INTENDED BY THESE DRAWINGS. ARCHITECT IS NOT RESPONSIBLE FOR ANY WORK AND/OR MATERIALS FURNISHED ON THE JOB.

FRESNEL EDMUNDO HERNANDEZ LICENSE No. 46618 STATE OF FLORIDA PROFESSIONAL ENGINEER

SEAL:

G F CONSULTING ENGINEERS INC.
13170 SOUTH WEST 128 STREET #204
MIAMI, FLORIDA 33186
PHONE: 305-971-0F1CE (4323)
FAX: 305-971-0F1CE
E-MAIL: GFCEINC@Z.NET
FL COA 9129

Fresnel E Hernandez
Digitally signed by Fresnel E Hernandez
DN: CN=Fresnel E Hernandez, O=G F Consulting Engineers Inc, OU=Structural, E=gfceinc@z.net, C=US
Date: 2023.06.27 14:15:00-04'00'

NEW HOUSE FOR:
5900 LLC
5900 SW 114 TER
PINECREST, FL

DRAWN BY:	FH
DATE:	6/15/23
SCALE:	AS NOTED
SHEET NO.:	S303