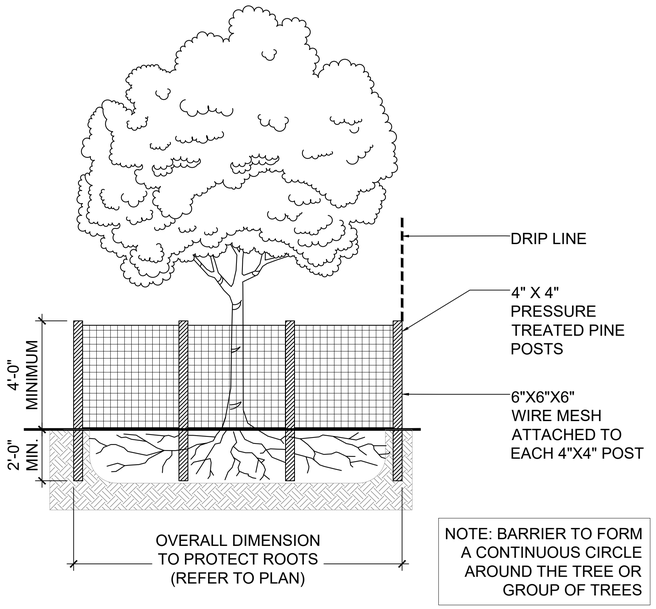

TREE PROTECTION DETAIL

NOT TO SCALE

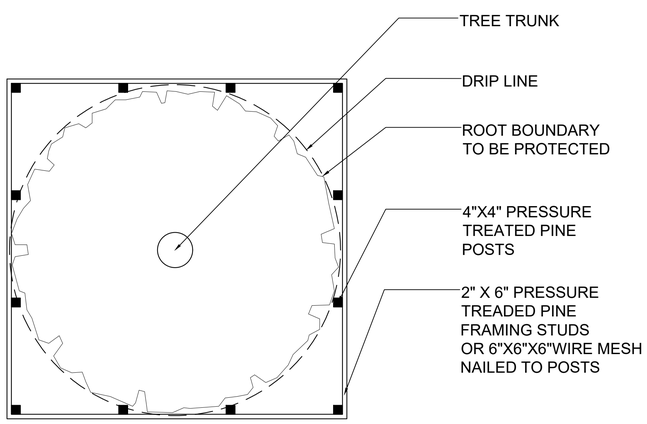

PLAN VIEW

NOT TO SCALE

TREE PROTECTION REQUIREMENTS DURING CONSTRUCTION.

I. PROTECTIVE BARRIERS SHALL BE PLACED AROUND EACH TREE, CLUSTER OF TREES, OR THE EDGE OF A PRESERVATION AREA, FOR TREES LOCATED ON PRIVATE PROPERTY OUTSIDE OF THE PUBLIC RIGHT-OF-WAY, NO LESS THAN SIX FEET (IN RADIUS) FROM THE TRUNK OF ANY PROTECTED TREE CLUSTER, OR PRESERVATION AREA UNLESS A LESSER DISTANCE IS SPECIFIED BY THE ADMINISTRATIVE OFFICIAL. PROTECTIVE BARRIERS SHALL BE A MINIMUM OF FOUR FEET ABOVE GROUND LEVEL AND SHALL BE CONSTRUCTED OF WOOD, PLASTIC OR METAL, AND SHALL REMAIN IN PLACE UNTIL DEVELOPMENT IS COMPLETED AND THE ADMINISTRATIVE OFFICIAL HAS AUTHORIZED THEIR REMOVAL. PROTECTIVE BARRIERS SHALL BE IN PLACE PRIOR TO THE START OF ANY CONSTRUCTION.

II. UNDERSTORY PLANTS WITHIN PROTECTIVE BARRIERS SHALL BE PROTECTED.

III. NO EXCESS OIL, FILL, EQUIPMENT, BUILDING MATERIALS OR BUILDING DEBRIS SHALL BE PLACED WITHIN THE AREAS SURROUNDED BY PROTECTIVE BARRIERS, NOR SHALL THERE BE DISPOSAL OF ANY WASTE MATERIAL SUCH AS PAINTS, OILS, SOLVENTS, ASPHALT, CONCRETE, MORTAR OR ANY OTHER MATERIAL HARMFUL TO TREES OR UNDERSTORY PLANTS WITHIN THE AREAS SURROUNDED BY PROTECTIVE BARRIERS.

IV. TREES SHALL BE BRACED IN SUCH A FASHION AS TO NOT SCAR, PENETRATE, PERFORATE OR OTHERWISE INFLICT DAMAGE TO THE TREE.

V. NATURAL GRADE SHALL BE MAINTAINED WITHIN PROTECTIVE BARRIERS. IN THE EVENT THAT THE NATURAL GRADE OF THE SITE IS CHANGED AS A RESULT OF SITE DEVELOPMENT SUCH THAT THE SAFETY OF THE TREE MAY BE ENDANGERED, TREE WELLS OR RETAINING WALLS ARE REQUIRED.

VI. UNDERGROUND UTILITY LINES SHALL BE PLACED OUTSIDE THE AREAS SURROUNDED BY PROTECTIVE BARRIERS. IF SAID PLACEMENT IS NOT POSSIBLE, DISTURBANCE SHALL BE MINIMIZED BY USING TECHNIQUES SUCH AS TUNNELING OR OVERHEAD UTILITY LINES.

VII. FENCES AND WALLS SHALL BE CONSTRUCTED TO AVOID DISTURBANCE TO ANY PROTECTED TREE. POST HOLES AND TRENCHES LOCATED CLOSE TO TREES SHALL BE DUG BY HAND AND ADJUSTED AS NECESSARY, USING TECHNIQUES SUCH AS DISCONTINUOUS FOOTINGS, TO AVOID DAMAGE TO MAJOR ROOTS.

VIII. ROOT BARRIERS SHALL BE INSTALLED WITH THE PLANTING OF NEW TREES IN INSTANCES WHERE THERE IS A LIKELY POSSIBILITY THAT FUTURE ROOT GROWTH WILL CAUSE DAMAGE TO FOUNDATIONS, DRIVEWAYS, UTILITIES, OR OTHER INFRASTRUCTURE.

TKC LANDSCAPE ARCHITECTURE

TERRA KREATIF & CO LLC
ELIZABETH@TERRAKREATIF.COM
5965 STIRLING RD #1002, DAVIE, FL 33314

NEW PRIVATE RESIDENCE

7725 SW 114TH ST, PINECREST, FL 33156

TREE PROTECTION DETAILS

SEAL:

Diego Vanderbiest

Digitally signed by Diego Vanderbiest
Date: 2023.05.01 11:31:59 -04'00'

DIEGO J. VANDERBIEST
RLA #6667355
6200 SW 80 ST
MIAMI, FLORIDA 33143
(305) 528-4001

SHEET DESCRIPTION:

TREE PROTECTION DETAILS

REVISIONS:

ISSUE:	DATE:
SUBMISSION	05.01.23

SHEET NUMBER: SHEET 1 OF 1

L.101

SCALE: N.T.S