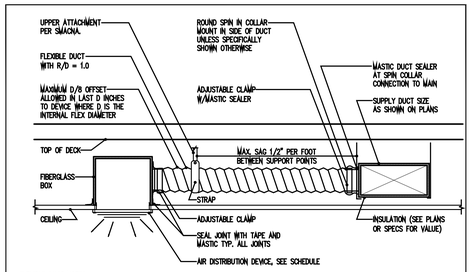

FLEXIBLE DUCT NOTES:

1. FLEXIBLE DUCTS SHALL BE ONE-PIECE AND SHALL NOT BE SPLICED TOGETHER.
2. EXTEND FLEXIBLE DUCT INSULATION TO DUCT/DIFFUSER PANEL INSULATION AND SEAL WITH MASTIC.
3. SUPPORT PER FMC 603.6.6.6, WITH STRAP HANGER WITH HEMMED EDGES PER SMACNA, FIGURE 3-10.
4. FLEXIBLE AIR DUCT SHALL BE FULLY EXTENDED AND NOT COMPRESSED WITH ELBOW RADIUS NOT LESS THAN R/D=1.0. PROVIDE NON METALLIC, INSULATED FLEXIBLE DUCT.

FLEX DUCT DETAIL (1)
N.T.S.

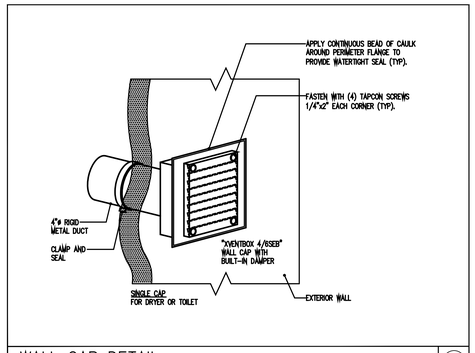

WALL CAP DETAIL (2)
N.T.S.

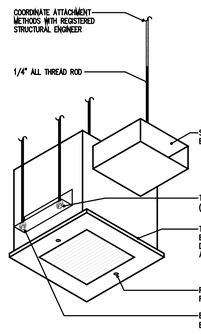

CABINET EXHAUST FAN DETAIL (3)
N.T.S.

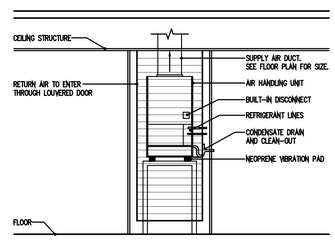

AHU DETAIL (4)
N.T.S.

NOTES:
DETAIL SHOWN FOR REFERENCE ONLY. CODE COMPLIANCE FOR ATTACHMENT PURPOSES SHALL BE DETERMINED AND VERIFIED BY A LICENSED STRUCTURAL ENGINEER PER FBC 2020, SEC. 1620.

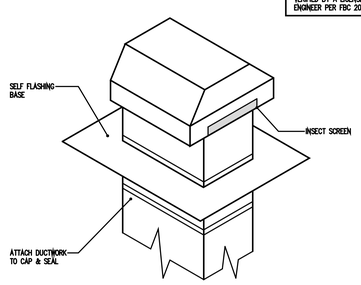

ROOF CAP DETAIL (5)
N.T.S.

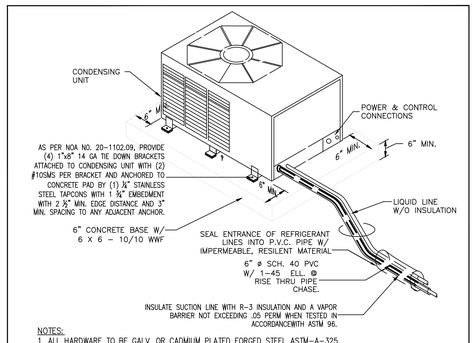

NOTES:
1. ALL HARDWARE TO BE GALV. OR CADMIUM PLATED FORGED STEEL ASTM-A-325.
2. PROVIDE LOOKING TYPE TAMPER RESISTANT CAP ON REFRIGERATION PORTS.
3. CU'S SHALL BE INSTALLED ABOVE FLOOD LEVEL.
4. TIE DOWN/WIND LOAD BASED ON RHEEM CERTIFICATION (ATTACHED)

REFER TO NOA No. 20-1102.09 FOR MORE INFORMATION

CONDENSING UNIT DETAIL (6)
N.T.S.

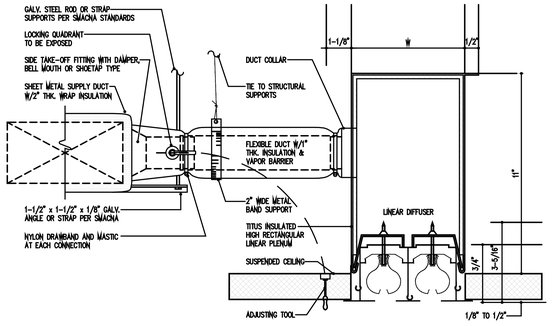

TYPICAL LINEAR DIFFUSER DETAIL (7)
N.T.S.

AC EQUIPMENT SCHEDULE

CONDENSING UNIT

CU TAG	MANUFACTURER & MODEL	NOMINAL TONNAGE	CAP. STAGES	(S)SEER/(P)LV	REFRIG./LBS	LIQ./SUCT.	NO. FANS	FAN FLA(EA)	NO. COMP.	COMP. RLA (EA)	VOLTAGE/PH	MCA/MOCP	WEIGHT (LBS)	L x W x H (IN.)	NOTES	SERVICE AREA
NEW CU-1A	TRANE-MITSUBISHI NTXSKS15A112AA	1.25	1	19.0	R410A/-	SEE MANUAL	1	0.5	1-TWIN ROT.	7.4	208-230/1	10/18	81	12x32x22	SEE BELOW	NEW GUESS HOUSE
NEW CU-1	TRANE 4TTR6024J	2.0	1	16.5	R410A/-	SEE MANUAL	1	0.64	1-CLIMATUFF	10.1	200-230/1	13/20	162	33x30x29	SEE BELOW	NEW GREAT ROOM
NEW CU-2	TRANE 4TTR6024J	2.0	1	16.5	R410A/-	SEE MANUAL	1	0.64	1-CLIMATUFF	10.1	200-230/1	13/20	162	33x30x29	SEE BELOW	EXISTING WEST MASTER BEDROOM
EXISTING CU-2A	TRANE 4TTR6048J	4.0	-	-	R410A/-	SEE MANUAL	1	-	-	-	SEE ELECT.	24/40	-	-	**	EXISTING MAIN HOUSE
EXISTING CU-3	TRANE 4TTR6048J	4.0	-	-	R410A/-	SEE MANUAL	1	-	-	-	SEE ELECT.	24/40	-	-	**	EXISTING MAIN HOUSE
EXISTING CU-4	TRANE 4TTR6036J	2.0	-	-	R410A/-	SEE MANUAL	1	-	-	-	SEE ELECT.	18/30	-	-	**	EXISTING MAIN HOUSE
NEW CU-5	TRANE 4TTR6024J	2.0	1	16.5	R410A/-	SEE MANUAL	1	0.64	1-CLIMATUFF	10.1	200-230/1	13/20	162	33x30x29	SEE BELOW	NEW EAST MASTER BEDROOM

AIR HANDLING UNIT

AHU TAG	MANUFACTURER & MODEL	TOTAL MBH	SENSIBLE MBH	TOTAL CFM	O/A CFM	E.S.P.("W.G.)	ENT. DB/WB	LEAV. DB/WB	ROWS/FPI	FAN HP/FLA	HEATER KW	VOLTAGE/PH	MCA/MOCP	WEIGHT (LBS)	L x W x H (IN.)	NOTES
NEW AHU-1A	TRANE-MITSUBISHI NTXSKS15A112AA	15.0	12.9	525	-	.3	75°/63°	56°/55°	-/-	- / 0.74	18.0 MBH	208-230/1	1/(*)	54	28x39x8	SEE BELOW
NEW AHU-1	TRANE TEM4A0B24	22.8	17.7	800	-	.4	75°/63°	54.4°/52.9°	3/-	1/3 / 2.5	4.8 KW	240/1	28/30	117	22x19x47	SEE BELOW
NEW AHU-2	TRANE TEM4A0B24S1SBA	22.8	17.7	800	-	.4	75°/63°	54.4°/52.9°	3/-	1/3 / 2.5	4.8 KW	240/1	28/30	117	22x19x47	SEE BELOW
EXISTING AHU-2A	TRANE TEM6A0D48H41SBA	48.0	36.0	1600	-	.4	75°/63°	55°/55°	-/-	3/4 / 6.8	SEE ELECT.	SEE ELECT.	SEE ELECT.	-	-	**
EXISTING AHU-3	TRANE TEM6A0D48H41SBA	48.0	36.0	1600	-	.4	75°/63°	55°/55°	-/-	3/4 / 6.8	SEE ELECT.	SEE ELECT.	SEE ELECT.	-	-	**
EXISTING AHU-4	TRANE TEM4A0C42S41SBA	42.0	31.0	1400	-	.4	75°/63°	55°/55°	-/-	1/2 / 4.10	SEE ELECT.	SEE ELECT.	SEE ELECT.	-	-	**
NEW AHU-5	TRANE TEM4A0B24	22.8	17.7	800	-	.4	75°/63°	54.4°/52.9°	3/-	1/3 / 2.5	4.8 KW	240/1	28/30	117	22x19x47	SEE BELOW

NOTES:

1. UNITS RATED PER ARI 210, 240 AND 270, APPROVED EQUAL: AAON, CARRIER, LENNOX, TRANE, YORK.
2. PROVIDE WITH THERMAL EXPANSION VALVES, LIQUID LINE FILTER DRYER AND MULTI-USE SERVICE VALVES.
3. PROVIDE COMPRESSOR WITH CRANKCASE HEATER AND MIN. 5-YEAR WARRANTY.
4. PROVIDE HIGH AND LOW PRESSURE CONTROL AND OVER TEMPERATURE PROTECTION.
5. PROVIDE WEATHERPROOF ELECTRIC CONTROLS AND SINGLE SIDE SERVICE ACCESS.
6. PROVIDE SINGLE POINT POWER ENTRY AND HEAVY DUTY NICKEL-CHROMIUM ELEMENT HEATER.
7. PROVIDE 1" THROWAWAY, MIN. 30% EFF. FILTER AND VIBRATION ISOLATION FOR AHU.
8. PROVIDE FACTORY MOUNTED FUSIBLE DISCONNECT/STARTER FOR A.H.U., COORDINATE PRIOR TO PURCHASING.
9. PROVIDE DISCONNECT FOR C.U. (INSTALLED BY ELECTRICAL). COORDINATE PRIOR TO PURCHASING.
10. PROVIDE FACTORY PROGRAMMABLE THERMOSTAT TO MATCH CAPACITY STAGES.
11. PROVIDE REFRIGERANT LINES SIZE AS RECOMMENDED BY MANUFACTURER, NOT TO EXCEED 150 FT. EQUIV. LENGTH FOR LONGER RUNS COORDINATE WITH MANUFACTURER PRIOR TO PURCHASE OR ANY WORK.
12. PROVIDE CONDENSATE PUMP AS REQUIRED.
13. PROVIDE CORROSION PROTECTION COATING FOR CONDENSER COIL WITH MIN. 5-YEAR WARRANTY COATING BY SURFSIL, LUVATA, THERMOGUARD OR BYGOLD.
14. PROVIDE 3" AUXILIARY DRAIN PAN WITH AUTOMATIC SHUT OFF FLOAT SWITCH OR SENSOR SWITCH IN UNIT'S DRAIN PAN SECONDARY CONNECTION, EQUAL TO "WATER GARD".
15. AS APPLICABLE, MANUFACTURE AND INSTALLATION SHALL COMPLY W/FMC 301.12 FOR WIND RESISTANCE.

(*) INDOOR UNIT POWERED BY OUTDOOR UNIT (**) EXISTING UNITS SHOWN FOR REFERENCE ONLY.

REFRIGERATION LINE NOTE FOR INSTALLATION/RELOCATION:
MECHANICAL CONTRACTOR SHALL COORDINATE ALL LIQUID & SUCTIONS LINES AND ACCESSORIES WITH MANUFACTURER PRIOR TO RELOCATION AND INSTALATION, ALL LINE SIZES SHALL BE APPROVED BY MANUFACTURER PRIOR TO INSTALLATION AND CONTRACTOR SHALL COORDINATE FILED CONDITION WITH LINE RUNS.

COORDINATION NOTE FOR INSTALLATION/RELOCATION:
MECHANICAL CONTRACTOR SHALL COORDINATE ALL ELECTRICAL REQUIREMENTS AND ACCESSORIES WITH ELECTRICAL CONTRACTOR PRIOR TO RELOCATING AND INSTALLATING AND SHALL BRING ANY DISCREPANCIES TO THE ATTENTION OF ENGINEER.

EXHAUST FAN SCHEDULE

SELECTION DATA					FAN DATA			MOTOR DATA				GENERAL DATA				
TAG	SERVICE AREA	MANUF.(*)	MODEL	CONFIG.	CFM	ESP ("WG)	SONES	HP	RPM	DRIVE	VOLTAGE	WEIGHT (LBS)	DIMENSIONS L"x"W"x"H"	OPENING L"x"W"	CONTROL	ACCESSORIES
EF-1	1ST FL BATHROOM	GREENHECK	SP-80-VG	CEILING	50	.37	<0.3	6 WATTS	935	DIRECT	120/1/60	12	11x11x8	*	LIGHT INTERLOCK	SEE BELOW
EF-1A	MATCH EXISTING	MATCH EXISTING	MATCH EXISTING	CEILING	MATCH EXISTING	MATCH EXISTING	MATCH EXISTING	MATCH EXISTING	MATCH EXISTING	DIRECT	120/1/60	MATCH EXISTING	MATCH EXISTING	*	LIGHT INTERLOCK	SEE BELOW

ACCESSORIES NOTES:

1. PROVIDE GRILLE COLOR PER ARCH. SPECS.
2. PROVIDE BACK DRAFT DAMPER.
3. PROVIDE FACTORY MOUNTED DISCONNECT SWITCH AND INTEGRAL THERMAL OVERLOAD PROTECTION, COORDINATE WITH ELECTRICAL CONTRACTOR PRIOR TO ANY PURCHASING.
4. PROVIDE BIRD SCREEN.
5. LOCATE BACK DRAFT DAMPER AT DISCHARGE.
6. SUPPORT FROM STRUCTURE COMPLETE WITH VIBRATION ISOLATORS.
7. PROVIDE ROOFCAP.
8. PROVIDE STEP DOWN TRANSFORMER FOR LIGHT INTERLOCK.

(*) APPROVED EQUAL MANUFACTURER: COOK, TWIN-CITY, ACME.

NOTES:

A. MOTOR STARTERS, FUSED DISCONNECTS AND ALL EQUIPMENT POWER WIRING PROVIDED BY ELEC. CONTRACTOR. MECHANICAL AND ELECTRICAL CONTRACTORS TO COORDINATE PRIOR TO ANY WORK AND PURCHASING.
C. FIELD ADJUST OPENINGS WITH STRUCTURE.
E. COORDINATE WITH ELECTRICAL CONTRACTOR BEFORE BIDDING OR ORDERING ANY EQUIPMENT.
F. SEE PROJECT PLANS AND SPECIFICATIONS FOR OTHER FIELD SUPPLIED ITEMS AND ADDITIONAL INFORMATION.
G. COORDINATE FINISH WITH ARCHITECT/OWNER.

DIFFUSER/GRILLE SCHEDULE

TAG CFM SUPPLY

TAG	MANUF. & MODEL	FACE SIZE	NECK SIZE	MATERIAL	FRAME	FINISH	DAMPER	THROW	NC	CFM RANGE	NOTES
A	PRICE CF/AS/CFP	48" LONG	SEE SCHEDULE	ALUM.	SURFACE	OFF WHITE	NOTE #8	(2) 1" SLOTS	MAX. 30	SEE SCH.	SEE BELOW
B	PRICE CF/AS/CFP	36" LONG	SEE SCHEDULE	ALUM.	SURFACE	OFF WHITE	NOTE #8	(2) 1" SLOTS	MAX. 30	SEE SCH.	SEE BELOW
C	PRICE CF/AS/CFP	24" LONG	SEE SCHEDULE	ALUM.	SURFACE	OFF WHITE	NOTE #8	(1) 1" SLOTS	MAX. 30	SEE SCH.	SEE BELOW

TAG CFM RETURN

TAG	MANUF. & MODEL	FACE SIZE	NECK SIZE	MATERIAL	FRAME	FINISH	DAMPER	THROW	NC	CFM RANGE	NOTES
AA	PRICE CF/RT/CFP	48" LONG	SEE SCHEDULE	ALUM.	SURFACE	OFF WHITE	NOTE #8	(2) 1" SLOTS	MAX. 30	SEE SCH.	SEE BELOW
BB	PRICE 630	24 x 24	22 x 22	ALUM.	SURFACE	OFF WHITE	-	-	MAX. 30	SEE SCH.	SEE BELOW
CC	PRICE 630	24 x 24	22 x 22	ALUM.	SURFACE	OFF WHITE	-	-	MAX. 30	SEE SCH.	SEE BELOW

GENERAL NOTES:

1. PROVIDE SPIN-IN COLLAR WITH VOLUME DAMPER AT TRUNK TO FLEX DUCT CONNECTION (SEE DETAIL).
2. PROVIDE TYPICAL 4-WAY DIFFUSION, 2-WAY OR 3-WAY ONLY WHERE INDICATED ON PLANS.
3. REFER TO ARCHITECT PLANS FOR CEILING TYPE.
4. FINAL COLOR SELECTION SUBJECT TO ARCHITECT APPROVAL.
5. FLEX DUCT SIZE TO BE SAME AS DIFFUSER NECK SIZE.
6. PROVIDE INSULATION ON THE BACK OF DIFFUSER IF IN UNCONDITIONED SPACE.
7. PROVIDE VOLUME CONTROL DAMPERS FOR ALL RETURN GRILLES OR REGISTERS FOR BALANCED AIRFLOW.
8. PROVIDE INTERNAL CABLE CONTROL FOR DIFFUSERS IN HARD CEILINGS.

(*) EQUIVALENT MANUFACTURER: TITUS, KRUEGER, ARGUIDE, T & B, NAILOR.

CONTRACTOR SHALL VERIFY WITH ARCHITECT AND TENANT/OWNER, PRIOR TO ANY PURCHASING OR INSTALLATION, IF A BUILDING STANDARD HAS TO BE FOLLOWED REGARDING A SPECIFIC MODEL OR MANUFACTURER AND SHALL BRING ANY DISCREPANCY TO THE ATTENTION OF ENGINEER.

S/A FLEX SCHEDULE

6ø"	50-125 CFM
8ø"	130-200 CFM
10ø"	205-330 CFM
12ø"	335-450 CFM
14ø"	455-700 CFM

REVISION	BY
1 BDC 05/15/24	

RENOVATION AND ADDITION
FOR:
CHRISTOPHER AND LISA MONTERO
LOCATED AT:
6445 SW 107 STREET
VILLAGE OF PINECREST, FLORIDA

J L D
ARCHITECT
CORPORATION
AA-26003440
8592 s.w. 169th terrace
miami, florida 33157
(305) 310-5992

JOSE L. DIAZ, ARCHITECT
AR-0015547

Julio C. Vidal
Digitally signed by Julio C. Vidal
Date: 2024.08.05 12:00:40-04'00'

THIS DRAWING HAS BEEN ELECTRONICALLY SIGNED AND SEALED BY JULIO C. VIDAL PE., USING A DIGITAL SIGNATURE ON THE DATE ADJACENT TO THE SEAL. PRINTED COPIES OF THIS DOCUMENT ARE NOT CONSIDERED SIGNED AND SEALED AND THE SIGNATURE MUST BE VERIFIED ON ANY ELECTRONIC COPIES.

J. C. VIDAL LICENSE No. 52792 STATE OF FLORIDA PROFESSIONAL ENGINEER

PSI ENGINEERING INC
Engineer of Record: JULIO VIDAL PE
FLA REG # 52792
Project Manager: ROGER PEREZ
10556 NW 26 STREET, SUITE D-202 DORAL, FL 33172 PH: 786-615-7526, FAX: 786-752-3284
CERTIFICATE OF AUTHORIZATION # 30280 email:roger.perez@psiengineeringinc.com

DRAWN	
CHECKED	
DATE	11/14/22
SCALE	
JOB NO.	
SHEET	M-4
	OF SHEETS

COPYRIGHT © 2022 JOSE L. DIAZ, ARCHITECT. The architectural design and detail drawings and specifications as an instrument of service are the property of JOSE L. DIAZ, ARCHITECT. They are not to be used by the architect. Their use for reproduction, construction or distribution is prohibited unless authorized in writing by the architect.