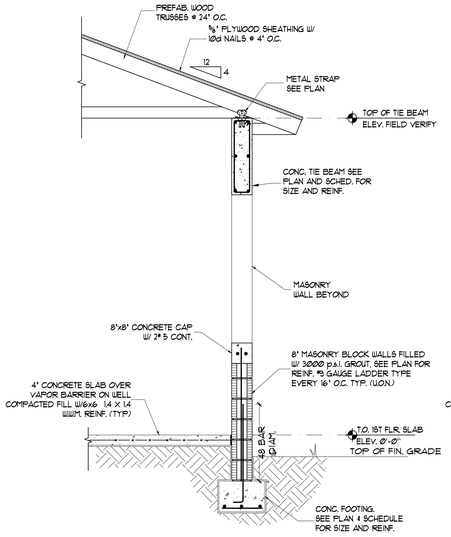

SECTION 1 / S-4.0
SCALE 1/2" = 1'-0"

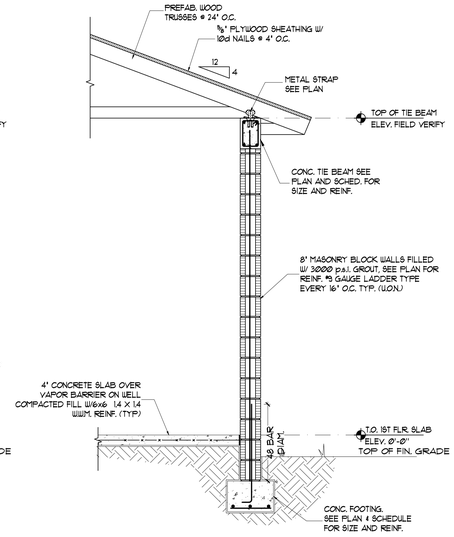

SECTION 2 / S-4.0
SCALE 1/2" = 1'-0"

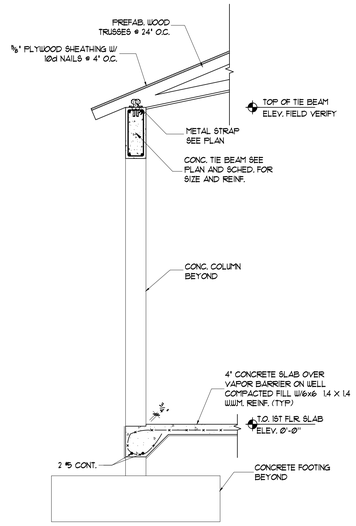

SECTION 3 / S-4.0
SCALE 1/2" = 1'-0"

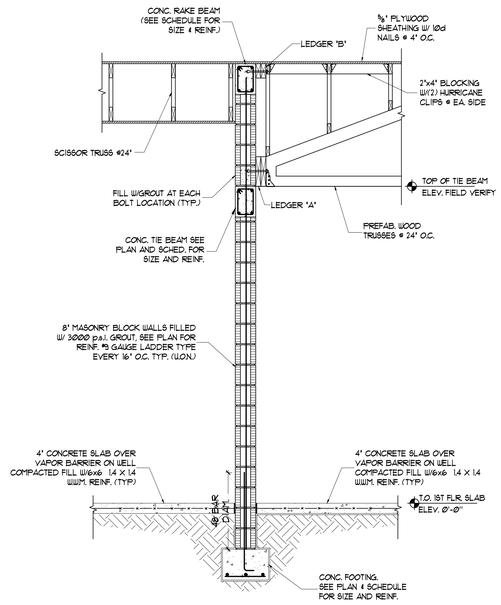

SECTION 4 / S-4.0
SCALE 1/2" = 1'-0"

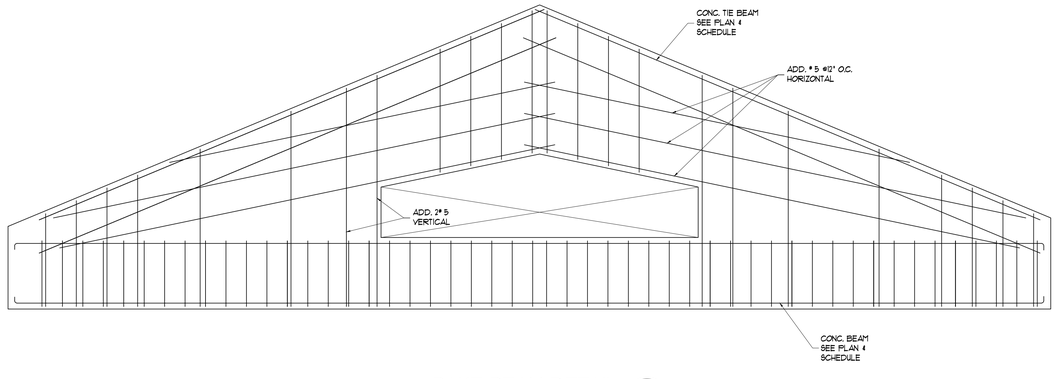

RAKE BEAM DETAIL / A / S-4.0
SCALE 1/2" = 1'-0"

Digitally signed by Eduardo Gonzalez
DN: c=US, st=Florida, l=Miami, o=Eduardo Gonzalez, cn=Eduardo Gonzalez, email=eddyg@aol.com
Date: 2022.12.19 11:43:21 -05'00'

info@divsdesign.com
WWW.diversfiedstructuraldesign.com
305 445 5100 / 305 445 6644 (Fax)
3600 Red Road. Suite 603.
Miramar, Florida, 33025.
J. Eduardo Gonzalez P.E. #24927
STATE OF FL CA-0006188
Project # 2222

NOTICE

ARCHITECT & STRUCTURAL DRAWINGS HAVE TO BE CONSULTED TOGETHER. CALL ARCH/ENGINEER FOR ANY DISCREPANCY BEFORE START OF WORK

"In my professional judgement and to the best of my knowledge and belief, these plans and specifications comply with applicable Building Codes." This document and the information it contains is the exclusive property of Diversified Structural Design, Inc. and may not be reproduced or or used for other purpose other than the specific project for which it was prepared without the explicit consent of Diversified Structural Design, Inc.

REVISION	BY

ADDITION AND RENOVATION
FOR:
LISA AND CHRIS MONTERO
LOCATED AT:
6445 SW 107 STREET
PINECREST, FL. 33156

J L D
ARCHITECT
CORPORATION
AA-26003440

8592 s.w. 169th terrace
miami, florida 33157
(305) 310-5992

JOSE L. DIAZ, ARCHITECT
AR-0015547

DRAWN	
CHECKED	
DATE	
SCALE	
JOB NO.	
SHEET	S-4.0
OF	SHEETS

COPYRIGHT © 2022 JOSE L. DIAZ ARCHITECT. The architectural design and detail drawings for this building, and or overall project, are the legal property of and all rights are reserved by the architect. Any use, reproduction, construction or distribution is prohibited unless authorized in writing by the architect.