NOTE:
1.–FLEXIBLE DUE SHALL BE ONE PIECE & SHALLBE SPLICED TOGETHER.
2.–MAX. SAG 1/2" PER FOOT BETWEN SUPPORT POINTS, AND 5'–0" MAX. OF SUPPORT SPACING.

ML/MLR TYPE	W WIDTH (IN) NUMBER OF SLOTS 1	2	3	4	NOMINAL LENGTH L (IN)	AVAILABLE INLETS/COLLAR (IN)
					24	4, 5, 6, 7, 8, 9, 10
MP–37	2–3/16	3–7/16	4–11/16	5–15/16	36	4, 5, 6, 7, 8, 9, 10
MP–38	2–7/16	3–15/16	5–7/16	6–15/16	48	6, 7, 8, 9, 10, 12
MP–39	2–11/16	4–7/16	6–3/16	7–15/16	60	6, 7, 8, 9, 10, 12

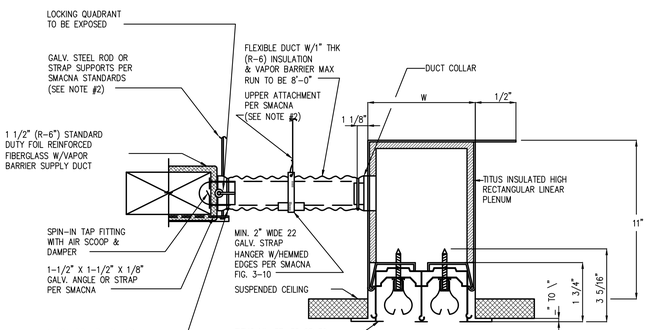

TYPICAL LINEAR DIFFUSER W/ FLEXIBLE DUCT CONNECTION

N.T.S

MITSUBISHI ELECTRIC
COOLING & HEATING
Mr.SLIM. Split-ductless A/C and Heat Pumps

SUBMITTAL DATA: SEZ-KD12NA & SUZ-KA12NA ..... 12,000 BTUH HORIZONTAL-DUCTED HEAT-PUMP SYSTEMS

Job Name:	Location:	Date:
Purchaser:	Engineer:	
Submitted to:	For ☐Reference ☐Approval ☐Construction	
System Designation:	Schedule No.:	

GENERAL FEATURES
- Horizontal-ducted indoor unit for concealed applications
- Ultra thin body: 7-7/8" high
- Built-in drain mechanism for condensate removal; lifts to 21-11/16"
- Air filter is included with indoor unit
- Quiet operation — as low as 23 dBA
- Indoor unit powered from outdoor unit using A-Control
- Automatic fan speed control
- Auto restart following a power outage
- Limited warranty: five years on parts/defects; seven years on compressors

OPTIONAL ACCESSORIES
Indoor Unit
☐ Filter Box with MERV 8 Filters (FBL1-2)
☐ Bottom Return Plate (BRP-2)
Outdoor Unit
☐ Drain Socket (MAC-860DS)
☐ Drain Pan Heater (MAC-640BH-U)
☐ Three-pole Disconnect Switch (TAZ-MS303)
☐ Air Outlet Guide (MAC-856SG)
☐ Mounting Base (DSD-400N)
☐ Mounting Pad (ULTRILITE1)
☐ Wall-mounting Brackets (CWMB1)

Controller Options
☐ Wall-mounted Wired Remote Controller (PAR-21MAA)
☐ M-NET Control Adapter (MAC-399IF)
☐ Remote Temperature Sensor (M21-JKO-307)
☐ Hand-held Wireless Remote Controller (PAR-FL32MA;req.PAR-FA32MA-E)
☐ Wireless Signal Receiver Module PAR-FA32MA (for PAR-FL32MA)
☐ Lockdown Bracket for Hand-held Controller (RCMKP1CB)

Cooling*
Rated Capacity ..... 11,500 Btu/h
Capacity Range ..... 3,800 - 13,300 Btu/h
SEER 16.0
Total Input ..... 920 W
Heating at 47°F*
Rated Capacity ..... 13,600 Btu/h
Capacity Range ..... 4,800 - 16,400 Btu/h
HSPF 10.0
Total Input ..... 1,140 W
Heating at 17°F*
Rated Capacity ..... 9,000 Btu/h
Rated Total Input ..... 920 W
Maximum Capacity ..... 9,000 Btu/h
Maximum Total Input ..... 1,180 W
*Rating Conditions:Cooling-Indoor:80°F(26°C)DB,67°F(19°C)WB,Outdoor:95°F(35°C)DB,75°F(24°C)WB.
(Heating at 47°F) - Indoor: 70°F (21°C)DB, 60°F (16°C) WB, Outdoor: 47°F (8°C) DB, 43°F (6°C) WB.
(Heating at 17°F) - Indoor: 70°F (21°C)DB, 60°F (16°C) WB, Outdoor: 17°F (-8°C) DB, 15°F (-9°C) WB.

Electrical Requirements
Power Supply ..... 208 / 230V, 1-Phase, 60 Hz
Recommended Fuse/Breaker Size ..... 15 A

OPERATING CONDITIONS

		Indoor Intake Air Temp.	Outdoor Intake Air Temp.
Cooling	Maximum	80°F (22°C) DB, 73°F (23°C) WB	115°F (46°C) DB
	Minimum	67°F (19°C) DB, 57°F (14°C) WB	14°F (-10°C) DB
Heating	Maximum	80°F (27°C) DB, 67°F (19°C) WB	75°F (24°C) DB, 65°F (18°C) WB
	Minimum	70°F (21°C) DB, 60°F (16°C) WB	-4°F (-20°C) DB, -5°F (-21°C) WB

© 2011 MITSUBISHI ELECTRIC & ELECTRONICS, INC.

Indoor Unit: SEZ-KD12NA
Outdoor Unit: SUZ-KA12NA

Voltage
Indoor - Outdoor S1-S2 ..... AC 208 / 230V
Indoor - Outdoor S2-S3 ..... DC 12-24V

Indoor Unit
MCA ..... 1 A
Fan Type x Quantity ..... Sirocco Fan x 2
Fan Motor Type ..... Direct-driven DC Brushless Motor
Fan Motor Output ..... 96 W
Fan Motor ..... 0.57 F.L.A.
Airflow (Lo - Med - Hi) ..... 247 - 317 - 388 Dry CFM
222 - 285 - 349 Wet CFM
Air Filter ..... Polypropylene Honeycomb
External Static Pressure ..... 0.02 - 0.06 - 0.14 - 0.20"WG
Sound Pressure Level (Lo - Med - Hi) ..... 23 - 28 - 33 dB(A)

DIMENSIONS	UNIT INCHES / MM
W	39 / 990
D	27-9/16 / 700
H	7-7/8 / 200

Weight ..... 50 lbs. / 22 kg
External Finish ..... Galvanized-steel Sheets
Field Drainpipe Size O.D. ..... 1-1/4" / 32 mm

Outdoor Unit
Compressor ..... DC Inverter-driven
MCA ..... 12 A
MOCP ..... 15 A
Fan Motor ..... 0.50 F.L.A.
Sound Pressure Level
Cooling ..... 49 dB(A)
Heating ..... 51 dB(A)

DIMENSIONS	INCHES / MM
W	31-1/2 / 800
D	11-1/4 / 285
H	21-5/8 / 550

Weight ..... 77 lbs. / 35 kg
External Finish ..... Munsell No. 3Y 7.8 / 1.1

Refrigerant Type R410A
Refrigerant Pipe Size O.D.
Gas Side ..... 3/8" / 9.52 mm
Liquid Side ..... 1/4" / 6.35 mm
Max. Refrigerant Pipe Length ..... 65' / 19 m
Max. Refrigerant Pipe Height Difference ..... 40' / 12 m
Connection Method ..... Flared

410 INVERTER

A/C-1 SCHEDULE INSTALLATION

N.T.S.

MITSUBISHI ELECTRIC
COOLING & HEATING
Mr.SLIM. Split-ductless A/C and Heat Pumps

SUBMITTAL DATA: SEZ-KD09NA & SUZ-KA09NA ..... 9,000 BTUH HORIZONTAL-DUCTED HEAT-PUMP SYSTEMS

Job Name:	Location:	Date:
Purchaser:	Engineer:	
Submitted to:	For ☐Reference ☐Approval ☐Construction	
System Designation:	Schedule No.:	

GENERAL FEATURES
- Horizontal-ducted indoor unit for concealed
- Ultra thin body: 7-7/8" high
- Built-in drain mechanism for condensate removal; lifts to 21-11/16"
- Air filter is included with indoor unit
- Quiet operation — as low as 23 dBA
- Indoor unit powered from outdoor unit using A-Control
- Automatic fan speed control
- Auto restart following a power outage
- Limited warranty: five years on parts/defects; seven years on compressors

OPTIONAL ACCESSORIES
Indoor Unit
☐ Filter Box with MERV 8 Filters (FBL1-1)
☐ Bottom Return Plate (BRP-1)

Outdoor Unit
☐ Drain Socket (MAC-860DS)
☐ Drain Pan Heater (MAC-640BH-U)
☐ Three-pole Disconnect Switch (TAZ-MS303)
☐ Air Outlet Guide (MAC-856SG)
☐ Mounting Base (DSD-400N)
☐ Mounting Pad (ULTRILITE1)
☐ Wall-mounting Brackets (CWMB1)

Controller Options
☐ Wall-mounted Wired Remote Controller (PAR-21MAA)
☐ M-NET Control Adapter (MAC-399IF)
☐ Remote Temperature Sensor (M21-JKO-307)
☐ Hand-held Wireless Remote Controller (PAR-FL32MA; req.PAR-FA32MA-E)
☐ Wireless Signal Receiver Module PAR-FA32MA (for PAR-FL32MA-E)
☐ Lockdown Bracket for Hand-held Controller (RCMKP1CB)

Cooling*
Rated Capacity ..... 8,100 Btu/h
Capacity Range ..... 3,800 - 10,900 Btu/h
SEER 15.0
Total Input ..... 670 W
Heating at 47°F*
Rated Capacity ..... 10,900 Btu/h
Capacity Range ..... 4,800 - 14,100 Btu/h
HSPF 10.0
Total Input ..... 1,020 W
Heating at 17°F*
Rated Capacity ..... 6,700 Btu/h
Rated Total Input ..... 810 W
Maximum Capacity ..... 6,700 Btu/h
Maximum Total Input ..... 1,000 W
*Rating Conditions:Cooling-Indoor:80°F(27°C)DB,67°F(19°C)WB,Outdoor:95°F(35°C)DB, 75°F(24°C)WB.
(Heating at 47°F) - Indoor: 70°F (21°C)DB, 60°F (16°C) WB, Outdoor: 47°F (8°C) DB, 43°F (6°C) WB.
(Heating at 17°F) - Indoor: 70°F (21°C)DB, 60°F (16°C) WB, Outdoor: 17°F (-8°C) DB, 15°F (-9°C) WB.

Electrical Requirements
Power Supply ..... 208 / 230V, 1-Phase, 60 Hz
Recommended Fuse/Breaker Size ..... 15 A

OPERATING CONDITIONS

		Indoor Intake Air Temp.	Outdoor Intake Air Temp.
Cooling	Maximum	90°F (32°C) DB, 73°F (23°C) WB	115°F (46°C) DB
	Minimum	67°F (19°C) DB, 57°F (14°C) WB	14°F (-10°C) DB
Heating	Maximum	80°F (27°C) DB, 67°F (19°C) WB	75°F (24°C) DB, 60°F (18°C) WB
	Minimum	70°F (21°C) DB, 60°F (16°C) WB	-4°F (-20°C) DB, -5°F (-21°C) WB

© 2011 MITSUBISHI ELECTRIC & ELECTRONICS, INC.

Indoor Unit: SEZ-KD09NA
Outdoor Unit: SUZ-KA09NA

Voltage
Indoor - Outdoor S1-S2 ..... AC 208 / 230V
Indoor - Outdoor S2-S3 ..... DC 12-24V

Indoor Unit
MCA ..... 1 A
Fan Type x Quantity ..... Sirocco Fan x 2
Fan Motor Type ..... Direct-driven DC Brushless Motor
Fan Motor Output ..... 96 W
Fan Motor ..... 0.51 F.L.A.
Airflow (Lo - Med - Hi) ..... 194 - 247 - 317 Dry CFM
174 - 222 - 285 Wet CFM
Air Filter ..... Polypropylene Honeycomb
External Static Pressure ..... 0.02 - 0.06 - 0.14 - 0.20"WG
Sound Pressure Level (Lo - Med - Hi) ..... 23 - 26 - 30 dB(A)

DIMENSIONS	UNIT INCHES / MM
W	31-1/8 / 790
D	27-9/16 / 700
H	7-7/8 / 200

Weight ..... 42 lbs. / 19 kg
External Finish ..... Galvanized-steel Sheets
Field Drainpipe Size O.D. ..... 1-1/4" / 32 mm

Outdoor Unit
Compressor ..... DC Inverter-driven
MCA ..... 12 A
MOCP ..... 15 A
Fan Motor ..... 0.50 F.L.A.
Sound Pressure Level
Cooling ..... 46 dB(A)
Heating ..... 50 dB(A)

DIMENSIONS	INCHES / MM
W	31-1/2 / 800
D	11-1/4 / 285
H	21-5/8 / 550

Weight ..... 66 lbs. / 30 kg
External Finish ..... Munsell No. 3Y 7.8 / 1.1
Refrigerant Type R410A
Refrigerant Pipe Size O.D.
Gas Side ..... 3/8" / 9.52 mm
Liquid Side ..... 1/4" / 6.35 mm
Max. Refrigerant Pipe Length ..... 65' / 19 m
Max. Refrigerant Pipe Height Difference ..... 40' / 12 m
Connection Method ..... Flared

410 INVERTER

A/C-6 SCHEDULE INSTALLATION

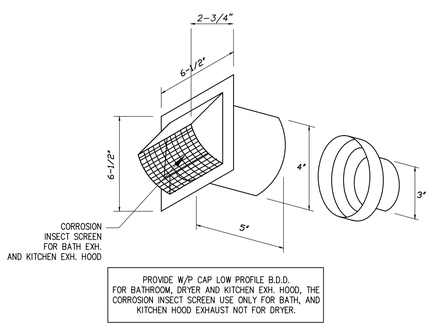

WALL CAP FOR DRYER,KITCHEN EXH HOOD AND BATHROOM EXH.

N.T.S.

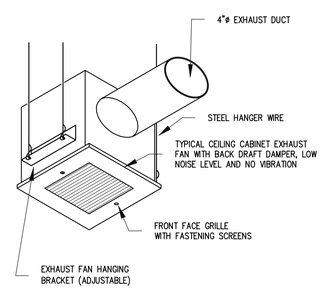

CEILING MOUNTED UTILITY EXHAUST FAN DETAIL

N.T.S.

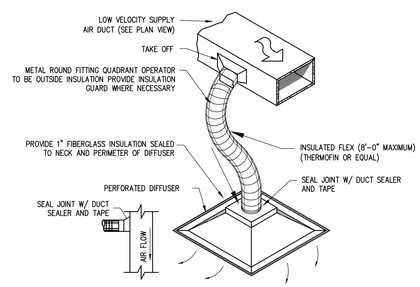

FLEXIBLE DUCT CONNECTION DETAIL

N.T.S.

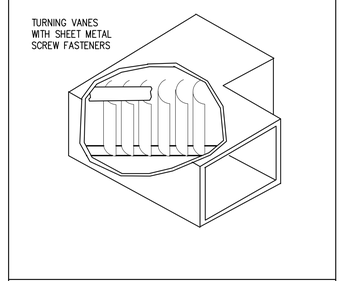

TYPICAL ELBOW

N.T.S.

ORLANDO RANGEL LICENSE No 60225 STATE OF FLORIDA PROFESSIONAL ENGINEER

Digitally signed by ORLANDO RANGEL
DN: c=US, o=Florida, dnQualifier=A01410D000001787FA816670000F008, cn=ORLANDO RANGEL
Date: 2022.06.21 11:34:20 -04'00'

ORLANDO RANGEL
P.E. 60225
9940 S.W. 37th STREET MIAMI, FLORIDA 33165
TEF: 786-547 3517

RAMOS*MARTINEZ*architects

MIAMI
655 W. FLAGLER ST.
SUITE 205
MIAMI, FL 33130

REGISTRATION: *A A 26000528*
WEBSITE: *www.rmarq.com*
TELEPHONE: *305-548-3006*

NEW YORK
11 ERIE STREET
2nd FLOOR
JERSEY CITY, NJ 07302

NEW RESIDENCE
FOR
ELIGES INVESTORS CONSTRUCTION
AT
9841 SW 73rd COURT
PINECREST, FLORIDA 33156

STRUCTURAL ENGINEER:
EASTERN ENGINEERING
3401 NW 82nd AVE. SUITE 370
MIAMI, FLORIDA 33122 305-599-8133

SEAL:

MECHANICAL ENGINEER:
-

CIVIL ENGINEER:

LANDSCAPE ARCHITECT:
-

ARCHITECT:
HUMBERTO RAMOS
AR 0017833

COPYRIGHT - 2021 - **RAMOS***MARTINEZ*architects, inc.
THE DESIGNS, IDEAS AND DETAIL INDICATED OR REPRESENTED BY THIS DRAWING, CREATED AND DEVELOPED FOR USE ON THIS PROJECT, ARE OWNED BY AND THE LEGAL PROPERTY OF RAMOSMARTINEZ architects, Inc. USE, REPRODUCTION, DISTRIBUTION OR ALTERATION IS PROHIBITED WITHOUT WRITTEN AUTHORIZATION BY THE ARCHITECT.

KEY PLAN:

COMM. NO.: *17-117*
NO: REVISION:
DATE:

DATE: *JANUARY, 2022*

DRAWN BY:

CONTENT:

SHEET NUMBER:

M-4